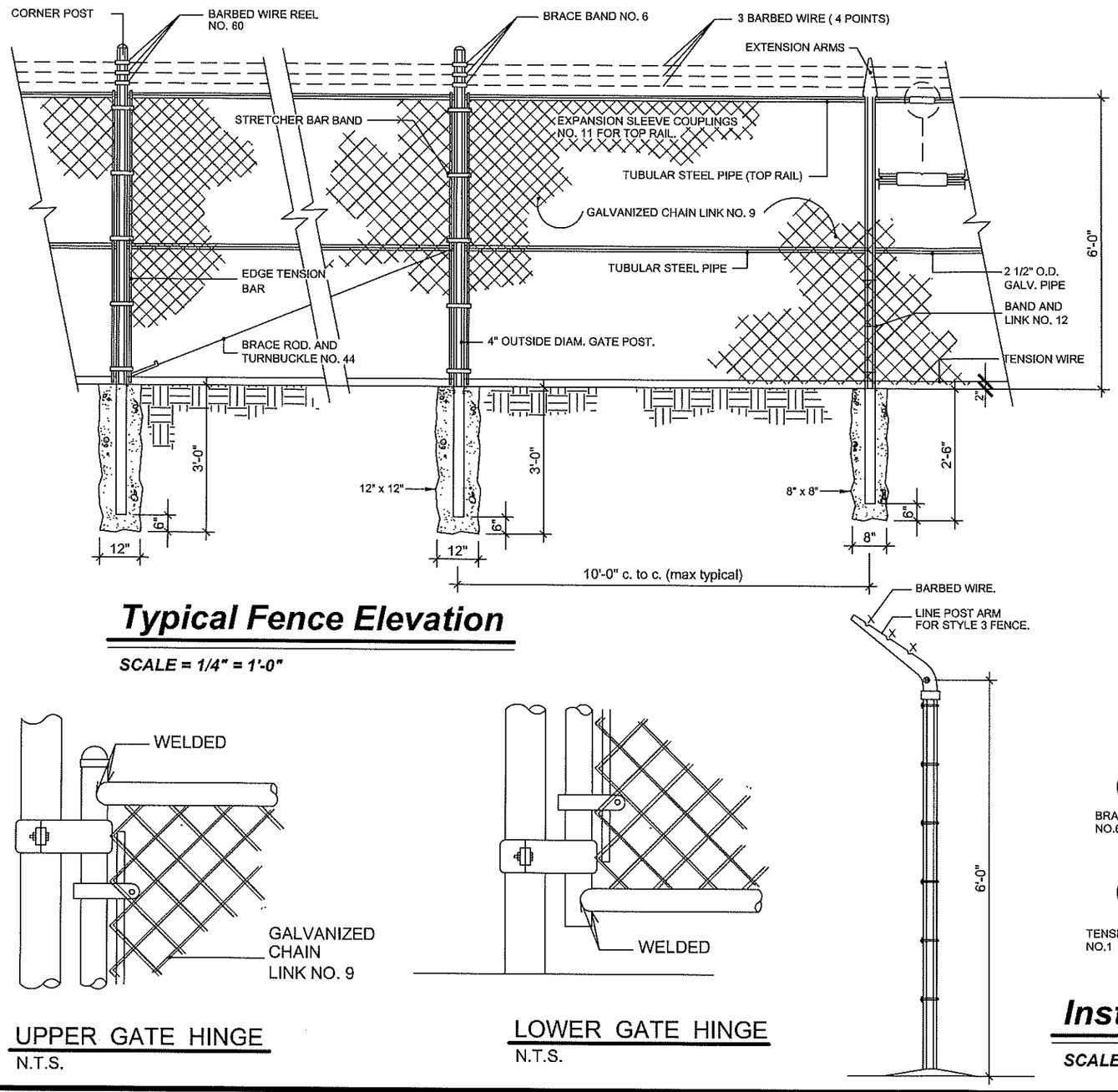

Typical Fence Elevation

SCALE = 1/4" = 1'-0"

NOTES OF CHAIN LINK FENCES

A - CHAIN LINK FENCE - INDUSTRIAL TYPE NO. 423.

B - LINE POSTS 2 1/2" O.D. GALV. - STD. WEIGHT PIPE - 3.65 LBS PER LIN. FT.

C - TOP RAIL 1 5/8" O.D. GALV. - STD. WEIGHT PIPE - 2.27 LBS. PER LIN. FT. (GATES FRAME INDEM).

D - CORNER POST 3" O.D. GALV. - STD. WEIGHT PIPE - 5.79 LBS PER LIN FT.

E - TENSION WRE GA. NO. 7 GALVANIZED.

F - GATE POSTS 4" O.D. GALV. - STD. WEIGHT PIPE - 9.10 LBS. PER LIN. FT.

G - GATE POSTS 6 5/8" GALV. - STD. WEIGHT PIPE - 18.97 LBS. PER LIN. FT.

H - GALVANIZED CHAIN LINK GA. 9 - 2" X 2" - 1.2 OUNCES GALVANIZED.

I - STD. WEIGHT PIPE = SCHEDULE 40 A -120.

J - ALL FITTINGS - HEAVY DUTY.

K - MILL CERTIFICATE SHALL BE SUBMITTED.

UPPER GATE HINGE
N.T.S.

LOWER GATE HINGE
N.T.S.

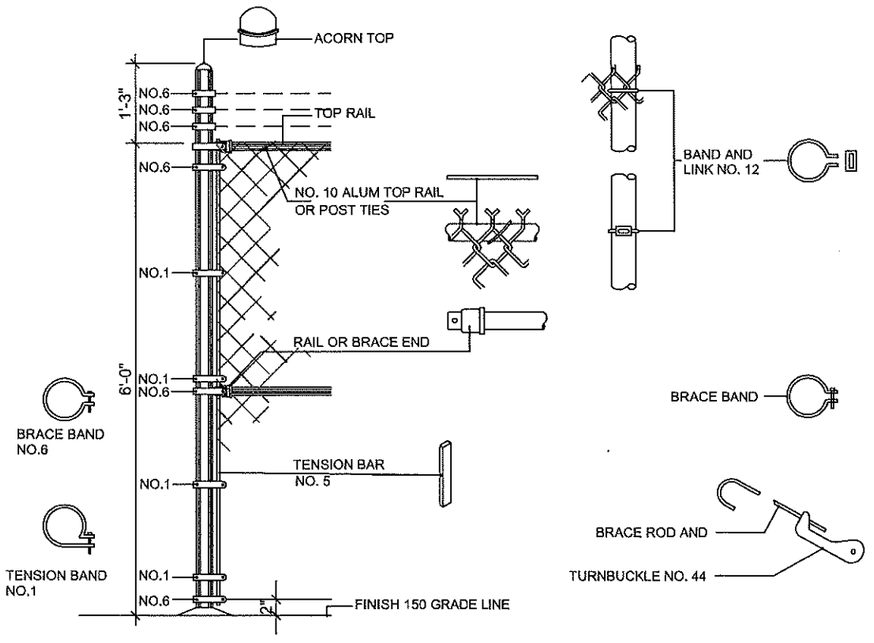

Installation Details For Chain Link Fence & Gates

SCALE = 1/4" = 1'-0"

PRIDCO
COMMONWEALTH OF PUERTO RICO
Puerto Rico Industrial Development Company

PROPERTIES MANAGEMENT OFFICE
SPECIAL SERVICES DIVISION

355 AVE. FRANKLIN D. ROOSEVELT, HATO REY, P.R. 00918
P.O. BOX 362350 SAN JUAN, P.R. 00936-2350
http: //www.pridco.com (787) 758-4747

TYPICAL CHAIN LINK FENCE DETAILS & NOTES

DRAWN BY: M GRACIA L.1974
DATE: 21 / SEPT / 2011
REVISED BY:
DATE:
APPROVED BY:
DATE:

DATE	REVISION	BY
	CAD FILE:	C1.2

SHEET 1
OF 1

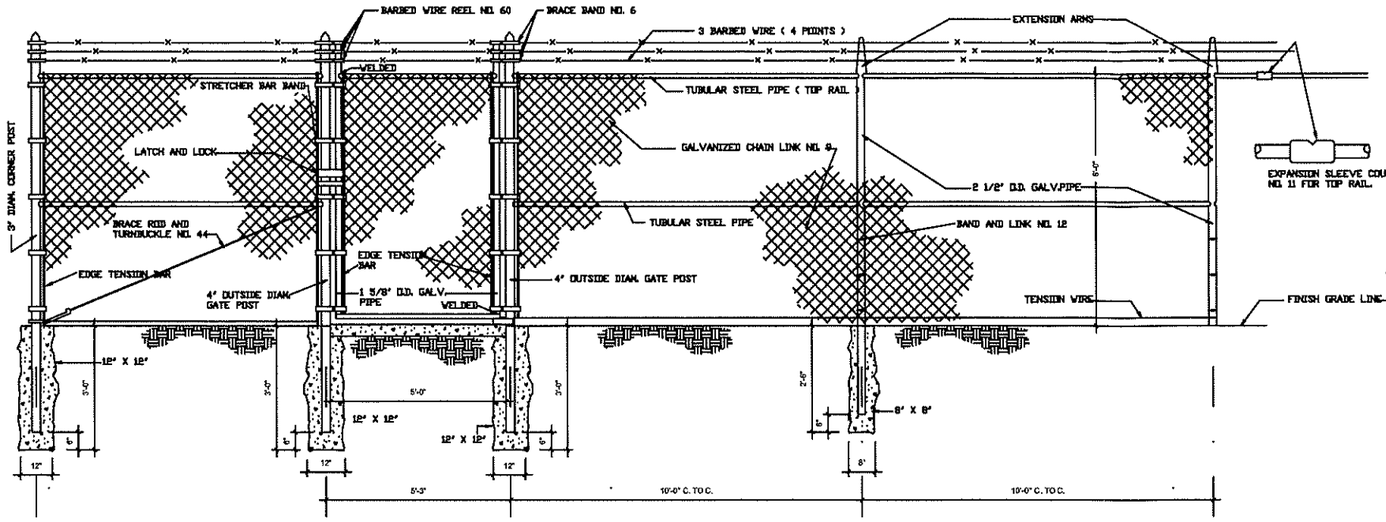

EMPLOYEE'S ENTRANCE GATE

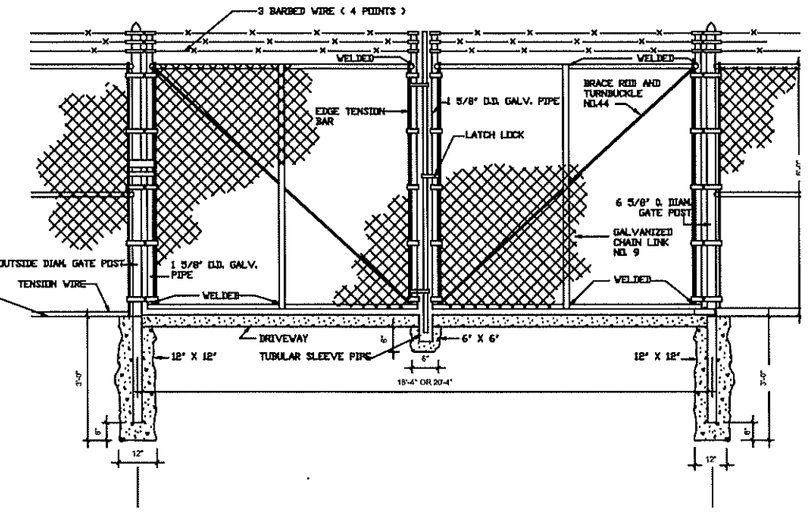

DRIVEWAY GATE DETAILS

NOTES:

1 - CHAIN LINK FENCE - INDUSTRIAL TYPE NO. 423

2 - LINE POSTS 2 1/2" O.D. GALV. - STD. WEIGHT PIPE - 3.65 LBS PER LIN. FT.

3 - TOP RAIL 1 5/8" O.D. GALV. - STD. WEIGHT PIPE - 2.27 LBS. PER LIN. FT. (GATES FRAME IDEM.)

4 - CORNER POST 3" O.D. GALV. - STD. WEIGHT PIPE - 5.79 LBS. PER LIN. FT.

5 - TENSION WIRE GA. NO. 7 GALVANIZED.

6 - GATE POSTS 4" O.D. GALV. - STD. WEIGHT PIPE - 9.10 LBS. PER LIN. FT.

7 - GATE POSTS 6 5/8" GALV. - STD. WEIGHT PIPE - 18.97 LBS. PER LIN. FT.

8 - GALVANIZED CHAIN LINK GA. 9 - 2" X 2" - 1.2 OUNCES GALVANIZED.

9 - STD. WEIGHT PIPE = SCHEDULE 40 A - 120

10 - ALL FITTINGS - HEAVY DUTY.

11 - MILL CERTIFICATE SHALL BE SUBMITTED

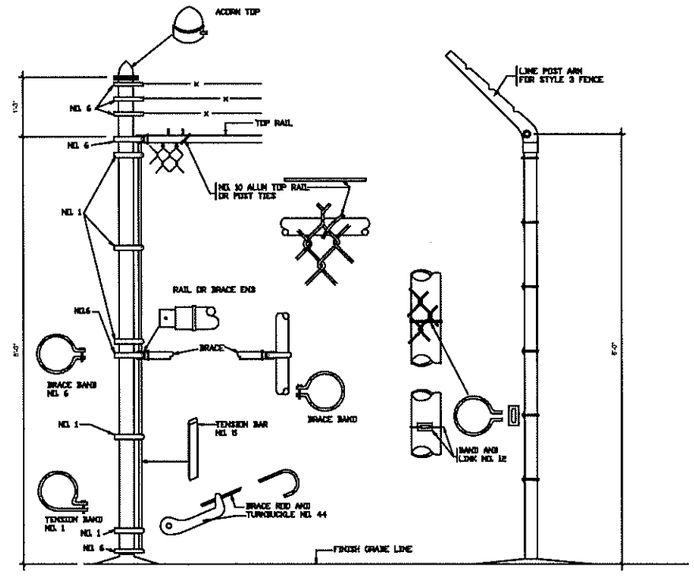

INSTALLATION DETAILS FOR CHAIN LINK FENCE & GATES

DEPARTMENT OF ECONOMIC DEVELOPMENT AND COMMERCE
PRIDCO Puerto Rico Industrial Development Company
GOVERNMENT OF PUERTO RICO

PROPERTIES MANAGEMENT OFFICE
SPECIAL SERVICES DIVISION

355 AVE. FRANKLIN D. ROOSEVELT, HATO REY, P.R. 00918
P.O. BOX 362350 SAN JUAN, P.R. 00936-2350
http: //www.pridco.com (787) 758-4747

TYPICAL CHAIN LINK FENCE GATES DETAILS & NOTES

DRAWN BY: M GRACIA L.1974
DATE: 15 / AGO / 2012
REVISED BY: ING. A. ROSADO
DATE: 17 / AGO / 2012
APPROVED BY:
DATE:

DATE	REVISION	BY

CAD FILE: C6.1

SHEET 1 OF 1