E. MORELL- RIVERA
Architects & Consultants, PSC
PMB #273 P.O. BOX 7891 Guaynabo, Puerto Rico 00970-7891 • (T) 787-783-6552 • (e): architects@emrarchitects.com

Technical Specifications for:

Phase I: Improvements to HVAC System - Improvements to Main mechanical room (basement), New cooling towers and New backup air-cooled chiller (rooftop) at PRIDCO Headquarters, San Juan PR

I hereby certify that these specifications consist of **771** pages.

E. Morell-Rivera Architects & Consultants PSC

INDEX TECHNICAL SPECIFICATIONS

	CONTENTS	NO. OF PAGES
DIVISION 1	**GENERAL REQUIREMENTS**	
01014	Contractor use of Premises	1
01029	Change Order Procedure	1
01040	Project Coordination	1
01045	Cutting and Patching	3
01050	Field Engineering	2
01060	Correction Of Work	1
01085	Applicable Standards	3
01200	Project Meeting	2
01300	Submittals and Substitutions	5
01310	Construction Schedule	7
01380	Construction Photographs	2
01400	Quality Control	2
01410	Testing Laboratory Services	3
01500	Temporary Facilities and Controls	3
01505	Mobilization	2
01560	Environmental Controls	3
01590	Field Office and Sheds	4
01700	Contractor Closeout	3
01710	Cleaning	3
01720	Project Record Documents	4
		54
DIVISION 2	**SITE WORK**	
02070	Selective Demolition	**04**
DIVISION 3	**CONCRETE**	
03100	Concrete Formwork	9
03200	Concrete Reinforcement	6
03300	Cast in Place Concrete	28
03542	Hydraulic-Cement-Based Underlayment	5
03600	Grouts	2
03900	Concrete Restoration and Cleaning	7
03930	Concrete Rehabilitation	19
		76

DIVISION 4	**MASONRY**	
04810	Unit Masonry Assemblies	**20**
DIVISION 5	**METALS**	
05120	Structural Steel	13
05500	Metal Fabrications	21
05511	Metal Stairs	16
05520	Handrails and Railings	02
05521	Pipe and Tube Railings	15
05530	Gratings	17
		84
DIVISION 6	**CARPENTRY & PLASTICS**	
06610	Fiberglass Reinforced Plastics Fabrications	**05**
DIVISION 7	**THERMAL AND MOISTURE PROTECTION**	
07620	Sheet Metal Flashing and Trim	24
078413	Penetration Fire stopping	11
07920	Joint Sealants	13
		48
DIVISION 8	**DOORS AND WINDOWS**	
081113	Hollow Metal Doors and Frames	
08710	Door Hardware	05
089119	Fixed Louvers	
DIVISION 9	**FINISHES**	
09180	Cement Plaster	05
096723	Resinous Epoxy Flooring	08
09900	Painting	09
09911	Exterior Painting	16
09912	Interior Painting	24
		62
DIVISION 10	**SPECIALTIES**	
DIVISION 11	**EQUIPMENT**	
DIVISION 12	**FURNISHINGS**	
DIVISION 13	**SPECIAL CONSTRUCTION**	
DIVISION 14	**CONVEYING EQUIPMENT**	

DIVISION 22	**PLUMBING**	
22 05 11	Common work results for PLUMBING	**30**
DIVISION 23	**HEATING, VENTILATING & AIR CONDITIONING (HVAC)**	
23 05 11	Common work results for HVAC	30
23 05 12	General Motor Requirements for HVAC and Steam Generation	10
23 05 41	Noise and Vibration Control for HVAC Piping and Equipment	08
23 05 93	Testing, Adjusting, and Balancing for HVAC	12
23 07 11	HVAC and Boiler Plant Insulation	29
23 08 00	Commissioning of HVAC Systems	05
23 09 23	Direct-Digital Control System for HVAC	41
23 21 13	Hydronic Piping	37
23 21 23	Hydronic Pumps	09
23 40 02	Water Cooled Chillers (Pro Forma Submittal)	46
23 40 04	Air Cooled Chiller (Pro Forma Submittal)	13
23 40 06	Cooling Towers (Pro Forma Submittal)	35
		310
DIVISION 26	**ELECTRICAL**	
260511	Electrical Works – General	11
260519	Electrical Wires And Cables	05
260526	Grounding	05
260533.13	Electrical Raceway System	08
260543	Underground Distribution Systems	05
260800	Field Acceptance Tests	03
262416	Panel Boards	03
262726	Wiring Devices	05
265100	Lighting	03
		48
	TOTAL:	**771**

Division 1-General Requirements

DIVISION - 1 GENERAL REQUIREMENTS

SECTION 01 14 00 WORK RESTRICTIONS - ACCESS TO SITE / COORDINATION WITH OCCUPANTS / USE OF SITE

PART 1 - GENERAL

1. REQUIREMENT

a. Contractor shall coordinate use of premises for construction purposes with Owner. Because of the nature of project premises, Contractor shall provide Owner with complete minimum surface area requirements for him and his personnel use, including area requirements for:

1. Storage of materials and equipment
2. Staging
3. Employee parking
4. Refuse containers
5. Other required uses

END OF SECTION

DIVISION - 1 GENERAL REQUIREMENTS

SECTION - 01029 CHANGE ORDER PROCEDURES

PART 1 - GENERAL

1. GENERAL

a. This section specifies change order procedures, which form part of the contract and are specified herein.

2. WORK AUTHORIZATION

a. In the event the Owner requires a change to the work, the Owner will issue a written “Work Authorization” for changes to the contract. The authorization will include actual or estimated costs for the change and a statement of responsibility for actual cost if estimated costs are used.

3. CONTRACTOR RESPONSE

a. Contractor shall respond with a formal typewritten "Contract Change Order", in triplicate, referencing authorization number, job name, date, specific items changed and shall indicate total amount of authorization imposed costs. **Backup documentation is to be submitted with all extra costs**. Two or more authorizations may be included on one change order.

END OF SECTION

DIVISION - 1 GENERAL REQUIREMENTS

SECTION - 01040 PROJECT COORDINATION

PART 1 - GENERAL

1. PROJECT COORDINATION

a. Contractor shall be responsible for the general overall coordination of the work required. It is the Contractor's responsibility to see that all of his subcontractors coordinate their work as it relates to the work of other trades.

2. MECHANICAL AND ELECTRICAL COORDINATION

a. Contractor shall coordinate the leaving of openings in the building floors, roofs and walls for supply, return and exhaust ducts, piping and wiring unless otherwise noted or specified herein. It is the Contractor's responsibility to see that all of his subcontractors coordinate their work with regard to openings, which are to be left in floors, roof and partitions for the proper operation of all systems, and that all openings are in correct locations.

3. CUTTING AND PATCHING

a. Except as otherwise specified, each subcontractor shall execute all cutting and patching in his work that may be required by others so that the engagements between the various material will be neat and proper. Cutting of any structural portions of the building shall not be permitted except as approved by the Owner. Each subcontractor shall locate and provide sleeves, suitable to the general contractor, for all holes, chases, openings, or block-outs required for the installation of their work. All such openings shall be straight, true, and of proper size. Excessive cutting will not be permitted, nor shall openings be located to alter the installation of any structural member from that indicated on drawings. After the work has been installed, all openings shall be carefully patched and fitted around as directed and to the satisfaction of the Owner.

END OF SECTION

SECTION 01045
CUTTING AND PATCHING

PART I GENERAL

1.01 DEFINITION

A. "Cutting-and-patching" is hereby defined to include, but is not necessarily limited to, the cutting and patching of nominally completed and previously existing work, in order to accommodate the coordination of work, or the installation of other work, or the uncover other work for access or inspection, or to obtain samples for testing, or for similar purposes; and is defined to excluded integral cutting-and-patching during the manufacturing, fabricating, erecting and installing process for individual units of works.

1.02 RELATED WORK

A. Refer to the mechanical and electrical sections, for additional requirements and limitation on the cutting-and-patching of mechanical and electrical work, respectively. The requirements of this section apply to mechanical and electrical work, unless otherwise indicated.

B. Demolition is recognized as an example of a related-but-separate category of work, which may or may not also require cutting-and-patching as defined in this section.

1.03 QUALITY ASSURANCE

A. Perform all cutting-and-patching in strict accordance with pertinent requirements of these Specifications and, in the event no such requirements are determined, in conformance with the Architect's written direction.

B. Do not cut-and-patch structural work in a manner resulting in a reduction of load-carrying capacity or load/deflection ration.

C. Do not cut-and-patch operational elements and safety-related components in a manner resulting in a reduction of capacities to perform in the manner intended or resulting in decreased operational life, increased maintenance, or decreased safety.

D. Do not cut-and-patch work which is exposed on the exterior or exposed in occupied spaces of the building, in a manner resulting in a reduction of visual qualities or resulting in substantial evidence of the cut-and-patch work, both as judge solely by the Architect. Remove and replace work judge by the Architect to be cut-and-patched in a visually unsatisfactory manner.

1.04 SUBMITTALS

A. Request for Architect's consent:

Prior to cutting which affects structural safety, submit written request to Architect for permission to proceed with cutting.

B. Proposals for Cutting-and-Patching:

1. Where prior approval of cutting-and-patching is required, submit proposal well in advance of time work will be performed, and request approval to proceed. Include description of why cutting-and-patching cannot (reasonably) be avoided, how it will be performed, how structural elements (if any) will be reinforced, products to be used, firms and tradesmen to perform the work, approximate dates of the work, and anticipated results in terms of variations from the work as originally completed (structural, operational, visual and other qualities of significance). Where applicable, include cost proposal, suggested alternatives to the cutting-and-patching procedure proposed, and a description of the circumstances which lead to the need for cutting-and-patching.

2. Approval by Architect to proceed with proposed cutting-and-patching does not waive right to later require complete removal and replacement of work found to be cut-and-patched in an unsatisfactory manner.

PART II PRODUCTS

2.01 MATERIALS

A. Provide materials for cutting-and-patching which will result in equal-or-better work than the work being cut-and-patched, in terms of performance characteristics and including visual effect where applicable. Comply with the requirements, and use materials identical with the original materials where feasible and where recognized that satisfactory results can be produced thereby.

B. For replacement of work removed, use materials which comply with the pertinent Sections of these Specifications.

2.02 PAYMENT FOR COSTS

A. Perform all cutting-and-patching needed to comply with the Contract Documents at no additional cost to the owner.

PART III EXECUTION

3.01 INSPECTION

A. Inspect existing conditions, including elements subject to movement or damage during cutting, excavating, backfilling, and patching. After uncovering the work, inspect conditions affecting installation of new work. If uncovered conditions are not as anticipated, immediately notify the Architects and secure needed directions. Do not proceed in areas of discrepancies until all such discrepancies have been fully resolved.

3.02 PREPARATION

A. Temporary Support:

Provide adequate temporary support for work to be cut, to prevent failure. Do not endanger other work.

B. Protection:

Provide adequate protection of other work during cutting-and-patching, to prevent damage; and provide protection of the work from adverse weather exposure.

3.03 PERFORMANCE

A. Perform all required excavating and backfilling as required under pertinent Sections of these Specifications. Perform cutting and demolition by methods which will prevent damage to other portions of the work and will provide proper surfaces to received installation of repair and new work. Perform fitting and adjustment of products to provide finished installation complying with the specified tolerances and finishes.

B. Employ skilled tradesmen to perform cutting-and-patching. Cut work with saving and grinding tools, not with hammering and chopping tools.

C. Restore exposed finishes of patched areas; and, where necessary extend finish restoration onto retained work adjoining, in a manner which will eliminate evidence of patching.

END OF SECTION

SECTION 01085
APPLICABLE STANDARDS

PART I GENERAL

1.1 DESCRIPTION

1.1.1 Work included:

1.1.1.1 Throughout the Contract Documents, reference is made to codes and standards which establish qualities and types of workmanship and materials, and which establish methods for testing and reporting on the pertinent characteristics.

1.1.1.2 Where materials or workmanship are required by these Contract Documents to meet or exceed the specifically named code or standard, it is the Contractor's responsibility to provide materials and workmanship which meet or exceed the specifically named code or standard.

1.1.1.3 It is also the Contractors' responsibility, when so required by the Contract Documents or by written request from the Architects, to deliver to the Architect all required proof that the materials or workmanship, or both, meet or exceed the requirements of the specifically named code or standard. Such proof shall be in the form requested in writing by the Architect, and generally will be required to be copies of a certified report of tests conducted by a testing agency approved for that purpose by the Architect.

1.1.2 Related work described elsewhere: Specific naming of codes or standards occurs on the Drawings and in other Sections of these Specifications.

1.2 QUALITY ASSURANCE

1.2.1 Familiarity with pertinent codes and standards: In procuring all forms used in this Work, it is the Contractor's, responsibility to verify the detailed requirements of the specifically named codes and standards and to verify that the items procured for use in this Work meet or exceed the specified requirements.

1.2.2 Rejection of non-complying items: The Architect reserves the right to reject items incorporated into the Work which fail to meet the specified minimum requirements. The Architect further reserves the right, and without prejudice to other recourse the Architect may take, to accept non-complying items subject to an adjustment in the Contract Amount as approved by the Architect and the Owner.

1.2.3 Applicable standards listed in these Specifications include, but are not necessarily limited to, standards promulgated by the following agencies or organizations:

(1) AASHTO = American Association of State Highway and Transportation Officials, 341 National Press Building, Washington, D. C. 20004.

(2) ACI = American Concrete Institute, Box 19150, Redford Station, Detroit, Michigan 48219.

(3) AISC = American Institute of Steel Construction, Inc., 1221 Avenue of the Americas, New York, New York 10020.

(4) ANSI = American National Standards Institute (successor to USASU and ASA) 1430 Broadway, New York, New York 10018.

(5) ASTM = American Society for Testing and Materials, 1916 Race Street, Philadelphia, Pennsylvania 19103.

(6) AWS = American Welding Society, Inc., 2501 N.W. 7th Street, Miami, Florida 33125.

(7) AWWA = American Water Works Association, Inc., 6666 West Quincy Avenue, Denver Colorado 80235.

(8) CRSI = Concrete Reinforcing Steel Institute, 228 North LaSalle Street, Chicago, Illinois 60610.

(9) CS = Commercial Standard of NBS, U.S, Department of Commerce, Government Printing Office, Washington, D.C. 20402.

(10) FGMA = Flat Glass Marketing Association, 3310 Harrison, Topeka, Kansas 66611.

(11) NAAMM = The National Association of Architectural Metal Manufacturers, 1033 south Boulevard, Oak Park, Illinois 60302.

(12) NEC = National Electrical Code (see NFPA).

(13) NEMA = National Electrical Manufacturers Association, 155 East 44th Street, New York, New York 10017.

(14) NFPA = National Fire Protection Association, 470 Atlantic Avenue, Boston, Massachusetts 02210.

(15) SDI = Steel Deck Institute, 135 Addison Avenue, Elmhurst, Illinois 60125.

(16) SSPC = Steel Structures Painting Council, 4400 5th Avenue, Pittsburgh, Pennsylvania 15213.

(17) TCA = Tile Council of America, Inc., P.O. Box 326, Princeton, New Jersey 08540.

(18) UL = Underwriter's Laboratories, Inc., 207 East Ohio Street, Chicago, Illinois 60611.

(19) Fed Specs and Fed Standards

Specifications Sales (3FRI), Bldg, 197, Washington Navy Yard, General Services Administration, Washington, D. C. 20407.

(20) MIL-SPECS

Military Specifications, Superintendent of Documents, U.S. Government Printing Office, Washington D.C. 20402.

(21) UBC = Uniform Building Code, International Conference of Building Officials, 5360 South Workman Mill Road, Whittier, California 90601.

END OF SECTION

SECTION 01200
PROJECT MEETINGS

PART I GENERAL

1.1 DESCRIPTION

1.1.1 Work included: To enable orderly review during progress of the Work, and to provide for systematic discussion of problems, the Architect will conduct project meetings throughout the construction period.

1.1.2 Related work described elsewhere: The Contractor's relations with his subcontractors and materials suppliers, and discussions relative thereto, are the Contractor's responsibility and are not part of project meetings content.

1.2 QUALITY ASSURANCE

Persons designated by the Contractor to attend and participate in the project meetings shall have all required authority to commit the Contractor to solutions agreed upon in the project meetings.

1.3 SUBMITTALS

1.3.1 Agenda items: To the maximum extent practicable, advise PRPA Contract Manager at least 24, hours in advance of project meetings regarding all items to be added to the agenda.

1.3.2 Minutes: PRPA Contract Manager will compile minutes of each project meeting and will furnish a PDF file and one (1) copy to the Contractor. The Contractor may make and distribute additional copies as he wishes.

PART II PRODUCTS

(No products are required in this Section.)

PART III EXECUTION

3.1 MEETING SCHEDULE

Except as noted below for Preconstruction Meeting, project meetings will be held weekly. Coordinate as necessary to establish mutually acceptable schedule for meetings.

3.2 MEETING LOCATION

To the maximum extent practicable, meetings will be held at the job site.

3.3 PRE-CONSTRUCTION MEETING (Same day of Notice to Proceed)

3.3.1 Preconstruction meeting will be scheduled within 2 hours after the Owner has issued Notice to Proceed. Provide attendance by authorized representatives of the Contractor and all major subcontractors. The Architect will advise other interested parties and request their attendance.

3.3.2 Minimum agenda: Distribute data on, and discuss:

(1) Organizational arrangement of Contractor's forces and personnel, and those of subcontractors, materials suppliers, and Architect.

(2) Channels and procedures for communications.

(3) Construction schedule, including sequence of critical work.

(4) Contract Documents, including distribution of required copies of original Documents and revisions.

(5) Processing of Shop Drawings and other data submitted to the Architect for review.

(6) Processing of field decisions and Change Orders.

(7) Rules and regulations governing performance of the Work.

(8) Procedures for safety and first aid, security, quality control, housekeeping, and other related matters.

3.4 PROJECT MEETINGS

3.4.1 Attendance: To the maximum extent practicable, assign the same person or persons to represent the Contractor at project meetings throughout progress of the Work. Subcontractors, materials suppliers, and others may be invited to attend those project meetings in which their aspects of the Work are involved.

3.4.2 Minimum agenda:

(1) Review, revise as necessary, and approved minutes of previous meeting.

(2) Review progress of the Work since last meeting, including status of submittals for approval.

(3) Identify problems which impede planned progress.

(4) Develop corrective measures and procedures to regain planned schedule.

(5) Complete other current business.

END OF SECTION

SECTION 01300
SUBMITTALS AND SUBSTITUTIONS

PART I GENERAL

1.3 SUBMITTALS

1.3.1 Submittal schedule: Within 2 hours after award of Contract, submit to the Architect two (2) copies of the schedule described in Article 2.1 of this Section. Refer to Bid Proposal, Attachment B - List of deliverables.

1.3.2 Certificates of Compliance: Upon completion of the Work, and as a condition of its acceptance, submit to the Architect all Certificates of Compliance.

1.3.3 Make all submittals of Shop Drawings, Samples, requests for substitution, and other items, in strict accordance with this Section.

PART II PRODUCTS

2.1 SUBMITTAL SCHEDULE

2.1.1 General: Compile a complete and comprehensive schedule of all submittals anticipated to be made during progress of the Work. Include a list of each type of item for which Contractor's drawings, Shop Drawings, Certificates of Compliance; material samples, guarantees, or other types of submittals are required. Upon approval by the Architect this schedule will become part of the Contract and the Contractor will be required to adhere to the schedule except when specifically otherwise permitted.

2.1.2 Coordination: Coordinate the schedule with all necessary subcontractors and materials suppliers to ensure their understanding of the importance of adhering to the approved schedule and their ability to so adhere. Coordinate as required to ensure the grouping of submittals as described in Paragraph 3.2 below.

2.1.3 Revisions: Revise and update the schedule on a monthly basis as necessary to reflect conditions and sequences. Promptly submit revised schedules to the Architect for review and consent.

2.2 SHOP DRAWINGS AND COORDINATION DRAWINGS

2.2.1 Shop Drawings:

2.2.1.1 Scale and measurements: Make all Shop Drawings accurately to a scale sufficiently large to show all pertinent aspects of the item and its method of connection to the Work.

2.2.1.2 Type of prints required: Submit all Shop Drawings in the form of one sepia transparency of each sheet plus one blue line or black line print of each sheet. Blueprints will not be acceptable.

2.2.1.3 Reproduction of review Shop Drawings: Printing and distribution of review Shop Drawings for the Architect's use will be by the Architect. All review comments of the Architect will be shown on the sepia transparency when it is returned to the Contractor. The Contractor shall make and distribute all copies required for his purposes.

2.3 MANUFACTURER'S LITERATURE

2.3.1 Genera1: Where contents of submitted literature from manufacturers include data not pertinent to the submittal, clearly indicate which portion of the contents is being submitted for review.

2.3.2 Number of copies required: Submit the number of copies which are required to be returned plus two copies which will be retained by the Architect.

2.4 SAMPLES

2.4.1 Accuracy of samples: Samples shall be of the precise article proposed to be furnished.

2.4.2 Number of samples required: Unless otherwise specified, submit all samples in the quantity which is required to be returned plus one which will be retained by the Architect.

2.4.3 Reuse of Samples: In situations specifically so approved by the Architect, the Architect's retained Sample may be used in the construction as one of the installed items.

2.5 COLORS AND PATTERNS

Unless the precise color and pattern is specifically described in the Contract Documents, and whenever a choice of color or pattern is available in a specified product, submit accurate color and pattern charts to the Architect for review arid selection.

2.6 SUBSTITUTIONS

2.6.1 Approval required:

2.6.1.1 The Contract is based on the standards of quality established in the Contract Documents.

2.6.1.2 All products proposed for use, including those specified by required attributes and performance shall require approval by the Architect before being incorporated into the work.

2.6.1.3 Do not substitute materials, equipment, or methods unless such substitution has been specifically approved for this Work by the Architect.

2.6.2 "Or equal":

2.6.2.1 Where the phrase "or equal" or "or equal as approved by the Architect" occurs in the Contract Documents, do not assume that materials, equipment, or methods will be approved as equal unless the item has been specifically approved for this Work by the Architect.

2.6.2.2 The decision of the Architect shall be final.

PART III EXECUTION

3.1 IDENTIFICATION OF SUBMITTALS

3.1.1 General: Consecutively number all submittals. Accompany each submittal with a letter of transmittal containing all pertinent information required for identification and checking of submittals.

3.1.2 Internal identification: On at least the first page of each copy of each submittal, and elsewhere as required for positive identification, clearly indicate the submittal number in which the item was included.

3.1.3 Re-submittals: When material is resubmitted for any reason, transmit under a new letter of transmittal and with a new submittal number.

3.1.4 Submittal log: Maintain an accurate submittal log for the duration of the Contract, showing current status of all submittals at all times. Make the submittal log available for the Architect's review upon request.

3.2 COORDINATION OF SUBMITTALS

3.2.1 General: Prior to submittal for approval, use all means necessary to fully coordinate all material including, but not necessarily limited to:

(1) Determine and verify all interface conditions, catalog numbers, and similar data.

(2) Coordinate with other trades as required.

(3) Clearly indicate all deviations from requirements of the Contract Documents.

3.2.2 Grouping of submittals: Unless otherwise specified, make all submittals in groups containing all associated items to ensure that information is available for checking each item when it is received. Partial submittals may be rejected as not complying with the provisions of the Contract Documents and the Contractor shall be strictly liable for all delays so occasioned.

3.3 TIMING OF SUBMITTALS

3.3.1 General: Make all submittals far enough in advance of scheduled dates for installation to provide all time required for reviews, for securing necessary approvals, for possible revisions and re-submittals, and for placing orders and securing delivery.

3.3.2 Architect's review time: In scheduling, allow at least 10 calendar days for review by the Architect following his receipt of the submittal.

3.3.3 Delays: Delays caused by tardiness in receipt of submittals will not be an acceptable basis for extension of the Contract completion date.

3.4 ARCHITECT'S REVIEW

3.4.1 General: Review by the Architect shall not be construed as a complete check, but only that the general method of construction and detailing is satisfactory. Review shall not relieve the Contractor from responsibility for errors which may exist.

3.4.2 Authority to proceed: The notations "Reviewed, no exceptions noted" or "Reviewed, exceptions noted" authorize the Contractor to proceed with fabrication, purchase, or both, of the items so noted, subject to the revisions, if any, required by the Architect's review comments.

3.4.3 Revisions: Make all revisions required by the Architect. If the Contractor considers any required revision to be a change, he shall so notify the Architect as provided for under "Changes" in the General Conditions. Show each drawing revision by number, date, and subject in a revision block on the drawing. Wake only those revisions directed or approved by the Architect.

3.4.4 Revisions after approval: When a submittal has been reviewed by the Architect, re-submittal for substitution of materials or equipment will not be considered unless accompanied by an acceptable explanation as to why the substitution is necessary.

END OF SECTION

SECTION 01310
CONSTRUCTION SCHEDULE

PART I GENERAL

1.1 DESCRIPTION

1.1.1 Work included: To assure adequate planning and execution of the Work so that the Work is completed within the number of calendar days allowed in the Contract, and to assist the Architect in appraising the reasonableness of the proposed schedule and in evaluating progress of the Work, prepare and maintain the schedules and reports described in this Section.

1.1.2 Definitions:

(1) "Day" used throughout the Contract, unless otherwise stated, means "calendar day".

1.2 QUALITY ASSURANCE

1.2.1 Qualifications of scheduling personnel: Employ a scheduler who is thoroughly trained and experienced in compiling construction schedule data, in analyzing by use of Critical Path Method or PERT, and in preparation and issue of periodic reports as required below.

1.2.2 Reference standards: Perform all data preparation, analysis, charting, and updating in accordance with all recommendations contained in the current edition of "CPM In Construction" manual of Associated General Contractors, or in accordance with other standards approved by the Architect.

1.2.3 Reliance upon approved schedule:

1.2.3.1 The construction schedule as approved by the Architect will be an integral part of the Contract, and will establish interim Contract completion dates for the various activities.

1.2.3.2 Should any activity not be completed within 15 days after the stated scheduled date, the Architect shall have the right to order the Contractor to expedite completion of the activity by whatever means the Architect deems appropriate and necessary, without additional compensation to the Contractor.

1.2.3.3 Should any activity be 30 or more days behind schedule, the Architect shall have to right to perform the activity or have the activity performed by whatever method the Architect deems appropriate.

1.2.3.4 Costs incurred by the Architect in connection with expediting construction activity under this Article shall be reimbursed to the Architect by the Contractors.

1.2.3.5 It is expressly understood and agreed that failure by the Architect to exercise the option to either order the Contractor to expedite an activity or to expedite the activity by other means shall not be considered precedent setting for any other activities.

1.3 SUBMITTALS

1.3.1 General: Comply with the provisions of Section 01300.

1.3.2 Preliminary analysis: Within ten days after receipt of Notice to Proceed, submit one reproducible copy and four prints of a preliminary construction schedule, plus four prints of proposed format for Materials Status Reports, prepared in accordance with Part Three of this Section.

1.3.3 Construction schedule: Within 30 days after receipt of Notice to Proceed, submit one reproducible and four prints of construction schedule prepared in accordance with Part Three of this Section.

1.3.4 Periodic reports:

1.3.4.1 On the first working day of each month following submittal described in Paragraph 1.3.3. above, submit four prints of the construction schedule updated as described in Part Three of this Section.

1.3.4.2 Accompanying each periodic submittal of construction schedule, submit four prints of the Materials Status Reports updated as described in Part Three of this Section.

PART II PRODUCTS

2.1 CONSTRUCTION ANALYSIS

2.1.1 Diagram:

2.1.1.1 Graphically show the order and interdependence of all activities necessary to complete the Work, and the sequence in which each activity is to be accomplished, as planned by the Contractor and his project field superintendent in coordination with all subcontractors whose work is shown on the diagram. Activities shown on the diagram shall include, but are not necessarily limited to:

(1) Project mobilization.

(2) Submittals and approvals of Shop Drawings and Samples.

(3) Procurement of equipment an critical materials.

(4) Fabrication of special material and equipment, and their installation and testing.

(5) Final cleanup.

(6) Final inspection and testing.

(7) All activities by the Architect that affect progress, required dates for completion, or both, for all and for each part of the Work.

2.1.1.2 The detail of information shall be such that duration times of activities shall normally range from one to 15 days. The selection and number of activities shall be subject to the Architect's approval.

2.1.1.3 Show on the diagram, as a minimum for each activity, precedent and following event numbers, description of each activity, cost, and activity duration in calendar days. Submit diagram on a sheet 75 cm (30") high by the width required.

2.1.2 Mathematical analysis:

2.1.2.1 Furnish a mathematical analysis of the diagram by manual or computer-aided means, including a tabulation of each activity. Show the following information as a minimum for each activity:

(1) Preceding and following event numbers.

(2) Activity description.

(3) Estimated duration of activities.

(4) Earliest start date (by calendar date).

(5) Latest start date (by calendar date).

(6) Earliest finish dated (by calendar date).

(7) Latest finish date (by calendar date).

(8) Slack or float (in calendar days).

(9) Monetary value of the activity.

(10) Percentage of activity completed.

(11) Contractor's earnings based on portion of activity completed.

2.1.2.2 The means used in making the mathematical analysis shall be capable of compiling the total value of completed and partially completed activities, and be capable of accepting modifications approved for time and logic adjustment.

2.1.3 Periodic reports:

2.1.3.1 If computer-aided means are used, list the activities in computer printout sorts as follows:

(1) By the preceding event number from lowest to highest, and then in order of the following event number.

(2) By the amount of float, then in order of preceding event numbers, and then in order of succeeding event numbers.

(3) In order of preceding event numbers, and then in order of succeeding event numbers (show the dollar amount and dollars spent to date for each activity).

(4) Other sorts requested by the Architect, for which the Contractor will be reimbursed in accordance with the General Conditions provisions for Architect.

2.1.3.2 If computer-aids are not used, provide equivalent information to the approval of the Architect.

2.2 MATERIALS STATUS REPORTS

2.2.1 Format: The Contractor's standard materials status report form will be acceptable if, in the Architect's judgment, it provides sufficient pertinent data to determine that materials procurement flow is adequate for all needs of the Work.

2.2.2 Content: Show at least the following information:

(1) Item description, listed in accordance with Specifications Section number in which the item is called for.

(2) Purchase Order number and date of issue.

(3) Vendor name.

(4) Date shipped, and shipping means utilized.

(5) Estimated date of arrival at job site.

(6) Actual date of arrival at job site, and receiving report number.

2.2.3 Data processing: Process the data by manual or computer-aided methods, but to a degree of promptness and accuracy assuring complete display of all pertinent current information at date of each periodic report.

PART III EXECUTION

3.1 PRELIMINARY ANALYSIS

3.1.1 Contents:

(1) Show all activities of the Contractor under this Work for the period between receipt of Notice to Proceed and submittal of construction schedule required under Paragraph 1.3.3 above.

(2) Show the Contractor's general approach to remainder of the Work.

(3) Show cost of all activities scheduled for performance before submittal and approval of the construction schedule.

3.1.2 Submittal shall be in accordance with Paragraph 1.3.2 above.

3.2 CONSTRUCTION SCHEDULE

As soon as practicable after receipt of Notice to Proceed, complete the construction analysis described in Articles 2.1 and 2.2 above, in preliminary form. Meet with the Architect, review contents of proposed construction schedule, and make all revisions agreed upon. Submit in accordance with Paragraph 1.3.3 above.

3.3 MATERIAL STATUS REPORTS

As soon as practicable after receipt of Notice to Proceed, meet with the Architect, review contents of proposed Materials Status Reports, and make all revisions to format agreed upon.

3.4 PERIODIC REPORTS

3.4.1 Construction schedule:

3.4.1.1 Contents:

(1) Report actual progress by updating the mathematical analysis.

(2) Note on the summary report, or clearly show on a revised issue of affected portions of the detailed diagram, all revisions causing changes in the detailed program.

(3) Revise the summary report as necessary for clarity.

(4) Show activities or portions of activities completed during the reporting period, and their actual value.

(5) State the percentage of Work actually completed and schedule as of the report date, and the progress along the critical path in terms of days ahead of or behind the allowable dates.

(6) If the Work is behind schedule, also report progress along other paths with negative slack.

(7) Include a narrative report which shows, but is not necessarily limited to:

a. A description of the problem areas, current and anticipated.

b. Delaying factors and their impact.

c. An explanation of corrective actions taken or proposed.

3.4.1.2 Show the date of latest revision. Submit in accordance with the provisions of subparagraph 1.3.4.1 above.

3.4.2 Materials Status Reports:

3.4.2.1 On the letter of transmittal accompanying periodic reports, on an accompanying summary sheet, or by other means acceptable to the Architect, clearly indicate those items the deliveries of which are critically overdue or otherwise hazardous to maintenance of the approved schedule.

3.4.2.2 Submit in accordance with the provisions of subparagraph 1.3.4.2 above.

3.5 REVISIONS

Make only those revisions to approved construction schedule and approved Materials Status Reports as are approved in advance by the Architect.

END OF SECTION

SECTION 01380
CONSTRUCTION PHOTOGRAPHS

PART I GENERAL

1.01 DESCRIPTION OF REQUIREMENTS

A. Definitions: Construction photographs required by this section are intended to provide a visual record of construction progress at regularly scheduled intervals. They provide a means of confirming visually the status of work, insofar as photographed, on the dates recorded on photographs. They are to be used together with other recorded indication of work progress in determining questions which may arise.

1.02 RESPONSABILITIES

A. General: Contractor shall engage a commercial photographer to take color photographs during construction, in the number, times and locations indicated, and to submit prints as indicated.

B. Associated Services: Cooperate with photographer's work at site. Provide auxiliary services as may be reasonably requested, including access and use of temporary facilities including temporary lighting.

1.03 PHOTOGRAPHIC REQUIREMENTS

A. General: Except as additionally required, take 3 sets of 8 project photographs at monthly intervals, coinciding with work cutoff date associated with each monthly payment request. Photographer shall select vantage point for each shot each month so as to best show status of construction and work progress since taking previous photographs.

B. Vantage Points: Comply with Architect's directions from time to time, concerning desired vantage points for shots.

C. Omitted

1.04 SUBMITTALS

A. General: Refer to Division-1 section of "Submittals" for general requirements of submitting photographs. Submit prints of construction photographs, directly to Architect within 5 days of shot (exposure). Architect will distribute to Owner two prints as Owner's permanent record.

B. Photographer shall retain photographic negatives of submitted photographs, for a period of 3 years after date of substantial completion; and prior to end of 3 years period shall fill orders by Architect for extra photographic prints, priced at prevailing commercial prices.

PART II PRODUCTS

2.01 PHOTOGRAPHIC COPIES

A. General: Provide 8" by 10" glossy color prints on single-weight commercial-grade stock, with extra 1/2" wide margin punched for standard 3-ring binder. Place margin on left edge of vertical shots and at top of horizontal shots. Identify each print on back side by mark-up of either an applied label or a rubber stamped impression; provide the following information:

Name/address of photographer
Name of Project
Date of shot (exposure)
Description of vantage point, in terms of location, direction and elevation or story of construction.

PART III EXECUTION

NOT USED

END OF SECTION

SECTION 01400
QUALITY CONTROL

PART I GENERAL

1.01 SURVEYS AND LAYOUT

A. The Contractor shall provide the services of qualified personnel, during the contract period, for layout of lines and elevations of buildings and structures including foundation systems, footings and piers, floor and roof systems, pavements, sidewalks, grading, utilities, and landscaping.

1.02 INSPECTION AND TESTING AGENCIES

A. The Contractor shall pay all costs and arrange for a testing agency to provide on site testing of-soil compaction, concrete and other items as specified herein. The tests shall be fully documented and certified.

B. Individuals performing inspection and testing must be certified by an organization whose certification program is recognized by the jurisdiction involved and is acceptable to the Owner.

1.03 COORDINATION

A. Each subcontractor shall cooperate fully with the inspection and testing required.

B. Subcontractor shall not assume to use the testing by this Section as being adequate. Each subcontractor shall maintain his own quality methods in addition to the required testing.

1.04 INSPECTIONS

A. At least twenty four hours shall be allowed for inspection prior to any test or concrete placement. The inspection will be made after notification that all items have been installed for the test or preparatory for concrete placement. Should the inspection reveal that corrective measures are required or that the work is not complete, and additional twenty four hours will be allowed to complete the inspection after all work has been corrected or completed.

B. Notification shall be given at least twenty four hours in advance of backfilling encasing of any underground utility in order that an inspection may be made of the installation. Failure to provide such notification may require reopening of the trench at the Contractor's expense.

1.05 ACCEPTANCE OF SUBSTRATES

A. Work of the various sections shall not begin until the installing contractor has examined the substrates and has determined that they are acceptable. Do not proceed with the work until unsatisfactory conditions have been corrected in a manner acceptable to the installer. Notice of unsatisfactory conditions shall be given to the Contractor in writing. Proceeding with the work shall indicate acceptance of the substrate by that installer or Contractor.

END OF SECTION

SECTION 01410
TESTING LABORATORY SERVICES

PART I GENERAL

1.1 DESCRIPTION

1.1.1 Work included: Provide all materials, facilities, services, and other items needed and perform all inspecting and testing required under pertinent other Sections of these Specifications.

1.1.2 Related work described elsewhere: Individual requirements for testing are defined in the pertinent other Sections of these Specifications.

1.1.3 Work not included in this section: Inspecting and testing performed by the Architect and by the Owner.

1.2 QUALITY ASSURANCE

1.2.1 Qualifications of testing laboratory: Select a testing laboratory qualified in accordance with ASTM E329 "Recommended Practice for Inspection and Testing Agencies for Concrete and Practice for Inspection and Testing Agencies for Concrete and Steel Used in Construction" and approved by the Architect.

1.2.2 Codes and standards: Testing, when required, shall be in accordance with all pertinent codes and regulations and with the specified standards.

1.2.3 Qualifications of personnel: For actual inspecting and testing, use only personnel who are thoroughly trained and experienced in the necessary skills, completely familiar with the requirements specified, the pertinent portions of the Contract Documents, and the selected standards for inspecting and testing; and who are approved for this purpose by the Architect.

1.3 SUBMITTALS

1.3.1 Proposed testing laboratory: Within 30 days after award of Contract, submit complete data relative to the testing laboratory proposed for this Work. Show all data needed for review.

1.3.2 Proposed testing personnel: Accompanying the data required under Paragraph 1.3.1 above, submit brief biographies of all personnel the Contractor proposes to employ for testing and inspecting under the Contract.

1.3.3 Schedule for inspecting and testing:

1.3.3.1 Accompanying the data required under Paragraph 1.3.1 above, submit the schedule described in Paragraph 2.1 below.

1.3.3.2 Submit proposed revised schedules in adequate time to permit proper rescheduling of the Architect's activities in connection with inspection and tests.

1.4 PRODUCT HANDLING

Promptly process and distribute all required copies of test reports and related instructions to ensure necessary retesting, replacement of materials, or both, as required, and with the least possible delay in progress of the Work.

PART II PRODUCTS

2.1 SCHEDULES FOR INSPECTING AND TESTING

2.1.1 General: Prepare a master schedule of all items to be inspected and all items to be tested. By coordination with the construction schedule, establish tentative dates for each such activity.

2.1.2 Architect's review: Submit this data in preliminary form for the Architect's review. Meet with the Architect as required to arrive at mutually acceptable revisions. Make the agreed upon revisions and submit as required under Paragraph 1.3.3.1 above.

2.1.3 Revisions:

2.1.3.1 Maintain the schedule for testing and inspecting to accurately reflect progress of the Work.

2.1.3.2 Do not decrease the inspecting and testing activity without written permission from the Architect.

2.1.3.3 Submit all proposed schedule revisions as described in subparagraph 1.3.3.2.

2.2 TESTING LABORATORY FACILITIES

Provide all testing laboratory facilities required to satisfactorily perform the testing required under pertinent other Sections of these Specifications and within the increments of time essential to timely completion of the Work.

PART III EXECUTION

3.1 COOPERATION WITH TESTING LABORATORY

Representatives of the testing laboratory shall have access to the Work at all times. Provide facilities for such access in order that the laboratory may properly perform its function.

3.2 CONDUCT OF TESTING

For actual testing, and reporting of tests, use only those personnel and methods approved in advance by the Architect.

3.3 CONDUCT OF INSPECTING

3.3.1 Notification: To permit the Architect to witness inspections where the Architect so desires, notify the Architect not less than 24 hours in advance when inspection will not be performed as scheduled.

3.3.2 Reimbursement of Architect costs: When Architect has dispatched personnel to witness inspecting or testing, and the inspecting or testing has been delayed without proper notification to the Architect, reimburse all Architect's costs arising by virtue of lack of notification.

3.4 ALTERNATIVE INSPECTION PROCEDURE

The Architect shall have the right to require alternative inspection procedure other than those specified when, in the Architect's opinion, such is required to demonstrate compliance with Contract requirements. Costs of inspection will be borne by the Owner if products are found to comply, otherwise costs shall be borne by the Contractor.

3.5 TESTS REPORTS

All test reports shall be signed by the individual so authorized in the testing plan approved by the Architect.

END OF SECTION

SECTION 01500
TEMPORARY FACILITIES AND CONTROLS

PART I GENERAL

1.1 DESCRIPTION

1.1.1 Work Included: Temporary facilities and controls required for this Work include, but are not necessarily limited to:

(1) Temporary utilities such as water, electricity, and telephone.

(2) Field offices and sheds.

(3) Sanitary facilities.

(4) Enclosures such as tarpaulins, barricades, and canopies.

(5) Fencing of the construction area.

(6) Haul roads.

1.1.2 Related work described elsewhere:

(1) Except that all equipment furnished by subcontractors shall comply with all requirements of pertinent safety regulations, the ladders, planks, hoists, and similar items normally furnished by the individual trades in execution of their own portions of the Work are not part of this Section.

(2) Permanent installation and hook-up of the various utility lines are described in the pertinent other Sections of these Specifications.

1.2 PRODUCT HANDLING

Use all means necessary to maintain temporary facilities and controls in proper and safe condition throughout progress of the Work.

1. 3 JOB CONDITIONS

Make all required connections to existing utility systems with minimum disruption to services in the existing utility systems. When disruption of the existing service is required, do not proceed without the Architect's approval and, when required, provide alternate temporary service.

PART II PRODUCTS

2.1 UTILITIES

2.1.1 General: All temporary facilities shall be subject to the Architect's approval.

2.1.2 Water:

2.1.2.1 Furnish and install all necessary temporary water lines and water supply and, upon completion of the Work, remove all such temporary facilities,

2.1.2.2 The contractor will furnish all water needed for construction.

2.1.3 Electricity:

2.1.3.1 Furnish and install all necessary temporary wiring and, upon completion of the Work, remove all such temporary facility.

2.1.3.2 Furnish and install area distribution boxes so located that the individual trades may use 30 m (100') maximum length extension cords to obtain adequate power and artificial lighting at all points where required for the Work, for inspection and for safety.

2.1.3.3 Contractor will furnish all electricity needed for construction.

2.1.5 Telephone: Make all necessary arrangements and pay all costs for operation and installation of telephone service to the contractor's office at the site.

2.1.6 Utilities for testing: Normal quantities of utilities required to make final tests of completely installed permanent systems will be furnished at no cost to the Contractor.

2.2 FIELD OFFICES AND SHEDS

2.2.1 Contractor's facilities:

2.2.1.1 Provide a field office building and sheds adequate in size and accommodation for all Contractor's offices, supply and storage.

2.2.1.2 Within the Contractor's facilities, provide enclosed space adequate for holding weekly project meetings. Furnish with all required tables, chairs, and utilities.

2.2.1.3 The entire facility, including furniture, will remain the property of the Contractor and shall be removed from the site after completion of the Work.

2.2.1.4 Sanitary facilities: Provide temporary sanitary facilities in the quantity required, for use of all personnel. Maintain in a sanitary condition at all times.

2.3 ENCLOSURES

Furnish, install, and maintain for the duration of construction all required scaffolds, tarpaulins, barricades, canopies, warning signs, steps, bridges, platforms, and other temporary construction necessary for proper completion of the Work in compliance with all safety and other regulations.

2.4 PROJECT SIGNS

Allow no signs or advertising of any kind on the job site except as specifically approved in advance by the Architect.

2.5 FENCING OF THE CONSTRUCTION AREA

2.5.1 General: Furnish and install a temporary fence around construction areas on the site.

2.5.2 Construction: The temporary fence shall consist of woven wire mesh not less than 1.82 m (72") in height, complete with metal posts and all required bracing, and with truck and pedestrian gates as required.

2.6 HAUL ROADS

Provide and maintain all required access to the Work from paved areas and other routes, in strict accordance with all regulations governing the Contractor's use of the site.

PART III EXECUTION

3.1 MAINTENANCE AND REMOVAL

Maintain all temporary facilities and controls as long as needed for the safe and proper completion of the Work. Remove all such temporary facilities and controls as rapidly as progress of the Work will permit, or as directed by the Architect.

END OF SECTION

M -110

FIELD OFFICE

SECTION M – 110

Field Office and Sheds

Part 1 - General

1.01. Description

A. Furnish, install and maintain temporary a suitable and waterproof field office for use of PRPA and Resident Engineer during entire construction period.

B. Field offices for use of PRPA and Resident Engineer shall be identified with signs and logos. Trailer for exclusive use of project manager, resident inspector and PRPA engineers during site visits.

C. Furnish, install and maintain storage and works sheds needed for construction.

D. Prior to installation of offices and sheds, coordinate location, access and related facilities with PRPA Architect/Engineer.

E. At completion of works, remove field offices, sheds and their contents.

1.02. Requirements

A. Construction:

1. Provide facilities that are structurally sound, watertight in like new condition and with floor raised above ground.

2. Temperature Transmission Resistance: Provide insulation compatible with occupancy and storage requirements.

3. At Contractor's option, use portable of mobile buildings.

4. Lighting: 50 foot-candles at desk top height.

5. Exterior lighting at entrance door.

6. Size: **40' x 12' Office trailer with two (2) private offices, one (1) conference area and one (1) toilet**

7. Lighting: 50 foot-candles at desk top height.

8. Exterior lighting at entrance door.

9. Automatic mechanical cooling equipment to maintain comfort conditions.

10. Minimum of four (4) 120 volt duplex electric convenience outlets, at least one on each wall. (see plan)

11. Electric distribution panel: Two circuits minimum, 110 volt 60 hertz service.

12. Anchoring System for Mobile or Portable Buildings: Sufficient to withstand hurricane force winds and meeting code.

13. Meeting Area Furnishings:

    a. Conference table and chairs for at least eight (8) person

b. Racks and files for Project Records Documents in, or adjacent to the meeting area.

c. Other Furnishing: Contractor's options.

14. Health Service: Water and Sanitary facilities.

15. Janitor Service: Daily.

16. Internet Connection: Provide and install a DSL internet wireless service account for the period of the project.

17. Computer equipment: Provide the following equipment including installation of software and set up (at the completion of the project, the equipment listed will be returned to the Contractor):

1 ea. **Desktop Computer** (recent technology), DVD/CD Rewritable, with following software installed: Windows latest version, MS Office Professional (latest version) and Adobe Acrobat Professional (latest version), MS Project (latest version)

1 ea. **Photo Quality Color Inkjet Printer** (printer, copier, fax & scanner). Provide ink cartridges as necessary to maintain proper functioning of equipment. Format 11x17 and 8.5 x 11

18. Storage Sheds:

- To meet requirements of various trades.
- Dimensions: Adequate for storage and handling of products.
- Ventilation: Comply with specified and code requirements for products stored.

19. Other Equipment:

2 ea. Computer Desk

2 ea. Desks 30" x 60"

2 ea. Chairs, swivel-desk

2 ea. Chairs straight-arm (visitor's chair)

1 ea. Conference table and chairs for at least eight (8) persons

1 ea. Lateral filing cabinets, 4 drawer, legal size

2 ea. Filing trays, desk type, 5 tier, legal size

2 ea. Wastebaskets

1 ea. Rack, wall, plan, 12-plan capacity

1 ea. Refrigerator

1 ea. Water cooler, electric (necessary 5 gallon reservoir refills)

1 ea. Coffee maker/dispenser, with cups

1 ea. Microwavable oven

As required: lamps, desk, shelves, windows shades and bathroom supplies.

20. Permits: general contractor shall fill and paid required state or federal permits for the temporary installation, occupancy and water / power provision of services of this trailer on job site.

Part 2 – Products

2.01. Materials, Equipment, and Furnishings: New or used, serviceable, adequate for required purpose, and that do not violate applicable codes or regulations.

Part 3 – Execution

3.01. Installation

A. Fill and grade sites for temporary structures as necessary to provide surface drainage.
B. Construct temporary field offices and storage sheds on proper foundations. provide connections for utilities services.
    - Secure portable or mobile buildings, when used, against break-ins and hurricane force winds per code.
    - Provide steps and landings at entrance doors.

3.02. Maintenance and Cleaning

A. Provide periodic maintenance and cleaning for temporary structures, furnishings, equipment and services.

3.03. Removals

A. Remove temporary field offices, contents and services when no longer needed.

B. Remove storage sheds when no longer needed.

C. Remove foundations and debris, grade site to specified elevations and complete remaining site work indicated on Drawings.

End of Section

General Description

- Office Trailers provide temporary or permanent office space for a variety of industries and uses.
- Standard size units 12’ x 40’
- 480 square feet of interior space.

Specs & Features

- Paneled interior walls
- New Vinyl tile
- Gypsum ceiling - 8’ceiling height
- Fluorescent lighting
- Horizontal sliding glass windows
- HVAC System
- Junctions Boxes for Data/Voice connections
- .024 gauge Aluminum siding
- Gutter trim channels
- 36”x80” exterior door w/ lock
- Exterior lighting
- Bathroom







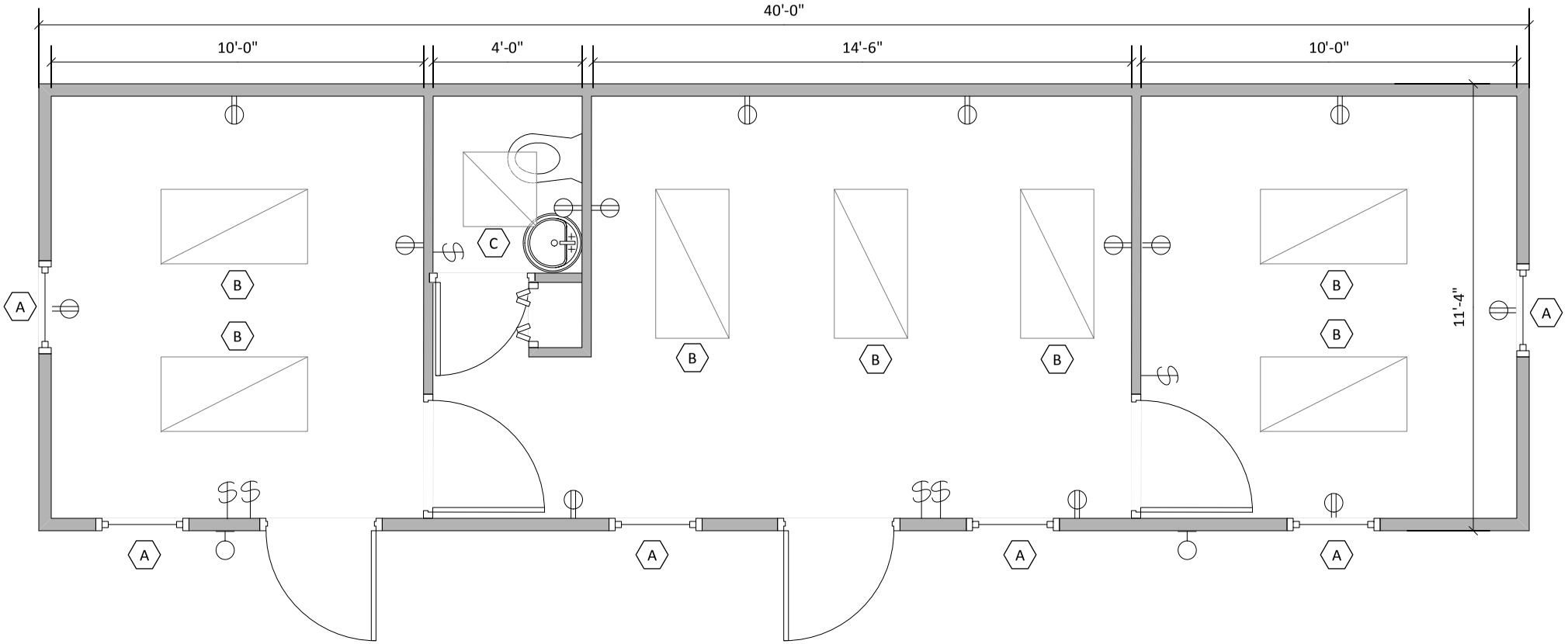

Leyenda:

A 6 Ventanas 30"x60"	Piso Vinyl (linoleo)
B 7 Lámparas 2'x4'	2 Puertas Valiance 36"x80"
	3 A/C Nuevos (2-12,000 BTU; 1-18,000 BTU
C 1 Lámparas 2'x2'	4 Interruptores (2 Individuales; 2 Dobles)
14 Receptáculos 120v	½ Baño (Inodoro, Lavamanos y Closet)
2 Receptáculos 240v	2 Luminarias para Exterior

Proyecto-Auxiliary-Cargo-Ramp-San-Ildefonso-Culebram

Trailer 12'x40'

marzo 15, 2017

SECTION 01505

MOBILIZATION

PART 1 GENERAL

1.01 DESCRIPTION

A. The work specified in this Section shall consist of the preparatory work and operations in mobilizing for beginning work on the Project, including, but not limited to, the following:

(1) The costs of bonds and any required insurance, and any other preconstruction expense necessary for the start of the work, excluding the cost of construction materials;

(2) The costs of operations necessary for the movement of personnel, equipment, supplies and incidentals to the project site; and

(3) The costs for the establishment of temporary offices, shops, buildings, construction identification signs, safety equipment and first aid supplies, sanitary and other facilities, as required by the Contract Documents, and any Federal, State and/or local laws and regulations.

B. The Contractor shall prepare and submit to the Field Representative detailed itemized cost breakdown of this item, at the preconstruction conference.

1.02 The Contractor shall include in the Schedule of Values a line item for "Mobilization".

1.03 Not used.

1.04 PARTIAL PAYMENTS

Partial payments for Mobilization will be made in accordance with the following schedule during the progress of construction on this project.

Percent of Original Contract Amount Earned	Allowable Percent of the Lump Sum Price for Mobilization*
5	25
10	50
25	75
50	100

Partial payments for the item "Mobilization" shall be made in accordance with the above schedule and the sum total of all the partial payments for the item Mobilization will be limited to 3% of the original Contract Amount for the Project. Any remaining amount will be paid upon completion of all work under the Project.

The standard retainage, as specified in General Conditions, will be applied to these allowances. Partial payments made on this item shall in no way act to preclude or limit any of the provisions for partial payments otherwise provided for by the Contract.

2.0 PRODUCTS

2.01 PROJECT IDENTIFICATION SIGNS

A. Provide specified number of project identification sign(s) per Section 01580. The name, address and contact information of the general contractor for the project shall be shown on the sign per Section 01580 and the attached exhibit.

3.0 EXECUTION

3.01 PLACEMENT OF PROJECT IDENTIFICATION SIGNS

A. Place a Project Identification Sign as described in Section 01580, part 1.03, D visible to passing traffic or as directed by Engineer.

END OF SECTION

SECTION 01560
ENVIRONMENTAL CONTROLS

PART I GENERAL

1.01 REQUIREMENTS

A. Provide and maintain environmental control during the life of the contract. Environmental control shall be provided to correct conditions that develop during the construction of permanent environmental protection features or that are required to control pollution that develops during normal construction practices but are not associated with permanent control features incorporated in the project. The Contractor's operations shall comply with all federal and state regulations pertaining to water, air, solid waste and noise pollution.

1.02 DEFINITIONS OF CONTAMINANTS

A. Sediment

Soil and other debris that has been eroded and transported by runoff water.

B. Solid Waste

Rubbish, debris, garbage, and other discarded solid materials resulting from industrial, commercial and agricultural operations and from community activities.

C. Rubbish

A variety of combustible and noncombustible wastes, such as ashes, waste materials that result from construction work, leaves and tree trimmings.

E. Chemical Waste

Includes petroleum products, bituminous materials, slats, acids, alkalies, herbicides, pesticides, organic chemicals and inorganic wastes.

F. Sanitary Wastes

1. Sewage – That which is considered as domestic sanitary sewage.

2. Garbage – Refuse and scraps resulting from preparation, cooking, dispensing and consumption of food.

1.03 PROTECTION OF NATURAL RESOURCES

A. Confine construction activities to areas defined by work description, plans and specifications. Preserve in their existing condition or restore to an equivalent or improved condition the natural resources within the project boundaries.

B. do not remove, cut, deface, injure or destroy trees or shrubs not affected by the work. No ropes cables or guys shall be fastened to or attached to an existing nearby trees for anchorage.

C. Obliterate all signs of temporary construction facilities such as haul roads, work areas, structures, foundation of temporary structures, stockpiles of excess or waste materials and all other vestiges of construction. Regrade, in conformance with surrounding areas temporary roads, parking and similar temporary use areas. Sod all such areas. Seeding shall include topsoil and nutrients to insure a suitable stand of grass.

D. Prevent oily or other hazardous substance from entering the ground, drainage areas or local bodies of water.

1.04 EROSION AND SEDIMENT CONTROL

A. Burn-off ground cover will not be permitted

B. Manage and control borrow areas to prevent sediment from entering nearby streams. Restore the area and replace topsoil. Establish permanent vegetation cover.

C. Immediately protect earthwork brought to final grade. Minimize the duration of exposure of unprotected soils.

D. Temporarily protect erodible soils by mechanical retardation and control of runoff (ie. Diversion ditches, benches, berms) or by the establishment of vegetation and mulch. Slopes too steeps for stabilization by other means shall be hydro seeding mulching anchored in place, covering by anchored metting, sodding or any combination of these to insure effective erosion control.

1.05 CONTROL AND DISPOSAL OF SOLID, CHEMICAL AND SANITARY WASTES

A. Wastes shall be picked up and placed in containers, which are emptied on a regular schedule.

B. Disposition of wastes shall be as follows:

1. Rubish-an debris: Remove from site and dispose in a manner that complies with federal and state requirements.

2. Garbage: If located in an area where garbage scheduled collection is available, place garbage in appropriate containers for pickup and disposal. Otherwise, transport garbage to a disposal area that complies with federal and state requirements.

3. Sanitary or Chemical: Provide chemical toilets with wastes periodically emptied in an approved stage supervised facility.

1.06 DUST CONTROL

A. Dust shall be kept down at all times, including non-working hours, weekends and holidays. Soil at the site, haul roads and other areas disturbed by the Contractor's operations shall be sprinkled or treated with dust suppressors as necessary to control dust. No dry brooming will be permitted. Vacuuming, wet mopping, wet sweeping or wet power brooming shall be used instead. Air blowing will be permitted only for cleaning off non-particulate debris, such as that from reinforcing bars. No sandblasting will be permitted unless the dust there from is confined. Only wet cutting of concrete blocks, concrete, and asphalt will be permitted where concrete mortar and plaster milling is done.

1.07 NOISE CONTROL

Noise shall be kept down at all time. Follow standard working hours schedule. Comply with the noise control requirements of the environmental quality board.

END OF SECTION

SECTION 01590

Field Office and Sheds

Part 1 - General

1.01. Description

A. Furnish, install and maintain temporary two (2) separate field offices for use of Contractor and PRMTA Architect/Engineer during entire construction period.

B. Field offices for use of Contractor and PRMTA Architect/Engineer shall be identified with signs and logos.

C. Furnish, install and maintain storage and works sheds needed for construction.

D. Prior to installation of offices and sheds, coordinate location, access and related facilities with PRMTA Architect/Engineer.

E. At completion of works, remove field offices, sheds and their contents.

1.02. Requirements

A. Construction:

1. Provide facilities that are structurally sound, watertight in like new condition and with floor raised above ground.

2. Temperature Transmission Resistance: Provide insulation compatible with occupancy and storage requirements.

3. At Contractor's option, use portable of mobile buildings.

B. Contractor's Field Office and Facilities:

1. Size: 40' x 12' Office trailer with two (2) private offices and a conference area.

2. Services:

a. Lighting: 50 foot-candles at desk top height.

b. Exterior lighting at entrance door.

c. Automatic mechanical cooling equipment to maintain comfort conditions.

d. Minimum of four (4) 110 volt duplex electric convenience outlets, at least one on each wall.
e. Electric distribution panel: Two circuits minimum, 110 volt 60 hertz service.

f. Convenient access to drinking water and toilet facilities.

g. Telephone: One direct line instrument.

h. Anchoring System for Mobile or Portable Buildings: Sufficient to withstand hurricane force winds and meeting code.

3. Meeting Area Furnishings:

a. Conference table and chairs for at least eight (8) persons.

b. Racks and files for Project Records Documents in, or adjacent to the meeting area.
c. Other Furnishing: Contractor's options.

C. PRMTA Architect/Engineer's Field Office and Facilities:

1. Size: 40' x 12' Office trailer with two (2) private offices and a conference area.

2. Provide and maintain for the duration of the project a suitable and waterproof field office for the use on the PRMTA Architect/Engineer.

3. Provide office equipment, in like new conditions, and services similar to that specified above for the Contractor's field office and, in addition, the following:

a. Telephone Service: One private line or a cellular phone line

b. Health Service: Water and sanitary facilities.

c. Janitor Service: Daily.

d. Internet Connection: Provide and install a dial up service account with access to the internet for the period of the project.

e. Computer equipment: Provide the following equipment including installation of software and set up (at the completion of the project, the equipment listed will be returned to the Contractor):
   1 ea. Desktop Computer Pentium 4 Processor, CD Rewritable, 17" monitor and the following software installed: Windows XP Pro, MS Office XP Professional and Adobe Acrobat 6.0 Pro, MS Project (latest version)
   1 ea. Photo Quality Color Inkjet Printer (printer, copier, fax & scanner).
   1 ea. Digital Camera (5 Mega pixels minimum) with 128 MB internal memory
   1 ea. Digital Camera Carrying Case

Provide paper (bond and photo quality) products, 50 CD-R package and printer inks as required.

f. Other Equipment:

1 ea. Computer Desk
2 ea. Desks 30” x 60”
3 ea. Chairs, swivel-desk
2 ea. Chairs straight-arm (visitor’s chair)
1 ea. Conference table and chairs for at least eight (8) persons
1 ea. Lateral filing cabinets, 4 drawer, legal size
2 ea. Filing trays, desk type, 5 tier, legal size
2 ea. Waste baskets
1 ea. Sharpener, pencil, electric
1 ea. Rack, wall, plan, 12 plan capacity
1 ea. Refrigerator
1 ea. Water cooler, electric
1 ea. Clock, electric
1 ea. Coffee maker/dispenser, with cups
As required: lamps, desk, shelves, windows shades and bathroom supplies.

D. Storage Sheds:

1. To meet requirements of various trades.

2. Dimensions: Adequate for storage and handling of products.

3. Ventilation: Comply with specified and code requirements for products stored.

Part 2 – Products

2.01. Materials, Equipment, Furnishings: New or used, serviceable, adequate for required purpose, and that do not violate applicable codes or regulations.

Part 3 – Execution

3.01. Installation

A. Fill and grade sites for temporary structures as necessary to provide surface drainage.

B. Construct temporary field offices and storage sheds on proper foundations, provide connections for utilities services.

1. Secure portable or mobile buildings, when used, against break-ins and hurricane force winds per code.

2. Provide steps and landings at entrance doors.

3.02. Maintenance and Cleaning

A. Provide periodic maintenance and cleaning for temporary structures, furnishings, equipment and services.

3.03. Removals

A. Remove temporary field offices, contents and services when no longer needed.

B. Remove storage sheds when no longer needed.

C. Remove foundations and debris, grade site to specified elevations and complete remaining site work indicated on Drawings.

End of Section

SECTION 01700
CONTRACT CLOSEOUT

PART I GENERAL

1.01 CLEANING UP

A. The premises and the job site shall be maintained in a reasonable and orderly condition and kept free from accumulations of waste materials and rubbish during the entire construction period. Remove crates, cartons, and other flammable waste materials or trash from the work areas at the end of each working day.

B. Elevator shafts, electrical closets, pipe and duct shafts, chases, furred spaced and similar spaces that are generally unfinished shall be cleaned and left free from rubbish, loose plaster, mortar drippings, extraneous construction materials, dirt and dust.

C. Rubbish shall be lowered by way of chutes, taken down on hoists or lowered in receptacles. Under no circumstances shall any rubbish or waste be dropped or thrown from one level to another within or outside the building.

D. Care shall be taken by workmen not to mark, soil or otherwise, deface finished surfaces. In the event that finished surfaces become defaced, clean and restore such surfaces to their original condition.

E. Clean up immediately upon completion of each trade's work.

F. Clean areas of the building in which painting and finishing work is to be performed just prior to the start of this work and maintain these areas in satisfactory condition for painting and finishing. This cleaning includes the removal of trash and rubbish from these areas, broom cleaning of floors, and removal of any plaster, mortar, dust, and other extraneous materials from finish surfaces.

G. In addition to the cleaning specified above and the mores specific cleaning that may be required in various sections of the Specifications, the building shall be prepared for occupancy by a thorough cleaning throughout, including washing (or cleaning by other approved methods) of surfaces on which dirt or dust has collected and by washing glass on both sides. Leave equipment in an undamaged and clean condition. Re-cleaning will not be required after the work has been inspected and accepted unless later operations of the Contractors make re-cleaning of certain portions necessary.

H. Upon completion of the work, remove temporary buildings and structures, fences, scaffolding, surplus materials and rubbish of every kind from the site of the work.

1.02 DOCUMENTS REQUIRED PRIOR TO FINAL PAYMENT

A. Prior to final payment and before the issuance of a final Certificate for Payment in accordance with the provisions of the General Conditions, file the following papers with the Inspecting Architect:

1. The guarantee required by the General Conditions and any other extended guarantees stated in the technical sections of the Specifications.
2. Consent of surety to release of retainage or final payment as required by the General Conditions.

1.03 OPERATION AND MAINTENCANCE MANUALS (Record and Information Booklet)

A. Furnish three (3) complete sets of manuals containing the manufacturer's apparatus furnished under the Contract and any additional date specifically under the various sections of the Specifications.

B. Arrange the manuals in proper order, indexed and suitably bound. Certify by endorsement thereon that each of the manuals is complete and accurate. Assemble these manuals for all divisions of the work, review them for completeness and submit them to the Architect. Provide suitable transfer cases and deliver the manuals therein, indexed and marked for each division of the work.

1.04 PROJECT RECORD DOCUMENTS

A. As the work progresses keep a complete and accurate record of approved changes from the Contract Documents and the shop drawings indicating the work as actually installed. Changes shall be neatly and correctly shown on the respective portion of the affected document using blackline prints of the drawings affected or the Specifications with appropriate supplementary notes. This record set of "As Built Drawings", shop drawings and Specifications shall be kept at the job site for inspection by the Architect and Owner.

B. The records above shall be arranged in order, in accordance with the various sections of the Specifications and properly indexed. At the completion of the work, certify by endorsement thereof that each of the revised prints of the Drawings and Specifications is complete and accurate. Prior to applications for final payment and as a condition to its approval by the Architect and Owner, deliver the record Drawings and Specifications arranged in proper order, indexed, and endorsed as hereinbefore specified. Provide suitable

transfer cases and deliver the records therein, indexed and marked for each division of the work.

C. No review or receipt of such records by the Architect or Owner shall be a waiver of any deviation from the contract documents or the shop drawings or in any way relieve the Contractor from his responsibility to perform the work in accordance with the Contract Documents and the shop drawings to the extent they are in accordance with the Contract Documents.

1.05 CERTIFICATE OF OCCUPANCY

A. Obtain and pay any fees related to the Certificate of Occupancy (Permiso de Uso) and deliver to the Architect.

END OF SECTION

SECTION 01710
CLEANING

PART I GENERAL

1.1 DESCRIPTION

1.1.1 Work included: Throughout the construction period, maintain the buildings and site in a standard of cleanliness as described in this Section.

1.1.2 Related work described elsewhere: In addition to standards described in this Section, comply with all requirements for cleaning up as described in various other Sections of these Specifications.

1.2 QUALITY ASSURANCE

1.2.1 Inspection: Conduct daily inspection, and more often if necessary, to verify that requirements of cleanliness are being met.

1.2.2 Codes and standards: In addition to the standards described in this Section, comply with all pertinent requirements of governmental agencies having jurisdiction.

PART II PRODUCTS

2.1 CLEANING MATERIALS AND EQUIPMENT

Provide all required personnel, equipment, and materials needed to maintain the specified standard of cleanliness.

2.2 COMPATIBILITY

Use only the cleaning materials and equipment which are compatible with the surface being cleaned, as recommended by the manufacturer of the material or as approved by the Architect.

PART III EXECUTION

3.1 PROGRESS CLEANING

3.1.1 General:

3.1.1.1 Retain all stored items in an orderly arrangement allowing maximum access, not impeding drainage or traffic, and providing the required protection of materials.

3.1.1.2 Do not allow the accumulation of scrap, debris, waste material, and other items not required for construction of this Work.

3.1.1.3 At least twice each month, and more often if necessary, completely remove all scrap, debris, and waste material from the job site.

3.1.1.4 Provide adequate storage for all items awaiting removal from the job site, observing all requirements for fire protection and protection of the ecology.

3.1.2 Site:

3.1.2.1 Daily and more often if necessary, inspect the site and pick up all scrap, debris, and waste material. Remove all such items to the place designated for their storage.

3.1.2.2 Weekly, and more often if necessary, inspect all arrangements of materials stored on the site; restack, tidy, or otherwise service all arrangements to meet the requirements of subparagraph 3.1.1.1 above.

3.1.2.3 Maintain the site in a neat and orderly condition at all times.

3.1.3 Structures:

3.1.3.1 Weekly, and more often if necessary, inspect the structures and pick up all scrap, debris, and waste material. Remove all such items to the place designated for their storage.

3.1.3.2 Weekly, and more often if necessary, sweep all interior spaces clean. "Clean", for the purpose of this subparagraph, shall be interpreted as meaning free from dust and other material capable of being removed by use of reasonable effort and handheld broom.

3.1.3.3 As required preparatory to installation of succeeding materials, clean the structures or pertinent portions thereof to the degree of cleanliness recommended by the manufacturer of the succeeding material, using all equipment and materials required to achieve the required cleanliness.

3.1.3.4 Following the installation of finish floor materials, clean the finish floor daily (and more often if necessary) at all times while work is being performed in the space in which finish materials have been installed. "Clean", for the purpose of this subparagraph, shall be interpreted as meaning free from all foreign material which, in the opinion of the Architect, may be injurious to the finish floor material.

3.2 FINAL CLEANING

3.2.1 Definition: Except as otherwise specifically provided, "clean" (for the purpose of this Article) shall be interpreted as meaning the level of cleanliness generally provided by skilled cleaners using commercial quality building maintenance equipment and materials.

3.2.2 General: Prior to completion of the Work, remove from the job site all tools, surplus materials, equipment, scrap, debris, and waste. Conduct final progress cleaning as described in Article 3.1 above.

3.2.3 Site: Unless otherwise specifically directed by the Architect, broom clean all paved areas on the site and all public paved areas directly adjacent to the site. Completely remove all resultant debris.

3.2.4 Structures:

3.2.4.1 Exterior: Visually inspect all exterior surfaces and remove all traces of soil, waste material, smudges, and other foreign matter. Remove all traces of splashed materials from adjacent surfaces. If necessary to achieve a uniform degree of exterior cleanliness, hose down the exterior of the structure. In the event of stubborn stains not removable with water, the Architect may require light sandblasting or other cleaning at no additional cost to the Owner.

3.2.4.2 Interior: Visually inspect all interior surfaces and remove all traces of soil, waste material, smudges, and other foreign matter. Remove all traces of splashed materials from adjacent surfaces. Remove all paint droppings, spots, stains, and dirt from finished surfaces. Use only the specified cleaning materials and equipment.

3.2.4.3 Glass: Clean all glass inside and outside.

3.2.4.4 Polished surfaces: To all surfaces requiring the routine application of buffed polish, apply the polish recommended by the manufacturer of the material being polished.

3.2.5 Timing: Schedule final cleaning as approved by the Architect to enable the Owner to accept a completely clean project.

3.3 CLEANING DURING OWNER'S OCCUPANCY

Should the Owner occupy the Work or any portion thereof prior to its completion by the Contractor and acceptance by the Owner, responsibilities for interim and final cleaning of the occupied spaces shall be as determined by the Architect in accordance with the General Conditions of the Contract.

END OF SECTION

SECTION 01720
PROJECT RECORD DOCUMENTS

PART I GENERAL WORK INCLUDED

A. Throughout progress of the work of this Contract, maintain an accurate record of all changes in the Contract Documents, as described in this Section.

B. Upon completion of the work of this Contract, transfer the recorded changes to a set of Record Documents, as described in this Section.

1.02 RELATED WORK DESCRIBED ELSEWHERE

Section 01300 submittals.

1.03 QUALITY ASSURANCE

A. Delegate the responsibility for maintenance of Record Documents to one person on the Contractor's staff as approved in advance by the Architect.

B. Thoroughly coordinate all changes within the Record Documents, making adequate and proper entries on each page of Specifications and each sheet of drawings and other documents where such entry is required to properly show the change. Accuracy of records shall be such that future searches for items shown in the Contract Documents may reasonably rely on information obtained from the approved Record Documents.

C. Make all entries within 24 hours after receipt of information.

1.04 SUBMITTALS

A. The supervisory Architect's approval of the current status of Record Documents will be a prerequisite to the Architect's approval of requests for progress payment and request for final payment under the Contract.

B. Prior to submitting each request for progress payment, secure the Architect's approval of the Record Documents as currently maintained.

C. Prior to submitting request for final payment, submit the final Record Documents to the Architect and secure his approval.

1.05 PRODUCT HANDLING

A. Use all means necessary to maintain the job set of Record Documents completely protected from deterioration and from loss and damage until completion of the work and transfer of the recorded data to the final Record Documents. In the event of loss of recorded data, use all means necessary to secure the data to the Architect's approval; such means shall include, if necessary in the opinion of the Architect, removal and replacement of concealing materials and, in such case, all replacements shall be to the standards originally specified in the Contract Documents.

PART II PRODUCTS

2.01 RECORD DOCUMENTS

A. Promptly following award of Contract, secure from the Architect one complete set of all Documents comprising the Contract. Pay the nominal fee per set as determined by the Architect.

B. At a time near the completion of the work, secure from the Architect one complete set of sepia transparencies of all drawings included in the Contract. Pay the nominal fee per set as determined by the Architect.

PART III EXECUTION

3.01 MAINTENANCE OF JOB SET

A. Immediately upon receipt of the job set described above, identify each of the Documents with the title "RECORD DOCUMENTS - JOB SET"

B. Preservation:

1. Considering the Contract completion time, the probable number of occasions upon which the job set must be taken out for new entries and for examinations upon which the job set must be taken out for new entries and for examinations, and the conditions under which these activities will be performed, devise a suitable method for protecting the job set to the approval of the Architect.

2. Do not use the job set for any purpose except entry of new data and for review by the Architect, until start of transfer of data to final Record Documents.

3. Maintain the job set at the site of work as that site is designated by the Architect.

3.02 ENTRIES ON THE JOB SET

A. Using an erasable colored pencils (not ink or indelible pencil); clearly describe the change by note and by graphic line, as required. Date all entries. Call attention to the entry by a "cloud" around the area or areas affected. In the event of overlapping changes, different colors may be used for each of the changes.

B. Where changes are caused by directives issued by the Architect, clearly indicate the change by note in ink, colored pencil, or rubber stamp.

C. Where changes are caused by Contractor-originated proposals approved by the Architect, including inadvertent errors by the Contractor which have been accepted by the Architect, clearly indicate the change by note in erasable colored pencil.

3.03 CONVERSION OF SCHEMATIC LAYOUTS

A. In most cases on the drawings, arrangement of conduits and circuits, piping, ducts, and other similar items, is shown schematically and is not intended to portray precise physical layout. Final physical arrangement is as determined by the Contractor, subject to the Architect's approval. However, design of future modifications of the facility may require accurate information as to the final physical arrangement of items which are shown only schematically on the drawings.

B. Show on the job set of Record Drawings, by dimension accurate to within 25 mm (1"), the centerline of each run of items such as is described above. Clearly identify the item by accurate note such as "cast iron drain", "galv. water", etc. Show, by symbol or note, the vertical location of the item ("under slab", "in ceiling plenum", "exposed", etc."). Make all identification sufficiently descriptive that it may be related reliably to the Specifications.

C. The Architect may waive the requirements for conversion of schematic data where, in the Architect's judgment, "such conversion serves no beneficial purpose. However, do not rely upon waivers being issued except as specifically issued in writing by the Architect.

3.04 ACCURACY OF ENTRIES

A. Use all means necessary, including the proper tools for measurement, to determine actual locations of the installed items.

3.05 FINAL RECORD DOCUMENTS

A. The purpose of the final Record Documents is to provide factual information regarding all aspects of the work, both concealed and visible, to enable future modification of design to proceed without lengthy and expensive site measurement, investigation, and examination.

B. Following receipt of the sepia transparencies described above, and prior to start of transfer of recorded data thereto, secure a review by the Architect of all recorded data. Make all required revisions.

C. Carefully transfer all change data shown on the Job set of Record Drawings to the corresponding sepias, coordinating the changes as required, and clearly indicating at each affected detail and other drawing the full description of all changes made during construction and the actual location of items described above. Call attention to each entry by drawing a "cloud" around the area or areas affected. Make all change entries on the sepias neatly, consistently, and in ink or crisp black pencil.

D. Submit the completed total set of Record Documents to the Architect. Participate in review meeting or meetings as required by the Architect, make all required changes in the Record Documents, and promptly deliver the final Record Documents to the Architect.

3.06 CHANGES SUBSEQUENT TO ACCEPTANCE

A. The Contractor shall have no responsibility for recording changes in the work subsequent to acceptance of the work by the Owner, except for changes resulting from replacements, repairs, and alterations made by the Contractor as part of his guarantee.

END OF SECTION

Division 2-Site Work

SECTION 02070
SELECTIVE DEMOLITION

PART I GENERAL

RELATED DOCUMENTS

Drawings and general provisions of Contract, including General and Supplementary Conditions and Divisions 1 Specification Sections, apply to this Section.

SUMMARY

This Section requires the selective removal and subsequent offsite disposal of the following:

Portions of existing building indicated on drawings and as required to accommodate new construction.

Removal of doors and frames indicated "remove".

Removal and protection of existing fixtures, materials, and equipment items indicated "salvage".

JOB CONDITIONS

Occupancy: The existing building will be occupied. Conduct selective demolition work in manner that will minimize disruption of other tenant's normal operations.

Condition of Structures: Owner assumes no responsibility for actual condition of items or structures to be demolished.

Conditions existing at time of inspection for bidding purposes will be maintained by Owner insofar as practicable. However, minor variations within structure may occur by Owner's removal and salvage operations prior to start of selective demolition work.

Partial Demolition and Removal: Items indicated to be removed but of salvageable value to Contractor may be removed from structure as work progresses. Transport salvaged items from site as they are removed.

Storage or sale removed items on site will not be permitted.

Protections: Provide temporary barricades and other forms of protection to protect Owner's personnel, and other contractor's personnel from injury due to selective demolition work.

Provide interior and exterior shoring, bracing, or support to prevent movement, settlement, or collapse of structure or element to be demolished and adjacent facilities or work to remain.

Protect from damage existing finish work that is to remain in place and becomes exposed during demolition operations.

Protect floors with suitable coverings when necessary.

Provide temporary weather protection during interval between demolition and removal of existing construction on exterior surfaces and installation of new construction to ensure that no water leakage or damage occurs to structure or interior areas of existing building.

Remove protections at completion of work.

Damages: Promptly repair damages caused to adjacent facilities by demolition work.

Traffic: Conduct selective demolition operations and debris removal to ensure minimum interference with roads, streets, walks, and other adjacent occupied or used facilities.

Do not close, block, or otherwise obstruct streets, walks, or other occupied or used facilities without written permission from authorities having jurisdiction. Provide alternate routes around closed or obstructed traffic ways if required by governing regulations.

Flame Cutting: Do not use cutting torches for removal until work area is cleared of flammable materials. At concealed spaces, such as interior of ducts and pipe spaces, verify condition of hidden space before starting flame-cutting operations. Maintain portable fire suppression devices during flame-cutting operations.

Utility Services: Maintain existing utilities indicated to remain in service and protect them against damage during demolition operations.

Do not interrupt utilities serving occupied or used facilities, except when authorized in writing by authorities having jurisdiction. Provide temporary services during interruptions to existing utilities, as acceptable to governing authorities.

Maintain fire protection services during selective demolition operations.

Environmental Controls: Use temporary enclosures and other methods to limit dust and dirt migration. Comply with governing regulations pertaining to environmental protection.

Do not use water when it may create hazardous or objectionable conditions such as damage to existing property, flooding, pollution or damage to owner personnel.

PART II PRODUCTS (Not Applicable)

PART III EXECUTION

PREPARATION

General: Provide as necessary interior and exterior shoring, bracing, or support to prevent movement, settlement, or collapse of areas to be demolished and adjacent facilities to remain.

Cease operations and notify Owner's Representative immediately if safety of structure appears to be endangered. Take precautions to support structure until determination is made for continuing operations.

DEMOLITION

General: Perform selective demolition work in a systematic manner. Use such methods as required to complete work indicated on Drawings in accordance with demolition schedule and governing regulations.

Demolish concrete and masonry in small sections. Cut concrete and masonry at junctures with construction to remain using power-driven masonry saw or hand tools: do not use power-driven impact tools.

Located demolition equipment throughout structure and promptly remove debris to avoid imposing excessive loads on supporting walls, floors, or framing.

Provide services for effective air and water pollution controls as required by local authorities having jurisdiction.

For interior slabs on grade, use removal methods that will not crack or structurally disturb adjacent slabs or partitions. Use power saw where possible.

Completely fill below-grade areas and voids resulting from demolition work. Provide fill consisting of approved earth, gravel, or sand, free of trash and debris, stones over 3 inches in diameter, roots, or other organic matter.

If unanticipated mechanical, electrical, or structural elements that conflict with intended function or design are encountered, investigate and measure both nature and extent of the conflict. Submit report to Owner's Representative in written, accurate detail. Pending receipt of directive from Owner's Representative, in written, accurate detail. Pending receipt of directive fro Owner's Representative, rearrange selective demolition schedule as necessary to continue overall job progress without undue delay.

SALVAGED MATERIALS

Salvaged items: Where indicated on Drawings as "Salvage – Deliver to Owner," carefully remove indicated items, clean, store, and turn over to Owner and obtain receipt.

DISPOSAL OF DEMOLISHED MATERIALS

Remove from building site debris, rubbish, and other materials resulting from demolition operations. Transport and legally dispose off site.

If hazardous materials are encountered during demolition operations, comply with applicable regulations, laws, and ordinances concerning removal, handling, and protection against exposure or environmental pollution.

Burning of removed materials is not permitted on project site.

CLEANUP AND REPAIR

General: Upon completion of demolition work, remove tools, equipment, and demolished materials from site. Remove protections and leave interior areas broom clean.

Repair demolition performed in excess of that required. Return elements of construction and surfaces to remain to condition existing prior to start operations. Repair adjacent construction or surfaces soiled or damaged by selective demolition work.

END OF SECTION

Division 3-Concrete

SECTION 03100 – CONCRETE FORMWORK

1. RELATED DOCUMENTS

   The general provision of the contract, including General and Special Conditions, apply to the work specified in this section.

2. DESCRIPTION OF WORK

   The extent of formwork is indicated by the concrete structures shown on the drawings.

   The work includes providing formwork and shoring for architectural and structural cast-in-place concrete, and the installation into formwork of anchor bolts, setting plates, bearing plates, anchorages, inserts, frames, nosings and other items to be embedded in concrete (but not including reinforcing steel).

3. GENERAL

   A. CODES AND STANDARDS

      Unless otherwise shown or specified, design, construct, erect, maintain and remove forms and related structures for cast-in-place concrete work in compliance with the American Concrete Institute standard ACAI 347, 'Recommended Practice for Concrete Formwork'.

   B. MOCK-UP OR SAMPLE PANELS

      Provide formwork for mock-up or sample panels as may be required for the cast-in-place concrete work specified in Section 03300. Construct forms using facing materials required to provide the specified finishes and textures. Do not proceed with structure formwork until sample units and forms have been accepted by the A/E.

4. DESIGN OF FORMWORK

   Design, erect, support, brace and maintain formwork so that it will safely support all vertical and lateral loads that might be applied until such loads can be supported by the concrete structure. Carry vertical and lateral loads to the ground by the formwork system and by the in-place-construction that has attained adequate strength for that purpose. Construct formwork so that concrete members and structures are of the correct size, shape, alignment, elevation and position.

SECTION 03100 – CONCRETE FORMWORK

4. DESIGN OF FORMWORK (CONT)

Design forms and falsework to include assumed values of live load, dead load, weight of moving equipment operated on formwork, concrete mix, height of concrete drop, vibrator frequency, ambient temperature, foundation pressures, stresses, lateral stability, and other factors pertinent to safety of structure during construction.

Provide shores and struts with positive means of adjustment capable of taking up all formwork settlement during concrete placing operations, using wedges of jacks or a combination thereof. Provide trussed supports when adequate foundations for shores and struts cannot be secured.

Support form facing materials by structural members spaced sufficiently close to prevent deflection of the form facing material. Fit forms placed in successive units for continous surfaces to accurate alignment to assure a smooth competed surface, free from irregularities and within the allowable tolerances. Provide camber in formwork as required for anticipated deflections in formwork due to weight and pressure of fresh concrete and construction loads for long –span members without intermediate supports.

Provide temporary openings in wall forms, column forms and at other locations necessary to permit inspection and facilitate clean-out.

Design format to be readily removable without impact, shock or damage to the cast-in-place concrete surfaces and adjacent materials.

Provide formwork sufficiently tight to prevent leakage of cement paste during concrete placement. Solidly but all joints and provide backup material at joints as may be required to prevent leakage and fins.

Side forms of footings may be omitted and concrete placed directly-against the neat excavation only when requested by the Contractor and accepted by the A/E. When omission of forms is accepted, provide additional concrete required beyond the minimum design profiles and dimensions of the footings as detailed.

5. FORM MATERIALS:

A. Forms for Exposed Finish Concrete

Unless otherwise shown or specified, construct all formwork for exposed concrete surfaces with plywood, metal, metal-framed plywood-faced or other panel type materials acceptable to the A/E to provide continuous, straight, smooth exposed surfaces. Furnish in the largest practicable sizes to minimize number of joints and to conform to the joint system shown on the drawings. Provide form material with sufficient thickness to

SECTION 03100 – CONCRETE FORMWORK

5. FORM MATERIALS (CONT)

A. Forms for Exposed Finish Concrete (CONT)

withstand the pressure of newly placed concrete without bow or deflection.

Unless otherwise shown or specified, use plywood complying with U.S. Product Standard PS-1, B-B High Density Overlaid Concrete Form, Class I.

B. Forms for Unexposed Finish Concrete

Form concrete surfaces which will be unexposed in the finished structure with plywood, boards, metal or other acceptable material. Provide lumber that is dressed on at least two (2) edges and one (1) side for a tight fit.

C. Forms for Textured Finish Concrete

For textured finish concrete provide forms as required by the drawings, if any.

6. TOLERANCES FOR FORMWORK CONSTRUCTION

Construct formwork to provide completed concrete surfaces complying with the tolerances specified in ACI 347, Section 2.4, after removal of forms and prior to patching and finishing of cast-in-place formed surfaced.

7. FORM CONSTRUCTION

A. General

Construct forms complying with ACI 347, to the exact sizes, shapes, lines and dimensions shown, and as required to obtain accurate alignment, location, grades, level and plumb work in the finished structures, moldings, rustications, reglets, chamfers, blocking, screeds, bulkheads, anchorages and inserts, and other features required on the work. Use selected materials to obtain the required finishes.

SECTION 03100 – CONCRETE FORMWORK

7. FORM CONSTRUCTION

A. General (CONT)

Fabricate forms for easy removal without hammering or prying against the concrete surfaces. Provide crush plates or wrecking plates where stripping may damage cast concrete surfaces. Provide top forms for inclined surfaces where the slope is too steep to place concrete with bottom forms only. Kerf wood inserts for forming keyways, reglets, recesses, and the like, to prevent swelling and assure ease of removal.

Provide temporary opening where interior area of formwork is inaccessible for cleanout, for inspection before concrete placement, and for placement of concrete. Securely brace temporary openings and set tightly to forms in as inconspicuous location as possible consistent with requirements of the work.

Where chamfer exposed external corners and edges occur use chamfer strips accurately fabricated to produce uniform smooth lines and tight edge joints. Provide chamfers of wood, metal, or PVC, to form the required corner or edge shapes as shown. Select one material and use throughout entire job.

Carefully form intersecting planes to proved true, clean-out corners.

Provide all openings in forms to accommodate other work, including mechanical and electrical work. Accurately place and securely support all items required to be built into the forms.

B. Falsework

Erect falsework and adequately support, brace and maintain it to safely support vertical, lateral and asymmetrical loads applied until such loads can be supported by the in-place concrete structure. Construct falsework so that adjustments can be made for tae-up and settlement.

Provide suitable wedges, jacks or camber strips to facilitate vertical adjustments. Carefully inspect falsework and formwork during and after concrete placement operations to determine any abnormal deflection or signs of failure in the work; make necessary adjustments to produce work of the required dimensions.

C. Forms for Exposed Concrete

Drill forms to suit ties used and to prevent leakage of concrete mortar around tie holes. Do not splinter forms by driving ties through improperly prepared holes.

SECTION 03100- CONCRETE FORMWORK

7. FORM CONSTRUCTION (CONT)

C. Forms for Exposed Concrete (CONT)

Do not use metal cover plates for patching holes or defects in forms.

Provide sharp, clean corners at intersecting planes, without visible edges or offsets. Back joints with extra studs or girts to maintain true, square intersections.

Use extra studs, walers and bracing as required to prevent bowing of forms between studs and to avoid bowed appearance in concrete. Do not use narrow strips of form material which will produce bow.

Assemble forms so they may be readily removed without damage to exposed concrete surfaces.

Form molding shapes, recesses and projection with smooth-finish materials, and install in forms with sealed joints to prevent displacement.

D. Form Ties

Provide factory-fabricated, adjustable-length, removable or snapoff metal form ties, designed to prevent form deflection, and to prevent spalling concrete surfaces upon removal.

Unless otherwise shown, provide ties so that the portion remaining within the concrete after removal of the exterior parts is at least 1 ½" inside from the concrete surface. Unless otherwise shown, provide form ties which will not leave a hole larger than 1" diameter in the concrete surface.

Form ties fabricated on the project site and wire ties are not acceptable.

E. Corner Treatment

Form exposed corners of beams and columns to produce square, smooth, solid, unbroken lines, except as otherwise shown.

Where chamfered corners occur form chamfers with ¾" x ¾" strips, unless otherwise shown, accurately formed and surfaced to produce uniformly straight lines and tight edge joints. Extend terminal edges to required limit and miter chamfer strips at changes in direction.

Unexposed corners may be formed either square or chamfered.

SECTION 03100 – CONCRETE FORMWORK

7. FORM CONSTRUCTION (CONT)

F. Provisions for other Trades

Provide openings in concrete formwork to accommodate work of other trades. Size and location of openings, recesses and chases are the responsibility of the trade requiring such items. Accurately place and securely support items to be built into forms.

F. Cleanouts, Cleansing and Tightening

Provide temporary openings in forms as required to facilitate cleaning and inspection. Thoroughly clean forms and adjacent surfaces to receive concrete. Remove chips, wood, sawdust, dirt or other debris just before concrete is to be placed. Retighten forms immediately after concrete placement as required to eliminate mortar leaks.

8. PREPARATION OF FORM SURFACES

Coat the contact surfaces of forms with a form-coating compound before reinforcement is placed. Provide commercial formulation form-coating compounds that will not impair subsequent treatment of concrete surfaces requiring bond or adhesion, nor impede the wetting of the form-coating compound manufacturer's direction. Do not allow excess form-coating material to accumulate in the forms or to come into contact with concrete surfaces against which fresh concrete will be placed. Apply in compliance with the manufacturer's instructions.

Coat steel forms with a nom-staining, rust-preventive form oil or otherwise protect agains rusting. Rust-stained steel formwork is not acceptable.

9. SHORES AND SUPPORTS

Extend shoring from ground to roof for structures four (4) stories or less, unless otherwise permitted.

Extend shoring at least three (3) floors under floor or roof being placed for structures over four (4) stories. Shore floor directly under floor or roof being placed, so that loads from construction above will transfer directly to these shore. Space out shoring in stories below this level in such a manner that no floor or member will be excessively loaded or will induce tensile stress in concrete members where no reinforcing steel is provided. Extend shores beyond minimums if required to ensure the proper distribution of loads throughout the structure.

Perform removal of shores and re-shoring in a planned sequence to avoid damage to partially cured concrete. Locate and provide adequate re-shoring to safely support the work.

9. SHORES AND SUPPORTS (CONT)

Remove forms from one girder at a time, and re-shore before other supports are removed. After girders are re-shored, forms for one beam and its adjacent slab may be removed and immediately re-shored before other supports are removed.

In flat-slab construction, allow shores for area within intersection on middle strips of each panel to remain in place during stripping and re-shoring operations. After other shores in each panel are removed, place re-shores at midpoints between columns and on column lines before next panel is stripped. Keep re-shores in place until the concrete has attained its required 28 day strength are heavy loads due to construction operations have been removed.

10. REMOVAL OF FORMS

A. General

Form and supports shall remain in place for not less than the following periods time:

Walls	24 hours
Columns	24 hours
Sides of beams and girders	24 hours
Pan joist forms 30 in. wide or less	3 days
Over 30 in. wide	4 days
Arch centers	14 days
Joist, beam, or girder soffits	
Under 10 ft. clear span	
Between supports	7 days
10 to 20 ft. clear span	
Between supports	14 days
Over 20 ft. clear span	
Between supports	21 days
Floor slabs	
Under 10 ft. clear span	
Between supports	4 days
10 to 20 ft. clear span	
Between supports	7 days
Over 20 ft. clear span	
Between supports	10 days

SECTION 03100- CONCRETE FORMWORK

11. RE-USE OF FORMS

Clean and repair the surfaces of forms that are to be re-used in the work, except that split, frayed, delaminated or otherwise damaged form facing material will not be acceptable. Apply new form coating compound material to all concrete contact form surfaces as specified for new formwork.

When forms are extended for successive concrete placement, thoroughly clean surfaces, remove fins and laitance, and tighten forms to close all joints to avoid offsets. Do not use "patched" forms for exposed concrete surfaces, except as acceptable to the A/E.

11. SUBMITTALS

A. Manufacturer's Date, Concrete Formwork

Submit two (2) copies of manufacturer's specifications and installation instructions for proprietary materials and items as may be required, including form coatings, manufactured form systems, ties and accessories.

B. Shop Drawings, Concrete Formwork

Submit shop drawings for the fabrications and erection of specific finished concrete surfaces as shown or specified. Show the general construction of the forms including jointing, any special formed joints or reveals, location and pattern of form tie placement, and other items which affect the exposed concrete visually.

SECTION 03200 – CONCRETE REINFORCEMENT

1. RELATED DOCUMENTS

The general provisions of the contract, including General and Special Conditions, apply to the work specified in this section.

2. DESCRIPTION OF WORK

The extent of concrete reinforcement is shown on the drawings and in schedules.

The work includes fabrication and placement of reinforcement for cast in place architectural and structural concrete, including bars, welded wire fabric, ties and supports.

3. GENERAL

A. Codes and Standards

Comply with the requirements of the following codes and standards, except as herein modified:

1. American Concrete Institute, ACI 315 “Manual of Standard Practice for Detailing Reinforced Concrete Structures”.
2. American Concrete Institute, ACI 318 “Building Code Requirements for Reinforced Concrete”. (Latest Edition).
3. Concrete Reinforcing Steel Institute, “Manual of Standard Practice”.

4. MATERIALS

A. Reinforcing Bars

Comply with the requirements of ASTM A 615 and with grades given on drawings.

B. Steel Wire

Provide plain, cold-drawn, steel wire complying with ASTM A 82.

4. MATERIALS (CONT)

C. Welded Wire Fabric

Provide welded steel wire fabric for concrete reinforcement Complying with ASTM A 185.

Furnish in flat sheets, not rolls, unless rolls are acceptable to the A/E.

D. Column Spirals

Provide plain, cold-drawn wire complying with ASTM A 82, or hot-rolled rods for spirals complying with ASTM A 615.

E. Supports for Reinforcement

Provide supports for reinforcement including bolsters, chairs, spacers and other devices suitable for proper spacing, supporting and fastening reinforcing bars and reinforcing bars and welded wire fabric in place. Use wire bar type supports complying with PS 7-66. Wood, brick, and other devices will not be acceptable.

For slabs on grade, use supports with sand plates or horizontal Runners where wetted base materials will not support chair legs.

For exposed-to-view concrete surfaces, where legs of supports are In contact with forms, provide supports with legs which are hot-dip galvanized, or plastic protected.

5. FABRICATION

A. General

Shop-fabricate reinforcing bars to conform to the required shapes and Dimensions, with fabrication tolerances complying with ACI 315. In Case of fabricating errors, do not re-bend or straighten reinforcement In a manner that will injure or weaken the material. The use of heat for This purpose will not be permitted.

B. Identification

Deliver all reinforcement to the project site bundled, tagged and marked. Use metal tags indicating bar size, lengths, and other information Corresponding to markings shown on placement diagrams.

SECTION 03200 – CONCRETE REINFORCEMENT

5. FABRICATION (CONT)

C. Rejected Materials

Reinforcement with any of the following defects will not be permitted in the work:

1. Bar lengths, depths and bends exceeding the specified Fabrication tolerances.

2. Bends or kinks not indicated on drawings or final shop Drawings.

3. Bars with reduced cross-section due to excessive rusting Or other cause.

D. Fabricating and placing tolerances

1. Bars used for concrete reinforcement shall meet the following Requirements for fabricating tolerances:

a. Sheared length: plus or minus 1 in.
b. Depth of truss bars: plus 0, minus ½ in.
c. Stirrups, ties, and spirals: plus or minus ½ in.
d. All other bends: plus or minus 1 in.

2. Bars shall be placed to the following tolerances:

a. Concrete cover to formed surfaces: plus or minus ¼ in.
b. Minimum spacing between bars: minus ¼ in.
c. Top bars in slabs and beams:

1. Members 8 in. deep or less: plus or minus ¼ in.
2. Members more than 8 in. but not over 2 ft. deep: Plus or minus ½ in.
3. Members more than 2 ft. deep: plus or minus 1 in.

d. Crosswise of members: spaced evenly within 2 in.
e. Lengthwise of members: plus or minus 2 in.

3. Bars may be moved as necessary to avoid interference with other reinforcing steel, conduits, or embedded items. If bars are moved more than one bar diameter, or enough to exceed the above tolerances, the resulting arrangement of bars shall be subject to approval.

6. PLACING

A. General

Comply with the specified codes and standards, and the Concrete Reinforcing Steels Institute recommended practice for “Placing Reinforcing Bars”, for details and methods of reinforcement, placement and supports, and as herein specified.

Clean reinforcement to be free from loose rust, mill scale, earth, and other material which reduce or destroy bond with concrete.

Accurately position, support, and secure reinforcement against displacement by formwork, construction, or concrete placement operations. Locate and support reinforcing by metal chairs, bolsters, runners, spacers and hanger, as required.

Place reinforcement to obtain at least the minimum coverages for concrete protection. Arrange, space, and securely tie bars and bar supports together with 16 gauge wire to hold reinforcement accurately in position during concrete placement operations. Set wire ties so that ends are directed into the concrete, not toward exposed concrete surfaces.

Install welded wire fabric in as long lenghts as practicable. Lab adjoining pieces at least one full mesh and lace splices with 16 gauge wire. Do not make end laps between supporting beams. Offset end laps in adjacent widths to prevent continuous laps in either direction.

Provide sufficient numbers of supports and of strength to carry the reinforcement. Do not place reinforcing bars more than 2” beyond the last leg of any continuous bar support. Do not use supports as bases for runways for concrete conveying equipment and similar construction loads.

Space reinforcing bars to comply with ACI 318, Chapter 7.6. Reinforcing bars may be relocated as necessary to avoid interference with other reinforcement, conduit or other embedded items. However, if any reinforcing bar is moved a distance exceeding one bar diameter or the specified placing tolerance, the resulting rearrangement of the reinforcement will be subject to acceptance by the A/E.

B. Splices in reinforcement

Provide standard reinforcement splices by lapping ends, placing bars in contact, and tightly wire tieing. Comply with the requirements of ACI 318, Chapter 12.15-12.20 for minimum lap of spliced bars, and with details shown on drawings.

7. SUBMITTALS

   A. Manufacturer's Data, Concrete Reinforcement

      Submit two (2) copies of manufacturer's specifications and installation Instructions for all proprietary materials and reinforcement accessories.

   B. Mill Certificates, Concrete reinforcement

      Submit two (2) copies of steel producer's certificates of mill tests for all Reinforcing steel.

   C. Shop Drawings, Concrete Reinforcement

      Submit shop drawings for fabrication, bonding and placement of concrete Reinforcement. Comply with the ACI 315 "Manual of Standard Practice for Detailing Reinforced Concrete Structures', showing bar schedules, stirrup spacing, diagrams of bent bars, arrangements and assemblies, as required for the fabrication and placement of concrete reinforcement. Include all special reinforcement required and openings through concrete structures. Show all reinforcement on elevations drawn at a scale of not less than l/4" to 1'-0".

8. SAMPLING AND TESTING

   The contractor shall employ, at his own expense, a testing laboratory (preferably the same used for concrete testing) accepted by the A/E to perform the tests hereinafter specified and to submit test reports to the A/E. The testing laboratory shall be responsible for conducting and interpreting the tests, and shall state in each report whether or not the test specimens comply with the specified requirements, and shall indicate any deviations therefrom.

   Test reinforcement for tensile and bonding requirements set forth in ANSI/ASTM A 615 and tables 2 and 3 from that standard.

   Disregard article 10 number of Tests from ASTM standard. Take one set of three 30" long samples for each bar size from each truck even if the reinforcement is already bent.

8. SAMPLING AND TESTING (CONT.)

TABLE 2. Tensile Requirements

	Grade 40	Grade 60
Tensile strength, min, psi.	70,000	90,000
(Mpa)	-483	-621
Yield, min, psi (Mpa)	40,000	60,000
	-276	-414
Elongation in 8 in or 203		
mm, min, %		
Bar No.		
3	11	9
4, 5, 6	12	9
7	11	8
8	10	8
9	9	7
10	8	7
11	7	7
14, 18	…	7

TABLE 3. Bend Test Requirement

Bar Designation No.	Pin Diameter for *Bend Tests d- nomina diameter of specimen	
	Grade 40	Grade 60
3, 4, 5	4d	4d
6	5d	5d
7, 8	5d	6d
9, 10, 11	5d	8d

*Test bends 180 deg. Unless noted otherwise

SECTION 03200

CONCRETE REINFORCEMENT

PART 1 - GENERAL

1.01 DESCRIPTION

A. Work included: Provide concrete reinforcement where shown on the Drawings, as specified herein, and as needed for a complete and proper installation.

B. Related Work:

1) Documents affecting work of this Section include, but are not necessarily limited to, General Conditions, Supplementary Conditions, and Sections in Division 1 of these Specifications.

2) Section 03100: Concrete formwork.

3) Section 03300: Cast-in-place concrete.

1.02 QUALITY ASSURANCE

A. Use adequate numbers of skilled workmen who are thoroughly trained and experienced in the necessary crafts and who are completely familiar with the specified requirements and the methods needed for proper performance of the work of this Section.

B. Comply with pertinent provisions of the following, except as may be modified herein.

1) ACI 318;

2) CRSI “Manual of Standard Practice”.

1.03 SUBMITTALS

A. Comply with pertinent provisions of Section 01340.

B. Product data: Within 35 calendar days after the Contractor has received the Owner’s Notice to Proceed, submit:

1) Materials list of items proposed to be provided under this Section;

2) Manufacturer’s specifications and other data needed to prove compliance with the specified requirements;

3) Shop Drawings showing details of bars, anchors, and other items, if any, provided under this Section.

1.04 PRODUCT HANDLING

A. Comply with pertinent provisions of Section 01640.

B. Delivery and storage:

1) Use necessary precautions to maintain identification after bundles are broken.

2) Store in a manner to prevent excessive rusting and fouling with dirt, grease, and other bond-breaking coating.

PART 2 - PRODUCTS

2.01 REINFORCEMENT MATERIALS AND ACCESSORIES

A. Bars:

1) Provide the following using the grades shown on the drawings:

a. Deformed low alloy bars complying with ASTM A 706; or

b. Deformed billet steel bars complying with ASTM A615 and exceptions (1) and (2) included in Section 1921.2.5.2 of UBC 97 Code.

2) Where grades are not shown on the Drawings, use grade 60.

B. Steel wire:

1) Comply with ASTM A82.

2) For tie wire, comply with Fed Spec QQ-W-461, annealed steel, black, 16 gage minimum.

C. Welded wire fabric:

1) Provide welded steel, complying with ASTM A185.

D. Welding electrodes:

1) Comply with AWS A5.1, low hydrogen, E70 series.

E. Bolsters, chairs, spacers, and other devices for spacing, supporting, and fastening reinforcement in place:

1) Use wire bar type supports complying with CRSI recommendations, unless otherwise shown on the Drawings.

2) Do not use wood, brick, or other non-complying material.

3) For slabs on grade, use supports with sand plates or horizontal runners where base material will not support chair legs.

4) For exposed-to-view concrete surfaces, where legs of supports are in contact with forms, provide supports with either hot-dip galvanized or plastic-protected legs.

2.2 FABRICATION

A. General:

1) Fabricate reinforcing bars to conform to the required shapes and dimensions, with fabrication tolerances complying with the CRSI Manual.

2) In case of fabricating errors, do not straighten or re-bend reinforcement in a manner that will weaken or injure the material.

3) Reinforcement with any of the following defects will not be acceptable.

a. Bar lengths, depths, and/or bends exceeding the specified fabrication tolerances;

b. Bends or kinks not shown on the Drawings;

c. Bars with reduced cross-section due to excessive rusting or other cause.

PART 3 - EXECUTION

3.01 SURFACE CONDITIONS

A. Examine the areas and conditions under which work of this Section will be performed. Correct conditions detrimental to timely and proper completion of the Work. Do not proceed until unsatisfactory conditions are corrected.

3.02 INSTALLATION

A. General:

1) Comply with the specified standards for detail and method of placing reinforcement and supports, except as may be modified herein.

2) Clean reinforcement to remove loose rust and mill scale, earth, and other materials which reduce or destroy bond with concrete.

3) Position, support, and secure reinforcement against displacement by formwork, construction, and concrete placing operation.

4) Locate and support reinforcement by metal chairs, runners, bolsters, spacers, and hangers, as required.

5) Place reinforcement to obtain minimum coverages for concrete protection.

6) Arrange, space, and securely tie bars and bar supports together with the specified tie wire.

7) Set wire ties so twisted ends are directed away from exposed concrete surfaces.

B. Install welded wire fabric in as long lengths as practicable, lapping adjoining pieces at least one full mesh.

C. Provide sufficient numbers of supports, and of strength to carry the reinforcement.

D. Do not place reinforcing bars more than 2" beyond last leg of any continuous bar support.

E. Do not use supports as bases for runways for concrete conveying equipment and similar construction loads.

3.03 SPLICES

A. Lap splices:

1) Tie securely with the specified wire to prevent displacement of splices during placement of concrete.

B. Splice devices:

1) Obtain the Architect’s approval prior to using splice devices.

2) Install in accordance with manufacturer’s written instructions.

3) Splice in a manner developing at least 125% of the yielding strength of the bar.

C. Welding:

1) Perform in accordance with AWS D1.4-79.

D. Do not splice bars except at locations shown on the Drawings, except as otherwise specifically approved by the Architect.

3.04 TESTING

A. Samples:

1) Samples for physical test of reinforcement will consist of at least two pieces, each 18" long, of each size of reinforcement steel, selected by the testing agency from material at the building site or at the fabricator's or supplier's yard.

2) Material to be sampled at the building site shall have been delivered thereto at least 72 hours before it is needed.

B. Test:

1) Where samples are taken from bundles as delivered from the mill, with the bundles identified as to heat number, and provided mill analyses accompany the report, then one tensile test and one bend test will be made form a specimen of each ten tons or fraction thereof of each size of reinforcement steel.

2) Where positive identification of the heat number cannot be made, or where random samples are taken, then one series of tests will be made from each 2-1/2 tons or fraction thereof of each size of reinforcement steel.

3) Payment for testing is described in section 01410 of these Specifications.

END OF SECTION

SECTION 03300
CAST-IN-PLACE CONCRETE

PART 1 GENERAL

1.01 RELATED DOCUMENTS

A. Drawings and general provisions of the Contract, including General and Supplementary Conditions and Division 1 Specification Sections, apply to this Section.

1.02 SUMMARY

B. This Section specifies cast-in place concrete, including formwork, reinforcement, concrete materials, mix design, placement procedures, and finishes.

C. Related Sections include the following:

1. Division 2 Section "Earthwork" for drainage fill under slabs-on-grade.

2. Division 2 Section "Cement Concrete Pavement" for concrete pavement and walks.

3. Division 3 Section "Concrete Toppings" for metallic and nonmetallic concrete floor toppings.

1.04 SUBMITTALS

A. Product Data: For each type of manufactured material and product indicated.

B. Design Mixes: For each concrete mix. Include alternate mix designs when characteristics of materials, project conditions, weather, test results, or other circumstances warrant adjustments.

1. Indicate amounts of mix water to be withheld for later addition at Project site.

C. Steel Reinforcement Shop Drawings: Details of fabrication, bending, and placement, prepared according to ACI 315, "Details and Detailing of Concrete Reinforcement." Include material, grade, bar schedules, stirrup spacing, bent bar diagrams, arrangement, and supports of concrete reinforcement. Include special reinforcement required for openings through concrete structures.

D. Formwork Shop Drawings: Prepared by or under the supervision of a qualified professional engineer detailing fabrication, assembly, and support of formwork. Design and engineering of formwork are Contractor's responsibility.

1. Shoring and Reshoring: Indicate proposed schedule and sequence of stripping formwork, shoring removal, and installing and removing reshoring.

E. Welding Certificates: Copies of certificates for welding procedures and personnel.

F. Material Test Reports: From a qualified testing agency indicating and interpreting test results for compliance of the following with requirements indicated, based on compre-

hensive testing of current materials in G below at engineer's discretion (required for reinforcing steel with mill certificates older than 6 months):

G. Material Certificates: Signed by manufacturers certifying that each of the following items complies with requirements.

1. Cementitious materials and aggregates.

2. Form materials and form-release agents.

3. Steel reinforcement and reinforcement accessories.

4. Fiber reinforcement.

5. Admixtures.

6. Waterstops.

7. Curing materials.

8. Floor and slab treatments.

9. Bonding agents.

10. Adhesives.

11. Vapor retarders.

12. Epoxy joint filler.

13. Joint-filler strips.

14. Repair materials.

H. Minutes of preinstallation conference.

1.05 QUALITY ASSURANCE

I. Installer Qualifications: An experienced installer who has completed concrete Work similar in material, design, and extent to that indicated for this Project and whose work has resulted in construction with a record of successful in-service performance.

J. Professional Engineer Qualifications: A professional engineer who is legally qualified to practice in Puerto Rico and who is experienced in providing engineering services of the kind indicated. Engineering services are defined as those performed for formwork and shoring and reshoring installations that are similar to those indicated for this Project in material, design, and extent.

K. Manufacturer Qualifications: A firm experienced in manufacturing ready-mixed concrete products complying with ASTM C 94 requirements for production facilities and equipment.

1. Manufacturer must be certified according to the National Ready Mixed Concrete Association's Certification of Ready Mixed Concrete Production Facilities.

L. Testing Agency Qualifications: An independent testing agency, acceptable to authorities having jurisdiction, qualified according to ASTM C 1077 and ASTM E 329 to conduct the testing indicated, as documented according to ASTM E 548.

1. Personnel conducting field tests shall be qualified as ACI Concrete Field Testing Technician, Grade 1, according to ACI CP-1 or an equivalent certification program.

M. Source Limitations: Obtain each type or class of cementitious material of the same brand from the same manufacturer's plant, each aggregate from one source, and each admixture from the same manufacturer.

N. Welding: Qualify procedures and personnel according to AWS D1.4, "Structural Welding Code--Reinforcing Steel."

O. ACI Publications: Comply with the following, unless more stringent provisions are indicated:

1. ACI 301, "Specification for Structural Concrete."

2. ACI 117, "Specifications for Tolerances for Concrete Construction and Materials."

P. Mockups: Cast concrete slabs-on-grade mockup to demonstrate typical joints, surface finish, texture, tolerances, and standard of workmanship.

1. Build mockups approximately 200 sq. ft. in the location indicated or, if not indicated, as directed by Architect.

2. Notify Architect seven days in advance of dates and times when mockups will be constructed.

3. Obtain Architect's approval of mockups before starting construction.

4. If Architect determines that mockups do not meet requirements, demolish and remove them from the site and cast another until the mockup is approved.

5. Maintain mockups during construction in an undisturbed condition as a standard for judging the completed Work.

6. Demolish and remove mockups when directed.

7. Approved mockups may become part of the completed Work if undisturbed at time of Substantial Completion.

Q. Preinstallation Conference: Conduct conference at Project site to comply with requirements in Division 1 Section "Project Meetings."

1. Before submitting design mixes, review concrete mix design and examine procedures for ensuring quality of concrete materials. Require representatives of each entity directly concerned with cast-in-place concrete to attend, including the following:
   a. Contractor's superintendent.
   b. Independent testing agency responsible for concrete design mixes.
   c. Ready-mix concrete producer.
   d. Concrete subcontractor.

1.06 DELIVERY, STORAGE, AND HANDLING

R. Deliver, store, and handle steel reinforcement to prevent bending and damage.

PART 2 PRODUCTS

2.01 FORM-FACING MATERIALS

A. Smooth-Formed Finished Concrete: Form-facing panels that will provide continuous, true, and smooth concrete surfaces. Furnish in largest practicable sizes to minimize number of joints.

1. Plywood, metal, or other approved panel materials.
2. Exterior-grade plywood panels, suitable for concrete forms, complying with DOC PS 1, and as follows:
   a. Medium-density overlay, Class 1, or better, mill-release agent treated and edge sealed.
   b. B-B (Concrete Form), Class 1, or better, mill oiled and edge sealed.

B. Rough-Formed Finished Concrete: Plywood, lumber, metal, or another approved material. Provide lumber dressed on at least two edges and one side for tight fit.

C. Forms for Cylindrical Columns, Pedestals, and Supports: Metal, glass-fiber-reinforced plastic, paper, or fiber tubes that will produce surfaces with gradual or abrupt irregularities not exceeding specified formwork surface class. Provide units with sufficient wall thickness to resist plastic concrete loads without detrimental deformation.

D. Chamfer Strips: Wood, metal, PVC, or rubber strips, 3/4 by 3/4 inch (19 by 19 mm), minimum.

E. Form-Release Agent: Commercially formulated form-release agent that will not bond with, stain, or adversely affect concrete surfaces and will not impair subsequent treatments of concrete surfaces.

1. Formulate form-release agent with rust inhibitor for steel form-facing materials.

F. Form Ties: Factory-fabricated, removable or snap-off metal or glass-fiber-reinforced plastic form ties designed to resist lateral pressure of fresh concrete on forms and to prevent spalling of concrete on removal.

1. Furnish units that will leave no corrodible metal closer than 1 inch to the plane of the exposed concrete surface.

2. Furnish ties that, when removed, will leave holes not larger than 1 inch in diameter in concrete surface.

3. Furnish ties with integral water-barrier plates to walls indicated to receive damproofing or waterproofing.

2.02 STEEL REINFORCEMENT

A. Reinforcing Bars: ASTM A 615, Grade 60, deformed.

B. Steel Bar Mats: ASTM A 184 assembled with clips.

1. Steel Reinforcement: ASTM A 615, Grade 60, deformed bars.

C. Plain-Steel Wire: ASTM A 82, as drawn.

D. Deformed-Steel Wire: ASTM A 496.

E. Plain-Steel Welded Wire Fabric: ASTM A 185, fabricated from as-drawn steel wire into flat sheets.

F. Deformed-Steel Welded Wire Fabric: ASTM A 497, flat sheet.

2.03 REINFORCEMENT ACCESSORIES

A. Bar Supports: Bolsters, chairs, spacers, and other devices for spacing, supporting, and fastening reinforcing bars and welded wire fabric in place. Manufacture bar supports according to CRSI's "Manual of Standard Practice" from steel wire, plastic, or precast concrete or fiber-reinforced concrete of greater compressive strength than concrete, and as follows:

1. For concrete surfaces exposed to view where legs of wire bar supports contact forms, use CRSI Class 1 plastic-protected or CRSI Class 2 stainless-steel bar supports.

B. Joint Dowel Bars: Plain-steel bars, ASTM A 615. Cut bars true to length with ends square and free of burrs.

C. Epoxy-Coated Joint Dowel Bars: ASTM A 775; with ASTM A 615, Grade 60, plain-steel bars.

2.04 CONCRETE MATERIAL

A. Portland Cement: ASTM C 150, Type I.

B. Normal-Weight Aggregate: ASTM C 33, uniformly graded, and as follows:

1. Nominal Maximum Aggregate Size: ¾ inch.

2. Combined Aggregate Gradation: Well graded from coarsest sieve to finest with not more than 18 percent and not less than 8 percent retained on an individual sieve, except that less than 8 percent may be retained on coarsest sieve and on No. 50 sieve, and less than 8 percent may be retained on sieves finer than No. 50.

C. Water: Portable and complying with ASTM C 94.

2.05 ADMIXTURES

A. General: Admixtures certified by manufacturer to contain not more than 0.1 percent water-soluble chloride ions by mass of cementitious material and to be compatible with other admixtures and cementitious materials. Do not use admixtures containing calcium chloride.

B. Water-Reducing Admixture: ASTM C 494, Type A.

C. High-Range, Water-Reducing Admixture: ASTM C 494, Type F.

D. Water-Reducing and Retarding Admixture: ASTM C 494, Type D.

E. Corrosion-Inhibiting Admixture: Commercially formulated, anodic inhibitor or mixed cathodic and anodic inhibitor; capable of forming a protective barrier and minimizing chloride reactions with steel reinforcement in concrete.

1. Available Products: Subject to compliance with requirements, products that may be incorporated into the Work include, but are not limited to, the following:

2. MCI 2000 or MCI 2005; Cortec Corporation.

3. DCI or DCI-S; W. R. Grace & Co., Construction Products Div.

4. Rheocrete 222+; Master Builders, Inc.

5. FerroGard-901; Sika Corporation.

2.06 WATERSTOPS

A. Flexible Rubber Waterstops: CE CRD-C 513, for embedding in concrete to prevent passage of fluids through joints. Factory fabricate corners, intersections, and directional changes.

1. Profile: Ribbed with center bulb.

B. Flexible PVC Waterstops: CE CRD-C 572, for embedding in concrete to prevent passage of fluids through joints. Factory fabricate corners, intersections, and directional changes.

1. Profile: Ribbed with center bulb.

C. Available Manufacturers: Subject to compliance with requirements, manufacturers offering products that may be incorporated into the Work include, but are not limited to, the following:

1. Rubber Waterstops:

a. Greenstreak.
b. Progress Unlimited Inc.

c. Westec Barrier Technologies; Div. of Western Textile Products, Inc.

d. Williams Products, Inc.

2. PVC Waterstops:

a. Greenstreak.

b. Meadows: W. R. Meadows, Inc.

c. Progress Unlimited Inc.
d. Sternson Group.

e. Tamms Industries Co.; Div. of LaPorte Construction Chemicals North America, Inc.

f. Vinylex Corporation.

g. Westec Barrier Technologies; Div. of Western Textile Products, Inc.

D. Self-Expanding Strip Waterstops: Manufactured rectangular or trapezoidal strip, sodium bentonite or other hydrophylic material for adhesive bonding to concrete.

1. Available Products: Subject to compliance with requirements, products that may be incorporated into the Work include, but are not limited to, the following:

a. Volclay Waterstop-RX; Colloid Environmental Technologies Co.

b. Mirastop; Mirafi Moisture Protection, Div. of Royal Ten Cate (USA), Inc.

c. Adeka Ultra Seal; Mitsubishi International Corporation.

d. Superstop; Progress Unlimited Inc.

2.07 VAPOR RETARDERS

A. Vapor Retarder: ASTM E 1745, Class C, of one of the following materials; or polyethylene sheet, ASTM D 4397, not less than 6 mils thick:

1. Nonwoven, polyester-reinforced, polyethylene coated sheet; 6 mils thick.

2. Three-ply, nylon- or polyester-cord-reinforced, laminated, high-density polyethylene sheet; 7.8 mils thick.
3. Vapor Retarder: ASTM E 1745, Class B, five-ply, nylon- or polyester-cord-reinforced, high-density polyethylene sheet; 10 mils thick.

2.08 FLOOR AND SLAB TREATMENTS

A. Slip-Resistive Aggregate Finish: Factory-graded, packaged, rustproof, nonglazing, abrasive aggregate of fused aluminum-oxide granules or crushed emery with emery aggregate containing not less than 50 percent aluminum oxide and not less than 25 percent ferric oxide; unaffected by moisture, and cleaning materials.

To be applied as indicted on Architectural Drawings.

B. Unpigmented Mineral Dry-Shake Floor Hardener: Factory-packaged dry combination of portland cement, graded quartz aggregate, and plasticizing admixture.

To be applied as indicted on Architectural Drawings.

C. Penetrating Liquid Floor Treatment: Chemically reactive, waterborne solution of inorganic silicate or siliconate materials and proprietary components; odorless; colorless; that penetrates, hardens, and densifies concrete surfaces.

2.09 CURING MATERIALS

A. Evaporation Retarder: Waterborne, monomolecular film forming, manufactured for application to fresh concrete.

B. Absorptive Cover: AASHTO M 182, Class 2, burlap cloth made from jute or kenaf, weighing approximately 9 oz./sq. yd. (305 g/sq. m) dry.

C. Moisture-Retaining Cover: ASTM C 171, polyethylene film or white burlap-polyethylene sheet.

D. Water: Potable.

E. Clear, Solvent-Borne, Membrane-Forming Curing Compound: ASTM C 309, Type 1, Class B.

F. Clear, Waterborne, Membrane-Forming Curing Compound: ASTM C 309, Type 1, Class B.

G. Clear, Solvent-Borne, Membrane-Forming Curing and Sealing Compound: ASTM C 1315, Type 1, Class A.

H. Clear, Waterborne, Membrane-Forming Curing and Sealing Compound: ASTM C 1315, Type 1, Class A.

I. Available Products: Subject to compliance with requirements, products that may be incorporated into the Work include, but are not limited to, the following:

J. Products: Subject to compliance with requirements, provide one of the following:

1. Evaporation Retarder:

a. Cimfilm; Axim Concrete Technologies.

b. Finishing Aid Concentrate; Burke Group, LLC (The).

c. Spray-Film; ChemMasters.

d. Aquafilm; Conspec Marketing & Manufacturing Co., Inc.

e. Sure Film; Dayton Superior Corporation.

f. Eucobar; Euclid Chemical Co.

g. Vapor Aid; Kaufman Products, Inc.

h. Lambco Skin; Lambert Corporation.

i. E-Con; L&M Construction Chemicals, Inc.

j. Confilm; Master Builders, Inc.

k. Waterhold; Metalcrete Industries.

l. Rich Film; Richmond Screw Anchor Co.

m. SikaFilm; Sika Corporation.

n. Finishing Aid; Symons Corporation.

o. Certi-Vex EnvioAssist; Vexcon Chemicals, Inc.

2. Clear, Solvent-Borne, Membrane-Forming Curing Compound:

a. AH Clear Cure; Anti-Hydro International, Inc.

b. Spartan-Cote; Burke Group, LLC (The).

c. Spray-Cure & Seal 15; ChemMasters.

d. Conspec #1-15 percent solids; Conspec Marketing & Manufacturing Co., Inc.

e. Day-Chem Cure and Seal; Dayton Superior Corporation.

f. Diamond Clear; Euclid Chemical Co.

g. Nitocure S; Fosroc.

h. Lambco 120; Lambert Corporation.

i. L&M Dress & Seal 18; L&M Construction Chemicals, Inc.

j. CS-309; W. R. Meadows, Inc.

k. Seal N Kure; Metalcrete Industries.

l. Rich Seal 14 percent UV; Richmond Screw Anchor Co.

m. Kure-N-Seal; Sonneborn, Div. of ChemRex, Inc.

n. Flortec 14; Sternson Group.

o. Cure & Seal 14 percent; Symons Corporation.

p. Clear Seal 150; Tamms Industries Co., Div. of LaPorte Construction Chemicals of North America, Inc.

q. Acrylic Cure; Unitex.

r. Certi-Vex AC 309; Vexcon Chemicals, Inc.

3. Clear, Waterborne, Membrane-Forming Curing Compound:

a. AH Clear Cure WB; Anti-Hydro International, Inc.

b. Spartan Cote WB; Burke Group, LLC (The).

c. Safe-Cure & Seal 20; ChemMasters.

d. High Seal; Conspec Marketing & Manufacturing Co., Inc.

e. Safe Cure and Seal; Dayton Superior Corporation.

f. Diamond Clear VOX; Euclid Chemical Co.

g. SureCure; Kaufman Products Inc.

h. Glazecote Sealer-20; Lambert Corporation.

i. Dress & Seal WB; L&M Construction Chemicals, Inc.

j. Vocomp-20; W. R. Meadows, Inc.

k. Metcure; Metalcrete Industries.

l. Cure & Seal 100E; Nox-Crete Products Group, Kinsman Corporation.

m. Rich Seal 14 percent E; Richmond Screw Anchor Co.

n. Kure-N-Seal W; Sonneborn, Div. of ChemRex, Inc.

o. Florseal W.B.; Sternson Group.

p. Cure & Seal 14 percent; Symons Corporation.

q. Horncure 100; Tamms Industries Co., Div. of LaPorte Construction Chemicals of North America, Inc.

r. Hydroseal; Unitex.

s. Vexcon Starseal 309; Vexcon Chemicals, Inc.

4. Clear, Solvent-Borne, Membrane-Forming Curing and Sealing Compound:

a. Spray-Cure & Seal Plus; ChemMasters.

b. UV Super Seal; Lambert Corporation.

c. Lumiseal Plus; L&M Construction Chemicals, Inc.

d. CS-309/30; W. R. Meadows, Inc.

e. Seal N Kure 30; Metalcrete Industries.

f. Rich Seal 31 percent UV; Richmond Screw Anchor Co.

g. Cure & Seal 31 percent UV; Symons Corporation.

h. Certi-Vex AC 1315; Vexcon Chemicals, Inc.

5. Clear, Waterborne, Membrane-Forming Curing and Sealing Compound:

a. Klear-Kote Cure-Sealer-Hardener, 30 percent solids; Burke Group, LLC (The).

b. Polyseal WB; ChemMasters.

c. UV Safe Seal; Lambert Corporation.

d. Lumiseal WB Plus; L&M Construction Chemicals, Inc.

e. Vocomp-30; W. R. Meadows, Inc.

f. Metcure 30; Metalcrete Industries.

g. Vexcon Starseal 1315; Vexcon Chemicals, Inc.

2.10 RELATED MATERIALS

A. Joint-Filler Strips: ASTM D 1751, asphalt-saturated cellulosic fiber, or ASTM D 1752, cork or self-expanding cork.

B. Epoxy Joint Filler: Two-component, semirigid, 100 percent solids, epoxy resin with a Shore A hardness of 80 per ASTM D 2240.

C. Bonding Agent: ASTM C 1059, Type II, non-redispersible, acrylic emulsion or styrene butadiene.

D. Epoxy-Bonding Adhesive: ASTM C 881, two-component epoxy resin, capable of humid curing and bonding to damp surfaces, of class and grade to suit requirements, and as follows:

1. Type: Class I and II, non-load bearing, for bonding hardened or freshly mixed concrete to hardened concrete.

E. Reglets: Fabricate reglets of not less than 0.0217-inch-thick galvanized steel sheet. Temporarily fill or cover face opening of reglet to prevent intrusion of concrete or debris.

F. Dovetail Anchor Slots: Hot-dip galvanized steel sheet, not less than 0.0336 inch (0.85 mm) thick, with bent tab anchors. Temporarily fill or cover face opening of slots to prevent intrusion of concrete or debris.

2.11 REPAIR MATERIALS

A. Repair Underlayment: Cement-based, polymer-modified, self-leveling product that can be applied in thicknesses from 1/8 inch and that can be feathered at edges to match adjacent floor elevations.

1. Cement Binder: ASTM C 150, portland cement or hydraulic or blended hydraulic cement as defined in ASTM C 219.

2. Primer: Product of underlayment manufacturer recommended for substrate, conditions, and application.

3. Aggregate: Well-graded, washed gravel, 1/8 to 1/4 inch (3 to 6 mm) or coarse sand as recommended by underlayment manufacturer.

4. Compressive Strength: Not less than 4100 psi (29 MPa) at 28 days when tested according to ASTM C 109/C 109M.

B. Repair Topping: Traffic-bearing, cement-based, polymer-modified, self-leveling product that can be applied in thicknesses from 1/4 inch (6 mm).

1. Cement Binder: ASTM C 150, portland cement or hydraulic or blended hydraulic cement as defined in ASTM C 219.

2. Primer: Product of topping manufacturer recommended for substrate, conditions, and application.

3. Aggregate: Well-graded, washed gravel, 1/8 to 1/4 inch or coarse sand as recommended by topping manufacturer.

4. Compressive Strength: Not less than 5700 psi at 28 days when tested according to ASTM C 109/C 109M.

2.12 CONCRETE MIXES

A. Prepare design mixes for each type and strength of concrete determined by either laboratory trial mix or field test data bases, as follows:

1. Proportion normal-weight concrete according to ACI 211.1 and ACI 301.

B. Use a qualified independent testing agency for preparing and reporting proposed mix designs for the laboratory trial mix basis.

C. Footings and Foundation Walls: Proportion normal-weight concrete mix as follows:

1. Compressive Strength (28 Days): 3000 psi or 4000 psi.

2. Maximum Slump: 4 inches.

3. Maximum Slump for Concrete Containing High-Range Water-Reducing Admixture: 8 inches after admixture is added to concrete with 2- to 4-inch slump.

D. Slab-on-Grade: Proportion normal-weight concrete mix as follows:

1. Compressive Strength (28 Days): 3000 psi or 4000 psi.

2. Minimum Cementitious Materials Content: 470 lb/cu. yd.

3. Maximum Slump: 5 inches (125 mm).

E. Suspended Slabs: Proportion normal-weight concrete mix as follows:

1. Compressive Strength (28 Days): 4000 psi.

2. Maximum Slump: 4 inche.

F. Building Frame Members: Proportion normal-weight concrete mix as follows:

1. Compressive Strength (28 Days): 4000 psi.

2. Maximum Slump: 5 inches.

3. Maximum Slump for Concrete Containing High-Range Water-Reducing Admixture: 8 inches after admixture is added to concrete with 2- to 4-inch slump.

G. Cementitious Materials: For concrete exposed to deicers, limit percentage, by weight, of cementitious materials other than portland cement according to ACI 301 requirements.

H. Cementitious Materials: Limit percentage, by weight, of cementitious materials other than portland cement in concrete as follows:

1. Combined Fly Ash or Pozzolans, Ground Granulated Blast-Furnace Slag, and Silica Fume: 50 percent portland cement minimum, with fly ash or pozzolans not exceeding 25 percent and silica fume not exceeding 10 percent.

I. Maximum Water-Cementitious Materials Ratio: as specified in structural drawings.

J. Do not air entrain concrete to trowel-finished interior floors and suspended slabs. Do not allow entrapped air content to exceed 3 percent.

K. Limit water-soluble, chloride-ion content in hardened concrete to 0.15 percent by weight of cement.

L. Admixtures: Use admixtures according to manufacturer's written instructions.

1. Use water-reducing admixture or high-range water-reducing admixture (superplasticizer) in concrete, as required, for placement and workability.

2. Use water-reducing and retarding admixture when required by high temperatures, low humidity, or other adverse placement conditions.

3. Use corrosion-inhibiting admixture in concrete mixes where indicated.

2.13 FABRICATING REINFORCEMENT

A. Fabricate steel reinforcement according to CRSI's "Manual of Standard Practice."

2.14 CONCRETE MIXING

A. Ready-Mixed Concrete: Measure, batch, mix, and deliver concrete according to ASTM C 94, and furnish batch ticket information.

B. Ready-Mixed Concrete: Measure, batch, mix, and deliver concrete according to ASTM C 94 and ASTM C 1116, and furnish batch ticket information.

1. When air temperature is between 85 and 90 deg F, reduce mixing and delivery time from 1-1/2 hours to 75 minutes; when air temperature is above 90 deg F, reduce mixing and delivery time to 60 minutes.

PART3 EXECUTION

3.01 FORMWORK

A. Design, erect, shore, brace, and maintain formwork, according to ACI 301, to support vertical, lateral, static, and dynamic loads, and construction loads that might be applied, until concrete structure can support such loads.

B. Construct formwork so concrete members and structures are of size, shape, alignment, elevation, and position indicated, within tolerance limits of ACI 117.

C. Limit concrete surface irregularities, designated by ACI 347R as abrupt or gradual, as follows:

1. Class A, 1/8 inch.

D. Construct forms tight enough to prevent loss of concrete mortar.

E. Fabricate forms for easy removal without hammering or prying against concrete surfaces. Provide crush or wrecking plates where stripping may damage cast concrete surfaces. Provide top forms for inclined surfaces steeper than 1.5 horizontal to 1 vertical. Kerf wood inserts for forming keyways, reglets, recesses, and the like, for easy removal.

1. Do not use rust-stained steel form-facing material.

F. Set edge forms, bulkheads, and intermediate screed strips for slabs to achieve required elevations and slopes in finished concrete surfaces. Provide and secure units to support screed strips; use strike-off templates or compacting-type screeds.

G. Provide temporary openings for cleanouts and inspection ports where interior area of formwork is inaccessible. Close openings with panels tightly fitted to forms and securely braced to prevent loss of concrete mortar. Locate temporary openings in forms at inconspicuous locations.

H. Chamfer exterior corners and edges of permanently exposed concrete.

I. Form openings, chases, offsets, sinkages, keyways, reglets, blocking, screeds, and bulkheads required in the Work. Determine sizes and locations from trades providing such items.

J. Clean forms and adjacent surfaces to receive concrete. Remove chips, wood, sawdust, dirt, and other debris just before placing concrete.

K. Retighten forms and bracing before placing concrete, as required, to prevent mortar leaks and maintain proper alignment.

L. Coat contact surfaces of forms with form-release agent, according to manufacturer's written instructions, before placing reinforcement.

3.02 EMBEDDED ITEMS

A. Place and secure anchorage devices and other embedded items required for adjoining work that is attached to or supported by cast-in-place concrete. Use Setting Drawings, templates, diagrams, instructions, and directions furnished with items to be embedded.

1. Install anchor bolts, accurately located, to elevations required.

2. Install reglets to receive top edge of foundation sheet waterproofing and to receive through-wall flashings in outer face of concrete frame at exterior walls, where flashing is shown at lintels, shelf angles, and other conditions.

3. Install dovetail anchor slots in concrete structures as indicated.

3.03 REMOVING AND REUSING FORMS

A. General: Formwork, for sides of beams, walls, columns, and similar parts of the Work, that does not support weight of concrete may be removed after cumulatively curing at not less than 50 deg F for 24 hours after placing concrete provided concrete is hard enough to not be damaged by form-removal operations and provided curing and protection operations are maintained.

B. Leave formwork, for beam soffits, joists, slabs, and other structural elements, that supports weight of concrete in place until concrete has achieved the following:

1. At least 70 percent of 28-day design compressive strength.

2. Determine compressive strength of in-place concrete by testing representative field- or laboratory-cured test specimens according to ACI 301.

3. Remove forms only if shores have been arranged to permit removal of forms without loosening or disturbing shores.

C. Clean and repair surfaces of forms to be reused in the Work. Split, frayed, delaminated, or otherwise damaged form-facing material will not be acceptable for exposed surfaces. Apply new form-release agent.

D. When forms are reused, clean surfaces, remove fins and laitance, and tighten to close joints. Align and secure joints to avoid offsets. Do not use patched forms for exposed concrete surfaces unless approved by Architect.

3.04 SHORES AND RESHORES

A. Comply with ACI 318, ACI 301, and recommendations in ACI 347R for design, installation, and removal of shoring and reshoring.

B. In multistory construction, extend shoring or reshoring over a sufficient number of stories to distribute loads in such a manner that no floor or member will be excessively loaded or will induce tensile stress in concrete members without sufficient steel reinforcement.

C. Plan sequence of removal of shores and reshore to avoid damage to concrete. Locate and provide adequate reshoring to support construction without excessive stress or deflection.

3.05 VAPOR RETARDERS

A. Vapor Retarder: Place, protect, and repair vapor-retarder sheets according to ASTM E 1643 and manufacturer's written instructions.

B. Granular Fill: Cover vapor retarder with granular fill, moisten, and compact with mechanical equipment to elevation tolerances of plus 0 inch or minus 3/4 inch.

1. Place and compact a 1/2-inch thick layer of fine-graded granular material over granular fill.

3.06 STEEL REINFORCEMENT

A. General: Comply with CRSI's "Manual of Standard Practice" for placing reinforcement.

1. Do not cut or puncture vapor retarder. Repair damage and reseal vapor retarder before placing concrete.

B. Clean reinforcement of loose rust and mill scale, earth, ice, and other foreign materials.

C. Accurately position, support, and secure reinforcement against displacement. Locate and support reinforcement with bar supports to maintain minimum concrete cover. Do not tack weld crossing reinforcing bars.

1. Shop- or field-weld reinforcement according to AWS D1.4, where indicated.

D. Set wire ties with ends directed into concrete, not toward exposed concrete surfaces.

E. Install welded wire fabric in longest practicable lengths on bar supports spaced to minimize sagging. Lap edges and ends of adjoining sheets at least one mesh spacing. Offset laps of adjoining sheet widths to prevent continuous laps in either direction. Lace overlaps with wire.

3.07 JOINTS

A. General: Construct joints true to line with faces perpendicular to surface plane of concrete.

B. Construction Joints: Install so strength and appearance of concrete are not impaired, at locations indicated or as approved by Architect.

1. Place joints perpendicular to main reinforcement. Continue reinforcement across construction joints, unless otherwise indicated. Do not continue reinforcement through sides of strip placements of floors and slabs.

2. Form from preformed galvanized steel, plastic keyway-section forms, or bulkhead forms with keys, unless otherwise indicated. Embed keys at least 1-1/2 inches into concrete.

3. Locate joints for beams, slabs, joists, and girders in the middle third of spans. Offset joints in girders a minimum distance of twice the beam width from a beam-girder intersection.

4. Locate horizontal joints in walls and columns at underside of floors, slabs, beams, and girders and at the top of footings or floor slabs.

5. Space vertical joints in walls as indicated. Locate joints beside piers integral with walls, near corners, and in concealed locations where possible.

6. Use a bonding agent at locations where fresh concrete is placed against hardened or partially hardened concrete surfaces.

7. Use epoxy-bonding adhesive at locations where fresh concrete is placed against hardened or partially hardened concrete surfaces.

C. Contraction Joints in Slabs-on-Grade: Form weakened-plane contraction joints, sectioning concrete into areas as indicated. Construct contraction joints for a depth equal to at least one-fourth of concrete thickness, as follows:

1. Grooved Joints: Form contraction joints after initial floating by grooving and finishing each edge of joint to a radius of 1/8 inch. Repeat grooving of contraction joints after applying surface finishes. Eliminate groover tool marks on concrete surfaces.

2. Sawed Joints: Form contraction joints with power saws equipped with shatterproof abrasive or diamond-rimmed blades. Cut 1/8-inch-wide joints into concrete when cutting action will not tear, abrade, or otherwise damage surface and before concrete develops random contraction cracks.

D. Isolation Joints in Slabs-on-Grade: After removing formwork, install joint-filler strips at slab junctions with vertical surfaces, such as column pedestals, foundation walls, grade beams, and other locations, as indicated.

1. Extend joint-filler strips full width and depth of joint, terminating flush with finished concrete surface, unless otherwise indicated.

2. Terminate full-width joint-filler strips not less than 1/2 inch or more than 1 inch below finished concrete surface where joint sealants, specified in Division 7 Section "Joint Sealants," are indicated.

3. Install joint-filler strips in lengths as long as practicable. Where more than one length is required, lace or clip sections together.

E. Dowel Joints: Install dowel sleeves and dowels or dowel bar and support assemblies at joints where indicated.

1. Use dowel sleeves or lubricate or asphalt-coat one-half of dowel length to prevent concrete bonding to one side of joint.

3.07 WATERSTOPS

A. Flexible Waterstops: Install in construction joints as indicated to form a continuous diaphragm. Install in longest lengths practicable. Support and protect exposed waterstops during progress of Work. Field-fabricate joints in waterstops according to manufacturer's written instructions.

B. Self-Expanding Strip Waterstops: Install in construction joints and at other locations indicated, according to manufacturer's written instructions, bonding or mechanically fastening and firmly pressing into place. Install in longest lengths practicable.

3.08 CONCRETE PLACEMENT

A. Before placing concrete, verify that installation of formwork, reinforcement, and embedded items is complete and that required inspections have been performed.

B. Do not add water to concrete during delivery, at Project site, or during placement, unless approved by Architect.

C. Before placing concrete, water may be added at Project site, subject to limitations of ACI 301.

1. Do not add water to concrete after adding high-range water-reducing admixtures to mix.

D. Deposit concrete continuously or in layers of such thickness that no new concrete will be placed on concrete that has hardened enough to cause seams or planes of weakness. If a section cannot be placed continuously, provide construction joints as specified. Deposit concrete to avoid segregation.

E. Deposit concrete in forms in horizontal layers no deeper than 24 inches and in a manner to avoid inclined construction joints. Place each layer while preceding layer is still plastic, to avoid cold joints.

1. Consolidate placed concrete with mechanical vibrating equipment. Use equipment and procedures for consolidating concrete recommended by ACI 309R.

2. Do not use vibrators to transport concrete inside forms. Insert and withdraw vibrators vertically at uniformly spaced locations no farther than the visible effectiveness of the vibrator. Place vibrators to rapidly penetrate placed layer and at least 6 inches into preceding layer. Do not insert vibrators into lower layers of concrete that have begun to lose plasticity. At each insertion, limit duration of vibration to time necessary to consolidate concrete and complete embedment of reinforcement and other embedded items without causing mix constituents to segregate.

F. Deposit and consolidate concrete for floors and slabs in a continuous operation, within limits of construction joints, until placement of a panel or section is complete.

1. Consolidate concrete during placement operations so concrete is thoroughly worked around reinforcement and other embedded items and into corners.
2. Maintain reinforcement in position on chairs during concrete placement.
3. Screed slab surfaces with a straightedge and strike off to correct elevations.
4. Slope surfaces uniformly to drains where required.
5. Begin initial floating using bull floats or darbies to form a uniform and open-textured surface plane, free of humps or hollows, before excess moisture or bleedwater appears on the surface. Do not further disturb slab surfaces before starting finishing operations.

G. Hot-Weather Placement: Place concrete according to recommendations in ACI 305R and as follows, when hot-weather conditions exist:

1. Cool ingredients before mixing to maintain concrete temperature below 90 deg F (32 deg C) at time of placement. Chilled mixing water or chopped ice may be used to control temperature, provided water equivalent of ice is calculated to total amount of mixing water. Using liquid nitrogen to cool concrete is Contractor's option.
2. Cover steel reinforcement with water-soaked burlap so steel temperature will not exceed ambient air temperature immediately before embedding in concrete.
3. Fog-spray forms, steel reinforcement, and subgrade just before placing concrete. Keep subgrade moisture uniform without standing water, soft spots, or dry areas.

3.09 FINISHING FORMED SURFACES

A. Rough-Formed Finish: As-cast concrete texture imparted by form-facing material with tie holes and defective areas repaired and patched. Remove fins and other projections exceeding ACI 347R limits for class of surface specified.

B. Smooth-Formed Finish: As-cast concrete texture imparted by form-facing material, arranged in an orderly and symmetrical manner with a minimum of seams. Repair and patch tie holes and defective areas. Remove fins and other projections exceeding 1/8 inch in height.

1. Apply to concrete surfaces exposed to public view or to be covered with a coating or covering material applied directly to concrete, such as waterproofing, dampproofing, veneer plaster, or painting.

2. Do not apply rubbed finish to smooth-formed finish.

C. Rubbed Finish: Apply the following to smooth-formed finished concrete:

1. Smooth-Rubbed Finish: Not later than one day after form removal, moisten concrete surfaces and rub with carborundum brick or another abrasive until producing a uniform color and texture. Do not apply cement grout other than that created by the rubbing process.

2. Grout-Cleaned Finish: Wet concrete surfaces and apply grout of a consistency of thick paint to coat surfaces and fill small holes. Mix one part portland cement to one and one-half parts fine sand with a 1:1 mixture of bonding admixture and water. Add white portland cement in amounts determined by trial patches so color of dry grout will match adjacent surfaces. Scrub grout into voids and remove excess grout. When grout whitens, rub surface with clean burlap and keep surface damp by fog spray for at least 36 hours.

3. Cork-Floated Finish: Wet concrete surfaces and apply a stiff grout. Mix one part portland cement and one part fine sand with a 1:1 mixture of bonding agent and water. Add white portland cement in amounts determined by trial patches so color of dry grout will match adjacent surfaces. Compress grout into voids by grinding surface. In a swirling motion, finish surface with a cork float.

D. Related Unformed Surfaces: At tops of walls, horizontal offsets, and similar unformed surfaces adjacent to formed surfaces, strike off smooth and finish with a texture matching adjacent formed surfaces. Continue final surface treatment of formed surfaces uniformly across adjacent unformed surfaces, unless otherwise indicated.

3.10 FINISHING FLOORS AND SLABS

A. General: Comply with recommendations in ACI 302.1R for screeding, restraightening, and finishing operations for concrete surfaces. Do not wet concrete surfaces.

B. Scratch Finish: While still plastic, texture concrete surface that has been screeded and bull-floated or darbied. Use stiff brushes, brooms, or rakes.

1. Apply scratch finish to surfaces indicated and to surfaces to receive concrete floor topping or mortar setting beds for ceramic or quarry tile, portland cement terrazzo, and other bonded cementitious floor finishes.

C. Float Finish: Consolidate surface with power-driven floats or by hand floating if area is small or inaccessible to power driven floats. Restraighten, cut down high spots, and fill

low spots. Repeat float passes and restraightening until surface is left with a uniform, smooth, granular texture.

1. Apply float finish to surfaces indicated, to surfaces to receive trowel finish, and to floor and slab surfaces to be covered with fluid-applied or sheet waterproofing, built-up or membrane roofing, or sand-bed terrazzo.

D. Trowel Finish: After applying float finish, apply first trowel finish and consolidate concrete by hand or power-driven trowel. Continue troweling passes and restraighten until surface is free of trowel marks and uniform in texture and appearance. Grind smooth any surface defects that would telegraph through applied coatings or floor coverings.

1. Apply a trowel finish to surfaces indicated and to floor and slab surfaces exposed to view or to be covered with resilient flooring, carpet, ceramic or quarry tile set over a cleavage membrane, paint, or another thin film-finish coating system

2. Finish surfaces to the following tolerances, measured within 24 hours according to ASTM E 1155/E 1155M for a randomly trafficked floor surface:

   a. Specified overall values of flatness, F(F) 35; and levelness, F(L) 25; with minimum local values of flatness, F(F) 24; and levelness, F(L) 17; for slabs-on-grade.

   b. Specified overall values of flatness, F(F) 30; and levelness, F(L) 20; with minimum local values of flatness, F(F) 24; and levelness, F(L) 15; for suspended slabs.

3. Finish and measure surface so gap at any point between concrete surface and an unleveled freestanding 10-foot- long straightedge, resting on two high spots and placed anywhere on the surface, does not exceed the following:

   a. 3/16 inch.

E. Trowel and Fine-Broom Finish: Apply a partial trowel finish, stopping after second troweling, to surfaces indicated and to surfaces where ceramic or quarry tile is to be installed by either thickset or thin-set method. Immediately after second troweling, and when concrete is still plastic, slightly scarify surface with a fine broom.

F. Broom Finish: Apply a broom finish to exterior concrete platforms, steps, and ramps, and elsewhere as indicated.

1. Immediately after float finishing, slightly roughen trafficked surface by brooming with fiber-bristle broom perpendicular to main traffic route. Coordinate required final finish with Architect before application.

G. Slip-Resistive Aggregate Finish: Before final floating, apply slip-resistive aggregate finish where indicated and to concrete stair treads, platforms, and ramps. Apply according to manufacturer's written instructions and as follows:

1. Uniformly spread 25 lb/100 sq. ft. of dampened slip-resistive aggregate over surface in one or two applications. Tamp aggregate flush with surface, but do not force below surface.

2. After broadcasting and tamping, apply float finish.

3. After curing, lightly work surface with a steel wire brush or an abrasive stone, and water to expose slip-resistive aggregate.

H. Mineral Dry-Shake Floor Hardener Finish: After initial floating, apply mineral dry-shake materials to surfaces according to manufacturer's written instructions and as follows:

1. Uniformly apply mineral dry-shake materials at a rate of 100 lb/100 sq. ft., unless greater amount is recommended by manufacturer.

2. Uniformly distribute approximately two-thirds of mineral dry-shake materials over surface by hand or with mechanical spreader, and embed by power floating. Follow power floating with a second mineral dry-shake application, uniformly distributing remainder of material, and embed by power floating.

3. After final floating, apply a trowel finish. Cure concrete with curing compound recommended by dry-shake material manufacturer and apply immediately after final finishing.

3.11 MISCELLANEOUS CONCRETE ITEMS

A. Filling In: Fill in holes and openings left in concrete structures, unless otherwise indicated, after work of other trades is in place. Mix, place, and cure concrete, as specified, to blend with in-place construction. Provide other miscellaneous concrete filling indicated or required to complete Work.

B. Curbs: Provide monolithic finish to interior curbs by stripping forms while concrete is still green and by steel-troweling surfaces to a hard, dense finish with corners, intersections, and terminations slightly rounded.

C. Equipment Bases and Foundations: Provide machine and equipment bases and foundations as shown on Drawings. Set anchor bolts for machines and equipment at correct elevations, complying with diagrams or templates of manufacturer furnishing machines and equipment.

D. Steel Pan Stairs: Provide concrete fill for steel pan stair treads, landings, and associated items. Cast-in inserts and accessories as shown on Drawings. Screed, tamp, and trowel-finish concrete surfaces.

3.12 CONCRETE PROTECTION AND CURING

A. General: Protect freshly placed concrete from premature drying and excessive cold or hot temperatures. Comply with recommendations in ACI 305R for hot-weather protection during curing.

B. Evaporation Retarder: Apply evaporation retarder to unformed concrete surfaces if hot, dry, or windy conditions cause moisture loss approaching 0.2 lb/sq. ft. x h before and during finishing operations. Apply according to manufacturer's written instructions after placing, screeding, and bull floating or darbying concrete, but before float finishing.

C. Formed Surfaces: Cure formed concrete surfaces, including underside of beams, supported slabs, and other similar surfaces. If forms remain during curing period, moist cure after loosening forms. If removing forms before end of curing period, continue curing by one or a combination of the following methods:

D. Unformed Surfaces: Begin curing immediately after finishing concrete. Cure unformed surfaces, including floors and slabs, concrete floor toppings, and other surfaces, by one or a combination of the following methods:

1. Moisture Curing: Keep surfaces continuously moist for not less than seven days with the following materials:

    a. Water.

2. Moisture-Retaining-Cover Curing: Cover concrete surfaces with moisture-retaining cover for curing concrete, placed in widest practicable width, with sides and ends lapped at least 12 inches, and sealed by waterproof tape or adhesive. Cure for not less than seven days. Immediately repair any holes or tears during curing period using cover material and waterproof tape.

    a. Cure concrete surfaces to receive floor coverings with either a moisture-retaining cover or a curing compound that the manufacturer recommends for use with floor coverings.

3. Curing Compound: Apply uniformly in continuous operation by power spray or roller according to manufacturer's written instructions. Recoat areas subjected to heavy rainfall within three hours after initial application. Maintain continuity of coating and repair damage during curing period.

4. Curing and Sealing Compound: Apply uniformly to floors and slabs indicated in a continuous operation by power spray or roller according to manufacturer's written instructions. Recoat areas subjected to heavy rainfall within three hours after initial application. Repeat process 24 hours later and apply a second coat. Maintain continuity of coating and repair damage during curing period.

3.13 LIQUID FLOOR TREATMENTS

A. Penetrating Liquid Floor Treatment: Prepare, apply, and finish penetrating liquid floor treatment according to manufacturer's written instructions.

1. Remove curing compounds, sealers, oil, dirt, laitance, and other contaminants and complete surface repairs.

2. Do not apply to concrete that is less than seven days old.

3. Apply liquid until surface is saturated, scrubbing into surface until a gel forms; rewet; and repeat brooming or scrubbing. Rinse with water; remove excess material until surface is dry. Apply a second coat in a similar manner if surface is rough or porous.

B. Sealing Coat: Uniformly apply a continuous sealing coat of curing and sealing compound to hardened concrete by power spray or roller according to manufacturer's written instructions.

3.14 JOINT FILLING

A. Prepare, clean, and install joint filler according to manufacturer's written instructions.

1. Defer joint filling until concrete has aged at least six months. Do not fill joints until construction traffic has permanently ceased.

B. Remove dirt, debris, saw cuttings, curing compounds, and sealers from joints; leave contact faces of joint clean and dry.

C. Install semirigid epoxy joint filler full depth in saw-cut joints and at least 2 inches (50 mm) deep in formed joints. Overfill joint and trim joint filler flush with top of joint after hardening.

3.15 CONCRETE SURFACE REPAIRS

A. Defective Concrete: Repair and patch defective areas when approved by Architect. Remove and replace concrete that cannot be repaired and patched to Architect's approval.

B. Patching Mortar: Mix dry-pack patching mortar, consisting of one part portland cement to two and one-half parts fine aggregate passing a No. 16 sieve, using only enough water for handling and placing.

C. Repairing Formed Surfaces: Surface defects include color and texture irregularities, cracks, spalls, air bubbles, honeycombs, rock pockets, fins and other projections on the surface, and stains and other discolorations that cannot be removed by cleaning.

1. Immediately after form removal, cut out honeycombs, rock pockets, and voids more than 1/2 inch in any dimension in solid concrete but not less than 1 inch (25 mm) in depth. Make edges of cuts perpendicular to concrete surface. Clean, dampen with water, and brush-coat holes and voids with bonding agent. Fill and compact with patching mortar before bonding agent has dried. Fill form-tie voids with patching mortar or cone plugs secured in place with bonding agent.

2. Repair defects on surfaces exposed to view by blending white portland cement and standard portland cement so that, when dry, patching mortar will match surrounding color. Patch a test area at inconspicuous locations to verify mixture and color match before proceeding with patching. Compact mortar in place and strike off slightly higher than surrounding surface.

3. Repair defects on concealed formed surfaces that affect concrete's durability and structural performance as determined by Architect.

D. Repairing Unformed Surfaces: Test unformed surfaces, such as floors and slabs, for finish and verify surface tolerances specified for each surface. Correct low and high areas. Test surfaces sloped to drain for trueness of slope and smoothness; use a sloped template.

1. Repair finished surfaces containing defects. Surface defects include spalls, popouts, honeycombs, rock pockets, crazing and cracks in excess of 0.01 inch wide or that penetrate to reinforcement or completely through unreinforced sections regardless of width, and other objectionable conditions.

2. After concrete has cured at least 14 days, correct high areas by grinding.

3. Correct localized low areas during or immediately after completing surface finishing operations by cutting out low areas and replacing with patching mortar. Finish repaired areas to blend into adjacent concrete.

4. Correct other low areas scheduled to receive floor coverings with a repair underlayment. Prepare, mix, and apply repair underlayment and primer according to manufacturer's written instructions to produce a smooth, uniform, plane, and level surface. Feather edges to match adjacent floor elevations.

5. Correct other low areas scheduled to remain exposed with a repair topping. Cut out low areas to ensure a minimum repair topping depth of 1/4 inch to match adjacent floor elevations. Prepare, mix, and apply repair topping and primer according to manufacturer's written instructions to produce a smooth, uniform, plane, and level surface.

6. Repair defective areas, except random cracks and single holes 1 inch or less in diameter, by cutting out and replacing with fresh concrete. Remove defective areas with clean, square cuts and expose steel reinforcement with at least 3/4 inch clearance all around. Dampen concrete surfaces in contact with patching concrete and apply bonding agent. Mix patching concrete of same materials and mix as original concrete except without coarse aggregate. Place, compact, and finish to blend with adjacent finished concrete. Cure in same manner as adjacent concrete.

7. Repair random cracks and single holes 1 inch or less in diameter with patching mortar. Groove top of cracks and cut out holes to sound concrete and clean off dust, dirt, and loose particles. Dampen cleaned concrete surfaces and apply bonding agent. Place patching mortar before bonding agent has dried. Compact patching mortar and finish to match adjacent concrete. Keep patched area continuously moist for at least 72 hours.

E. Perform structural repairs of concrete, subject to Architect's approval, using epoxy adhesive and patching mortar.

F. Repair materials and installation not specified above may be used, subject to Architect's approval.

3.16 FIELD QUALITY CONTROL

A. Testing Agency: Owner will engage a qualified independent testing and inspecting agency to sample materials, perform tests, and submit test reports during concrete placement. Sampling and testing for quality control may include those specified in this Article.

B. Testing Services: Testing of composite samples of fresh concrete obtained according to ASTM C 172 shall be performed according to the following requirements:

1. Testing Frequency: Obtain one composite sample for each day's pour of each concrete mix exceeding 5 cu. yd., but less than 25 cu. yd., plus one set for each additional 50 cu. yd. or fraction thereof.

    a. When frequency of testing will provide fewer than five compressive-strength tests for each concrete mix, testing shall be conducted from at least five randomly selected batches or from each batch if fewer than five are used.

2. Slump: ASTM C 143; one test at point of placement for each composite sample, but not less than one test for each day's pour of each concrete mix. Perform additional tests when concrete consistency appears to change.

3. Compression Test Specimens: ASTM C 31; cast and laboratory cure one set of six standard cylinder specimens for each composite sample.

    a. Cast and field cure one set of six standard cylinder specimens for each composite sample.

4. Compressive-Strength Tests: ASTM C 39; test 3 laboratory-cured specimens at 7 days and 3 at 28 days.

C. Strength of each concrete mix will be satisfactory if every average of any three consecutive compressive-strength tests equals or exceeds specified compressive strength and no compressive-strength test value falls below specified compressive strength by more than 500 psi (3.4 MPa).

D. Test results shall be reported in writing to Architect, and Contractor within 48 hours of testing. Reports of compressive-strength tests shall contain Project identification name and number, date of concrete placement, name of concrete testing and inspecting agency, location of concrete batch in Work, design compressive strength at 28 days, concrete mix proportions and materials, compressive breaking strength, and type of break for both 7-and 28-day tests.

E. Additional Tests: Testing and inspecting agency shall make additional tests of concrete when test results indicate that slump, air entrainment, compressive strengths, or other requirements have not been met, as directed by Architect. Testing and inspecting agency may conduct tests to determine adequacy of concrete by cored cylinders complying with ASTM C 42 or by other methods as directed by Architect.

END OF SECTION

SECTION 03542 - HYDRAULIC-CEMENT-BASED UNDERLAYMENT

PART 1 - GENERAL

1.1 RELATED DOCUMENTS

A. Drawings and general provisions of the Contract, including General and Supplementary Conditions and Division 1 Specification Sections, apply to this Section.

1.2 SUMMARY

A. This Section includes hydraulic-cement-based underlayment for use below interior floor coverings.

B. Related Sections include the following:

1. Division 9 Sections for patching and leveling compounds applied with floor coverings.

C. Allowances: Furnish hydraulic-cement-based underlayment under the allowances specified in Division 1 Section "Allowances."

D. Unit Prices: Administrative and procedural requirements for unit prices are specified in Division 1 Section "Unit Prices."

1.3 SUBMITTALS

A. Product Data: For each type of product indicated.

B. Shop Drawings: Plans indicating substrates, locations, and average depths of underlayment based on survey of substrate conditions.

C. Manufacturer Certificates: Signed by manufacturers of both underlayment and floor covering system certifying that products are compatible.

D. Qualification Data: For Installer.

E. Minutes of preinstallation conference.

1.4 QUALITY ASSURANCE

A. Installer Qualifications: Installer who is approved by manufacturer for application of underlayment products required for this Project.

B. Product Compatibility: Manufacturers of both underlayment and floor covering system certify in writing that products are compatible.

C. Mockups: Apply hydraulic-cement-based underlayment mockups to demonstrate surface finish, bonding, texture, tolerances, and standard of workmanship.

1. Apply mockups approximately 100 sq. ft. (9 sq. m) in area in location indicated or, if not indicated, as directed by Architect.
2. Approved mockups may become part of the completed Work if undisturbed at time of Substantial Completion.

D. Preinstallation Conference: Conduct conference at Project site to comply with requirements in Division 1 Section "Project Management and Coordination."

1.5 DELIVERY, STORAGE, AND HANDLING

A. Store materials to comply with manufacturer's written instructions to prevent deterioration from moisture or other detrimental effects.

1.6 PROJECT CONDITIONS

A. Environmental Limitations: Comply with manufacturer's written instructions for substrate temperature, ambient temperature and humidity, ventilation, and other conditions affecting underlayment performance.

1. Place hydraulic-cement-based underlayments only when ambient temperature and temperature of substrates are between 50 and 80 deg F (10 and 27 deg C).

1.7 COORDINATION

A. Coordinate application of underlayment with requirements of floor covering products, including adhesives, specified in Division 9 Sections, to ensure compatibility of products.

PART 2 - PRODUCTS

2.1 HYDRAULIC-CEMENT-BASED UNDERLAYMENTS

A. Underlayment: Hydraulic-cement-based, polymer-modified, self-leveling product that can be applied in minimum uniform thicknesses of 1/8 inch (3 mm) and that can be feathered at edges to match adjacent floor elevations.

1. Available Products: Subject to compliance with requirements, products that may be incorporated into the Work include, but are not limited to, the following:
2. Products: Subject to compliance with requirements, provide one of the following:

a. Ardex; [**K-15 Self-Leveling Underlayment Concrete**] <**Insert product name or designation**>.
b. Bonsal, W. R. Company; [**Self-Leveling Underlayment**] <**Insert product name or designation**>.

c. ChemRex; [**MBT Mastertop 110 Plus Underlayment**] [**Sonneborn Sonocrete Sonoflow**] [**Thoro Underlayment, Self-Leveling**] <**Insert product name or designation**>.
d. Conspec, a Dayton Superior Company; [**Conflow**] <**Insert product name or designation**>.
e. Dayton Superior Corporation; [**LeveLayer I**] <**Insert product name or designation**>.
f. Dependable Chemical Co., Inc.; [**Skimflow ES**] <**Insert product name or designation**>.
g. L&M Construction Chemicals, Inc.; [**Levelex**] <**Insert product name or designation**>.
h. MAPEI Corporation; [**Ultraplan 1**] <**Insert product name or designation**>.
i. Maxxon Corporation; [**Level-Right**] <**Insert product name or designation**>.
j. US Mix Products Company; [**US SPEC Self - Leveling Underlayment**] <**Insert product name or designation**>.
k. <**Insert manufacturer's name; product name or designation.**>

3. Cement Binder: ASTM C 150, portland cement, or hydraulic or blended hydraulic cement as defined by ASTM C 219.
4. Compressive Strength: Not less than [**4100 psi (28 MPa)**] <**Insert value**> at 28 days when tested according to ASTM C 109/C 109M.
5. Underlayment Additive: Resilient-emulsion product of underlayment manufacturer formulated for use with underlayment when applied to substrate and conditions indicated.

B. Aggregate: Well-graded, washed gravel, 1/8 to 1/4 inch (3 to 6 mm); or coarse sand as recommended by underlayment manufacturer.

1. Provide aggregate when recommended in writing by underlayment manufacturer for underlayment thickness required.

C. Water: Potable and at a temperature of not more than 70 deg F (21 deg C).

D. Reinforcement: For underlayment applied to wood substrates, provide galvanized metal lath or other corrosion-resistant reinforcement recommended in writing by underlayment manufacturer.

E. Primer: Product of underlayment manufacturer recommended in writing for substrate, conditions, and application indicated.

F. Corrosion-Resistant Coating: Recommended in writing by underlayment manufacturer for metal substrates.

PART 3 - EXECUTION

3.1 EXAMINATION

A. Examine substrates, with Installer present, for conditions affecting performance.

1. Proceed with application only after unsatisfactory conditions have been corrected.

3.2 PREPARATION

A. General: Prepare and clean substrate according to manufacturer's written instructions.

1. Treat nonmoving substrate cracks according to manufacturer's written instructions to prevent cracks from telegraphing (reflecting) through underlayment.
2. Fill substrate voids to prevent underlayment from leaking.

B. Concrete Substrates: Mechanically remove, according to manufacturer's written instructions, laitance, glaze, efflorescence, curing compounds, form-release agents, dust, dirt, grease, oil, and other contaminants that might impair underlayment bond.

1. Moisture Testing: Perform anhydrous calcium chloride test, ASTM F 1869. Proceed with installation only after substrates do not exceed a maximum moisture-vapor-emission rate of [**3 lb of water/1000 sq. ft. (1.36 kg of water/100 sq. m)**] <**Insert emission**> in 24 hours.

C. Wood Substrates: Mechanically fasten loose boards and panels to eliminate substrate movement and squeaks. Sand to remove coatings that might impair underlayment bond and remove sanding dust.

1. Install underlayment reinforcement recommended in writing by manufacturer.

D. Metal Substrates: Mechanically remove, according to manufacturer's written instructions, rust, foreign matter, and other contaminants that might impair underlayment bond. Apply corrosion-resistant coating compatible with underlayment if recommended in writing by underlayment manufacturer.

E. Nonporous Substrates: For ceramic tile, quarry tile, and terrazzo substrates, remove waxes, sealants, and other contaminants that might impair underlayment bond, and prepare surfaces according to manufacturer's written instructions.

F. Adhesion Tests: After substrate preparation, test substrate for adhesion with underlayment according to manufacturer's written instructions.

3.3 APPLICATION

A. General: Mix and apply underlayment components according to manufacturer's written instructions.

1. Close areas to traffic during underlayment application and for time period after application recommended in writing by manufacturer.
2. Coordinate application of components to provide optimum underlayment-to-substrate and intercoat adhesion.
3. At substrate expansion, isolation, and other moving joints, allow joint of same width to continue through underlayment.

B. Apply primer over prepared substrate at manufacturer's recommended spreading rate.

C. Apply underlayment to produce uniform, level surface.

1. Apply a final layer without aggregate to produce surface.
2. Feather edges to match adjacent floor elevations.

D. Cure underlayment according to manufacturer's written instructions. Prevent contamination during application and curing processes.

E. Do not install floor coverings over underlayment until after time period recommended in writing by underlayment manufacturer.

F. Remove and replace underlayment areas that evidence lack of bond with substrate, including areas that emit a "hollow" sound when tapped.

3.4 PROTECTION

A. Protect underlayment from concentrated and rolling loads for remainder of construction period.

END OF SECTION 03542

SECTION 03600 - GROUT

PART 1 - GENERAL

1.01 DESCRIPTION

A. Scope:
1. CONTRACTOR shall provide all labor, materials, equipment, and incidentals as shown, specified and required to furnish and install grout.
2. Grout shall be placed at the following locations:
a. Column and beam bearing.
b. Equipment bases.
c. Handrails and railings.
d. Construction joints.
e. Intrusion grouting.
3. The types of grout include the following:
a. Non-shrink, epoxy type.
b. Non-shrink, non-metallic type.
c. Ordinary cement-sand.

B. Classes of Ordinary Cement Type Grout:
1. Class "A" ordinary cement type grout shall have a compression strength of 4000 PSI and include the following:
a. Foundation grout.
b. Construction joint grout.

C. Related Sections:
1. Section 03251, Expansion Joints
2. Section 03300, Cast-In-Place Concrete
3. Section 04100, Mortar
4. Section 05120, Structural Steel

1.02 QUALITY ASSURANCE

A. Reference Standards: Comply with applicable provisions and recommendations of the following, except as otherwise shown or specified.
1. ASTM C 144, Standard Specification for Aggregate for Masonry Mortar.
2. ASTM C 150, Standard Specification for Portland Cement.
3. CRD-C-619, Specification for Grout Fluidifier.
4. CRD-C-621, Specification for Non-Shrink Grout.

1.03 SUBMITTALS

A. Shop Drawings: Submit for approval the following:
1. Manufacturer's specifications and installation instructions for all proprietary materials.
2. For ordinary cement grout, copies of grout design mix and laboratory test reports for grout strength tests.

B. Reports and Certificates:
1. For proprietary materials, submit copies of reports on quality control tests.
2. Submit certification that materials meet specification requirements for nonproprietary materials.

1.04 PRODUCT DELIVERY, STORAGE AND HANDLING

A. Delivery of Materials: Grout materials from manufacturers shall be delivered in unopened containers and shall bear intact manufacturer's labels.

B. Storage of Materials: Grout materials shall be stored in a dry shelter and shall be protected from moisture.

PART 2 - PRODUCTS

2.01 MATERIALS

A. Non-shrink, Nonmetallic Grout:
1. Prepackaged non-staining cementious grout which shall meet the minimum requirements of CRD C-621 and requiring only the addition of water at the jobsite.
2. Product and Manufacturer: Provide one of the following:
a. Euco N-S, as manufactured by The Euclid Chemical Company.
b. Masterflow 928, as manufactured by Master Builders, Incorporated.
c. Sika Grout 212, as manufactured by Sika Corporation.
d. Or equal.

PART 3 - EXECUTION

3.01 INSPECTION

A. CONTRACTOR and his installer shall examine the substrate and conditions under which grout is to be placed, and notify ENGINEER in writing of unsatisfactory conditions. Do not proceed with the Work until unsatisfactory conditions have been corrected in a manner acceptable to ENGINEER.

3.02 INSTALLATION

A. General:
1. Place grout as shown and in accordance with manufacturer's instructions. If manufacturer's instructions conflict with the Specifications do not proceed until ENGINEER provides clarification.
2. Drypacking will not be permitted.
3. Manufacturers of proprietary products shall make available upon 72 hours notification the services of a qualified, full time employee to aid in assuring proper use of the product under job conditions.
4. Placing grout shall conform to temperature and weather limitations in Section 03300.

B. Columns, Beams and Equipment Bases:
After shimming columns, beams and equipment to proper grade, securely tighten anchor bolts. Properly form around the base plates allowing sufficient room around the edges for placing the grout. Adequate depth between the bottom of the base plate and the top of concrete base must be provided to assure that the void is completely filled with the non-shrink, non-metallic grout.

C. Construction Joints:
Place a 2-inch thick coat of ordinary cement grout over the contact surface of the old concrete at the interface of horizontal construction joints as outlined in Section 03251 and Section 03300 of these Specifications.

END OF SECTION

SECTION 03900
CONCRETE RESTORATION AND CLEANING

PART 1 GENERAL

1.01 SECTION INCLUDES

A. Furnishing of all labor, material, equipment, supervision, and incidentals as necessary to perform the restoration to the concrete surfaces as shown on the Drawings and specified herein. The concrete repair shall include:

1. Repair of cracked and deteriorated concrete coating.

2. Repair of concrete foundation cracks.

3. Apply coating to concrete foundation.

B. Location

1. The Contractor shall carefully review the accompanying set of Drawings for specific location delineation of each type of repair. Although attempts were made to delineate all repair areas on the Drawings, additional repair areas may be identified in the field.

2. The Contractor shall be responsible for extent and identifying the exact location of all necessary repairs.

1.02 QUALITY ASSURANCE

A. Qualification of Manufacturer

Products used in the work of this section shall be produced by manufacturers regularly engaged in manufacturer of similar items and with a history of successful production acceptable to the Architect/Engineer.

B. Qualification of workmen

1. Use skilled workmen who are thoroughly trained and experienced in the necessary crafts and who are completely familiar with he specified requirements and methods needed for proper performance of the work.

2. In acceptance or rejection of the work, the Architect/Engineer will make no allowance for lack of skill on the part of the workmen.

C. Architect/Engineer Observations

1. The Architect/Engineer intends to review prepared areas for suitable preparation prior to installing any patch material. The Contractor shall, therefore, coordinate his patching efforts with the Architect/Engineer.

2. Areas not meeting the Architect/Engineer's satisfactory review shall be further prepared.

SECTION 03900
CONCRETE RESTORATION AND CLEANING

1.03 SUBMITTALS

A. Submit Product Data Under Provisions of Division 01.

1. Epoxy materials

2. Polymer mortar

3. Liquid bonding and admixture agents.

4. Joint sealant

5. Concrete Coating

1.04 DELIVERY, STORAGE AND HANDLING

A. All materials shall be delivered to the job site and stored in the manufacturer's sealed, undamaged containers. Each container shall be identified with material name, date of manufacture, and lot number. Storage shall be as recommended by the manufacturer for preventing damage.

1.05 PROJECT CONDITIONS

A. Environmental Conditions

The Contractor shall install the materials only when all of the following criteria can be met, or as otherwise recommended by the product manufacturer:

1. Surface receiving material shall be dry or damp (epoxy application).

2. Substrate surface temperature is above 50°F and lower than 110°F during and seven days after completion of work.

B. Safety Requirements

1. Open fires and spark producing equipment shall not be in the application area until vapors have dissipated.

2. Post No Smoking signs in area during and for at least eight hours following application period.

3. Strictly adhere to special requirements of manufacturer as modified by applicable rules and regulations of local, state, and Federal authorities having jurisdiction.

SECTION 03900
CONCRETE RESTORATION AND CLEANING

PART 2 PRODUCTS

2.01 MATERIALS

A. Cement:

1. All cement used in the patching mixtures shall meet the requirements of ASTM C150, Type I.

B. Aggregates:

1. Aggregates used in the concrete and shotcrete mixtures shall be clean sharp concrete mix (3/8 in. maximum aggregate) sand with no dust and shall meet the requirements of ASTM C33.

2. The source of the aggregate shall be subject to the approval of the Architect/Engineer.

C. Admixtures:

1. Water Reducing Admixture shall conform to the requirements of ASTM C494 and shall be used strictly in accordance with the manufacturer's recommendations.

D. Epoxy Materials: All epoxy materials used on the job shall be 100% solid, two-component, moisture-insensitive materials as manufactured by the Sika Chemical Corporation, Protex Industries, or approved equivalent. The following products or approved substitutions shall be used:

1. Sonobond by Sonneborn

2. SIKA DUR 32, Hi-Mod by SIKA

E. Manufactured Polymer-Modified Mortar: Shall be pre-manufactured, cementitious repair compounds. The following or approved substitutes shall be used:

1. Sonopatch by Sonneborn

2. Sikatop 122 Repair Mortar by SIKA

F. Liquid bonding agents and admixtures shall be acrylic latex or polymer. The following or approved substitutes shall be used:

1. Sonocrete by Sonneborn

2. Acryl 60 by Thoro

3. Acrylic Admix 101 by Larsen

G. Joint Sealant: One part polyurethane sealants, Sonolastic NP 1 by Sonneborn, SIKAFLEX-1a by SIKA, or approved substitute.

H. Accessories

1. Reinforcing bars shall conform to ASTM 615, grade 60 and be epoxy coated.

2. Welded wire fabrics shall conform to ASTM A185, be galvanized and be size 2x2 - WO.9 x WO.9 unless noted otherwise on the Drawings.

3. Expansion Anchors shall be Wej-It or approved equivalent. Anchors shall have equivalent or greater pullout and shear values as Wej-It. Anchor, washers, and nuts shall be hot-dipped galvanized.

4. Metal primer shall be as recommended by the elastomeric coating manufacturer for use as a primer to coating application.

2.02 PATCHING MATERIALS

A. General

1. Shallow spalls (3/4 in. average or less) shall be repaired by either of the following material:

a. Manufactured Polymer Modified Mortar.

b. Concrete mixture with liquid bonding and admixture agent. Mix agent at 2:1 ratio with water or as recommended by the material supplier.

2. Deep spalls (greater than 3/4 in. average depth) shall be repaired by either of the following methods:

a. Concrete mixtures bonded with epoxy resins.

b. Shotcrete bonded with slurry coat.

B. Polymer Mortar

1. Mix dry component to liquid component per manufacturer's recommendations.

C. Concrete Mixture

1. Compressive strength - 4,000 psi (28 day minimum).

2. Aggregates - 3/8 maximum size, well graded from coarse to fine passing 100 through a 3/8 sieve.

3. Slump - Two to three inches.

SECTION 03900
CONCRETE RESTORATION AND CLEANING

2.03 EQUIPMENT

A. General

It is the Contractor's responsibility to determine and use the equipment necessary for performing the work covered by this section.

PART 3 EXECUTION

3.01 TYPICAL SPALLED AND DAMAGED CONCRETE REPAIR PROCEDURE

A. General: The procedure given below is general and may vary slightly for each individual repair. Refer to the details for the procedural steps for individual repair items.

B. Removal

1. The exact locations of the spall and damaged concrete repairs will be determined in the field by the Contractor and reviewed by the Architect/Engineer at the time of construction.

2. For top surfaces of slabs, the Contractor will outline the area of spalled concrete to be removed by making a 1-in. deep sawcut around the perimeter of the spalled area. Corners of cuts shall be approximately 90 degree angles.

3. All loose and unsound concrete shall be removed with pneumatic jack hammers.

4. If sound concrete is reached before exposing more than 50% of the reinforcing steel, the removal shall be continued to a depth that will allow 3/4 of the reinforcing steel to be exposed.

5. If rusting of the reinforcing steel is evident, removal shall continue until the entire bar(s) has a clear distance exposure of 3/4-in. all around or as required to permit proper cleaning of the reinforcing.

C. Surface Preparation

1. All rusted reinforcement and rust stained concrete shall be sandblasted to shiny metal and clean concrete respectively.

2. The cavity shall then be blown clean with compressed air to assure that all loose particles have been removed.

3. Immediately coat exposed reinforcing with epoxy rebar coating materials.

4. Reinforcing bars which have lost more than 30% of their area due to corrosion shall be lap spliced with new reinforcement of the same size as the original bar. New reinforcement shall lap at least 30 bar diameters into good existing reinforcement.

5. Install new reinforcing bars and/or welded wire fabric in accordance with procedures given on the Drawings for each repair item. Allow rebar coating to become tack free prior to placing patch material.

6. The prepared cavity shall be inspected and approved by the Architect/Engineer prior to placing any bonding agent or patch material. Allow rebar coating to become tack free prior to placing patch material.

D. Installation

1. Polymer Mortar

   a. Use the liquid component as a priming material applied directly to the prepared concrete substrate. Apply at a rate recommended by the manufacturer.

   b. Immediately fill the void with polymer mortar specified above and compact into place.

2. Concrete Mixture With Liquid Bonding Agents

   a. Mix agent with mix water in a ratio as recommended by agent supplier.

   b. Apply bonding agent or scrub coat as recommended by agent supplier to prepared surface.

   c. Fill the void with concrete mixture and compact into place.

3. Concrete Mixture Bonded with Epoxy

   a. The approved cavity shall be coated evenly and completely with the epoxy bonding material. The amount of application shall be as recommended by the manufacturer of the epoxy.

   b. A concrete mixture as specified above shall immediately be worked into the cavity and adequately compacted to assure that no voids remain in the patch.

E. Finish

1. The surface shall be leveled to true, straight lines with screed or wood float.

2. The surface finish shall be brushed and/or sponged as required to match the texture of existing adjacent surfaces as close as possible.

3. Strike lines are located on the existing surface in an approximate 1 ft. x 3 ft. pattern. New lines shall be continued throughout the new patches and where required to match existing.

3.02 RANDOM CRACK AND CONSTRUCTION JOINT REPAIR PROCEDURE

A. Preparation

1. Route all random cracks to a depth of 1/2 in. and width of 1/2 inch. Remove sealant from construction joints with appropriate tools. Refer to detail on Plans.

2. Sandblast the routed crack or joint and 6 in. on each side of the crack or joint if this has not been previously accomplished under other sections.

3. Blow clean with compressed air.

4. If concrete deterioration exceeds the dimensions indicated above, remove all unsound concrete and rebuild the joints or cracks to the dimensions indicated above utilizing the spall repair procedures above.

B. Installation

1. Fill all cracks and joints with sealant in a manner recommended by the manufacturer of the sealant used on the job. Use a primer material prior to installing the sealant if recommended by the manufacturer of the sealant.

END OF SECTION 03900

SECTION 03930 - CONCRETE REHABILITATION

PART 1 - GENERAL

1.1 RELATED DOCUMENTS

A. Drawings and general provisions of the Contract, including General and Supplementary Conditions and Division 1 Specification Sections, apply to this Section.

1.2 SUMMARY

A. This Section includes the following:

1. Removal of deteriorated concrete and reinforcement and subsequent replacement and patching.
2. Floor joint repair.
3. Epoxy crack injection.
4. Corrosion-inhibiting treatment.
5. Polymer overlays.
6. Polymer sealers.
7. Steel structural reinforcement.
8. Composite structural reinforcement.

B. Related Sections include the following:

1. Division 7 Section "Water Repellents" for clear penetrating and film-forming water repellents applied to concrete.

1.3 UNIT PRICES

A. Unit prices include the cost of preparing existing construction to receive the work indicated[**and costs of field quality-control testing required by the Work for which the unit price applies**].

B. Concrete Removal and Replacement or Patching: Work will be paid for by the cubic foot (cubic meter) computed on the basis of rectangular solid shapes approximating the actual shape of concrete removed and replaced with average depths, widths, and lengths, measured to the nearest inch (centimeter).

1. Reinforcing bar replacement will be paid for separately by the pound (kilogram) of replacement steel with welded and mechanical splices paid for by the unit.

C. Epoxy Crack Injection: Work will be paid for by the linear foot (linear meter) of crack injected.

D. Polymer Overlays: Work will be paid for by the square foot (square meter) of exposed overlay surface.

E. Composite Structural Reinforcement: Work will be paid for by the square foot (square meter) of composite material applied.

1.4 SUBMITTALS

A. Product Data: For each type of product indicated. Include material descriptions, chemical composition, physical properties, test data, and mixing, preparation, and application instructions.

B. [**Formwork**] [**and**] [**Shoring**] Drawings: Prepared by or under the supervision of a qualified professional engineer detailing [**formwork**] [**and**] [**temporary shoring and supports**]. Include schedule and sequence for erection and removal relative to removal of deteriorated concrete and reinforcement and subsequent repair and reinforcement.

C. Samples: Cured Samples of [**overlay**] [**and**] [**patching**] materials.

D. Qualification Data: For [**installers**] [**professional engineer**] [**manufacturers**] [**and**] [**testing agency**].

1. For products required to be installed by workers approved by product manufacturers, include letters of acceptance by product manufacturers certifying that installers are approved to apply their products.

E. Material Certificates: For each type of product indicated, signed by manufacturers.

F. Product Test Reports: Based on evaluation of comprehensive tests performed by a qualified testing agency, for [**bonding agents**] [**patching mortars**] [**epoxy adhesives**] [**and**] [**composite structural reinforcement**].

G. Rehabilitation Program: For each phase of rehabilitation process, including protection of surrounding materials and Project site during operations. Describe in detail materials, methods, equipment, and sequence of operations to be used for each phase of the Work.

1. If alternative materials and methods to those indicated are proposed for any phase of rehabilitation work, submit substitution request complying with Division 1 Section "Product Requirements" and provide a written description of proposed materials and methods, including evidence of successful use on other comparable projects, and a testing program to demonstrate their effectiveness for this Project.

1.5 QUALITY ASSURANCE

A. Installer Qualifications: Installer that employs workers trained and approved by manufacturer to apply [**corrosion-inhibiting treatments**] [**concrete patching and rebuilding materials**] [**epoxy crack injection materials**] [**polymer overlays**] [**polymer sealers**] [**and**] [**composite structural reinforcement**].

B. Manufacturer Qualifications: Manufacturer that employs factory-trained representatives who are available for consultation and Project-site inspection.

C. Source Limitations: Obtain [**concrete patching and rebuilding materials**] [**epoxy crack injection materials**] [**and**] [**composite structural reinforcement materials**][**, each,**] through one source from a single manufacturer.

D. Mockups: Build mockups for [**concrete removal and patching**] [**floor joint repair**] [**epoxy crack injection**] [**polymer overlays**] [**polymer sealers**] [**and**] [**composite structural reinforcement**] to demonstrate aesthetic effects and set quality standards for materials and execution.

1. Approved mockups may become part of the completed Work if undisturbed at time of Substantial Completion.

E. Preinstallation Conference: Conduct conference at Project site to comply with requirements in Division 1 Section "Project Management and Coordination."

1.6 DELIVERY, STORAGE, AND HANDLING

A. Deliver materials to Project site in manufacturer's original and unopened containers, labeled with type and name of products and manufacturers.

B. Comply with manufacturer's written instructions for minimum and maximum temperature requirements and other conditions for storage.

C. Store cementitious materials off the ground, under cover, and in a dry location.

D. Store aggregates, covered and in a dry location, where grading and other required characteristics can be maintained and contamination avoided.

1.7 PROJECT CONDITIONS

A. Environmental Limitations for Epoxies: Do not apply when air and substrate temperatures are outside limits permitted by manufacturer. During hot weather, cool epoxy components before mixing, store mixed products in shade, and cool unused mixed products to retard setting. Do not apply to wet substrates unless approved by manufacturer.

1. Use only Class A epoxies when substrate temperatures are below or are expected to go below 40 deg F (5 deg C) within 8 hours.
2. Use only Class A or B epoxies when substrate temperatures are below or are expected to go below 60 deg F (16 deg C) within 8 hours.
3. Use only Class C epoxies when substrate temperatures are above and are expected to stay above 60 deg F (16 deg C) for 8 hours.

B. Cold-Weather Requirements for Cementitious Materials: Do not apply unless air temperature is above 40 deg F (5 deg C) and will remain so for at least 48 hours after completion of Work.

C. Cold-Weather Requirements for Cementitious Materials: Comply with the following procedures:

1. When air temperature is below 40 deg F (5 deg C), heat patching material ingredients and existing concrete to produce temperatures between 40 and 90 deg F (5 and 32 deg C).

2. When mean daily air temperature is between 25 and 40 deg F (minus 4 and plus 5 deg C), cover completed Work with weather-resistant insulating blankets for 48 hours after repair or provide enclosure and heat to maintain temperatures above 32 deg F (0 deg C) within the enclosure for 48 hours after repair.
3. When mean daily air temperature is below 25 deg F (minus 4 deg C), provide enclosure and heat to maintain temperatures above 32 deg F (0 deg C) within the enclosure for 48 hours after repair.

D. Hot-Weather Requirements for Cementitious Materials: Protect repair work when temperature and humidity conditions produce excessive evaporation of water from patching materials. Provide artificial shade and wind breaks, and use cooled materials as required. Do not apply to substrates with temperatures of 90 deg F (32 deg C) and above.

E. Environmental Limitations for High-Molecular-Weight Methacrylate Sealers: Do not apply when concrete surface temperature is below 55 deg F (13 deg C) or above [**75 deg F (24 deg C)**] [**90 deg F (32 deg C)**]. Apply only to [**dry substrates**] [**substrates that have been dry for at least 72 hours**].

PART 2 - PRODUCTS

2.1 BONDING AGENTS

A. Epoxy-Modified, Cementitious Bonding and Anticorrosion Agent: Product that consists of water-insensitive epoxy adhesive, portland cement, and water-based solution of corrosion-inhibiting chemicals that forms a protective film on steel reinforcement.

1. Available Products: Subject to compliance with requirements, products that may be incorporated into the Work include, but are not limited to, the following:
2. Products: Subject to compliance with requirements, provide one of the following:

    a. Euclid Chemical Company (The); Corr-Bond.
    b. Kaufman Products, Inc; Surepoxy HM EPL.
    c. Sika Corporation; Armatec 110 EpoCem.
    d. Sonneborn, Div. of ChemRex; Sonoprep.
    e. Sto Corp., Concrete Restoration Division; Sto Bonding and Anti-Corrosion Agent.
    f. Tamms Industries, Inc.; Duralprep A.C.
    g. <**Insert manufacturer's name; product name or designation.**>

B. Epoxy Bonding Agent: ASTM C 881/C 881M, Type [**II**] [**V**].

1. Available Products: Subject to compliance with requirements, products that may be incorporated into the Work include, but are not limited to, the following:
2. Products: Subject to compliance with requirements, provide one of the following:

    a. Anti-Hydro International, Inc.; Poly-Epoxy Bonding #100.
    b. ChemCo Systems; CCS Bonder Liquid, [**LWL**] [**or**] [**SWL**].
    c. Dayton Superior Corporation; [**Resi-Bond (J-58)**] [**Sure-Anchor Epoxy (J-50),**] [**or**] [**Sure-Inject (J-56)**].

d. Euclid Chemical Company (The); [**Euco #352 Epoxy System**] [**Euco #452 Epoxy System**] [**or**] [**Euco #620 Epoxy System**].
e. Kaufman Products, Inc.; SurePoxy HM EPL.
f. MBT Protection and Repair, Div. of ChemRex; Concresive Liquid LPL.
g. Meadows, W. R., Inc.; [**Sealtight Rezi-Weld 1000**] [**Sealtight Rezi-Weld Gel Paste**] [**Sealtight Rezi-Weld Gel Paste State**] [**or**] [**Sealtight Rezi-Weld LV**].
h. Sika Corporation; [**Sikadur 31, Hi-Mod Gel**] [**Sikadur 32, Hi-Mod**] [**Sikadur 32, Hi-Mod LPL**] [**Sikadur 35, Hi-Mod LV**] [**or**] [**Sikadur 35, Hi-Mod LV LPL**].
i. Sonneborn, Div. of ChemRex; [**Epogel**] [**or**] [**Epogrip**].
j. Tamms Industries, Inc.; Duralbond.
k. ThoRoc, Div. of ChemRex; Epoxy Adhesive 24LPL.
l. Unitex; [**Pro-Poxy 204**] [**or**] [**Slow Set Bonding Agent**].
m. US MIX Products Company; [**US Spec Maxi - Bond 2500**] [**or**] [**US Spec Slow Bond 6500**].
n. <**Insert manufacturer's name; product name or designation.**>

3. Thin Film Open Time: Not less than [**two**] [**six**] [**24**] hours.

C. Latex Bonding Agent: ASTM C 1059, Type [**I**] [**II**] [**II at exterior locations and where indicated, Type I at other locations**].

1. Available Products: Subject to compliance with requirements, products that may be incorporated into the Work include, but are not limited to, the following:
2. Products: Subject to compliance with requirements, provide one of the following:

a. Latex Bonding Agent, Type I:

1) Euclid Chemical Company (The); Euco Weld.
2) Kaufman Products, Inc.; Sureweld.
3) Meadows, W. R. Inc.; Intralok.
4) Sika Corporation; Sikalatex.
5) US MIX Products Company; US Spec Bondcoat.
6) <**Insert manufacturer's name; product name or designation.**>

b. Latex Bonding Agent, Type II:

1) Dayton Superior Corporation; Day-Chem Ad Bond (J-40).
2) Euclid Chemical Company (The); Flex-Con.
3) Kaufman Products, Inc.; Surebond.
4) Meadows, W. R. Inc.; Sealtight Acry-Lok.
5) Sonneborn, Div. of ChemRex; Acrylic Additive.
6) US MIX Products Company; US Spec Acrylcoat.
7) <**Insert manufacturer's name; product name or designation.**>

D. Mortar Scrub-Coat: 1 part portland cement complying with ASTM C 150, Type I, II, or III and 1 part fine aggregate complying with ASTM C 144, except 100 percent passing a No. 16 (1.18-mm) sieve.

2.2 PATCHING MORTAR

A. Patching Mortar, General:

1. Unless otherwise indicated, use any of the products specified in this Article.
2. Overhead Patching Mortar: For overhead repairs, use patching mortar recommended by manufacturer for overhead use and as specified in this Article.
3. Coarse Aggregate for Adding to Patching Mortar: Washed aggregate complying with ASTM C 33, Size No. 8, Class 5S. Add only as permitted by patching mortar manufacturer.

B. Job-Mixed Patching Mortar: 1 part portland cement complying with ASTM C 150, Type I, II, or III and 2-1/2 parts fine aggregate complying with ASTM C 144, except 100 percent passing a No. 16 (1.18-mm) sieve.

C. Cementitious Patching Mortar: Packaged, dry mix complying with ASTM C 928.

1. Available Products: Subject to compliance with requirements, products that may be incorporated into the Work include, but are not limited to, the following:
2. Products: Subject to compliance with requirements, provide one of the following:

a. Cementitious Patching Mortar:

1) Kaufman Products, Inc.; Hicap.
2) MBT Protection and Repair, Div. of ChemRex; [**Emaco S66 CI**] [**Emaco S77 CI**] [**or**] [**Emaco S88 CI**].
3) Sika Corporation; [**Sikarepair 223**] [**or**] [**Sikarepair SHB**].
4) Sonneborn, Div. of ChemRex; Deep Pour Mortar.
5) Sto Corp., Concrete Restoration Division; Sto Full-Depth Repair Mortar.
6) ThoRoc, Div. of ChemRex; LA Repair Mortar.
7) <**Insert manufacturer's name; product name or designation.**>

b. Cementitious Patching Mortar, Rapid Setting:

1) CGM, Incorporated; Pro Patching Cement.
2) Dayton Superior Corporation; [**Day-Chem Perma-Patch**] [**Re-Crete 5 Minute**] [**or**] [**Re-Crete 20 Minute**].
3) Euclid Chemical Company (The); Euco-Speed.
4) Fox Industries, Inc.; FX-928 Rapid Hardening Mortar.
5) Kaufman Products, Inc.; Duracrete.
6) Meadows, W. R. Inc.; [**Sealtight Meadow-Patch 5**] [**Sealtight Meadow-Patch 20**] [**or**] [**Sealtight Futura-15**].
7) Sika Corporation; Sikaset Roadway Patch.
8) Sonneborn, Div. of ChemRex; Road Patch.
9) Sto Corp., Concrete Restoration Division; Sto Rapid Repair Mortar.
10) Tamms Industries, Inc.; Speed Crete 2028.
11) ThoRoc, Div. of ChemRex; [**10-60 Rapid Mortar**] [**or**] [**10-61 Rapid Mortar**].
12) Unitex; Patch Set 928.
13) US MIX Products Company; US Spec Transpatch.
14) Watson Bowman Acme Corp., Degussa AG; Wabo Renew 100.

15) <**Insert manufacturer's name; product name or designation.**>

D. Polymer-Modified, Cementitious Patching Mortar: Packaged, dry mix complying with ASTM C 928, that contains a[**non-redispersible**] latex additive as either a dry powder or a separate liquid that is added during mixing.

1. Available Products: Subject to compliance with requirements, products that may be incorporated into the Work include, but are not limited to, the following:
2. Products: Subject to compliance with requirements, provide one of the following:

a. AQUAFIN, Inc.; MORTAR-40.
b. CGM, Incorporated; [**Pro Trowel Mortar.**] [**Pro Gel Mortar.**] [**Pro Flowable Mortar.**] [**Pro N.B.P.**]
c. Dayton Superior Corporation; [**HD-50**] [**or**] [**Thin Resurfacer**].
d. Euclid Chemical Company (The); [**Concrete Coat**] [**Thin Coat**] [**or**] [**Verticoat**].
e. Fox Industries, Inc.; [**FX-243**] [**or**] [**FX-273**] Trowel Grade Polymer Repair Mortar.
f. Kaufman Products, Inc.; [**Patchwell**] [**Patchwell Kit**] [**Patchwell Kit D**] [**or**] [**Patchwell Kit HB**].
g. MBT Protection and Repair, Div. of ChemRex; [**Emaco R320 CI**] [**or**] [**Emaco R350 CI**].
h. Meadows, W. R., Inc.; [**Sealtight Meadow-Patch T1**] [**or**] [**Sealtight Meadow-Crete FNP**].
i. Sika Corporation; [**SikaTop 121 Plus**] [**SikaTop 122 Plus**] [**SikaTop 123 Plus**] [**or**] [**SikaTop 126 Plus**].
j. Sonneborn, Div. of ChemRex; [**Screed**] [**Sonopatch 100**] [**Sonopatch 200**] [**Sonopatch 300**].
k. Sto Corp., Concrete Restoration Division; [**Sto Flowable Mortar**] [**Sto Overhead Mortar**] [**Sto Thin-Coat Mortar**] [**or**] [**Sto Trowel-Grade Mortar**].
l. Tamms Industries, Inc.; [**Duraltop Fast Set**] [**or**] [**Speed Crete PM**].
m. ThorRoc, Div. of ChemRex, Inc.; [**HB2 Repair Mortar**] [**or**] [**Polyset**].
n. US MIX Products Company; [**US Spec Polypatch FR**] [**or**] [**US Spec Thinpatch**].
o. <**Insert manufacturer's name; product name or designation.**>

E. Polymer-Modified, Silica-Fume-Enhanced, Cementitious Patching Mortar: Packaged, dry mix complying with ASTM C 928, that contains silica fume complying with ASTM C 1240 and a [**non-redispersible**]latex additive as either a dry powder or a separate liquid that is added during mixing.

1. Available Products: Subject to compliance with requirements, products that may be incorporated into the Work include, but are not limited to, the following:
2. Products: Subject to compliance with requirements, provide one of the following:

a. Euclid Chemical Company (The); Verticoat Supreme.
b. Fox Industries, Inc.; [**FX-261 Polymer Repair Mortar**] [**or**] [**FX-286**].
c. MBT Protection and Repair, Div. of ChemRex; Emaco S88 CI.
d. Meadows, W. R., Inc.; [**Sealtight Meadow-Crete H2**] [**or**] [**Sealtight Meadow-Crete-GPS**].
e. Sika Corporation; Sika Monotop 615.

f. Sonneborn, Div. of ChemRex; [**Gel Patch**] [**Sonopatch 200**] [**or**] [**Sonopatch 300**].
g. US Mix Products Company; US Spec V/O Patch.
h. <**Insert manufacturer's name; product name or designation.**>

2.3 CONCRETE

A. Concrete Materials and Admixtures: Comply with Division 3 Section "[**Cast-in-Place Concrete**] [**Cast-in-Place Concrete (Limited Applications)**]."

B. Steel and Fiber Reinforcement and Reinforcement Accessories: Comply with Division 3 Section "[**Cast-in-Place Concrete**] [**Cast-in-Place Concrete (Limited Applications)**]."

C. Form-Facing Materials: Comply with Division 3 Section "[**Cast-in-Place Concrete**] [**Cast-in-Place Concrete (Limited Applications)**]."

D. Shotcrete: Comply with Division 3 Section "Shotcrete."

E. Preplaced Aggregate: Washed aggregate complying with ASTM C 33, Class 5S, with [**95 to 100 percent passing a 1-1/2-inch (37.5-mm) sieve, 40 to 80 percent passing a 1-inch (25-mm) sieve, 20 to 45 percent passing a 3/4-inch (19-mm) sieve, 0 to 10 percent passing a 1/2-inch (12.5-mm) sieve, and 0 to 2 percent passing a 3/8-inch ((9.5-mm)) sieve**] [**100 percent passing a 1-1/2-inch (37.5-mm) sieve, 95 to 100 percent passing a 1-inch (25-mm) sieve, 40 to 80 percent passing a 3/4-inch (19-mm) sieve, 0 to 15 percent passing a 1/2-inch (12.5-mm) sieve, and 0 to 2 percent passing a 3/8-inch (9.5-mm) sieve**].

F. Fine Aggregate for Grout Used with Preplaced Aggregate: Fine aggregate complying with ASTM C 33, but with 100 percent passing a No. 8 (2.36-mm) sieve, 95 to 100 percent passing a No. 16 (1.18-mm) sieve, 55 to 80 percent passing a No. 30 (0.6-mm) sieve, 30 to 55 percent passing a No. 50 (0.3-mm) sieve, 10 to 30 percent passing a No. 100 (0.15-mm) sieve, 0 to 10 percent passing a No. 200 (0.075-mm) sieve, and having a fineness modulus of 1.30 to 2.10.

G. Grout Fluidifier for Grout Used with Preplaced Aggregate: ASTM C 937.

H. Portland Cement for Grout Used with Preplaced Aggregate: ASTM C 150.

I. Pozzolans for Grout Used with Preplaced Aggregate: ASTM C 618.

2.4 MISCELLANEOUS MATERIALS

A. Epoxy Joint Filler: 2-component, semirigid, 100 percent solids, epoxy resin with a Type A Shore durometer hardness of at least 80 per ASTM D 2240.

1. Available Products: Subject to compliance with requirements, products that may be incorporated into the Work include, but are not limited to, the following:
2. Products: Subject to compliance with requirements, provide one of the following:

a. Anti-Hydro International, Inc.; Groove & Crack Filler #250.
b. ChemCo Systems; CCS Grout, [**Control Joint**] [**or**] [**Control Joint - HB**].
c. Euclid Chemical Company (The); Euco [**700**] [**or**] [**800**].

d. Kaufman Products, Inc.; Surepoxy Flexijoint.
e. MBT Protection and Repair, Div. of ChemRex; Masterfill 300i.
f. Meadows, W. R., Inc.; Sealtight Rezi-Weld Flex.
g. Metzger/McGuire; [**MM-80**] [**or**] [**Edge-Pro XL**].
h. Sika Corporation; [**Sikadur 51 NS**] [**or**] [**Sikadur 51 SL**].
i. Unitex; [**Pro-Flex**] [**or**] [**Pro-Flex Gel**].
j. US Mix Products Company; US Spec SR 50 - EJF.
k. <**Insert manufacturer's name; product name or designation.**>

B. Polyurea Joint Filler: 2-component, semirigid, 100 percent solids, polyurea resin with a Type A Shore durometer hardness of at least 80 per ASTM D 2240.

1. Available Products: Subject to compliance with requirements, products that may be incorporated into the Work include, but are not limited to, the following:
2. Products: Subject to compliance with requirements, provide one of the following:

a. ASTC Polymers; Penetron 3003.
b. ChemCo Systems; CCS Grout, Polyurea [**Control Joint**] [**or**] [**SWL**].
c. Dayton Superior Corporation; Joint Saver II.
d. Euclid Chemical Company (The); Euco Qwikjoint 200.
e. MBT Protection and Repair, Div. of ChemRex; Masterfill 400 CT.
f. Metzger/McGuire; [**Spal-Pro RS 88**] [**or**] [**Spal-Pro 2000**].
g. Sonneborn, Div. of ChemRex; Sonolastic TF-100.
h. <**Insert manufacturer's name; product name or designation.**>

C. Epoxy Crack Injection Adhesive: ASTM C 881/C 881M, Type [**I,**] [**IV,**] [**Grade 1,**] [**except for gel time,**] [**solvent free**].

1. Available Products: Subject to compliance with requirements, products that may be incorporated into the Work include, but are not limited to, the following:
2. Products: Subject to compliance with requirements, provide one of the following:

a. ChemCo Systems; CCS Grout, [**Standard**] [**Standard - High Ambient Temperature**] [**or**] [**Low Viscosity**].
b. Dayton Superior Corporation; [**Resi-Bond (J-58)**] [**Sure-Anchor Epoxy (J-50)**] [**or**] [**Sure-Inject (J-56)**].
c. Euclid Chemical Company (The); [**Euco #352 Epoxy System**] [**Euco #452 Epoxy System**] [**Euco #620 Epoxy System**] [**Euco #452 LV**] [**Euco #620 LV**] [**or**] [**Eucopoxy Injection Resin**].
d. Kaufman Products, Inc.; [**Surepoxy HMLV**] [**Surepoxy HMLV-Class B**] [**or**] [**Surepoxy HM-SLV**].
e. MBT Protection and Repair, Div. of ChemRex; [**Concresive Standard LVI**] [**or**] [**SCB Concresive 1380**].
f. Meadows, W. R., Inc.; Sealtight Rezi-Weld LV.
g. Sika Corporation; [**Sikadur 35, Hi-Mod LV**] [**Sikadur 35, Hi-Mod LV LPL**] [**Sikadur 52**] [**or**] [**Sikadur Injection Gel**].
h. Sonneborn, Div. of ChemRex; [**Epofil**] [**or**] [**Epofil SLV**].
i. Tamms Industries, Inc.; Duralcrete LV.
j. Thermal-Chem; Crack Injection, Product [**2**] [**205**] [**or**] [**212**].
k. ThorRoc, Div. of ChemRex, Inc.; [**LV300 Injection Resin**] [**or**] [**ULV140 Injection Resin**].

l. Unitex; [**Pro-Poxy 50 SuperLV**] [**Pro-Poxy 100 LV**] [**or**] [**Slow Set Injection Resin**].
m. US MIX Products Company; US Spec Maxi - Bond 500LV.
n. <**Insert manufacturer's name; product name or designation.**>

D. Capping Adhesive: Product manufactured for use with crack injection adhesive by same manufacturer.

E. Corrosion-Inhibiting Treatment Materials: Water-based solution of alkaline corrosion-inhibiting chemicals that penetrates concrete by diffusion and forms a protective film on steel reinforcement.

1. Available Products: Subject to compliance with requirements, products that may be incorporated into the Work include, but are not limited to, the following:
2. Products: Subject to compliance with requirements, provide one of the following:

a. Cortec Corporation; [**MCI 2005**] [**or**] [**MCI 2020**].
b. Degussa Corporation; Protectosil CIT.
c. Fox industries, Inc.; FX-361 Migratory Corrosion Inhibitor.
d. Sika Corporation; Sika Ferrogard 903.
e. Sonneborn, Div. of ChemRex; Corrosion Inhibitor.
f. <**Insert manufacturer's name; product name or designation.**>

F. Polymer Overlay: Epoxy adhesive complying with ASTM C 881/C 881M, Type III.

1. Available Products: Subject to compliance with requirements, products that may be incorporated into the Work include, but are not limited to, the following:
2. Products: Subject to compliance with requirements, provide one of the following:

a. Kaufman Products, Inc.; [**Surepoxy VLM**] [**or**] [**Surepoxy VLM-Class B**].
b. Meadows, W. R., Inc.; Sealtight Rezi-Weld Type III DOT.
c. Thermal-Chem; Flexgard T, Product 309.
d. Unitex; Pro-Poxy Type III D.O.T.
e. US MIX Products Company; US SPEC Type III Epoxy Binder.
f. <**Insert manufacturer's name; product name or designation.**>

G. Aggregate for Use with Polymer Overlay: Oven-dried, washed silica sand complying with ACI 503.3.

H. Polymer Sealer: Low-viscosity [**epoxy**] [**or**] [**high-molecular-weight methacrylate**] penetrating sealer recommended by manufacturer for application to exterior concrete traffic surfaces.

1. Available Products: Subject to compliance with requirements, products that may be incorporated into the Work include, but are not limited to, the following:
2. Products: Subject to compliance with requirements, provide one of the following:

a. Epoxy Sealers:

1) ChemCo Systems; CCS Coating, Epoxy Healer Sealer.
2) Euclid Chemical Company (The); Euco #512 Epoxy Sealer.

3) Fox Industries, Inc.; FX-452 Epoxy Penetrating Sealer.
4) Kaufman Products, Inc.; SurePoxy Penetrating Sealer.
5) MBT Protection and Repair, Div. of ChemRex; Masterseal GP.
6) Thermal-Chem; Hairline Crack Sealer, Product 207.
7) Unitex; Pro-Seal HS.
8) US MIX Products Company; US Spec Eposeal LVS.
9) <**Insert manufacturer's name; product name or designation.**>

b. High-Molecular-Weight Methacrylate Sealers:

1) Meadows, W. R. Inc.; Sealtight Vocomp-25.
2) Sika Corporation; Sikapronto 19.
3) Transpo Industries, Inc.; Sealate T70.
4) <**Insert manufacturer's name; product name or designation.**>

I. Methylmethacrylate Sealer/Brighteners: Clear low-viscosity sealer recommended by manufacturer for sealing exterior exposed-aggregate concrete, and formulated to bring out color of aggregates and give concrete a wet look.

1. Available Products: Subject to compliance with requirements, products that may be incorporated into the Work include, but are not limited to, the following:
2. Products: Subject to compliance with requirements, provide one of the following:

a. Dayton Superior Corporation; [**Day-Chem Aggre-Gloss (J-25)**] [**or**] [**Safe Seal Heavy Duty (J-24 HD)**].
b. Kaufman Products, Inc.; [**Sureal**] [**or**] [**Sureal Emulsion**].
c. Meadows, W. R., Inc.; Sealtight CS-309-25.
d. Tamms Industries, Inc.; Luster Seal 300.
e. Unitex; Bright Rock Sealer.
f. US MIX Products Company; [**US Spec BRS-25**] [**or**] [**US Spec Radiance UV-25**].
g. <**Insert manufacturer's name; product name or designation.**>

J. Steel Plates, Shapes, and Bars: ASTM A 36/A 36M.

1. After fabricating, prepare surfaces to comply with SSPC-SP 6/NACE No. 3, "Commercial Blast Cleaning."
2. After preparation, apply one coat of lead- and chromate-free, modified-alkyd primer complying with MPI#76 and one coat of alkyd-gloss enamel complying with MPI#96.
3. After preparation, apply two-coat high-performance coating system consisting of organic zinc-rich primer, complying with SSPC-Paint 20 or SSPC-Paint 29 and topcoat of high-build, urethane or epoxy coating recommended by manufacturer for application over specified zinc-rich primer. Comply with coating manufacturer's written directions and with requirements in SSPC-PA 1, "Paint Application Specification No. 1: Shop, Field, and Maintenance Painting of Steel," for shop painting.

a. Available Products: Subject to compliance with requirements, products that may be incorporated into the Work include, but are not limited to, the following:
b. Products: Subject to compliance with requirements, provide one of the following:

1) Benjamin Moore & Co.; Epoxy Zinc-Rich Primer CM18/19 and M74/M75 Aliphatic Acrylic Urethane Semi-Gloss.
2) Carboline Company; Carbozinc 621 and Carboguard 890 2-Component Epoxy.
3) ICI Devoe Coatings; Catha-Coat 313 and Devthane 378 Aliphatic Urethane Semi-Gloss Enamel
4) International Coatings Limited; Interzinc 315 Epoxy Zinc-Rich Primer and Interthane 870.
5) PPG Architectural Finishes, Inc; Aquapon Zinc-Rich Primer ABC 97-670 and Aquapon 97-130 Epoxy.
6) Sherwin-Williams Company (The); Corothane I GalvaPac Zinc Primer and Macropoxy HS High Solids Epoxy.
7) Tnemec Company, Inc.; Tneme-Zinc 90-97 and Series 27 Hi-Build Epoxy.
8) <**Insert manufacturer's name; product name or designation.**>

K. Bolts, Nuts, and Washers: Carbon steel; ASTM A 307, Grade A (ASTM F 568M, Property Class 4.6), for bolts; ASTM A 563 (ASTM A 563M), Grade A, for nuts; and ASTM F 436 (ASTM F 436M) for washers; hot-dip or mechanically zinc coated.

L. Postinstalled Anchors: [**Chemical**] [**or**] [**expansion**] anchors, made from stainless-steel components complying with ASTM F 593 and ASTM F 594, Alloy Group 1 or 2 (ASTM F 738M and ASTM F 836M, Alloy Group A1 or A4) for bolts and nuts; ASTM A 666 or ASTM A 276, Type 304 or 316, for anchors, with capability to sustain, without failure, a load equal to four times the load imposed, as determined by testing per ASTM E 488, conducted by a qualified independent testing agency.

M. Composite Structural Reinforcement: Manufacturer's system consisting of [**carbon**] [**glass**]-fiber reinforcement in the form of [**preimpregnated sheets**] [**or**] [**tow sheet with field-applied saturant**], and epoxy primers, fillers, adhesives, saturants, and topcoats, designed for use as external structural reinforcement for concrete.

1. Available Products: Subject to compliance with requirements, products that may be incorporated into the Work include, but are not limited to, the following:
2. Products: Subject to compliance with requirements, provide one of the following:

a. Sika Corporation; Carbodur and Sikadur 30.
b. Sumitomo Corporation of America; Replark.
c. Thermal-Chem; Epic Systems.
d. VSL (VStructural, LLC), a Structural Group Company; V-Wrap [**C100**] [**or**] [**C200**].
e. VSL (VStructural, LLC), a Structural Group Company; V-Wrap EG50.
f. Watson Bowman Acme Corp., Degussa AG; Wabo MBrace.
g. <**Insert manufacturer's name; product name or designation.**>

2.5 MIXES

A. Mix products, in clean containers, according to manufacturer's written instructions.

1. Add clean silica sand and coarse aggregates to products only as recommended by manufacturer.

2. Do not add water, thinners, or additives unless recommended by manufacturer.
3. When practical, use manufacturer's premeasured packages to ensure that materials are mixed in proper proportions. When premeasured packages are not used, measure ingredients using graduated measuring containers; do not estimate quantities or use shovel or trowel as unit of measure.
4. Do not mix more materials than can be used within recommended open time. Discard materials that have begun to set.

B. Mortar Scrub-Coat: Mix with enough water to provide consistency of thick cream.

C. Dry-Pack Mortar: Mix with just enough liquid to form damp cohesive mixture that can be squeezed by hand into a ball but is not plastic.

D. Concrete: Comply with Division 3 Section "[**Cast-in-Place Concrete**] [**Cast-in-Place Concrete (Limited Applications)**]."

E. Shotcrete: Comply with Division 3 Section "Shotcrete."

F. Grout for Use with Preplaced Aggregate: Proportion according to ASTM C 938. Add grout fluidifier to mixing water followed by cementitious materials and then fine aggregate.

PART 3 - EXECUTION

3.1 EXAMINATION

A. Notify Architect seven days in advance of dates when areas of deteriorated or delaminated concrete and deteriorated reinforcing bars will be located.

B. Locate areas of deteriorated or delaminated concrete using hammer or chain drag sounding and mark boundaries. Mark areas for removal by simplifying and squaring off boundaries[**as directed by Architect**]. At columns and walls make boundaries level and plumb, unless otherwise indicated.

C. Locate at least three reinforcing bars using a pachometer, and drill test holes to determine depth of cover. Calibrate pachometer, using depth of cover measurements, and verify depth of cover in removal areas using pachometer.

3.2 PREPARATION

A. Protect people, motor vehicles, equipment, surrounding construction, Project site, plants, and surrounding buildings from injury resulting from concrete rehabilitation work.

1. Erect and maintain temporary protective covers over pedestrian walkways and at points of entrance and exit for people and vehicles, unless such areas are made inaccessible during the course of concrete rehabilitation work. Construct covers of tightly fitted, 3/4-inch (19-mm) exterior-grade plywood supported at 16 inches (405 mm) o.c. and covered with asphalt roll roofing.

2. Protect adjacent equipment and surfaces by covering them with heavy polyethylene film and waterproof masking tape[**or a liquid strippable masking agent**]. If practical, remove items, store, and reinstall after potentially damaging operations are complete.
3. Neutralize and collect alkaline and acid wastes according to requirements of authorities having jurisdiction, and dispose of by legal means off Owner's property.
4. Dispose of runoff from wet operations by legal means and in a manner that prevents soil erosion, undermining of paving and foundations, damage to landscaping, and water penetration into building interiors.
5. Collect runoff from wet operations and dispose of by legal means off Owner's property.

B. Shoring: Install temporary supports before beginning concrete removal.

C. Concrete Removal:

1. Saw-cut perimeter of areas indicated for removal to a depth of at least [**1/2 inch (13 mm)**] <**Insert depth**>. Make cuts perpendicular to concrete surfaces and no deeper than cover on reinforcement.
2. Remove deteriorated and delaminated concrete by breaking up and dislodging from reinforcement.
3. Remove additional concrete, if necessary, to provide a depth of removal of at least [**1/2 inch (13 mm)**] <**Insert depth**> over entire removal area.
4. Where half or more of the perimeter of reinforcing bar is exposed, bond between reinforcing bar and surrounding concrete is broken, or reinforcing bar is corroded, remove concrete from entire perimeter of bar and to provide at least a 3/4-inch (19-mm) clearance around bar.
5. Test areas where concrete has been removed by tapping with hammer, and remove additional concrete until unsound and disbonded concrete is completely removed.
6. Provide fractured aggregate surfaces with a profile of at least 1/8 inch (3 mm) that are approximately perpendicular or parallel to original concrete surfaces. At columns and walls, make top and bottom surfaces level, unless otherwise directed.
7. Thoroughly clean removal areas of loose concrete, dust, and debris.

D. Reinforcing Bar Preparation: Remove loose and flaking rust from reinforcing bars by [**high-pressure water cleaning**] [**abrasive blast cleaning**] [**needle scaling**] [**or**] [**wire brushing**] until only tightly bonded light rust remains.

1. Where section loss of reinforcing bar is more than 25 percent, or 20 percent in 2 or more adjacent bars, cut bars and remove and replace[**as directed by Architect**]. Remove additional concrete as necessary to provide at least 3/4-inch (19-mm) clearance at existing and replacement bars. Splice replacement bars to existing bars according to ACI 318 (ACI 318M), by lapping, welding, or using mechanical couplings.

E. Preparation of Floor Joints for Repair: Saw-cut joints full width to edges and depth of spalls, but not less than [**3/4 inch (19 mm)**] [**1 inch (25 mm)**] [**2 inches (50 mm)**] <**Insert depth**> deep. Clean out debris and loose concrete; vacuum or blow clear with compressed air.

F. Surface Preparation for Corrosion-Inhibiting Treatment: Clean concrete by [**low-pressure water cleaning**] [**detergent scrubbing**] [**or**] [**sand blasting**] to remove dirt, oils, films, and other materials detrimental to treatment application. Allow surface to dry before applying corrosion-inhibiting treatment.

G. Surface Preparation for Overlays: [**Remove delaminated material and deteriorated concrete surface material.**]Roughen surface of concrete by [**sand blasting**] [**shot blasting**] [**scarifying**] [**needle scaling**] [**high-pressure water jetting**] [**scabbling**] [**flame blasting**] [**or**] [**milling**] to produce a surface profile matching CSP [**3**] [**4**] [**5**] [**6**] [**7**] [**8**] [**9**] per ICRI 03732. Sweep and vacuum roughened surface to remove debris followed by low-pressure water cleaning.

H. Surface Preparation for Sealers: Clean concrete by [**shot blasting**] [**low-pressure water cleaning**] [**or**] [**detergent scrubbing**] to remove dirt, oils, films, and other materials detrimental to sealer application.

I. Surface Preparation for Sealers: Acid etch surface of concrete to produce a surface profile matching CSP 1 per ICRI 03732.[**Prepare surface for acid etching by detergent scrubbing to remove oils and films that may prevent acid penetration.**]

1. Remove excess acid solution, reaction products, and debris by squeegeeing or vacuuming.
2. Scrub surface with an alkaline detergent, rinse, and squeegee or vacuum.
3. Check acidity of surface with pH test paper and continue rinsing until pH is acceptable.
4. When pH is acceptable and surface is clean, vacuum dry.

J. Surface Preparation for Composite Structural Reinforcement: [**Remove delaminated material and deteriorated concrete surface material.**]Clean concrete where reinforcement and epoxy patching mortar is to be applied by [**low-pressure water cleaning**] [**or**] [**detergent scrubbing**] to remove dirt, oils, films, and other materials detrimental to epoxy application. Roughen surface of concrete by sand blasting.

3.3 APPLICATION

A. General: Comply with manufacturer's written instructions and recommendations for application of products, including surface preparation.

B. Epoxy-Modified, Cementitious Bonding and Anticorrosion Agent: Apply to reinforcing bars [**and concrete**]by stiff brush or hopper spray according to manufacturer's written instructions. Apply to reinforcing bars in two coats, allowing first coat to dry two to three hours before applying second coat. Allow to dry before placing patching mortar or concrete.

C. Epoxy Bonding Agent: Apply to reinforcing bars[**and concrete**] by brush, roller, or spray according to manufacturer's written instructions, leaving no pinholes or other uncoated areas. [**Apply to reinforcing bars in at least two coats, allowing first coat to dry before applying second coat.**]Apply patching mortar or concrete while epoxy is still tacky. If epoxy dries, recoat before placing patching mortar or concrete.

D. Latex Bonding Agent, Type II: Mix with portland cement and scrub into concrete surface according to manufacturer's written instructions. Apply patching mortar or concrete while bonding agent is still wet. If bonding agent dries, recoat before placing patching mortar or concrete.

E. Latex Bonding Agent, Type I: Apply to concrete by brush roller or spray. Allow to dry before placing patching mortar or concrete.

F. Mortar Scrub-Coat: Dampen repair area and surrounding concrete 6 inches (150 mm) beyond repair area. Remove standing water and apply scrub-coat with a brush, scrubbing it into surface and thoroughly coating repair area. If scrub-coat dries, recoat before applying patching mortar or concrete.

G. Patching Mortar: Unless otherwise recommended by manufacturer, apply as follows:

1. Wet substrate thoroughly and then remove standing water. Scrub a slurry of neat patching mortar[**mixed with latex bonding agent**] into substrate, filling pores and voids.
2. Place patching mortar by troweling toward edges of patch to force intimate contact with edge surfaces. For large patches, fill edges first and then work toward center, always troweling toward edges of patch. At fully exposed reinforcing bars, force patching mortar to fill space behind bars by compacting with trowel from sides of bars.
3. For vertical patching, place material in lifts of not more than [**1 inch (25 mm)**] [**1-1/2 inches (38 mm)**] [**2 inches (50 mm)**] [**3 inches (75 mm)**] nor less than [**1/8 inch (3 mm)**] [**1/4 inch (6 mm)**]. Do not feather edge.
4. For overhead patching, place material in lifts of not more than [**1 inch (25 mm)**] [**1-1/2 inches (38 mm)**] [**2 inches (50 mm)**] nor less than [**1/8 inch (3 mm)**] [**1/4 inch (6 mm)**]. Do not feather edge.
5. After each lift is placed, consolidate material and screed surface.
6. Where multiple lifts are used, score surface of lifts to provide a rough surface for application of subsequent lifts. Allow each lift to reach final set before placing subsequent lifts.
7. Allow surfaces of lifts that are to remain exposed to become firm and then finish to a [**smooth**] [**rough**] surface with a [**wood or sponge float**] [**broom or burlap drag**].
8. Wet-cure cementitious patching materials, including polymer-modified, cementitious patching materials, for not less than seven days by water-fog spray or water-saturated absorptive cover.

H. Dry-Pack Mortar: Use for deep cavities[**and where indicated**]. Unless otherwise recommended by manufacturer, apply as follows:

1. Provide forms where necessary to confine patch to required shape.
2. Wet substrate and forms thoroughly and then remove standing water.
3. Place dry-pack mortar into cavity by hand, and compact into place with a hardwood drive stick and mallet or hammer. Do not place more material at a time than can be properly compacted. Continue placing and compacting until patch is approximately level with surrounding surface.
4. After cavity is filled and patch is compacted, trowel surface to match profile and finish of surrounding concrete. A thin coat of patching mortar may be troweled into the surface of patch to help obtain required finish.
5. Wet-cure patch for not less than seven days by water-fog spray or water-saturated absorptive cover.

I. Concrete: Place according to Division 3 Section "[**Cast-in-Place Concrete**] [**Cast-in-Place Concrete (Limited Applications)**]" and as follows:

1. Apply [**epoxy-modified, cementitious bonding and anticorrosion agent**] [**epoxy bonding agent**] to reinforcement[**and concrete substrate**].
2. Apply [**latex bonding agent**] [**Type I, latex bonding agent**] [**mortar scrub-coat**] to concrete substrate.

3. Use vibrators to consolidate concrete as it is placed.
4. At unformed surfaces, screed concrete to produce a surface that when finished with patching mortar will match required profile and surrounding concrete.
5. [**Where indicated**]place concrete by form and pump method.

    a. Design and construct forms to resist pumping pressure in addition to weight of wet concrete. Seal joints and seams in forms and junctions of forms with existing concrete.
    b. Pump concrete into place, releasing air from forms as concrete is introduced. When formed space is full, close air vents and pressurize to 14 psi (96 kPa).

6. Wet-cure concrete for not less than seven days by leaving forms in place or keeping surfaces continuously wet by water-fog spray or water-saturated absorptive cover.
7. Fill placement cavities with dry-pack mortar and repair voids with patching mortar. Finish to match surrounding concrete.

J. Shotcrete: Place according to Division 3 Section "Shotcrete" and as follows:

1. Apply [**epoxy-modified, cementitious bonding and anticorrosion agent**] [**epoxy bonding agent**] to reinforcement[**and concrete substrate**].
2. Apply [**latex bonding agent**] [**Type I, latex bonding agent**] [**mortar scrub-coat**] to concrete substrate.
3. Screed and finish shotcrete to produce a surface matching required profile and surrounding concrete.

K. Grouted Preplaced Aggregate Concrete: Use [**for column and wall repairs**] [**where indicated**]. Place as follows:

1. Design and construct forms to resist pumping pressure in addition to weight of wet grout. Seal joints and seams in forms and junctions of forms with existing concrete.
2. Apply [**epoxy-modified, cementitious bonding and anticorrosion agent**] [**epoxy bonding agent**] to reinforcement[**and concrete substrate**].
3. Place aggregate in forms, consolidating aggregate as it is placed. Pack aggregate into upper areas of forms to achieve intimate contact with concrete surfaces.
4. Fill forms with water to thoroughly dampen aggregate and substrates. Drain water from forms before placing grout.
5. Pump grout into place at bottom of preplaced aggregate, forcing grout upward. Release air from forms at top as grout is introduced. When formed space is full and grout flows from air vents, close vents and pressurize to 14 psi (96 kPa).
6. Wet-cure concrete for not less than seven days by leaving forms in place or keeping surfaces continuously wet by water-fog spray or water-saturated absorptive cover.
7. Repair voids with patching mortar and finish to match surrounding concrete.

L. Joint Filler: Install in nonmoving floor joints where indicated.

1. Install filler to a depth of at least [**3/4 inch (19 mm)**] [**1 inch (25 mm)**] [**2 inches (50 mm)**] <**Insert depth**>. Use fine silica sand no more than 1/4 inch (6 mm) deep to close base of joint. Do not use sealant backer rods or compressible fillers below joint filler.
2. Install filler so that when cured, it is flush at top surface of adjacent concrete. If necessary, overfill joint and remove excess when filler has cured.

M. Epoxy Crack Injection: Comply with manufacturer's written instructions and the following:

1. Clean areas to receive capping adhesive of oil, dirt, and other substances that would interfere with bond, and clean cracks with oil-free compressed air or low-pressure water to remove loose particles.
2. Place injection ports as recommended by epoxy manufacturer, spacing no farther apart than thickness of member being injected. Seal injection ports in place with capping adhesive.
3. Seal cracks at exposed surfaces with a ribbon of capping adhesive at least 1/4 inch (6 mm) thick by 1 inch (25 mm) wider than crack.
4. Inject cracks wider than 0.003 inch (0.075 mm) to a depth of 8 inches (200 mm) or to a width of less than 0.003 inch (0.075 mm), whichever is less.
5. Inject epoxy adhesive, beginning at widest part of crack and working toward narrower parts. Inject adhesive into ports to refusal, capping adjacent ports when they extrude epoxy. Cap injected ports and inject through adjacent ports until crack is filled.
6. After epoxy adhesive has set, remove injection ports and grind surfaces smooth.

N. Corrosion-Inhibiting Treatment: Apply by brush, roller, or airless spray in two coats at manufacturer's recommended application rate. Remove film of excess treatment by high-pressure washing before patching treated concrete[**or applying a sealer or overlay**].

1. Apply to the following: <**Insert locations where treatment is to be applied.**>

O. Polymer Overlay: Apply according to ACI 503.3.

1. Apply to traffic-bearing surfaces, including parking areas and walks.

P. Polymer Sealer: Apply by brush, roller, or airless spray at manufacturer's recommended application rate.

1. Apply to traffic-bearing surfaces, including parking areas and walks.

Q. Methylmethacrylate Sealer/Brighteners: Apply by brush, roller, or airless spray at manufacturer's recommended application rate.

1. Apply to exterior concrete surfaces that are exposed to view, excluding traffic-bearing surfaces.

R. Composite Structural Reinforcement Using Preimpregnated Fiber Sheet: Unless otherwise recommended by manufacturer, apply as follows:

1. Patch surface defects with epoxy mortar and allow to set before beginning reinforcement application.
2. Apply epoxy adhesive to a thickness of 1/16 inch (1.6 mm) to prepared concrete surfaces in areas where composite structural reinforcement will be applied.
3. Clean preimpregnated fiber sheet with acetone or other suitable solvent, and apply epoxy adhesive to a thickness of 1/16 inch (1.6 mm).
4. Apply adhesive-coated fiber sheet to adhesive-coated concrete within open time of epoxy adhesive, and roll with a hard rubber roller until fiber sheet is fully embedded in adhesive, air pockets are removed, and adhesive is forced out from beneath fiber sheet at edges.

5. Apply additional layers as indicated using same procedure.

S. Composite Structural Reinforcement Using Fiber Tow Sheet and Saturant: Unless otherwise recommended by manufacturer, apply as follows:

1. Apply epoxy primer using brush or short nap roller to prepared concrete surfaces in areas where composite structural reinforcement will be applied.
2. After primer has set, patch surface defects with epoxy filler and allow to set before beginning reinforcement application.
3. Apply epoxy saturant to [**fiber tow sheet**] [**or**] [**primed and patched surface**] with 3/8-inch- (10-mm-) nap roller. Apply fiber tow sheet to primed and patched surface while saturant is still wet, using pressure roller to remove air pockets. Remove paper backing from fiber tow sheet and apply additional epoxy as needed to fully saturate tow sheet.
4. Apply additional layers as indicated, fully saturating each with epoxy.
5. After saturant has cured, apply protective topcoat by [**brush**] [**roller**] [**or**] [**spray**].

3.4 FIELD QUALITY CONTROL

A. Testing Agency: [**Owner will engage**] [**Engage**] a qualified testing agency to sample materials and perform tests as follows:

1. Patching Mortar, Packaged Mixes: <**Insert number**> randomly selected samples tested according to ASTM C 928.
2. Patching Mortar, Field Mixed: <**Insert number**> randomly selected samples tested for compressive strength according to ASTM C 109/C 109M.
3. Concrete: As specified in Division 3 Section "[**Cast-in-Place Concrete**] [**Cast-in-Place Concrete (Limited Applications)**]."
4. Shotcrete: As specified in Division 3 Section "Shotcrete."
5. Grouted Preplaced Aggregate: Tested for compressive strength of grout according to ASTM C 942.

    a. Testing Frequency: One sample for each 25 cu. yd. (19 cu. m) of grout or fraction thereof, but not less than one sample for each day's work.

6. Joint Filler: Core drilled samples to verify proper installation.

    a. Testing Frequency: One sample for each 100 feet (30 m) of joint filled.
    b. Where samples are taken, fill holes with joint filler.

7. Epoxy Crack Injection: Core drilled samples to verify proper installation.

    a. Testing Frequency: [**3 samples from mockup and**]1 sample for each 100 feet (30 m) of crack injected.
    b. Where samples are taken, fill holes with epoxy mortar.

END OF SECTION 03930

Division 4 – Mansonry

SECTION 04810 - UNIT MASONRY ASSEMBLIES

PART 1 - GENERAL

1.1 RELATED DOCUMENTS

A. Drawings and general provisions of the Contract, including General and Supplementary Conditions and Division 1 Specification Sections, apply to this Section.

1.2 SUMMARY

A. This Section includes unit masonry assemblies consisting of the following:

1. Concrete masonry units (CMUs).
2. Decorative concrete masonry units.
3. Pre-faced concrete masonry units.
4. Concrete brick.
5. Face brick.
6. Building (common) brick.
7. Hollow brick.
8. Glazed brick.
9. Structural-clay facing tile.
10. Firebox brick.
11. Clay flue lining units.
12. Stone trim units.
13. Mortar and grout.
14. Reinforcing steel.
15. Masonry joint reinforcement.
16. Ties and anchors.
17. Embedded flashing.
18. Miscellaneous masonry accessories.
19. Masonry-cell insulation.
20. Cavity-wall insulation.

B. Related Sections include the following:

1. Division 2 Section "Unit Pavers" for exterior unit masonry paving.
2. Division 2 Section "Segmental Retaining Walls" for dry-laid, concrete unit retaining walls.
3. Division 4 Section "Glass Unit Masonry Assemblies" for glass block.
4. Division 7 Section "Bituminous Dampproofing" for dampproofing applied to cavity face of backup wythes of cavity walls.
5. Division 7 Section "Water Repellents" for water repellents applied to unit masonry assemblies.
6. Division 7 Section "Sheet Metal Flashing and Trim" for[**exposed**] sheet metal flashing.
7. Division 7 Section "Through-Penetration Firestop Systems" for firestopping at openings in masonry walls.

8. Division 7 Section "Fire-Resistive Joint Systems" for fire-resistive joint systems at heads of masonry walls.
9. Division 7 Section "Joint Sealants" for sealing control and expansion joints in unit masonry.
10. Division 9 Section "Brick Flooring" for interior brick flooring.
11. Division 9 Section "Chemical-Resistant Brick Flooring" for chemical-resistant, interior brick flooring.
12. Division 9 Section "Interior Stone Facing" for stone window stools.
13. Division 10 Section "Louvers and Vents" for wall vents (brick vents).

C. Products furnished, but not installed, under this Section include the following:

1. Dovetail slots for masonry anchors, installed under Division 3 Section "Cast-in-Place Concrete."
2. Anchor sections of adjustable masonry anchors for connecting to structural frame, installed under Division 5 Section "Structural Steel."

D. Products installed, but not furnished, under this Section include the following:

1. Cast-stone trim, furnished under Division 4 Section "Cast Stone."
2. Steel [**lintels**] [**and**] [**shelf angles**] for unit masonry, furnished under Division 5 Section "Metal Fabrications."
3. Manufactured reglets in masonry joints for metal flashing, furnished under Division 7 Section "Sheet Metal Flashing and Trim."

E. Allowances: The following are included under the allowances indicated as specified in Division 1 Section "Allowances":

1. Face brick under the Face Brick Allowances.
2. [**Preconstruction**] [**source quality-control**] [**and**] [**field quality-control**] testing under Testing and Inspecting Allowance.

1.3 DEFINITIONS

A. Reinforced Masonry: Masonry containing reinforcing steel in grouted cells.

1.4 PERFORMANCE REQUIREMENTS

A. Provide[**structural**] unit masonry that develops indicated net-area compressive strengths (f'_m) at 28 days.

B. Determine net-area compressive strength (f'_m) of masonry from average net-area compressive strengths of masonry units and mortar types (unit-strength method) according to [**Tables 1 and 2 in ACI 530.1/ASCE 6/TMS 602**] [**Table 21-D in the Uniform Building Code**].

C. Determine net-area compressive strength (f'_m) of masonry by testing masonry prisms according to [**ASTM C 1314**] [**UBC Standard 21-17**].

1.5 SUBMITTALS

A. Product Data: For each type of product indicated.

B. Shop Drawings: For the following:

1. Masonry Units: Show sizes, profiles, coursing, and locations of special shapes.
2. Stone Trim Units: Show sizes, profiles, and locations of each stone trim unit required.
3. Reinforcing Steel: Detail bending and placement of unit masonry reinforcing bars. Comply with ACI 315, "Details and Detailing of Concrete Reinforcement."[**Show elevations of reinforced walls.**]
4. Fabricated Flashing: Detail corner units, end-dam units, and other special applications.

C. Samples for Initial Selection: For the following:

1. Decorative concrete masonry units, in the form of small-scale units.
2. Face brick, in the form of straps of five or more bricks.
3. Colored mortar.
4. Weep holes/vents.

D. Samples for Verification: For each type and color of the following:

1. [**Exposed**] [**Decorative**] concrete masonry units.
2. Pre-faced concrete masonry units.
3. [**Face**] [**Hollow**] brick[**, in the form of straps of five or more bricks**].
4. Special brick shapes.
5. Glazed brick.
6. Glazed structural-clay tile.
7. [**Pigmented**] [**and**] [**colored-aggregate**] mortar. Make Samples using same sand and mortar ingredients to be used on Project**.**[**Label Samples to indicate types and amounts of pigments used.**]
8. Stone trim.
9. Weep holes/vents.
10. Accessories embedded in masonry.

E. List of Materials Used in Constructing Mockups: List generic product names together with manufacturers, manufacturers' product names, model numbers, lot numbers, batch numbers, source of supply, and other information as required to identify materials used. Include mix proportions for mortar and grout and source of aggregates.

1. Submittal is for information only. Neither receipt of list nor approval of mockup constitutes approval of deviations from the Contract Documents unless such deviations are specifically brought to the attention of Architect and approved in writing.

F. Qualification Data: For testing agency.

G. Material Certificates: Include statements of material properties indicating compliance with requirements including compliance with standards and type designations within standards. Provide for each type and size of the following:

1. Masonry units.

a. Include material test reports substantiating compliance with requirements.
b. For bricks, include size-variation data verifying that actual range of sizes falls within specified tolerances.
c. For exposed brick, include material test report for efflorescence according to ASTM C 67.
d. For surface-coated brick, include material test report for durability of surface appearance after 50-cycles of freezing and thawing per ASTM C 67[**or a list of addresses of buildings in Project's area where proposed brick has been used successfully and with a history of durability**].
e. For masonry units used in structural masonry, include data and calculations establishing average net-area compressive strength of units.

2. Cementitious materials. Include brand, type, and name of manufacturer.
3. Preblended, dry mortar mixes. Include description of type and proportions of ingredients.
4. Grout mixes. Include description of type and proportions of ingredients.
5. Reinforcing bars.
6. Joint reinforcement.
7. Anchors, ties, and metal accessories.

H. Mix Designs: For each type of mortar[**and grout**]. Include description of type and proportions of ingredients.

1. Include test reports, per [**ASTM C 780**] [**UBC Standard 21-16**], for mortar mixes required to comply with property specification.
2. Include test reports, per [**ASTM C 1019**] [**UBC Standard 21-18**], for grout mixes required to comply with compressive strength requirement.

I. Statement of Compressive Strength of Masonry: For each combination of masonry unit type and mortar type, provide statement of average net-area compressive strength of masonry units, mortar type, and resulting net-area compressive strength of masonry determined according to [**Tables 1 and 2 in ACI 530.1/ASCE 6/TMS 602**] [**Table 21-D in the Uniform Building Code**].

J. Cold-Weather Procedures: Detailed description of methods, materials, and equipment to be used to comply with cold-weather requirements.

1.6 QUALITY ASSURANCE

A. Testing Agency Qualifications: An independent agency qualified according to ASTM C 1093 for testing indicated, as documented according to ASTM E 548.

B. Source Limitations for Masonry Units: Obtain exposed masonry units of a uniform texture and color, or a uniform blend within the ranges accepted for these characteristics, through one source from a single manufacturer for each product required.

C. Source Limitations for Mortar Materials: Obtain mortar ingredients of a uniform quality, including color for exposed masonry, from a single manufacturer for each cementitious component and from one source or producer for each aggregate.

D. Preconstruction Testing Service: Owner will engage a qualified independent testing agency to perform preconstruction testing indicated below. Payment for these services will be made [**by Owner**] [**from the Testing and Inspecting Allowance, as authorized by Change Orders**]. Retesting of materials that fail to meet specified requirements shall be done at Contractor's expense.

1. Clay Masonry Unit Test: For each type of unit required, per ASTM C 67.
2. Concrete Masonry Unit Test: For each type of unit required, per ASTM C 140.
3. Mortar Test (Property Specification): For each mix required, per [**ASTM C 780**] [**UBC Standard 21-16**].
4. Grout Test (Compressive Strength): For each mix required, per [**ASTM C 1019**] [**UBC Standard 21-18**].
5. Prism Test: For each type of construction required, per [**ASTM C 1314**] [**UBC Standard 21-17**].

E. Fire-Resistance Ratings: Where indicated, provide materials and construction identical to those of assemblies with fire-resistance ratings determined per ASTM E 119 by a testing and inspecting agency, by equivalent concrete masonry thickness, or by other means, as acceptable to authorities having jurisdiction.

F. Sample Panels: Build sample panels to verify selections made under sample submittals and to demonstrate aesthetic effects. Comply with requirements in Division 1 Section "Quality Requirements" for mockups.

1. Build sample panels for [**each type of exposed unit masonry construction**] [**typical exterior wall**] [**typical interior wall**] [**typical exterior and interior walls**] in sizes approximately [**48 inches (1200 mm)**] [**60 inches (1500 mm)**] <**Insert size**> long by [**48 inches (1200 mm)**] <**Insert size**> high[**by full thickness**].
2. Where masonry is to match existing, erect panels adjacent and parallel to existing surface.
3. Clean[**one-half of**] exposed faces of panels with masonry cleaner indicated.
4. Protect approved sample panels from the elements with weather-resistant membrane.
5. Approval of sample panels is for color, texture, and blending of masonry units; relationship of mortar and sealant colors to masonry unit colors; tooling of joints; aesthetic qualities of workmanship; and other material and construction qualities specifically approved by Architect in writing.

    a. Approval of sample panels does not constitute approval of deviations from the Contract Documents contained in sample panels unless such deviations are specifically approved by Architect in writing.

G. Mockups: Build mockups to verify selections made under sample submittals and to demonstrate aesthetic effects[**and set quality standards for materials and execution**].

1. Build mockup of typical wall area as shown on Drawings.
2. Build mockups for [**each type of exposed unit masonry construction**] [**typical exterior wall**] [**typical interior wall**] [**typical exterior and interior walls**] in sizes approximately [**48 inches (1200 mm)**] [**60 inches (1500 mm)**] [**72 inches (1800 mm)**] [**96 inches (2400 mm)**] <**Insert size**> long by [**48 inches (1200 mm)**] [**60 inches (1500 mm)**] [**72 inches (1800 mm)**] <**Insert size**> high by full thickness, including face and backup wythes and accessories.

a. Include a sealant-filled joint at least 16 inches (400 mm) long in [**each**] [**exterior wall**] [**each exterior wall**] mockup.
b. Include lower corner of window opening[**framed with stone trim**] at upper corner of exterior wall mockup. Make opening approximately 12 inches (300 mm) wide by 16 inches (400 mm) high.
c. Include through-wall flashing installed for a 24-inch (600-mm) length in corner of exterior wall mockup approximately 16 inches (400 mm) down from top of mockup, with a 12-inch (300-mm) length of flashing left exposed to view (omit masonry above half of flashing).
d. Include [**metal**] [**wood**] studs, sheathing, veneer anchors, flashing, and weep holes in exterior masonry-veneer wall mockup.
e. Include [**glazed structural-clay tile**] [**pre-faced concrete masonry units**] on one face of interior unit masonry wall mockup.

3. Where masonry is to match existing, erect mockups adjacent and parallel to existing surface.
4. Clean[**one-half of**] exposed faces of mockups with masonry cleaner as indicated.
5. Protect accepted mockups from the elements with weather-resistant membrane.
6. Approval of mockups is for color, texture, and blending of masonry units; relationship of mortar and sealant colors to masonry unit colors; tooling of joints; and aesthetic qualities of workmanship.

    a. Approval of mockups is also for other material and construction qualities specifically approved by Architect in writing.
    b. Approval of mockups does not constitute approval of deviations from the Contract Documents contained in mockups unless such deviations are specifically approved by Architect in writing.

7. Approved mockups may become part of the completed Work if undisturbed at time of Substantial Completion.

H. Preinstallation Conference: Conduct conference at Project site to comply with requirements in Division 1 Section "Project Management and Coordination."

1.7 DELIVERY, STORAGE, AND HANDLING

A. Store masonry units on elevated platforms in a dry location. If units are not stored in an enclosed location, cover tops and sides of stacks with waterproof sheeting, securely tied. If units become wet, do not install until they are dry.

B. Store cementitious materials on elevated platforms, under cover, and in a dry location. Do not use cementitious materials that have become damp.

C. Store aggregates where grading and other required characteristics can be maintained and contamination avoided.

D. Deliver preblended, dry mortar mix in moisture-resistant containers designed for lifting and emptying into dispensing silo. Store preblended, dry mortar mix in delivery containers on elevated platforms, under cover, and in a dry location or in a metal dispensing silo with weatherproof cover.

E. Store masonry accessories, including metal items, to prevent corrosion and accumulation of dirt and oil.

1.8 PROJECT CONDITIONS

A. Protection of Masonry: During construction, cover tops of walls, projections, and sills with waterproof sheeting at end of each day's work. Cover partially completed masonry when construction is not in progress.

1. Extend cover a minimum of 24 inches (600 mm) down both sides and hold cover securely in place.
2. Where 1 wythe of multiwythe masonry walls is completed in advance of other wythes, secure cover a minimum of 24 inches (600 mm) down face next to unconstructed wythe and hold cover in place.

B. Do not apply uniform floor or roof loads for at least 12 hours and concentrated loads for at least 3 days after building masonry walls or columns.

C. Stain Prevention: Prevent grout, mortar, and soil from staining the face of masonry to be left exposed or painted. Immediately remove grout, mortar, and soil that come in contact with such masonry.

1. Protect base of walls from rain-splashed mud and from mortar splatter by spreading coverings on ground and over wall surface.
2. Protect sills, ledges, and projections from mortar droppings.
3. Protect surfaces of window and door frames, as well as similar products with painted and integral finishes, from mortar droppings.
4. Turn scaffold boards near the wall on edge at the end of each day to prevent rain from splashing mortar and dirt onto completed masonry.

D. Cold-Weather Requirements: Do not use frozen materials or materials mixed or coated with ice or frost. Do not build on frozen substrates. Remove and replace unit masonry damaged by frost or by freezing conditions. Comply with cold-weather construction requirements contained in [**ACI 530.1/ASCE 6/TMS 602**] [**Section 2104.3 in the Uniform Building Code**].

1. Cold-Weather Cleaning: Use liquid cleaning methods only when air temperature is 40 deg F (4 deg C) and above and will remain so until masonry has dried, but not less than 7 days after completing cleaning.

E. Hot-Weather Requirements: Comply with hot-weather construction requirements contained in ACI 530.1/ASCE 6/TMS 602.

PART 2 - PRODUCTS

2.1 MANUFACTURERS

A. In other Part 2 articles where titles below introduce lists, the following requirements apply to product selection:

1. Available Products: Subject to compliance with requirements, products that may be incorporated into the Work include, but are not limited to, products specified.
2. Products: Subject to compliance with requirements, provide one of the products specified.
3. Available Manufacturers: Subject to compliance with requirements, manufacturers offering products that may be incorporated into the Work include, but are not limited to, manufacturers specified.
4. Manufacturers: Subject to compliance with requirements, provide products by one of the manufacturers specified.

2.2 MASONRY UNITS, GENERAL

A. Defective Units: Referenced masonry unit standards may allow a certain percentage of units to exceed tolerances and to contain chips, cracks, or other defects exceeding limits stated in the standard. Do not uses units where such defects, including dimensions that vary from specified dimensions by more than stated tolerances, will be exposed in the completed Work or will impair the quality of completed masonry.

2.3 CONCRETE MASONRY UNITS (CMUs)

A. Shapes: Provide shapes indicated and as follows:

1. Provide special shapes for lintels, corners, jambs, sashes, movement joints, headers, bonding, and other special conditions.
2. Provide [**square-edged**] [**bullnose**] units for outside corners, unless otherwise indicated.

B. Integral Water Repellent: Provide units made with integral water repellent [**for exposed units**] [**and**] [**where indicated**].

1. Integral Water Repellent: Liquid polymeric, integral water-repellent admixture that does not reduce flexural bond strength. Units made with integral water repellent, when tested as a wall assembly made with mortar containing integral water-repellent manufacturer's mortar additive according to ASTM E 514, with test period extended to 24 hours, show no visible water or leaks on the back of test specimen.

a. [**Available**]Products:

1) Addiment Incorporated; Block Plus W-10.
2) Grace Construction Products, a unit of W. R. Grace & Co. - Conn.; Dry-Block.
3) Master Builders, Inc.; Rheopel.
4) <**Insert manufacturer's name; product name or designation.**>

C. Concrete Masonry Units: [**ASTM C 90**] [**UBC Standard 21-4**].

1. Unit Compressive Strength: Provide units with minimum average net-area compressive strength of [**1900 psi (13.1 MPa)**] [**2150 psi (14.8 MPa)**] [**2800 psi (19.3 MPa)**] [**3050 psi (21.0 MPa)**] <**Insert value**>.

2. Weight Classification: [**Lightweight**] [**Medium weight**] [**Normal weight**][**, unless otherwise indicated**].
3. Size (Width): Manufactured to dimensions 3/8 inch less than nominal dimensions.
4. Size (Width): Manufactured to the following dimensions:

    a. 100 mm nominal; [**90**] [**92**] mm actual.
    b. 150 mm nominal; [**140**] [**143**] mm actual.
    c. 200 mm nominal; [**190**] [**194**] mm actual.
    d. 250 mm nominal; [**240**] [**244**] mm actual.
    e. 300 mm nominal; [**290**] [**295**] mm actual.
    f. 400 mm nominal; [**390**] [**396**] mm actual.

5. Exposed Faces: Provide color and texture matching the range represented by Architect's sample.
6. Faces to Receive Plaster: Where units are indicated to receive a direct application of plaster, provide textured-face units made with gap-graded aggregates.

D. Decorative Concrete Masonry Units: [**ASTM C 90**] [**UBC Standard 21-4**].

1. Unit Compressive Strength: Provide units with minimum average net-area compressive strength of [**1900 psi (13.1 MPa)**] [**2150 psi (14.8 MPa)**] [**2800 psi (19.3 MPa)**] [**3050 psi (21.0 MPa)**] <**Insert value**>.
2. Weight Classification: [**Lightweight**] [**Medium weight**] [**Normal weight**].
3. Size (Width): Manufactured to dimensions specified in "Concrete Masonry Units" Paragraph above.
4. Pattern and Texture:

    a. Standard pattern, ground finish.[**Match Architect's samples.**]
    b. Standard pattern, split-face finish.[**Match Architect's samples.**]
    c. Standard pattern, split-ribbed finish.[**Match Architect's samples.**]
    d. Scored vertically so units laid in running bond appear as square units laid in stacked bond, standard finish.[**Match Architect's samples.**]
    e. Triple scored vertically so units laid in running bond appear as vertical units laid in stacked bond (soldier courses), standard finish.[**Match Architect's samples.**]

5. Colors: [**As indicated by manufacturer's designations**] [**Match Architect's samples**] [**As selected by Architect from manufacturer's full range**].
6. Special Aggregate: Provide units made with aggregate matching aggregate in Architect's sample.
7. [**Available**]Products:

    a. <**Insert, in separate subparagraphs, manufacturer's name; product name or designation.**>

E. Pre-faced Concrete Masonry Units: Lightweight [**hollow**] [**solid**] concrete units complying with [**ASTM C 90**] [**UBC Standard 21-4**], with manufacturer's standard smooth resinous facing complying with ASTM C 744.

1. Unit Compressive Strength: Provide units with minimum average net-area compressive strength of [**1900 psi (13.1 MPa)**] [**2150 psi (14.8 MPa)**] [**2800 psi (19.3 MPa)**] [**3050 psi (21.0 MPa)**] <**Insert value**>.

2. Size: Manufactured to dimensions specified in "Concrete Masonry Units" Paragraph above, but with pre-faced surfaces having 1/16-inch- (1.5-mm-) wide returns of facing to create 1/4-inch- (6.5-mm-) wide mortar joints with modular coursing.
3. Colors and Patterns: [**As indicated by manufacturer's designations**] [**Match Architect's samples**] [**As selected by Architect from manufacturer's full range**].
4. [**Available**]Products:

    a. <**Insert, in separate subparagraphs, manufacturer's name; product name or designation.**>

F. Concrete Building Brick: [**ASTM C 55**] [**UBC Standard 21-3**].

1. Unit Compressive Strength: Provide units with minimum average net-area compressive strength of [**2500 psi (17.3 MPa)**] [**3500 psi (24.1 MPa)**] <**Insert value**>.
2. Weight Classification: [**Lightweight**] [**Medium weight**] [**Normal weight**].
3. Size (Actual Dimensions): 3-5/8 inches (92 mm) wide by [**2-1/4 inches (57 mm)**] [**2-3/4 inches (70 mm)**] [**3-5/8 inches (92 mm)**] high by 7-5/8 inches (194 mm) long.
4. Size (Actual Dimensions): 90 mm wide by [**57**] [**70**] [**90**] mm high by 190 mm long.

2.4 [**CONCRETE**] [**AND**] [**MASONRY**] LINTELS

A. General: Provide either concrete or masonry lintels, at Contractor's option, complying with requirements below.

B. Concrete Lintels: Precast units made from concrete matching concrete masonry units in color, texture, and compressive strength and with reinforcing bars indicated or required to support loads indicated. Cure precast lintels by same method used for concrete masonry units.

C. Concrete Lintels: Precast or formed-in-place concrete lintels complying with requirements in Division 3 Section "Cast-in-Place Concrete."

D. Masonry Lintels: Prefabricated or built-in-place masonry lintels made from bond beam concrete masonry units with reinforcing bars placed as indicated and filled with coarse grout. Cure precast lintels before handling and installing. Temporarily support built-in-place lintels until cured.

2.5 BRICK

A. General: Provide shapes indicated and as follows:

1. For ends of sills and caps and for similar applications that would otherwise expose unfinished brick surfaces, provide units without cores or frogs and with exposed surfaces finished.
2. Provide special shapes for applications where stretcher units cannot accommodate special conditions, including those at corners, movement joints, bond beams, sashes, and lintels.
3. Provide special shapes for applications requiring brick of size, form, color, and texture on exposed surfaces that cannot be produced by sawing.
4. Provide special shapes for applications where shapes produced by sawing would result in sawed surfaces being exposed to view.

B. Face Brick: [**ASTM C 216**] [**UBC Standard 21-1**], Grade [**SW**] [**MW or SW**], Type [**FBX**] [**FBS**] [**FBA**].

1. Unit Compressive Strength: Provide units with minimum average net-area compressive strength of [**3000 psi (20.7 MPa)**] [**4400 psi (30.3 MPa)**] [**5500 psi (37.9 MPa)**] [**6400 psi (44.1 MPa)**] [**8000 psi (55.2 MPa)**] [**8400 psi (57.9 MPa)**] <**Insert value**>.
2. Initial Rate of Absorption: Less than 30 g/30 sq. in. (30 g/194 sq. cm) per minute when tested per ASTM C 67.
3. Efflorescence: Provide brick that has been tested according to ASTM C 67 and is rated "not effloresced."
4. Surface Coating: Brick with colors or textures produced by application of coatings shall withstand 50 cycles of freezing and thawing per ASTM C 67 with no observable difference in the applied finish when viewed from 10 feet (3 m)[**or shall have a history of successful use in Project's area**].
5. Size (Actual Dimensions): [**3-1/2 inches (89 mm) wide by 2-1/4 inches (57 mm) high by 7-1/2 inches (190 mm) long**] [**or**] [**3-5/8 inches (92 mm) wide by 2-1/4 inches (57 mm) high by 7-5/8 inches (194 mm) long**].
6. Size (Actual Dimensions): [**3-1/2 inches (89 mm)**] [**or**] [**3-5/8 inches (92 mm)**] wide by 2-1/4 inches (57 mm) high by **8 inches (203 mm)** long.
7. Size (Actual Dimensions): [**3-1/2 inches (89 mm) wide by 2-1/4 inches (57 mm) high by 11-1/2 inches (292 mm) long**] [**or**] [**3-5/8 inches (92 mm) wide by 2-1/4 inches (57 mm) high by 11-5/8 inches (295 mm) long**].
8. Size (Actual Dimensions): [**2-3/4 inches (70 mm) wide by 2-3/4 inches (70 mm) high by 8 inches (203 mm) long**] [**or**] [**3 inches (76 mm) wide by 2-3/4 inches (70 mm) high by 8 inches (203 mm) long**].
9. Size (Actual Dimensions): [**2-3/4 inches (70 mm) wide by 2-5/8 inches (67 mm) high by 9-5/8 inches (244 mm) long**] [**or**] [**3 inches (76 mm) wide by 2-3/4 inches (70 mm) high by 9-5/8 inches (244 mm) long**].
10. Size (Actual Dimensions): [**3-1/2 inches (89 mm) wide by 2-3/4 inches (70 mm) high by 7-1/2 inches (190 mm) long**] [**or**] [**3-5/8 inches (92 mm) wide by 2-13/16 inches (71 mm) high by 7-5/8 inches (194 mm) long**].
11. Size (Actual Dimensions): [**3-1/2 inches (89 mm) wide by 2-3/4 inches (70 mm) high by 8 inches (203 mm) long**] [**or**] [**3-5/8 inches (92 mm) wide by 2-13/16 inches (71 mm) high by 8 inches (203 mm) long**].
12. Size (Actual Dimensions): 3-5/8 inches (92 mm) wide by 2-5/8 inches (67 mm) high by 9-5/8 inches (244 mm) long.
13. Size (Actual Dimensions): [**3-1/2 inches (89 mm) wide by 2-3/4 inches (70 mm) high by 11-1/2 inches (292 mm) long**] [**or**] [**3-5/8 inches (92 mm) wide by 2-13/16 inches (71 mm) high by 11-5/8 inches (295 mm) long**].
14. Size (Actual Dimensions): 3 inches (76 mm) wide by 3-5/8 inches (92 mm) high by 11-5/8 inches (295 mm) long.
15. Size (Actual Dimensions): [**3-1/2 inches (89 mm) wide by 3-1/2 inches (89 mm) high by 7-1/2 inches (190 mm) long**] [**or**] [**3-5/8 inches (92 mm) wide by 3-5/8 inches (92 mm) high by 7-5/8 inches (194 mm) long**].
16. Size (Actual Dimensions): [**3-1/2 inches (89 mm) wide by 3-1/2 inches (89 mm) high by 11-1/2 inches (292 mm) long**] [**or**] [**3-5/8 inches (92 mm) wide by 3-5/8 inches (92 mm) high by 11-5/8 inches (295 mm) long**].
17. Size (Actual Dimensions): [**3-1/2 inches (89 mm) wide by 7-1/2 inches (190 mm) high by 7-1/2 inches (190 mm) long**] [**or**] [**3-5/8 inches (92 mm) wide by 7-5/8 inches (194 mm) high by 7-5/8 inches (194 mm) long**].

18. Size (Actual Dimensions): 90 mm wide by [**57**] [**70**] [**90**] [**190**] mm high by [**190**] [**290**] mm long.
19. Application: Use where brick is exposed, unless otherwise indicated.
20. [**Where shown to "match existing,"**]provide face brick matching color range, texture, and size of existing adjacent brickwork.

    a. <**Insert information on existing brick if known.**>

21. Color and Texture: [**Medium brown, wire-cut**] [**Full-range red, sand molded**] [**Buff, velour**] [**Match Architect's samples**] [**As selected by Architect**].
22. [**Available**]Products:

    a. <**Insert, in separate subparagraphs, manufacturer's name; product name or designation for acceptable face brick.**>

C. Building (Common) Brick: [**ASTM C 62**] [**UBC Standard 21-1**], Grade [**SW**] [**MW or SW**] [**NW, MW, or SW**].

1. Unit Compressive Strength: Provide units with minimum average net-area compressive strength of [**3000 psi (20.7 MPa)**] [**4400 psi (30.3 MPa)**] [**5500 psi (37.9 MPa)**] [**6400 psi (44.1 MPa)**] [**8000 psi (55.2 MPa)**] [**8400 psi (57.9 MPa)**] <**Insert value**>.
2. Size: Match size of face brick.
3. Size (Actual Dimensions): [**3-1/2 inches (89 mm) wide by 2-1/4 inches (57 mm) high by 7-1/2 inches (190 mm) long**] [**or**] [**3-5/8 inches (92 mm) wide by 2-1/4 inches (57 mm) high by 7-5/8 inches (194 mm) long**].
4. Size (Actual Dimensions): 90 mm wide by 57 mm high by 190 mm long.
5. Application: Use where brick is indicated for concealed locations.[**Face brick complying with requirements for grade, compressive strength, and size indicated for building brick may be substituted for building brick.**]

D. Hollow Brick: [**ASTM C 652**] [**UBC Standard 21-1**], Grade [**SW**] [**MW or SW**], Class [**H40V (void areas between 25 and 40 percent of gross cross-sectional area)**] [**H60V (void areas between 40 and 60 percent of gross cross-sectional area)**], Type [**HBX**] [**HBS**] [**HBA**] [**HBB**].

1. Unit Compressive Strength: Provide units with minimum average net-area compressive strength of [**3000 psi (20.7 MPa)**] [**4400 psi (30.3 MPa)**] [**5500 psi (37.9 MPa)**] [**6400 psi (44.1 MPa)**] [**8000 psi (55.2 MPa)**] [**8400 psi (57.9 MPa)**] <**Insert value**>.
2. Efflorescence: Provide brick that has been tested according to ASTM C 67 and is rated "not effloresced."
3. Surface Coating: Brick with colors or textures produced by application of coatings shall withstand 50 cycles of freezing and thawing per ASTM C 67 with no observable difference in the applied finish when viewed from 10 feet (3 m)[**or shall have a history of successful use in Project's area**].
4. Size (Actual Dimensions): [**5-1/2 inches (140 mm) wide by 3-1/2 inches (89 mm) high by 11-1/2 inches (292 mm) long**] [**or**] [**5-5/8 inches (143 mm) wide by 3-5/8 inches (92 mm) high by 11-5/8 inches (295 mm) long**].
5. Size (Actual Dimensions): [**7-1/2 inches (190 mm) wide by 3-1/2 inches (89 mm) high by 11-1/2 inches (292 mm) long**] [**or**] [**7-5/8 inches (194 mm) wide by 3-5/8 inches (92 mm) high by 11-5/8 inches (295 mm) long**].

6. Size (Actual Dimensions): [**5-1/2 inches (140 mm) wide by 3-1/2 inches (89 mm) high by 15-1/2 inches (394 mm) long**] [**or**] [**5-5/8 inches (143 mm) wide by 3-5/8 inches (92 mm) high by 15-5/8 inches (397 mm) long**].
7. Size (Actual Dimensions): [**7-1/2 inches (190 mm) wide by 3-1/2 inches (89 mm) high by 15-1/2 inches (394 mm) long**] [**or**] [**7-5/8 inches (194 mm) wide by 3-5/8 inches (92 mm) high by 15-5/8 inches (397 mm) long**].
8. Size (Actual Dimensions): 4-5/8 inches (117 mm) wide by 2-3/4 inches (70 mm) high by 9-5/8 inches (244 mm) long.
9. Size (Actual Dimensions): [**140**] [**190**] mm wide by 90 mm high by 290 mm long.
10. Application: Use where brick is exposed, unless otherwise indicated.
11. [**Where shown to "match existing,"**]provide hollow brick matching color range, texture, and size of existing adjacent brickwork.

    a. <**Insert information on existing brick if known.**>

12. Color and Texture: [**Medium brown, wire-cut**] [**Full-range red, smooth texture**] [**Buff, velour**] [**Match Architect's samples**] [**As selected by Architect**].
13. [**Available**]Products:

    a. <**Insert, in separate subparagraphs, manufacturer's name; product name or designation for acceptable hollow brick.**>

E. Glazed Face Brick: [**ASTM C 216**] [**UBC Standard 21-1**], Grade [**SW**] [**MW or SW**], Type [**FBX**] [**FBS**] [**FBA**]; with glaze complying with ASTM C 126.

F. Glazed Face Brick: ASTM C 1405, Class [**Exterior**] [**Interior**], Grade [**S (Select)**] [**SS (Select Sized or Ground Edge)**].

G. Glazed Face Brick: Either ASTM C 1405, Class [**Exterior**] [**Interior**], Grade S (Select) or [**ASTM C 216**] [**UBC Standard 21-1**], Grade [**SW**] [**MW or SW**], Type FBX; with glaze complying with ASTM C 126.

H. Glazed Hollow Brick: Hollow brick complying with [**ASTM C 652**] [**UBC Standard 21-1**], Grade [**SW**] [**MW or SW**], Class [**H40V (void areas between 25 and 40 percent of gross cross-sectional area)**] [**H60V (void areas between 40 and 60 percent of gross cross-sectional area)**], Type [**HBX**] [**HBS**] [**HBA**]; with glaze complying with ASTM C 126.

1. Size (Actual Dimensions): [**3-1/2 inches (89 mm) wide by 2-1/4 inches (57 mm) high by 7-1/2 inches (190 mm) long**] [**or**] [**3-5/8 inches (92 mm) wide by 2-1/4 inches (57 mm) high by7-5/8 inches (194 mm) long**].
2. Size (Actual Dimensions): [**3-1/2 inches (89 mm)**] [**or**] [**3-5/8 inches (92 mm)**] wide by 2-1/4 inches (57 mm) high by **8 inches (203 mm)** long.
3. Size (Actual Dimensions): [**3-1/2 inches (89 mm) wide by 2-3/4 inches (70 mm) high by 7-1/2 inches (190 mm) long**] [**or**] [**3-5/8 inches (92 mm) wide by 2-13/16 inches (71 mm) high by 7-5/8 inches (194 mm) long**].
4. Size (Actual Dimensions): [**3-1/2 inches (89 mm) wide by 2-3/4 inches (70 mm) high by 8 inches (203 mm) long**] [**or**] [**3-5/8 inches (92 mm) wide by 2-13/16 inches (71 mm) high by 8 inches (203 mm) long**].
5. Size (Actual Dimensions): [**3-1/2 inches (89 mm) wide by 2-3/4 inches (70 mm) high by 11-1/2 inches (292 mm) long**] [**or**] [**3-5/8 inches (92 mm) wide by 2-13/16 inches (71 mm) high by 11-5/8 inches (295 mm) long**].

6. Size (Actual Dimensions): [**3-1/2 inches (89 mm) wide by 7-1/2 inches (190 mm) high by 7-1/2 inches (190 mm) long**] [**or**] [**3-5/8 inches (92 mm) wide by 7-5/8 inches (194 mm) high by 7-5/8 inches (194 mm) long**].
7. Size (Actual Dimensions): 5-5/8 inches (143 mm) wide by 3-5/8 inches (92 mm) high by 11-5/8 inches (295 mm) long.
8. Size (Actual Dimensions): 7-5/8 inches (194 mm) wide by 3-5/8 inches (92 mm) high by 11-5/8 inches (295 mm) long.
9. Size (Actual Dimensions): 90 mm wide by [**57**] [**70**] [**90**] [**190**] mm high by [**190**] [**290**] mm long.
10. Size (Actual Dimensions): [**140**] [**190**] mm wide by 90 mm high by 290 mm long.
11. Provide Type I (single-faced units) where only one finished face is exposed when units are installed, and Type II (double-faced units) where two opposite finished faces are exposed when units are installed.
12. Colors: [**As indicated by manufacturer's designations**] [**Match Architect's samples**] [**As selected by Architect from manufacturer's full range**].
13. [**Available**]Products:

    a. <**Insert, in separate subparagraphs, manufacturer's name; product name or designation.**>

2.6 STRUCTURAL-CLAY FACING TILE

A. General:

1. Provide solid, multicored, or hollow units, with shape and direction of cores optional, unless otherwise indicated.
2. Provide multicored units designed for use in reinforced, grouted masonry; either with vertical cores and with webs notched to receive horizontal reinforcement, or with horizontal cores and with holes in bed shells for placement of grout and to receive vertical reinforcement.
3. Where indicated for exterior applications, provide units recommended by manufacturer for exterior use in Project's location.
4. Provide special shapes where required for corners, jambs, coved bases, sills, and other special conditions indicated, including applications that cannot be produced by sawing standard units.

    a. Provide [**bullnose**] [**square-edged**] units for outside corners, unless otherwise indicated.
    b. Provide coved internal corners.
    c. Provide recessed, coved base units.

5. Where direct application of plaster is indicated or where bonded to backup masonry, provide units with rough, combed, or scored faces.

B. Glazed Structural-Clay Facing Tile: ASTM C 126, Grade [**S (Select)**] [**SS (Select Sized or Ground Edged)**].

1. Sizes: 6T Series with actual face dimensions of 5-1/6 inches (131 mm) high by 11-3/4 inches (298 mm) long by widths indicated.

2. Sizes: 8W Series with actual face dimensions of 7-3/4 inches (197 mm) high by 15-3/4 inches (400 mm) long by widths indicated.
3. Sizes: 4W Series with actual face dimensions of 7-3/4 inches (197 mm) high by 7-3/4 inches (197 mm) long by 3-3/4 inches (95 mm) wide.
4. Provide Type I (single-faced units) where only one finished face is exposed when units are installed, and Type II (double-faced units) where two opposite finished faces are exposed when units are installed.
5. Provide special units glazed on ends and tops, as well as faces for corners, jambs, sills, pilasters, columns, and other applications indicated, where glazed units are exposed on other surfaces and faces.
6. Colors and Patterns: [**As indicated by manufacturer's designations**] [**Match Architect's samples**] [**As selected by Architect from manufacturer's full range**].
7. [**Available**]Products:

    a. <**Insert, in separate subparagraphs, manufacturer's name; product name or designation.**>

C. Unglazed Structural-Clay Facing Tile: ASTM C 212, Type [**FTX**] [**FTS**], [**Standard**] [**Special-Duty**] class.

1. Number of Faces: Single faced where only one finished face is exposed when units are installed.
2. Number of Faces: Double faced where both finished faces are exposed when units are installed.
3. Size: As indicated.
4. [**Available**]Products:

    a. <**Insert, in separate subparagraphs, manufacturer's name; product name or designation.**>

2.7 FIREPLACE AND CHIMNEY LINING UNITS

A. Firebox Brick: ASTM C 1261, size required to produce lining thickness indicated.

B. Clay Flue Lining Units: ASTM C 315.

2.8 STONE TRIM UNITS

A. Granite: ASTM C 615.

1. Description: [**Fine**] [**Medium**]-grained, [**white**] [**pink**] [**gray**] [**black**] stone.[**Uniform pattern, without veining**].

B. Limestone: ASTM C 568, Classification [**I Low**] [**II Medium**] [**III High**]-Density.

1. Variety and Sources: Indiana oolitic limestone quarried in Lawrence, Monroe, or Owen Counties, Indiana.

a. Grade and Color: [**Select, buff**] [**Select, gray**] [**Standard, buff**] [**Standard, gray**] [**Rustic, buff**] [**Rustic, gray**] [**Variegated**], according to grade and color classification established by ILI.

C. Marble: ASTM C 503, Classification [**I Calcite**] [**II Dolomite**] [**III Serpentine**] [**IV Travertine**].

1. Description: Uniform, fine- to medium-grained, white stone with only slight veining.

D. Quartz-Based Stone: ASTM C 616, Classification[**I Sandstone**] [**II Quartzitic Sandstone**] [**III Quartzite**].

E. Varieties and Sources: Subject to compliance with requirements, provide[**one of**] the following:

1. <**Insert, in separate subparagraphs, names of varieties and producers, distributors, or importers.**>

F. Finish: [**Polished**] [**Honed**] [**Smooth**] [**Machine tooled, 4 bats per 1 inch (25 mm)**] [**Machine tooled, 6 bats per 1 inch (25 mm)**] [**Machine tooled, 8 bats per 1 inch (25 mm)**] [**Chat sawed**] [**Split face**] [**Rock face (pitched face)**] <**Insert finish**>.

1. Finish for [**Tops of Sills**] [**and**] [**Soffits of Lintels**]: [**Sand rubbed**] [**Split face**] <**Insert finish**>.

G. Provide stone units accurately shaped, with exposed faces dressed true, and with beds and joints at right angles to faces.

1. For granite, comply with recommendations in NBGQA's "Specifications for Architectural Granite."
2. For limestone, comply with recommendations in ILI's "Indiana Limestone Handbook."
3. For marble, comply with recommendations in MIA's "Dimensional Stone--Design Manual IV."

2.9 MORTAR AND GROUT MATERIALS

A. Portland Cement: ASTM C 150, Type I or II, except Type III may be used for cold-weather construction. Provide natural color or white cement as required to produce mortar color indicated.

B. Hydrated Lime: [**ASTM C 207**] [**UBC Standard 21-13**], Type S.

C. Portland Cement-Lime Mix: Packaged blend of portland cement complying with ASTM C 150, Type I or Type III, and hydrated lime complying with ASTM C 207, Type S.

D. Masonry Cement: [**ASTM C 91**] [**UBC Standard 21-11**].

1. [**Available**]Products:

a. Capital Materials Corporation; Flamingo Color Masonry Cement.
b. Essroc, Italcementi Group; [**Brixment**] [**or**] [**Velvet**].

c. Holcim (US) Inc.; [**Mortamix Masonry Cement**] [**Rainbow Mortamix Custom Buff Masonry Cement**] [**White Mortamix Masonry Cement**].
d. Lafarge North America Inc.; [**Magnolia Masonry Cement**] [**Lafarge Masonry Cement**] [**Florida Super Masonry**] [**Trinity Super White Masonry Type S**] [**Trinity White Masonry Type N**].
e. Lehigh Cement Company; [**Lehigh Masonry Cement**] [**Lehigh White Masonry Cement**].
f. National Cement Company, Inc.; Coosa Masonry Cement.
g. <**Insert manufacturer's name; product name or designation.**>

E. Mortar Cement: [**ASTM C 1329**] [**UBC Standard 21-14**].

1. [**Available**]Products:

a. Lafarge North America Inc.; [**Lafarge Mortar Cement**] [**or**] [**Magnolia Superbond Mortar Cement**].
b. <**Insert manufacturer's name; product name or designation.**>

F. Mortar Pigments: Natural and synthetic iron oxides and chromium oxides, compounded for use in mortar mixes. Use only pigments with a record of satisfactory performance in masonry mortar.

1. [**Available**]Products:

a. Bayer Corporation, Industrial Chemicals Div.; Bayferrox Iron Oxide Pigments.
b. Davis Colors; True Tone Mortar Colors.
c. Solomon Grind-Chem Services, Inc.; SGS Mortar Colors.
d. <**Insert manufacturer's name; product name or designation.**>

G. Colored Cement Product: Packaged blend made from [**portland cement and lime**] [**masonry cement**] [**or**] [**mortar cement**] and mortar pigments, all complying with specified requirements, and containing no other ingredients.

1. Formulate blend as required to produce color indicated or, if not indicated, as selected from manufacturer's standard colors.
2. Pigments shall not exceed 10 percent of portland cement by weight.
3. Pigments shall not exceed 5 percent of [**masonry cement**] [**or**] [**mortar cement**] by weight.
4. [**Available**]Products:

a. Colored Portland Cement-Lime Mix:

1) Capital Materials Corporation; Riverton Portland Cement Lime Custom Color.
2) Holcim (US) Inc.; Rainbow Mortamix Custom Color Cement/Lime.
3) Lafarge North America Inc.; Eaglebond.
4) Lehigh Cement Company; Lehigh Custom Color Portland/Lime Cement.
5) <**Insert manufacturer's name; product name or designation.**>

b. Colored Masonry Cement:

1) Capital Materials Corporation; Flamingo Color Masonry Cement.
2) Essroc, Italcementi Group; Brixment-in-Color.
3) Holcim (US) Inc.; Rainbow Mortamix Custom Color Masonry Cement.
4) Lafarge North America Inc.; [**Florida Custom Color Masonry**] [**or**] [**Magnolia Masonry Cement**].
5) Lehigh Cement Company; Lehigh Custom Color Masonry Cement.
6) National Cement Company, Inc.; Coosa Masonry Cement.
7) <**Insert manufacturer's name; product name or designation.**>

c. Colored Mortar Cement:

1) Lafarge North America Inc.; Magnolia Superbond Mortar Cement.
2) <**Insert manufacturer's name; product name or designation.**>

H. Aggregate for Mortar: ASTM C 144.

1. For mortar that is exposed to view, use washed aggregate consisting of natural sand or crushed stone.
2. For joints less than 1/4 inch (6.5 mm) thick, use aggregate graded with 100 percent passing the No. 16 (1.18-mm) sieve.
3. White-Mortar Aggregates: Natural white sand or crushed white stone.
4. Colored-Mortar Aggregates: Natural sand or crushed stone of color necessary to produce required mortar color.

I. Aggregate for Grout: ASTM C 404.

J. Epoxy Pointing Mortar: ASTM C 395, epoxy-resin-based material formulated for use as pointing mortar for structural-clay tile facing units (and approved for such use by manufacturer of units); in color indicated or, if not otherwise indicated, as selected by Architect from manufacturer's colors.

K. Refractory Mortar Mix: Ground fireclay or non-water-soluble, calcium aluminate, medium-duty refractory mortar that passes ASTM C 199 test; or an equivalent product acceptable to authorities having jurisdiction.

L. Cold-Weather Admixture: Nonchloride, noncorrosive, accelerating admixture complying with ASTM C 494/C 494M, Type C, and recommended by manufacturer for use in masonry mortar of composition indicated.

1. [**Available**]Products:

a. Addiment Incorporated; Mortar Kick.
b. Euclid Chemical Company (The); Accelguard 80.
c. Grace Construction Products, a unit of W. R. Grace & Co. - Conn.; Morset.
d. Sonneborn, Div. of ChemRex; Trimix-NCA.
e. <**Insert manufacturer's name; product name or designation.**>

M. Water-Repellent Admixture: Liquid water-repellent mortar admixture intended for use with concrete masonry units, containing integral water repellent by same manufacturer.

1. [**Available**]Products:

a. Addiment Incorporated; Mortar Tite.
b. Grace Construction Products, a unit of W. R. Grace & Co. - Conn.; Dry-Block Mortar Admixture.
c. Master Builders, Inc.; [**Color Cure Mortar Admix**] [**or**] [**Rheomix Rheopel**].
d. <**Insert manufacturer's name; product name or designation.**>

N. Water: Potable.

2.10 REINFORCEMENT

A. Uncoated Steel Reinforcing Bars: ASTM A 615/A 615M or ASTM A 996/A 996M, Grade 60 (Grade 420).

B. Masonry Joint Reinforcement, General: [**ASTM A 951**] [**UBC Standard 21-10**].

1. Interior Walls: [**Mill-**] [**Hot-dip**] galvanized, carbon steel.
2. Exterior Walls: [**Hot-dip galvanized, carbon**] [**Stainless**] steel.
3. Wire Size for Side Rods: [**W1.7 or 0.148-inch (3.8-mm)**] [**W2.8 or 0.188-inch (4.8-mm)**] diameter.
4. Wire Size for Cross Rods: [**W1.7 or 0.148-inch (3.8-mm)**] [**W2.8 or 0.188-inch (4.8-mm)**] diameter.
5. Wire Size for Veneer Ties: [**W1.7 or 0.148-inch (3.8-mm)**] [**W2.8 or 0.188-inch (4.8-mm)**] diameter.
6. Spacing of Cross Rods, Tabs, and Cross Ties: Not more than 16 inches (407 mm) o.c.
7. Provide in lengths of not less than 10 feet (3 m)[**, with prefabricated corner and tee units**].

C. Masonry Joint Reinforcement for Single-Wythe Masonry: Either ladder or truss type with single pair of side rods.

D. Masonry Joint Reinforcement for Multiwythe Masonry:

1. Ladder type with 1 side rod at each face shell of hollow masonry units more than 4 inches (100 mm) in width, plus [**1 side rod**] [**2 side rods**] at each wythe of masonry 4 inches (100 mm) or less in width.
2. Tab type, either ladder or truss design, with 1 side rod at each face shell of backing wythe and with rectangular tabs sized to extend at least halfway through facing wythe but with at least 5/8-inch (16-mm) cover on outside face.
3. Adjustable (two-piece) type, either ladder or truss design, with one side rod at each face shell of backing wythe and with separate ties that extend into facing wythe. Ties have two hooks that engage eyes or slots in reinforcement and resist movement perpendicular to wall. Ties extend at least halfway through facing wythe but with at least 5/8-inch (16-mm) cover on outside face.[**Ties have hooks or clips to engage a continuous horizontal wire in the facing wythe.**]

E. Masonry Joint Reinforcement for Veneers Anchored with Seismic Masonry-Veneer Anchors: Single 0.188-inch- (4.8-mm-) diameter, [**hot-dip galvanized, carbon**] [**stainless**]-steel continuous wire.

2.11 TIES AND ANCHORS

A. Materials: Provide ties and anchors specified in subsequent paragraphs that are made from materials that comply with eight subparagraphs below, unless otherwise indicated.

1. Mill-Galvanized, Carbon-Steel Wire: ASTM A 82; with ASTM A 641/A 641M, Class 1 coating.
2. Hot-Dip Galvanized, Carbon-Steel Wire: ASTM A 82; with ASTM A 153/A 153M, Class B-2 coating.
3. Stainless-Steel Wire: ASTM A 580/A 580M, Type [**304**] [**316**].
4. Galvanized Steel Sheet: ASTM A 653/A 653M, Commercial Steel, G60 (Z180) zinc coating.
5. Steel Sheet, Galvanized after Fabrication: ASTM A 1008/A 1008M, Commercial Steel, hot-dip galvanized after fabrication to comply with ASTM A 153/A 153M.
6. Stainless-Steel Sheet: ASTM A 666, Type [**304**] [**316**].
7. Steel Plates, Shapes, and Bars: ASTM A 36/A 36M.
8. Stainless Steel bars: ASTM A 276 or ASTM a 666, Type 304.

B. Corrugated Metal Ties: Metal strips not less than 7/8 inch (22 mm) wide with corrugations having a wavelength of 0.3 to 0.5 inch (7.6 to 12.7 mm) and an amplitude of 0.06 to 0.10 inch (1.5 to 2.5 mm) made from [**steel sheet, galvanized after fabrication**] [**stainless-steel sheet**] not less than [**0.043 inch (1.1 mm)**] [**0.053 inch (1.3 mm)**] [**0.067 inch (1.7 mm)**] [**0.097 inch (2.5 mm)**] thick.[**Ties made from galvanized steel sheet may be used in interior walls, unless otherwise indicated.**]

C. Wire Ties, General: Unless otherwise indicated, size wire ties to extend at least halfway through veneer but with at least 5/8-inch (16-mm) cover on outside face. Outer ends of wires are bent 90 degrees and extend 2 inches (50 mm) parallel to face of veneer.

D. Individual Wire Ties: Rectangular units with closed ends and not less than 4 inches (100 mm) wide.

1. Z-shaped ties with ends bent 90 degrees to provide hooks not less than 2 inches (50 mm) long may be used for masonry constructed from solid units or hollow units laid with cells horizontal.
2. Where wythes [**do not align**] [**are of different materials**], use adjustable ties with pintle-and-eye connections having a maximum adjustment of 1-1/4 inches (32 mm).
3. Wire: Fabricate from [**3/16-inch- (4.8-mm-)**] [**1/4-inch- (6.4-mm-)**] diameter, [**hot-dip galvanized steel**] [**stainless-steel**] wire.[**Mill-galvanized wire ties may be used in interior walls, unless otherwise indicated.**]

E. Adjustable Anchors for Connecting to Structure: Provide anchors that allow vertical or horizontal adjustment but resist tension and compression forces perpendicular to plane of wall.

1. Anchor Section for Welding to Steel Frame: Crimped 1/4-inch- (6.4-mm-) diameter, [**hot-dip galvanized steel**] [**stainless-steel**] wire.[**Mill-galvanized wire may be used at interior walls, unless otherwise indicated.**]
2. Tie Section[**for Steel Frame**]: Triangular-shaped wire tie, sized to extend within 1 inch (25 mm) of masonry face, made from [**0.188-inch- (4.8-mm-)**] [**0.25-inch- (6.4-mm-)**] diameter, [**hot-dip galvanized steel**] [**stainless-steel**] wire.[**Mill-galvanized wire may be used at interior walls, unless otherwise indicated.**]

3. Connector Section for Concrete: Dovetail tabs for inserting into dovetail slots in concrete and attached to tie section; formed from [**0.053-inch- (1.3-mm-) thick, steel sheet, galvanized after fabrication**] [**0.097-inch- (2.5-mm-) thick, steel sheet, galvanized after fabrication**] [**0.062-inch- (1.6-mm-) thick, stainless-steel sheet**] [**0.109-inch- (2.8-mm-) thick, stainless-steel sheet**]. [**0.064-inch- (1.6-mm-) thick, galvanized sheet may be used at interior walls, unless otherwise indicated.**] [**0.108-inch- (2.7-mm-) thick, galvanized sheet may be used at interior walls, unless otherwise indicated.**]
4. Tie Section for Concrete: Corrugated metal ties with dovetail tabs for inserting into dovetail slots in concrete and sized to extend to within 1 inch (25 mm) of masonry face.

F. Partition Top anchors: 0.097-inch- (2.5-mm-) thick metal plate with 3/8-inch- (10-mm-) diameter metal rod 6 inches (150 mm) long welded to plate and with closed-end plastic tube fitted over rod that allows rod to move in and out of tube. Fabricate from [**steel, hot-dip galvanized after fabrication**] [**stainless steel**].

G. Rigid Anchors: Fabricate from steel bars [**1-1/2 inches (38 mm) wide by 1/4 inch (6.4 mm) thick by 24 inches (600 mm) long, with ends turned up 2 inches (50 mm) or with cross pins, unless otherwise indicated**] [**bent to configuration indicated**].

1. Corrosion Protection: [**Hot-dip galvanized to comply with ASTM A 153/A 153M**] [**Epoxy coating 0.020 inch (0.51 mm) thick**] [**Rust-inhibitive paint**].

H. Stone Anchors: Fabricate dowels, cramps, and other stone anchors from stainless steel.

I. Adjustable Masonry-Veneer Anchors

1. General: Provide anchors that allow vertical adjustment but resist tension and compression forces perpendicular to plane of wall, for attachment over sheathing to wood or metal studs, and as follows:

a. Structural Performance Characteristics: Capable of withstanding a 100-lbf (445-N) load in both tension and compression without deforming or developing play in excess of 0.05 inch (1.3 mm).

2. Contractor's Option: Unless otherwise indicated, provide any of the following types of anchors:
3. Screw-Attached, Masonry-Veneer Anchors: Units consisting of a wire tie and a metal anchor section.

a. Anchor Section: Rib-stiffened, sheet metal plate with screw holes top and bottom, 2-3/4 inches (70 mm) wide by 3 inches (75 mm) high; with projecting tabs having slotted holes for inserting vertical legs of wire tie specially formed to fit anchor section.
b. Anchor Section: Sheet metal plate, 1-1/4 inches (32 mm) wide by [**6 inches (150 mm)**] [**9 inches (225 mm)**] long, with screw holes top and bottom and with raised rib-stiffened strap, 5/8 inch (16 mm) wide by [**3-5/8 inches (92 mm)**] [**5-1/2 inches (140 mm)**] long, stamped into center to provide a slot between strap and plate for inserting wire tie.
c. Anchor Section: Gasketed sheet metal plate, 1-1/4 inches (32 mm) wide by 6 inches (150 mm) long, with screw holes top and bottom; top and bottom ends bent to form pronged legs of length to match thickness of insulation or sheathing; and

raised rib-stiffened strap, 5/8 inch (16 mm) wide by 6 inches (150 mm) long, stamped into center to provide a slot between strap and plate for inserting wire tie. Provide anchor manufacturer's standard, self-adhering, modified bituminous gaskets manufactured to fit behind anchor plate and extend beyond pronged legs.

d. Anchor Section: Zinc-alloy barrel section with flanged head with eye and corrosion-resistant, self-drilling screw. Eye designed to receive wire tie and to serve as head for drilling fastener into framing. Barrel length to suit sheathing thickness, allowing screw to seat directly against framing with flanged head covering hole in sheathing.

e. Fabricate sheet metal anchor sections and other sheet metal parts from [**0.067-inch- (1.7-mm-) thick, steel sheet, galvanized after fabrication**] [**0.097-inch- (2.5-mm-) thick, steel sheet, galvanized after fabrication**] [**0.078-inch- (2.0-mm-) thick, stainless-steel sheet**] [**0.109-inch- (2.8-mm-) thick, stainless-steel sheet**].

f. Wire Ties: Triangular-, rectangular-, or T-shaped wire ties fabricated from [**0.188-inch- (4.8-mm-)**] [**0.25-inch- (6.4-mm-)**] diameter, [**hot-dip galvanized steel**] [**stainless-steel**] wire.

g. [**Available**]Products:

1) Dayton Superior Corporation, Dur-O-Wal Division; [**D/A 213**] [**or**] [**D/A 210 with D/A 700-708**].
2) Heckmann Building Products Inc.; [**315-D with 316**] [**or**] [**Pos-I-Tie**].
3) Hohmann & Barnard, Inc.; [**DW-10**] [**DW-10HS**] [**or**] [**DW-10-X**].
4) Wire-Bond; [**1004, Type III**] [**or**] [**RJ-711**].
5) <**Insert manufacturer's name; product name or designation.**>

4. Slip-in, Masonry-Veneer Anchors: Units consisting of a wire tie section and an anchor section designed to interlock with metal studs and be slipped into place as sheathing is installed.

a. Wire-Type Anchor: Bent wire anchor section with an eye to receive the wire tie. Wire tie has a vertical leg that slips into the eye of anchor section and allows vertical adjustment. Both sections are made from 3/16-inch (4.8-mm), hot-dip galvanized wire.

b. Strap-and-Wire Type Anchor: Flat metal strap with notch to interlock with flange of metal stud and two holes for inserting vertical legs of wire tie specially formed to fit anchor section. Strap is made from 0.067-inch- (1.7-mm-) thick, steel sheet, galvanized after fabrication; anchor wire tie is made from 3/16-inch (4.8-mm), hot-dip galvanized wire.

c. [**Available**]Products:

1) BLOK-LOK Limited; STUD-LOK.
2) Hohmann & Barnard, Inc.; AA308.
3) <**Insert manufacturer's name; product name or designation.**>

5. Seismic Masonry-Veneer Anchors: Units consisting of a metal anchor section and a connector section designed to engage a continuous wire embedded in the veneer mortar joint.

a. Anchor Section: Rib-stiffened, sheet metal plate with screw holes top and bottom, 2-3/4 inches (70 mm) wide by 3 inches (75 mm) high; with projecting tabs having slotted holes for inserting vertical leg of connector section.
b. Connector Section: Rib-stiffened, sheet metal bent plate with down-turned leg designed to fit in anchor section slot and with integral tabs designed to engage continuous wire. Size connector to extend at least halfway through veneer but with at least 5/8-inch (16-mm) cover on outside face.
c. Anchor Section: Rib-stiffened, sheet metal plate with screw holes top and bottom, 2-3/4 inches (70 mm) wide by 3 inches (75 mm) high; with projecting tabs having slotted holes for inserting vertical legs of wire tie specially formed to fit anchor section. Size wire tie to extend at least 1-1/2 inches (38 mm) into veneer but with at least 5/8-inch (16-mm) cover on outside face.
d. Connector Section: Sheet metal clip welded to wire tie with integral tabs designed to engage continuous wire.
e. Anchor Section: Gasketed sheet metal plate, 1-1/4 inches (32 mm) wide by 6 inches (150 mm) long, with screw holes top and bottom; top and bottom ends bent to form pronged legs to bridge insulation or sheathing and contact studs; and raised rib-stiffened strap, 5/8 inch (16 mm) wide by 6 inches (150 mm) long, stamped into center to provide a slot between strap and plate for inserting wire tie. Provide anchor manufacturer's standard, self-adhering, modified bituminous gaskets manufactured to fit behind anchor plate and extend beyond pronged legs.
f. Connector Section: Triangular wire tie and rigid PVC extrusion with snap-in grooves for inserting continuous wire. Size wire tie to extend at least halfway through veneer but with at least 5/8-inch (16-mm) cover on outside face.
g. Fabricate sheet metal anchor sections and other sheet metal parts from [**0.067-inch- (1.7-mm-) thick, steel sheet, galvanized after fabrication**] [**0.097-inch- (2.5-mm-) thick, steel sheet, galvanized after fabrication**] [**0.078-inch- (2.0-mm-) thick, stainless-steel sheet**] [**0.109-inch- (2.8-mm-) thick, stainless-steel sheet**].
h. Fabricate wire connector sections from [**0.188-inch- (4.8-mm-)**] [**0.25-inch- (6.4-mm-)**] diameter, [**hot-dip galvanized, carbon**] [**stainless**]-steel wire.
i. [**Available**]Products:

1) Dayton Superior Corporation, Dur-O-Wal Division; D/A 213S.
2) Hohmann & Barnard, Inc.; DW-10-X-Seismiclip.
3) Wire-Bond; RJ-711 with Wire-Bond clip.
4) <**Insert manufacturer's name; product name or designation.**>

6. Polymer-Coated, Steel Drill Screws for Steel Studs: ASTM C 954 except manufactured with hex washer head and neoprene washer, No. 10 (4.8-mm) diameter by length required to penetrate steel stud flange with not less than 3 exposed threads, and with organic polymer coating with salt-spray resistance to red rust of more than 800 hours per ASTM B 117.

a. [**Available**]Products:

1) ITW Buildex; Teks Maxiseal with Climaseal finish.
2) Textron Inc., Textron Fastening Systems; Elco Dril-Flex with Stalgard finish.
3) <**Insert manufacturer's name; product name or designation.**>

7. Stainless-Steel Drill Screws for Steel Studs: Proprietary fastener consisting of carbon-steel drill point and 300 Series stainless-steel shank, complying with ASTM C 954 except manufactured with hex washer head and neoprene washer, No. 10 (4.8-mm) diameter by length required to penetrate steel stud flange with not less than three exposed threads.

   a. [**Available**]Products:

      1) Dayton Superior Corporation, Dur-O-Wal Division; Stainless Steel SX Fastener.
      2) ITW Buildex; Scots long life Teks.
      3) <**Insert manufacturer's name; product name or designation.**>

2.12 MISCELLANEOUS ANCHORS

A. Unit Type Inserts in Concrete: Cast-iron or malleable-iron wedge-type inserts.

B. Dovetail Slots in Concrete: Furnish dovetail slots with filler strips, of slot size indicated, fabricated from 0.034-inch (0.9-mm), galvanized steel sheet.

C. Anchor Bolts: [**Headed**] [**or**] [**L-shaped**] steel bolts complying with ASTM A 307, Grade A (ASTM F 568M, Property Class 4.6); with ASTM A 563 (ASTM A 563M) hex nuts and, where indicated, flat washers; hot-dip galvanized to comply with ASTM A 153/A 153M, Class C; of dimensions indicated.

D. Postinstalled Anchors: Provide [**chemical**] [**or**] [**torque-controlled expansion**] anchors, with capability to sustain, without failure, a load equal to six times the load imposed when installed in solid or grouted unit masonry and equal to four times the load imposed when installed in concrete, as determined by testing per ASTM E 488 conducted by a qualified independent testing agency.

1. Corrosion Protection: Carbon-steel components zinc plated to comply with ASTM B 633, Class Fe/Zn 5 (5 microns) for Class SC 1 service condition (mild).
2. Corrosion Protection: Stainless-steel components complying with ASTM F 593 and ASTM F 594, Alloy Group 1 or 2 (ASTM F 738M and ASTM F 836M, Alloy Group 1 or 4) for bolts and nuts; ASTM A 666 or ASTM A 276, Type 304 or 316, for anchors.

2.13 EMBEDDED FLASHING MATERIALS

A. Metal Flashing: Provide metal flashing[**, where flashing is exposed or partly exposed and where indicated,**] complying with [**SMACNA's "Architectural Sheet Metal Manual**] [**Division 7 Section "Sheet Metal Flashing and Trim**]" and as follows:

1. Stainless Steel: ASTM A 240/A 240M, Type 304, 0.016 inch (0.4 mm) thick.
2. Copper: ASTM B 370, Temper H00 or H01, cold-rolled copper sheet, 10-oz./sq. ft. (3-kg/sq. m) weight or 0.0135 inch (0.34 mm) thick for fully concealed flashing; 16-oz./sq. ft. (5-kg/sq. m) weight or 0.0216 inch (0.55 mm) thick elsewhere.
3. Fabricate continuous flashings in sections 96 inches (2400 mm) long minimum, but not exceeding 12 feet (3.6 m). Provide splice plates at joints of formed, smooth metal flashing.

4. Fabricate through-wall metal flashing embedded in masonry from [**stainless steel**] [**copper**], with ribs at 3-inch (75-mm) intervals along length of flashing to provide an integral mortar bond.

    a. [**Available**]Products:

        1) Cheney Flashing Company; [**Cheney Flashing (Dovetail)**] [**or**] [**Cheney 3-Way Flashing (Sawtooth)**].
        2) Keystone Flashing Company, Inc.; Keystone 3-Way Interlocking Thruwall Flashing.
        3) <**Insert manufacturer's name; product name or designation.**>

5. Fabricate through-wall flashing with snaplock receiver on exterior face where indicated to receive counterflashing.
6. Fabricate through-wall flashing with drip edge [**where**] [**, unless otherwise**] indicated. Fabricate by extending flashing 1/2 inch (13 mm) out from wall, with outer edge bent down 30 degrees[**and hemmed**].
7. Fabricate through-wall flashing with sealant stop [**where**] [**, unless otherwise**] indicated. Fabricate by bending metal back on itself 3/4 inch (19 mm) at exterior face of wall and down into joint 3/8 inch (10 mm) to form a stop for retaining sealant backer rod.
8. Fabricate metal [**drip edges**] [**and**] [**sealant stops**] for ribbed metal flashing from plain metal flashing of same metal as ribbed flashing and extending at least 3 inches (75 mm) into wall with hemmed inner edge to receive ribbed flashing and form a hooked seam. Form hem on upper surface of metal so that completed seam will shed water.
9. Metal Drip Edges: Fabricate from stainless steel. Extend at least 3 inches (75 mm) into wall and 1/2 inch (13 mm) out from wall, with outer edge bent down 30 degrees[**and hemmed**].
10. Metal Flashing Terminations: Fabricate from stainless steel. Extend at least 3 inches (75 mm) into wall and out to exterior face of wall. At exterior face of wall, bend metal back on itself for 3/4 inch (19 mm) and down into joint 3/8 inch (10 mm) to form a stop for retaining sealant backer rod.
11. Metal Expansion-Joint Strips: Fabricate from [**stainless steel**] [**copper**] to shapes indicated.

B. Flexible Flashing: For flashing not exposed to the exterior, use[**one of**] the following, unless otherwise indicated:

1. Copper-Laminated Flashing: [**5-oz./sq. ft. (1.5-kg/sq. m)**] [**7-oz./sq. ft. (2-kg/sq. m)**] copper sheet bonded with asphalt between 2 layers of glass-fiber cloth. Use only where flashing is fully concealed in masonry.

    a. [**Available**]Products:

        1) Advanced Building Products Inc.; Copper Fabric Flashing.
        2) AFCO Products Inc.; Copper Fabric.
        3) Hohmann & Barnard, Inc.; H & B C-Fab Flashing.
        4) Phoenix Building Products; Type FCC-Fabric Covered Copper.
        5) Polytite Manufacturing Corp.; Copper Fabric Flashing.
        6) Sandell Manufacturing Co., Inc.; Copper Fabric Flashing.
        7) York Manufacturing, Inc.; York Copper Fabric Flashing.
        8) <**Insert manufacturer's name; product name or designation.**>

2. Asphalt-Coated Copper Flashing: [**5-oz./sq. ft. (1.5-kg/sq. m)**] [**7-oz./sq. ft. (2-kg/sq. m)**] copper sheet coated with flexible asphalt. Use only where flashing is fully concealed in masonry.

    a. [**Available**]Products:

        1) Advanced Building Products Inc.; Cop-R-Cote.
        2) AFCO Products Inc.; Cop-A-Cote.
        3) Hohmann & Barnard, Inc.; H & B C-Coat Flashing.
        4) Phoenix Building Products; Type ACC-Asphalt Bituminous Coated.
        5) Polytite Manufacturing Corp.; Coated Copper Flashing.
        6) Sandell Manufacturing Co., Inc.; Coated Copper Flashing.
        7) York Manufacturing, Inc.; Copperseal.
        8) <**Insert manufacturer's name; product name or designation.**>

3. Rubberized-Asphalt Flashing: Composite flashing product consisting of a pliable, adhesive rubberized-asphalt compound, bonded to a high-density, cross-laminated polyethylene film to produce an overall thickness of not less than [**0.030 inch (0.8 mm)**] [**0.040 inch (1.0 mm)**].

    a. [**Available**]Products:

        1) Advanced Building Products Inc.; Peel-N-Seal.
        2) Carlisle Coatings & Waterproofing; CCW-705-TWF Thru-Wall Flashing.
        3) Dayton Superior Corporation, Dur-O-Wal Division; Dur-O-Barrier-44.
        4) Grace Construction Products, a unit of W. R. Grace & Co. - Conn.; Perm-A-Barrier Wall Flashing.
        5) Heckmann Building Products Inc.; No. 82 Rubberized-Asphalt Thru-Wall Flashing.
        6) Hohmann & Barnard, Inc.; Textroflash.
        7) Polyguard Products, Inc.; Polyguard 300.
        8) Polytite Manufacturing Corp.; Poly-Barrier Self-Adhering Wall Flashing.
        9) Williams Products, Inc.; Everlastic MF-40.
        10) <**Insert manufacturer's name; product name or designation.**>

4. Elastomeric Thermoplastic Flashing: Composite flashing product consisting of a polyester-reinforced ethylene interpolymer alloy as follows:

    a. Monolithic Sheet: Elastomeric thermoplastic flashing, 0.040 inch (1.0 mm) thick.
    b. Self-Adhesive Sheet: Elastomeric thermoplastic flashing, 0.025 inch (0.6 mm) thick, with a 0.015-inch- (0.4-mm-) thick coating of rubberized-asphalt adhesive.
    c. Self-Adhesive Sheet with Drip Edge: Elastomeric thermoplastic flashing, 0.025 inch (0.6 mm) thick, with a 0.015-inch- (0.4-mm-) thick coating of rubberized-asphalt adhesive. Where flashing extends to face of masonry, rubberized-asphalt coating is held back approximately 1-1/2 inches (38 mm) from edge.

        1) Color: [**Gray**] [**White**] [**Tan/buff**] [**Black**].

    d. Accessories: Provide preformed corners, end dams, other special shapes, and seaming materials produced by flashing manufacturer.
    e. [**Available**]Products:

1) Hyload, Inc.; Hyload Cloaked Flashing System.
2) <**Insert manufacturer's name; product name or designation.**>

5. EPDM Flashing: Sheet flashing product made from ethylene-propylene-diene terpolymer, complying with ASTM D 4637, 0.040 inch (1.0 mm) thick.

a. [**Available**]Products:

1) Carlisle Coatings & Waterproofing; Pre-Kleened EPDM Thru-Wall Flashing.
2) Firestone Building Products; FlashGuard.
3) Heckmann Building Products Inc.; No. 81 EPDM Thru-Wall Flashing.
4) <**Insert manufacturer's name; product name or designation.**>

C. Single-Wythe CMU Flashing System: System of CMU cell flashing pans and interlocking CMU web covers made from high-density polyethylene incorporating chemical stabilizers that prevent UV degradation. Cell flashing pans have integral weep spouts that are designed to be built into mortar bed joints and weep collected moisture to the exterior of CMU walls and that extend into the cell to prevent clogging with mortar.

1. Product: Subject to compliance with requirements, provide "Blok-Flash" by Advanced Building Products Inc.

D. Solder and Sealants for Sheet Metal Flashings:[**As specified in Division 7 Section "Sheet Metal Flashing and Trim."**]

1. Solder for Stainless Steel: ASTM B 32, Grade Sn60, with acid flux of type recommended by stainless-steel sheet manufacturer.
2. Solder for Copper: ASTM B 32, Grade Sn50, 50 percent tin and 50 percent lead.
3. Elastomeric Sealant: ASTM C 920, chemically curing [**urethane**] [**polysulfide**] [**silicone**] sealant; of type, grade, class, and use classifications required to seal joints in sheet metal flashing and trim and remain watertight.

E. Adhesives, Primers, and Seam Tapes for Flashings: Flashing manufacturer's standard products or products recommended by flashing manufacturer for bonding flashing sheets to each other and to substrates.

2.14 MISCELLANEOUS MASONRY ACCESSORIES

A. Compressible Filler: Premolded filler strips complying with ASTM D 1056, Grade 2A1; compressible up to 35 percent; of width and thickness indicated; formulated from [**neoprene**] [**urethane**] [**or**] [**PVC**].

B. Preformed Control-Joint Gaskets: Made from [**styrene-butadiene-rubber compound, complying with ASTM D 2000, Designation M2AA-805**] [**or**] [**PVC, complying with ASTM D 2287, Type PVC-65406**] and designed to fit standard sash block and to maintain lateral stability in masonry wall; size and configuration as indicated.

C. Bond-Breaker Strips: Asphalt-saturated, organic roofing felt complying with ASTM D 226, Type I (No. 15 asphalt felt).

D. Weep/Vent Products: Use[**one of**] the following, unless otherwise indicated:

1. Wicking Material: Absorbent rope, made from [**cotton**] [**or**] [**UV-resistant synthetic fiber**], 1/4 to 3/8 inch (6 to 10 mm) in diameter, in length required to produce 2-inch (50-mm) exposure on exterior and 18 inches (450 mm) in cavity between wythes. Use only for weeps.
2. Round Plastic Weep/Vent Tubing: Medium-density polyethylene, 3/8-inch (9-mm) OD by 4 inches (100 mm) long.
3. Rectangular Plastic Weep/Vent Tubing: Clear butyrate, 3/8 by 1-1/2 by 3-1/2 inches (9 by 38 by 89 mm) long.
4. Cellular Plastic Weep/Vent: One-piece, flexible extrusion made from UV-resistant polypropylene copolymer, full height and width of head joint and depth 1/8 inch (3 mm) less than depth of outer wythe, in color selected from manufacturer's standard.

    a. [**Available**]Products:

        1) Advanced Building Products Inc.; Mortar Maze weep vent.
        2) Dayton Superior Corporation, Dur-O-Wal Division; Cell Vents.
        3) Heckmann Building Products Inc.; No. 85 Cell Vent.
        4) Hohmann & Barnard, Inc.; Quadro-Vent.
        5) Wire-Bond; Cell Vent.
        6) <**Insert manufacturer's name; product name or designation.**>

5. Mesh Weep/Vent: Free-draining mesh; made from polyethylene strands, full height and width of head joint and depth 1/8 inch (3 mm) less than depth of outer wythe; in color selected from manufacturer's standard.

    a. [**Available**]Products:

        1) Mortar Net USA, Ltd.; Mortar Net Weep Vents.
        2) <**Insert manufacturer's name; product name or designation.**>

6. Aluminum Weep Hole/Vent: One-piece, L-shaped units made from sheet aluminum, designed to fit into a head joint and consisting of a vertical channel with louvers stamped in web and with a top flap to keep mortar out of the head joint; painted before installation to comply with Division 9 painting Sections in color approved by Architect to match that of mortar.

    a. [**Available**]Products:

        1) Hohmann & Barnard, Inc.; #343W - Wilko Weep Hole.
        2) <**Insert manufacturer's name; product name or designation.**>

7. Vinyl Weep Hole/Vent: One-piece, offset, T-shaped units made from flexible, injection-molded PVC, designed to fit into a head joint and consisting of a louvered vertical leg, flexible wings to seal against ends of masonry units, and a top flap to keep mortar out of the head joint; in color approved by Architect to match that of mortar.

    a. [**Available**]Products:

        1) Hohmann & Barnard, Inc.; #343 Louvered Weep Hole.

2) Williams Products, Inc.; Williams-Goodco Brick Vent.
3) Wire-Bond; Louvered Weepholes.
4) <**Insert manufacturer's name; product name or designation.**>

E. Cavity Drainage Material: Free-draining mesh, made from polymer strands that will not degrade within the wall cavity.

1. Provide one of the following configurations:

a. Strips, full-depth of cavity and 10 inches (250 mm) wide, with dovetail shaped notches 7 inches (175 mm) deep that prevent mesh from being clogged with mortar droppings.
b. Strips, not less than [**3/4 inch (19 mm)**] [**1-1/2 inches (38 mm)**] thick and 10 inches (250 mm) wide, with dimpled surface designed to catch mortar droppings and prevent weep holes from being clogged with mortar.
c. Sheets or strips full depth of cavity and installed to full height of cavity.
d. Sheets or strips not less than [**3/4 inch (19 mm)**] [**1 inch (25 mm)**] <**Insert thickness**> thick and installed to full height of cavity with additional strips 4 inches (100 mm) high at weep holes and thick enough to fill entire depth of cavity and prevent weep holes from being clogged with mortar.

2. [**Available**]Products:

a. Advanced Building Products Inc.; [**Mortar Break**] [**Mortar Break II**].
b. Archovations, Inc.; CavClear Masonry Mat.
c. Dayton Superior Corporation, Dur-O-Wal Division; Polytite MortarStop.
d. Mortar Net USA, Ltd.; Mortar Net.
e. <**Insert manufacturer's name; product name or designation.**>

F. Reinforcing Bar Positioners: Wire units designed to fit into mortar bed joints spanning masonry unit cells with loops for holding reinforcing bars in center of cells. Units are formed from 0.142-inch (3.6-mm) steel wire, hot-dip galvanized after fabrication. Provide units with either two loops or four loops as needed for number of bars indicated.

1. [**Available**]Products:

a. Dayton Superior Corporation, Dur-O-Wal Division; D/A 810, D/A 812 or D/A 817.
b. Heckmann Building Products Inc.; No. 376 Rebar Positioner.
c. Hohmann & Barnard, Inc.; #RB or #RB-Twin Rebar Positioner.
d. Wire-Bond; O-Ring or Double O-Ring Rebar Positioner.
e. <**Insert manufacturer's name; product name or designation.**>

2.15 MASONRY-CELL INSULATION

A. Loose-Granular Fill Insulation: Perlite complying with ASTM C 549, Type II (surface treated for water repellency and limited moisture absorption) or Type IV (surface treated for water repellency and to limit dust generation).

B. Molded-Polystyrene Insulation Units: Rigid, cellular thermal insulation formed by the expansion of polystyrene-resin beads or granules in a closed mold to comply with ASTM C 578, Type I. Provide specially shaped units designed for installing in cores of masonry units.

1. [**Available**]Products:

a. Concrete Block Insulating Systems; Korfil.
b. Shelter Enterprises Inc.; Omni Core.
c. <**Insert manufacturer's name; product name or designation.**>

2.16 CAVITY-WALL INSULATION

A. Extruded-Polystyrene Board Insulation: ASTM C 578, Type [**IV**] [**X**], closed-cell product extruded with an integral skin.

B. Extruded-Polystyrene Board Insulation with Increased R-Value: ASTM C 578, Type IV, but with an aged thermal resistance (R-value) for 1-inch (25-mm) thickness of 5.6 deg F x h x sq. ft./Btu at 75 deg F (1.0 K x sq. m/W at 24 deg C) at 5 years; closed-cell product with a carbon-black filler and extruded with an integral skin.

C. Molded-Polystyrene Board Insulation: ASTM C 578, Type I.

D. Polyisocyanurate Board Insulation: ASTM C 1289, Type I (aluminum-foil-faced), Class 2 (glass-fiber-reinforced).

E. Adhesive: Type recommended by insulation board manufacturer for application indicated.

2.17 MASONRY CLEANERS

A. Proprietary Acidic Cleaner: Manufacturer's standard-strength cleaner designed for removing mortar/grout stains, efflorescence, and other new construction stains from new masonry without discoloring or damaging masonry surfaces. Use product expressly approved for intended use by cleaner manufacturer and manufacturer of masonry units being cleaned.

1. [**Available**]Manufacturers:

a. Diedrich Technologies, Inc.
b. EaCo Chem, Inc.
c. ProSoCo, Inc.
d. <**Insert manufacturer's name.**>

2.18 MORTAR AND GROUT MIXES

A. General: Do not use admixtures, including pigments, air-entraining agents, accelerators, retarders, water-repellent agents, antifreeze compounds, or other admixtures, unless otherwise indicated.

1. Do not use calcium chloride in mortar or grout.

2. Limit cementitious materials in mortar to portland cement[**, mortar cement,**] and lime.
3. Limit cementitious materials in mortar for exterior[**and reinforced**] masonry to portland cement[**, mortar cement,**] and lime.
4. Add cold-weather admixture (if used) at same rate for all mortar that will be exposed to view, regardless of weather conditions, to ensure that mortar color is consistent.

B. Preblended, Dry Mortar Mix: Furnish dry mortar ingredients in form of a preblended mix. Measure quantities by weight to ensure accurate proportions, and thoroughly blend ingredients before delivering to Project site.

C. Mortar for Unit Masonry: Comply with [**ASTM C 270**] [**BIA Technical Notes 8A**] [**UBC Standard 21-15**], Proportion Specification. Provide the following types of mortar for applications stated unless another type is indicated[**or needed to provide required compressive strength of masonry**].

D. Mortar for Unit Masonry: Comply with [**ASTM C 270**] [**BIA Technical Notes 8A**] [**UBC Standard 21-15**], Property Specification. Provide the following types of mortar for applications stated unless another type is indicated[**or needed to provide required compressive strength of masonry**].

1. For masonry below grade or in contact with earth, use Type [**M**] [**S**].
2. For reinforced masonry, use Type [**S**] [**N**].
3. For mortar parge coats, use Type [**S**] [**or**] [**N**].
4. For exterior, above-grade, load-bearing and non-load-bearing walls and parapet walls; for interior load-bearing walls; for interior non-load-bearing partitions; and for other applications where another type is not indicated, use Type N.
5. For interior non-load-bearing partitions, Type O may be used instead of Type N.

E. Pigmented Mortar: Use colored cement product[**or select and proportion pigments with other ingredients to produce color required. Do not add pigments to colored cement products**].

1. Pigments shall not exceed 10 percent of portland cement by weight.
2. Pigments shall not exceed 5 percent of [**masonry cement**] [**or**] [**mortar cement**] by weight.
3. Mix to match Architect's sample.

F. Colored-Aggregate Mortar: Produce required mortar color by using colored aggregates and natural color or white cement as necessary to produce required mortar color.

1. Mix to match Architect's sample.

G. Grout for Unit Masonry: Comply with [**ASTM C 476**] [**UBC Standard 21-19**].

1. Use grout of type indicated or, if not otherwise indicated, of type (fine or coarse) that will comply with [**Table 1.15.1 in ACI 530.1/ASCE 6/TMS 602**] [**Table 21-C in the Uniform Building Code**] for dimensions of grout spaces and pour height.
2. Provide grout with a slump of 8 to 11 inches (200 to 280 mm) as measured according to ASTM C 143/C 143M.

H. Epoxy Pointing Mortar: Mix epoxy pointing mortar to comply with mortar manufacturer's written instructions.

2.19 SOURCE QUALITY CONTROL

A. Owner will engage a qualified independent testing agency to perform source quality-control testing indicated below:

1. Payment for these services will be made [**by Owner**] [**from Testing and Inspecting Allowance, as authorized by Change Orders**].
2. Retesting of materials failing to comply with specified requirements shall be done at Contractor's expense.

B. Clay Masonry Unit Test: For each type of unit furnished, per ASTM C 67.

C. Concrete Masonry Unit Test: For each type of unit furnished, per ASTM C 140.

PART 3 - EXECUTION

3.1 EXAMINATION

A. Examine conditions, with Installer present, for compliance with requirements for installation tolerances and other conditions affecting performance of work.

1. For the record, prepare written report, endorsed by Installer, listing conditions detrimental to performance of work.
2. Verify that foundations are within tolerances specified.
3. Verify that reinforcing dowels are properly placed.

B. Before installation, examine rough-in and built-in construction for piping systems to verify actual locations of piping connections.

C. Proceed with installation only after unsatisfactory conditions have been corrected.

3.2 INSTALLATION, GENERAL

A. Thickness: Build cavity and composite walls and other masonry construction to full thickness shown. Build single-wythe walls to actual widths of masonry units, using units of widths indicated.

B. Build chases and recesses to accommodate items specified in this and other Sections.

C. Leave openings for equipment to be installed before completing masonry. After installing equipment, complete masonry to match the construction immediately adjacent to opening.

D. Use full-size units without cutting if possible. If cutting is required to provide a continuous pattern or to fit adjoining construction, cut units with motor-driven saws; provide clean, sharp,

unchipped edges. Allow units to dry before laying unless wetting of units is specified. Install cut units with cut surfaces and, where possible, cut edges concealed.

E. Select and arrange units for exposed unit masonry to produce a uniform blend of colors and textures.

1. Mix units from several pallets or cubes as they are placed.

F. Matching Existing Masonry: Match coursing, bonding, color, and texture of existing masonry.

G. Wetting of Brick: Wet brick before laying if initial rate of absorption exceeds 30 g/30 sq. in. (30 g/194 sq. cm) per minute when tested per ASTM C 67. Allow units to absorb water so they are damp but not wet at time of laying.

H. Comply with construction tolerances in ACI 530.1/ASCE 6/TMS 602 and with the following:

1. For conspicuous vertical lines, such as external corners, door jambs, reveals, and expansion and control joints, do not vary from plumb by more than 1/8 inch in 10 feet (3 mm in 3 m), 1/4 inch in 20 feet (6 mm in 6 m), or 1/2 inch (12 mm) maximum.
2. For vertical alignment of exposed head joints, do not vary from plumb by more than 1/4 inch in 10 feet (6 mm in 3 m), or 1/2 inch (12 mm) maximum.
3. For conspicuous horizontal lines, such as lintels, sills, parapets, and reveals, do not vary from level by more than 1/8 inch in 10 feet (3 mm in 3 m), 1/4 inch in 20 feet (6 mm in 6 m), or 1/2 inch (12 mm) maximum.
4. For exposed bed joints, do not vary from thickness indicated by more than plus or minus 1/8 inch (3 mm), with a maximum thickness limited to 1/2 inch (12 mm). Do not vary from bed-joint thickness of adjacent courses by more than 1/8 inch (3 mm).
5. For exposed head joints, do not vary from thickness indicated by more than plus or minus 1/8 inch (3 mm). Do not vary from adjacent bed-joint and head-joint thicknesses by more than 1/8 inch (3 mm).
6. For faces of adjacent exposed masonry units, do not vary from flush alignment by more than 1/16 inch (1.5 mm) except due to warpage of masonry units within tolerances specified for warpage of units.
7. For exposed bed joints and head joints of stacked bond, do not vary from a straight line by more than 1/16 inch (1.5 mm) from one masonry unit to the next.

3.3 LAYING MASONRY WALLS

A. Lay out walls in advance for accurate spacing of surface bond patterns with uniform joint thicknesses and for accurate location of openings, movement-type joints, returns, and offsets. Avoid using less-than-half-size units, particularly at corners, jambs, and, where possible, at other locations.

B. Bond Pattern for Exposed Masonry: Unless otherwise indicated, lay exposed masonry in [**running bond**] [**stack bond**] [**one-third running bond**] [**Flemish bond**] [**English bond**] [**bond pattern indicated on Drawings**]; do not use units with less than nominal 4-inch (100-mm) horizontal face dimensions at corners or jambs.

C. Lay concealed masonry with all units in a wythe in running bond or bonded by lapping not less than [**2 inches (50 mm)**] [**4-inches (100-mm)**]. Bond and interlock each course of each wythe

at corners. Do not use units with less than nominal 4-inch (100-mm) horizontal face dimensions at corners or jambs.

D. Stopping and Resuming Work: Stop work by racking back units in each course from those in course below; do not tooth. When resuming work, clean masonry surfaces that are to receive mortar, remove loose masonry units and mortar, and wet brick if required before laying fresh masonry.

E. Built-in Work: As construction progresses, build in items specified in this and other Sections. Fill in solidly with masonry around built-in items.

F. Fill space between steel frames and masonry solidly with mortar, unless otherwise indicated.

G. Where built-in items are to be embedded in cores of hollow masonry units, place a layer of metal lath, wire mesh, or plastic mesh in the joint below and rod mortar or grout into core.

H. Fill cores in hollow concrete masonry units with grout 24 inches (600 mm) under bearing plates, beams, lintels, posts, and similar items, unless otherwise indicated.

I. Build non-load-bearing interior partitions full height of story to underside of solid floor or roof structure above, unless otherwise indicated.

1. Install compressible filler in joint between top of partition and underside of structure above.
2. Fasten partition top anchors to structure above and build into top of partition. Grout cells of CMUs solidly around plastic tubes of anchors and push tubes down into grout to provide 1/2-inch (13-mm) clearance between end of anchor rod and end of tube. Space anchors [**48 inches (1200 mm)**] <**Insert spacing**> o.c., unless otherwise indicated.
3. Wedge non-load-bearing partitions against structure above with small pieces of tile, slate, or metal. Fill joint with mortar after dead-load deflection of structure above approaches final position.
4. At fire-rated partitions, treat joint between top of partition and underside of structure above to comply with Division 7 Section "Fire-Resistive Joint Systems."

3.4 MORTAR BEDDING AND JOINTING

A. Lay hollow [**brick**] [**and**] [**concrete masonry units**] as follows:

1. With face shells fully bedded in mortar and with head joints of depth equal to bed joints.
2. With webs fully bedded in mortar in all courses of piers, columns, and pilasters.
3. With webs fully bedded in mortar in grouted masonry, including starting course on footings.
4. With entire units, including areas under cells, fully bedded in mortar at starting course on footings where cells are not grouted.

B. Lay solid masonry units with completely filled bed and head joints; butter ends with sufficient mortar to fill head joints and shove into place. Do not deeply furrow bed joints or slush head joints.

C. Lay structural-clay tile as follows:

1. Lay vertical-cell units with full head joints, unless otherwise indicated. Provide bed joints with full mortar coverage on face shells and webs.
2. Lay horizontal-cell units with full bed joints, unless otherwise indicated. Keep drainage channels, if any, free of mortar. Form head joints with sufficient mortar so excess will be squeezed out as units are placed in position. Butter both sides of units to be placed, or butter one side of unit already in place and one side of unit to be placed.
3. Maintain joint thicknesses indicated except for minor variations required to maintain bond alignment. If not indicated, lay walls with 1/4- to 3/8-inch- (6- to 10-mm-) thick joints.
4. Where epoxy-mortar pointed joints are indicated, rake out setting mortar to a uniform depth of 1/4 inch (6 mm) and point with epoxy mortar to comply with epoxy-mortar manufacturer's written instructions.

D. Set firebox brick in full bed of refractory mortar with full head joints. Form joints by buttering both surfaces of adjoining brick and sliding it into place. Make joints just wide enough to accommodate variations in size of brick, approximately 1/8 inch (3 mm). Tool joints smooth on surfaces exposed to fire or smoke.

E. Install clay flue liners to comply with ASTM C 1283. Install flue liners ahead of surrounding masonry. Set clay flue liners in full bed of refractory mortar 1/16 to 1/8 inch (1.6 to 3 mm) thick. Strike joints flush on inside of flue to provide smooth surface. Maintain expansion space between flue liner and surrounding masonry except where surrounding masonry is required to provide lateral support for flue liners.

F. Set [**stone**] [**cast-stone**] trim units in full bed of mortar with full vertical joints. Fill dowel, anchor, and similar holes.

1. Clean soiled surfaces with fiber brush and soap powder and rinse thoroughly with clear water.
2. Allow cleaned surfaces to dry before setting.
3. Wet joint surfaces thoroughly before applying mortar.

G. Tool exposed joints slightly concave when thumbprint hard, using a jointer larger than joint thickness, unless otherwise indicated.

1. For glazed masonry units, use a nonmetallic jointer 3/4 inch (19 mm) or more in width.

H. Cut joints flush for masonry walls to receive plaster or other direct-applied finishes (other than paint), unless otherwise indicated.

3.5 COMPOSITE MASONRY

A. Bond wythes of composite masonry together using one of the following methods:

1. Individual Metal Ties: Provide ties as shown installed in horizontal joints, but not less than one metal tie for [**4.5 sq. ft. (0.42 sq. m)**] [**2.67 sq. ft. (0.25 sq. m)**] [**1.77 sq. ft. (0.16 sq. m)**] of wall area spaced not to exceed [**36 inches (914 mm)**] [**24 inches (610 mm)**] [**16 inches (406 mm)**] o.c. horizontally and 16 inches (406 mm) o.c. vertically. Stagger ties in alternate courses. Provide additional ties within 12 inches (305 mm) of openings and space not more than 36 inches (915 mm) apart around perimeter of

openings. At intersecting and abutting walls, provide ties at no more than 24 inches (610 mm) o.c. vertically.

a. Where bed joints of wythes do not align, use adjustable (two-piece) type ties.

2. Masonry Joint Reinforcement: Installed in horizontal mortar joints.

a. Where bed joints of both wythes align, use [**ladder-type reinforcement extending across both wythes**] [**tab-type reinforcement**].
b. Where bed joints of wythes do not align, use adjustable (two-piece) type reinforcement[**with continuous horizontal wire in facing wythe attached to ties**].

3. Header Bonding: Provide masonry unit headers extending not less than 3 inches (76 mm) into each wythe. Space headers not over [**8 inches (203 mm)**] [**12 inches (305 mm)**] clear horizontally and 16 inches (406 mm) clear vertically.

B. Bond wythes of composite masonry together using bonding system indicated on Drawings.

C. Collar Joints: Solidly fill collar joints by parging face of first wythe that is laid and shoving units of other wythe into place.

D. Collar Joints in Clay Tile Masonry: After each course is laid, fill the vertical, longitudinal joint between wythes solidly with mortar at [**exterior walls, except cavity walls**] [**, and**] [**interior walls and partitions**].

E. Corners: Provide interlocking masonry unit bond in each wythe and course at corners, unless otherwise indicated.

1. Provide continuity with masonry joint reinforcement at corners by using prefabricated L-shaped units as well as masonry bonding.

F. Intersecting and Abutting Walls: Unless vertical expansion or control joints are shown at juncture, bond walls together as follows:

1. Provide individual metal ties not more than [**8 inches (203 mm)**] [**16 inches (406 mm)**] o.c.
2. Provide continuity with masonry joint reinforcement by using prefabricated T-shaped units.
3. Provide rigid metal anchors not more than [**24 inches (610 mm)**] [**48 inches (1220 mm)**] o.c. If used with hollow masonry units, embed ends in mortar-filled cores.

3.6 CAVITY WALLS

A. Bond wythes of cavity walls together using one of the following methods:

1. Individual Metal Ties: Provide ties as shown installed in horizontal joints, but not less than one metal tie for [**4.5 sq. ft. (0.42 sq. m)**] [**2.67 sq. ft. (0.25 sq. m)**] [**1.77 sq. ft. (0.16 sq. m)**] of wall area spaced not to exceed [**36 inches (914 mm)**] [**24 inches (610 mm)**] [**16 inches (406 mm)**] o.c. horizontally and 16 inches (406 mm) o.c.

vertically. Stagger ties in alternate courses. Provide additional ties within 12 inches (305 mm) of openings and space not more than 36 inches (915 mm) apart around perimeter of openings. At intersecting and abutting walls, provide ties at no more than 24 inches (610 mm) o.c. vertically.

a. Where bed joints of wythes do not align, use adjustable (two-piece) type ties.
b. Where one wythe is of clay masonry and the other of concrete masonry, use adjustable (two-piece) type ties to allow for differential movement regardless of whether bed joints align.

2. Masonry Joint Reinforcement: Installed in horizontal mortar joints.

a. Where bed joints of both wythes align, use [**ladder-type reinforcement extending across both wythes**] [**tab-type reinforcement**].
b. Where bed joints of wythes do not align, use adjustable (two-piece) type reinforcement[**with continuous horizontal wire in facing wythe attached to ties**].
c. Where one wythe is of clay masonry and the other of concrete masonry, use adjustable (two-piece) type reinforcement[**with continuous horizontal wire in facing wythe attached to ties**] to allow for differential movement regardless of whether bed joints align.

3. Header Bonding: Provide masonry unit headers extending not less than 3 inches (76 mm) into each wythe. Space headers not over [**8 inches (203 mm)**] [**12 inches (305 mm)**] clear horizontally and 16 inches (406 mm) clear vertically.
4. Masonry Veneer Anchors: Comply with requirements for anchoring masonry veneers.

B. Bond wythes of cavity walls together using bonding system indicated on Drawings.

C. Keep cavities clean of mortar droppings and other materials during construction. Bevel beds away from cavity, to minimize mortar protrusions into cavity. Do not attempt to trowel or remove mortar fins protruding into cavity.

D. Parge cavity face of backup wythe in a single coat approximately 3/8 inch (10 mm) thick. Trowel face of parge coat smooth.

E. Coat cavity face of backup wythe to comply with Division 7 Section "Bituminous Dampproofing."

F. Installing Cavity-Wall Insulation: Place small dabs of adhesive, spaced approximately 12 inches (300 mm) o.c. both ways, on inside face of insulation boards, or attach with plastic fasteners designed for this purpose. Fit courses of insulation between wall ties and other confining obstructions in cavity, with edges butted tightly both ways. Press units firmly against inside wythe of masonry or other construction as shown.

1. Fill cracks and open gaps in insulation with crack sealer compatible with insulation and masonry.

3.7 MASONRY-CELL INSULATION

A. Pour granular insulation into cavities to fill void spaces. Maintain inspection ports to show presence of insulation at extremities of each pour area. Close the ports after filling has been confirmed. Limit the fall of insulation to 1 story in height, but not more than 20 feet (6 m).

B. Install molded-polystyrene insulation units into masonry unit cells before laying units.

3.8 MASONRY JOINT REINFORCEMENT

A. General: Install entire length of longitudinal side rods in mortar with a minimum cover of 5/8 inch (16 mm) on exterior side of walls, 1/2 inch (13 mm) elsewhere. Lap reinforcement a minimum of 6 inches (150 mm).

1. Space reinforcement not more than 16 inches (406 mm) o.c.
2. Space reinforcement not more than 8 inches (203 mm) o.c. in foundation walls and parapet walls.
3. Provide reinforcement not more than 8 inches (203 mm) above and below wall openings and extending 12 inches (305 mm) beyond openings.

    a. Reinforcement above is in addition to continuous reinforcement.

B. Interrupt joint reinforcement at control and expansion joints, unless otherwise indicated.

C. Provide continuity at wall intersections by using prefabricated T-shaped units.

D. Provide continuity at corners by using prefabricated L-shaped units.

E. Cut and bend reinforcing units as directed by manufacturer for continuity at[**corners,**] returns, offsets, column fireproofing, pipe enclosures, and other special conditions.

3.9 ANCHORING MASONRY TO STRUCTURAL MEMBERS

A. Anchor masonry to structural members where masonry abuts or faces structural members to comply with the following:

1. Provide an open space not less than [**1/2 inch (13 mm)**] [**1 inch (25 mm)**] in width between masonry and structural member, unless otherwise indicated. Keep open space free of mortar and other rigid materials.
2. Anchor masonry to structural members with anchors embedded in masonry joints and attached to structure.
3. Space anchors as indicated, but not more than 24 inches (610 mm) o.c. vertically and 36 inches (915 mm) o.c. horizontally.

3.10 ANCHORING MASONRY VENEERS

A. Anchor masonry veneers to [**wall framing**] [**concrete and masonry backup**] with[**seismic**] masonry-veneer anchors to comply with the following requirements:

1. Fasten [**screw-attached**] [**and**] [**seismic**] anchors [**through sheathing to wall framing**] [**and**] [**to concrete and masonry backup**] with metal fasteners of type indicated. Use two fasteners unless anchor design only uses one fastener.
2. Insert slip-in anchors in metal studs as sheathing is installed. Provide one anchor at each stud in each horizontal joint between sheathing boards.
3. Embed [**tie sections**] [**connector sections and continuous wire**] in masonry joints. Provide not less than 2 inches (50 mm) of air space between back of masonry veneer and face of sheathing.
4. Locate anchor sections to allow maximum vertical differential movement of ties up and down.
5. Space anchors as indicated, but not more than 18 inches (458 mm) o.c. vertically and 24 inches (610 mm) o.c. horizontally, with not less than 1 anchor for each 2 sq. ft. (0.2 sq. m) of wall area. Install additional anchors within 12 inches (305 mm) of openings and at intervals, not exceeding 8 inches (203 mm), around perimeter.
6. Space anchors as indicated, but not more than 16 inches (406 mm) o.c. vertically and [**32 inches (813 mm)**] [**24 inches (610 mm)**] o.c. horizontally with not less than 1 anchor for each [**3.5 sq. ft. (0.33 sq. m)**] [**2.67 sq. ft. (0.25 sq. m)**] of wall area. Install additional anchors within 12 inches (305 mm) of openings and at intervals, not exceeding 36 inches (914 mm), around perimeter.

3.11 CONTROL AND EXPANSION JOINTS

A. General: Install control and expansion joint materials in unit masonry as masonry progresses. Do not allow materials to span control and expansion joints without provision to allow for in-plane wall or partition movement.

B. Form control joints in concrete masonry [**as follows**] [**using one of the following methods**]:

1. Fit bond-breaker strips into hollow contour in ends of concrete masonry units on one side of control joint. Fill resultant core with grout and rake out joints in exposed faces for application of sealant.
2. Install preformed control-joint gaskets designed to fit standard sash block.
3. Install interlocking units designed for control joints. Install bond-breaker strips at joint. Keep head joints free and clear of mortar or rake out joint for application of sealant.
4. Install temporary foam-plastic filler in head joints and remove filler when unit masonry is complete for application of sealant.

C. Form expansion joints in brick made from clay or shale as follows:

1. Build flanges of metal expansion strips into masonry. Lap each joint 4 inches (100 mm) in direction of water flow. Seal joints below grade and at junctures with horizontal expansion joints if any.
2. Build flanges of factory-fabricated, expansion-joint units into masonry.
3. Build in compressible joint fillers where indicated.
4. Form open joint full depth of brick wythe and of width indicated, but not less than [**3/8 inch (10 mm)**] [**1/2 inch (13 mm)**] <**Insert minimum width**> for installation of sealant and backer rod specified in Division 7 Section "Joint Sealants."

D. Provide horizontal, pressure-relieving joints by either leaving an air space or inserting a compressible filler of width required for installing sealant and backer rod specified in Division 7 Section "Joint Sealants," but not less than [**3/8 inch (10 mm)**] <**Insert minimum width**>.

1. Locate horizontal, pressure-relieving joints beneath shelf angles supporting masonry.

3.12 LINTELS

A. Install steel lintels where indicated.

B. Provide [**concrete**] [**or**] [**masonry**] lintels where shown and where openings of more than 12 inches (305 mm) for brick-size units and 24 inches (610 mm) for block-size units are shown without structural steel or other supporting lintels.

C. Provide minimum bearing of 8 inches (200 mm) at each jamb, unless otherwise indicated.

3.13 FLASHING, WEEP HOLES, CAVITY DRAINAGE, AND VENTS

A. General: Install embedded flashing and weep holes in masonry at shelf angles, lintels, ledges, other obstructions to downward flow of water in wall, and where indicated.[**Install vents at shelf angles, ledges, and other obstructions to upward flow of air in cavities, and where indicated.**]

B. Install flashing as follows, unless otherwise indicated:

1. Prepare masonry surfaces so they are smooth and free from projections that could puncture flashing. Where flashing is within mortar joint, place through-wall flashing on sloping bed of mortar and cover with mortar. Before covering with mortar, seal penetrations in flashing with adhesive, sealant, or tape as recommended by flashing manufacturer.
2. At multiwythe masonry walls, including cavity walls, extend flashing through outer wythe, turned up a minimum of [**4 inches (100 mm)**] [**8 inches (200 mm)**], and through inner wythe to within 1/2 inch (13 mm) of the interior face of wall in exposed masonry. Where interior face of wall is to receive furring or framing, carry flashing completely through inner wythe and turn flashing up approximately 2 inches (50 mm) on interior face.
3. At multiwythe masonry walls, including cavity walls, extend flashing through outer wythe, turned up a minimum of [**4 inches (100 mm)**] [**8 inches (200 mm)**], and 1-1/2 inches (38 mm) into the inner wythe.[**Form 1/4-inch (6-mm) hook in edge of flashing embedded in inner wythe.**]
4. At masonry-veneer walls, extend flashing through veneer, across air space behind veneer, and up face of sheathing at least 8 inches (200 mm); with upper edge tucked under building paper or building wrap, lapping at least 4 inches (100 mm).
5. At lintels and shelf angles, extend flashing a minimum of 6 inches (150 mm) into masonry at each end. At heads and sills, extend flashing 6 inches (150 mm) at ends and turn up not less than 2 inches (50 mm) to form end dams.
6. Interlock end joints of ribbed sheet metal flashing by overlapping ribs not less than 1-1/2 inches (38 mm) or as recommended by flashing manufacturer, and seal lap with

elastomeric sealant complying with requirements in Division 7 Section "Joint Sealants" for application indicated.

7. Install metal [**drip edges**] [**and**] [**sealant stops**] with ribbed sheet metal flashing by interlocking hemmed edges to form hooked seam. Seal seam with elastomeric sealant complying with requirements in Division 7 Section "Joint Sealants" for application indicated.
8. Install metal drip edges beneath flexible flashing at exterior face of wall. Stop flexible flashing 1/2 inch (13 mm) back from outside face of wall and adhere flexible flashing to top of metal drip edge.
9. Install metal flashing termination beneath flexible flashing at exterior face of wall. Stop flexible flashing 1/2 inch (13 mm) back from outside face of wall and adhere flexible flashing to top of metal flashing termination.
10. Cut flexible flashing off flush with face of wall after masonry wall construction is completed.

C. Install single-wythe CMU flashing system in bed joints of CMU walls where indicated to comply with manufacturer's written instructions. Install CMU cell pans with upturned edges located below face shells and webs of CMUs above and with weep spouts aligned with face of wall. Install CMU web covers so that they cover upturned edges of CMU cell pans at CMU webs and extend from face shell to face shell.

D. Install reglets and nailers for flashing and other related construction where they are shown to be built into masonry.

E. Install weep holes in head joints in exterior wythes of first course of masonry immediately above embedded flashing and as follows:

1. Use [**specified weep/vent products**] [**or**] [**open head joints**] to form weep holes.
2. Use wicking material to form weep holes above flashing under brick sills. Turn wicking down at lip of sill to be as inconspicuous as possible.
3. Space weep holes 24 inches (600 mm) o.c., unless otherwise indicated.
4. Space weep holes formed from [**plastic tubing**] [**or**] [**wicking material**] 16 inches (400 mm) o.c.
5. Cover cavity side of weep holes with plastic insect screening at cavities insulated with loose-fill insulation.
6. Trim wicking material flush with outside face of wall after mortar has set.

F. Place pea gravel in cavities as soon as practical to a height equal to height of first course above top of flashing, but not less than 2 inches (50 mm), to maintain drainage.

1. Fill cavities full height by placing pea gravel in cavities as masonry is laid so that at any point masonry does not extend more than 24 inches (600 mm) above top of pea gravel.

G. Place cavity drainage material in cavities to comply with configuration requirements for cavity drainage material in Part 2 "Miscellaneous Masonry Accessories" Article.

H. Install vents in head joints in exterior wythes at spacing indicated. Use [**specified weep/vent products**] [**or**] [**open head joints**] to form vents.

1. Close cavities off vertically and horizontally with blocking in manner indicated. Install through-wall flashing and weep holes above horizontal blocking.

3.14 REINFORCED UNIT MASONRY INSTALLATION

A. Temporary Formwork and Shores: Construct formwork and shores as needed to support reinforced masonry elements during construction.

1. Construct formwork to provide shape, line, and dimensions of completed masonry as indicated. Make forms sufficiently tight to prevent leakage of mortar and grout. Brace, tie, and support forms to maintain position and shape during construction and curing of reinforced masonry.
2. Do not remove forms and shores until reinforced masonry members have hardened sufficiently to carry their own weight and other temporary loads that may be placed on them during construction.

B. Placing Reinforcement: Comply with requirements in [**ACI 530.1/ASCE 6/TMS 602**] [**Section 2104.5 in the Uniform Building Code**].

C. Grouting: Do not place grout until entire height of masonry to be grouted has attained enough strength to resist grout pressure.

1. Comply with requirements in [**ACI 530.1/ASCE 6/TMS 602**] [**Section 2104.6 in the Uniform Building Code**] for cleanouts and for grout placement, including minimum grout space and maximum pour height.
2. Limit height of vertical grout pours to not more than [**60 inches (1520 mm)**] <**Insert height**>.

3.15 FIELD QUALITY CONTROL

A. Inspectors: Owner will engage qualified independent inspectors to perform inspections and prepare reports. Allow inspectors access to scaffolding and work areas, as needed to perform inspections.

1. Place grout only after inspectors have verified compliance of grout spaces and grades, sizes, and locations of reinforcement.

B. Testing Agency: Owner will engage a qualified independent testing and inspecting agency to perform field tests and inspections indicated below and prepare test reports:

1. Payment for these services will be made [**by Owner**] [**from Testing and Inspecting Allowance, as authorized by Change Orders**].
2. Retesting of materials failing to comply with specified requirements shall be done at Contractor's expense.

C. Testing Frequency: One set of tests for each 5000 sq. ft. (465 sq. m) of wall area or portion thereof.

D. Clay Masonry Unit Test: For each type of unit provided, per ASTM C 67.

E. Concrete Masonry Unit Test: For each type of unit provided, per ASTM C 140.

F. Mortar Test (Property Specification): For each mix provided, per [**ASTM C 780**] [**UBC Standard 21-16**]. Test mortar for [**mortar air content**] [**and**] [**compressive strength**].

G. Grout Test (Compressive Strength): For each mix provided, per [**ASTM C 1019**] [**UBC Standard 21-18**].

H. Prism Test: For each type of construction provided, per [**ASTM C 1314**] [**UBC Standard 21-17**] at [**7 days and at**]28 days.

3.16 PARGING

A. Parge exterior faces of below-grade masonry walls, where indicated, in 2 uniform coats to a total thickness of 3/4 inch (19 mm). Dampen wall before applying first coat and scarify first coat to ensure full bond to subsequent coat.

B. Use a steel-trowel finish to produce a smooth, flat, dense surface with a maximum surface variation of 1/8 inch per foot (3 mm per 300 mm). Form a wash at top of parging and a cove at bottom.

C. Damp-cure parging for at least 24 hours and protect parging until cured.

3.17 REPAIRING, POINTING, AND CLEANING

A. Remove and replace masonry units that are loose, chipped, broken, stained, or otherwise damaged or that do not match adjoining units. Install new units to match adjoining units; install in fresh mortar, pointed to eliminate evidence of replacement.

B. Pointing: During the tooling of joints, enlarge voids and holes, except weep holes, and completely fill with mortar. Point up joints, including corners, openings, and adjacent construction, to provide a neat, uniform appearance. Prepare joints for sealant application, where indicated.

C. In-Progress Cleaning: Clean unit masonry as work progresses by dry brushing to remove mortar fins and smears before tooling joints.

D. Final Cleaning: After mortar is thoroughly set and cured, clean exposed masonry as follows:

1. Remove large mortar particles by hand with wooden paddles and nonmetallic scrape hoes or chisels.
2. Test cleaning methods on sample wall panel; leave one-half of panel uncleaned for comparison purposes. Obtain Architect's approval of sample cleaning before proceeding with cleaning of masonry.
3. Protect adjacent stone and nonmasonry surfaces from contact with cleaner by covering them with liquid strippable masking agent or polyethylene film and waterproof masking tape.
4. Wet wall surfaces with water before applying cleaners; remove cleaners promptly by rinsing surfaces thoroughly with clear water.
5. Clean brick by bucket-and-brush hand-cleaning method described in BIA Technical Notes 20.

6. Clean masonry with a proprietary acidic cleaner applied according to manufacturer's written instructions.
7. Clean concrete masonry by cleaning method indicated in NCMA TEK 8-2A applicable to type of stain on exposed surfaces.
8. Clean stone trim to comply with stone supplier's written instructions.
9. Clean limestone units to comply with recommendations in ILI's "Indiana Limestone Handbook."

3.18 MASONRY WASTE DISPOSAL

A. Salvageable Materials: Unless otherwise indicated, excess masonry materials are Contractor's property. At completion of unit masonry work, remove from Project site.

B. Waste Disposal as Fill Material: Dispose of clean masonry waste, including excess or soil-contaminated sand, waste mortar, and broken masonry units, by crushing and mixing with fill material as fill is placed.

1. Crush masonry waste to less than 4 inches (100 mm) in each dimension.
2. Mix masonry waste with at least two parts of specified fill material for each part of masonry waste. Fill material is specified in Division 2 Section "Earthwork."
3. Do not dispose of masonry waste as fill within 18 inches (450 mm) of finished grade.

C. Excess Masonry Waste: Remove excess clean masonry waste that cannot be used as fill, as described above, and other masonry waste, and legally dispose of off Owner's property.

END OF SECTION 04810

Division 5 – Metals

SECTION 05120 - STRUCTURAL STEEL

PART 1 - GENERAL

1.1 RELATED DOCUMENTS

A. Drawings and general provisions of the Contract, including General and Supplementary Conditions and Division 1 Specification Sections, apply to this Section.

1.2 SUMMARY

A. This Section includes the following:

1. Structural steel.
2. Architecturally exposed structural steel.
3. Prefabricated building columns.
4. Grout.

B. Related Sections include the following:

1. Division 1 Section "Quality Requirements" for independent testing agency procedures and administrative requirements.
2. Division 5 Section "Steel Deck" for field installation of shear connectors.
3. Division 5 Section "Metal Fabrications" for [**steel lintels or shelf angles not attached to structural-steel frame**] [**miscellaneous steel fabrications**] [**and**] [**other metal items**] not defined as structural steel.
4. [**Division 9 painting Sections**] [**and**] [**Division 9 Section "High-Performance Coatings"**] for surface preparation and priming requirements.
5. Division 13 Section "Metal Building Systems" for structural steel.

1.3 DEFINITIONS

A. Structural Steel: Elements of structural-steel frame, as classified by AISC's "Code of Standard Practice for Steel Buildings and Bridges," that support design loads.

B. Architecturally Exposed Structural Steel: Structural steel designated as architecturally exposed structural steel in the Contract Documents.

1.4 PERFORMANCE REQUIREMENTS

A. Connections: Provide details of[**simple shear**] connections required by the Contract Documents to be selected or completed by structural-steel fabricator to withstand [**ASD-service**] [**LRFD**] loads indicated and comply with other information and restrictions indicated.

1. Select and complete connections using [**schematic details indicated**] [**and**] [**AISC's "Manual of Steel Construction, Load and Resistance Factor Design," Volume 2,**

Part 9] [**AISC's "Manual of Steel Construction, Allowable Stress Design," Part 4**] <**Insert source**>.

2. Engineering Responsibility: Fabricator's responsibilities include using a qualified professional engineer to prepare structural analysis data for structural-steel connections.

B. Construction: Type [**PR, partially**] [**FR, fully**] restrained.

C. Construction: Type [**1, rigid frame**] [**2, simple framing**] [**3, semirigid framing**].

1.5 SUBMITTALS

A. Product Data: For each type of product indicated.

B. Shop Drawings: Show fabrication of structural-steel components.

1. Include details of cuts, connections, splices, camber, holes, and other pertinent data.
2. Include embedment drawings.
3. Indicate welds by standard AWS symbols, distinguishing between shop and field welds, and show size, length, and type of each weld.
4. Indicate type, size, and length of bolts, distinguishing between shop and field bolts. Identify pretensioned and slip-critical high-strength bolted connections.
5. For structural-steel connections indicated to comply with design loads, include structural analysis data [**signed and sealed**] [**prepared**] by the qualified professional engineer responsible for their preparation.

C. Welding certificates.

D. Qualification Data: For [**Installer**] [**fabricator**] [**professional engineer**] [**testing agency**].

E. Mill Test Reports: Signed by manufacturers certifying that the following products comply with requirements:

1. Structural steel including chemical and physical properties.
2. Bolts, nuts, and washers including mechanical properties and chemical analysis.
3. Direct-tension indicators.
4. Tension-control, high-strength bolt-nut-washer assemblies.
5. Shear stud connectors.
6. Shop primers.
7. Nonshrink grout.
8. <**Insert product.**>

F. Source quality-control test reports.

1.6 QUALITY ASSURANCE

A. Installer Qualifications: A qualified installer who participates in the AISC Quality Certification Program and is designated an AISC-Certified Erector, Category [**CASE**] [**CSE**].

B. Fabricator Qualifications: A qualified fabricator who participates in the AISC Quality Certification Program and is designated an AISC-Certified Plant, Category [**Cbd**] [**Sbd**].

C. Shop-Painting Applicators: Qualified according to AISC's Sophisticated Paint Endorsement [**P1**] [**P2**] [**P3**] or SSPC-QP 3, "Standard Procedure for Evaluating Qualifications of Shop Painting Applicators."

D. Welding: Qualify procedures and personnel according to AWS D1.1, "Structural Welding Code--Steel."

E. Comply with applicable provisions of the following specifications and documents:

1. AISC's "Code of Standard Practice for Steel Buildings and Bridges."
2. AISC's "Seismic Provisions for Structural Steel Buildings" and "Supplement No. 2."
3. AISC's "[**Specification for Structural Steel Buildings--Allowable Stress Design and Plastic Design**] [**Load and Resistance Factor Design Specification for Structural Steel Buildings**]."
4. AISC's "Specification for the Design of Steel Hollow Structural Sections."
5. AISC's "[**Specification for Allowable Stress Design of Single-Angle Members**] [**Specification for Load and Resistance Factor Design of Single-Angle Members**]."
6. RCSC's "Specification for Structural Joints Using ASTM A 325 or A 490 Bolts."

F. Mockups: Build mockups of architecturally exposed structural steel to set quality standards for fabrication and installation.

1. Coordinate finish painting requirements with Division 9 painting Sections.
2. Approved mockups may become part of the completed Work if undisturbed at time of Substantial Completion.

G. Preinstallation Conference: Conduct conference at Project site to comply with requirements in Division 1 Section "Project Management and Coordination."

1.7 DELIVERY, STORAGE, AND HANDLING

A. Store materials to permit easy access for inspection and identification. Keep steel members off ground and spaced by using pallets, dunnage, or other supports and spacers. Protect steel members and packaged materials from erosion and deterioration.

1. Store fasteners in a protected place. Clean and relubricate bolts and nuts that become dry or rusty before use.
2. Do not store materials on structure in a manner that might cause distortion, damage, or overload to members or supporting structures. Repair or replace damaged materials or structures as directed.

1.8 COORDINATION

A. Furnish anchorage items to be embedded in or attached to other construction without delaying the Work. Provide setting diagrams, sheet metal templates, instructions, and directions for installation.

PART 2 - PRODUCTS

2.1 STRUCTURAL-STEEL MATERIALS

A. W-Shapes: [**ASTM A 992/A 992M**] [**ASTM A 572/A 572M, Grade 50 (345)**] [**ASTM A 529/A 529M, Grade 50 (345)**] [**ASTM A 913/A 913M, Grade 50 (345)**].

B. Channels, Angles[**, M**] [**, S**]-Shapes: [**ASTM A 36/A 36M**] [**ASTM A 572/A 572M, Grade 50 (345)**] [**ASTM A 529/A 529M, Grade 50 (345)**] [**ASTM A 913/A 913M, Grade 50 (345)**].

C. Plate and Bar: [**ASTM A 36/A 36M**] [**ASTM A 572/A 572M, Grade 50 (345)**] [**ASTM A 529/A 529M, Grade 50 (345)**].

D. Corrosion-Resisting Structural Steel: ASTM A 588/A 588M, Grade 50 (345).

E. Cold-Formed Hollow Structural Sections: ASTM A 500, Grade [**B**] [**C**], structural tubing.

F. Corrosion-Resisting Cold-Formed Hollow Structural Sections: ASTM A 847, structural tubing.

G. Steel Pipe: ASTM A 53/A 53M, Type E or S, Grade B.

1. Weight Class: [**Standard**] [**Extra strong**] [**Double-extra strong**].
2. Finish: [**Black**] [**Galvanized**] [**Black, except where indicated to be galvanized**].

H. Medium-Strength Steel Castings: ASTM A 27/A 27M, Grade 65-35 (Grade 450-240), carbon steel.

I. High-Strength Steel Castings: ASTM A 148/A 148M,Grade 80-50 (Grade 550-345), carbon or alloy steel.

J. Welding Electrodes: Comply with AWS requirements.

2.2 BOLTS, CONNECTORS, AND ANCHORS

A. High-Strength Bolts, Nuts, and Washers: ASTM A 325 (ASTM A 325M), Type 1, heavy hex steel structural bolts; ASTM A 563 (ASTM A 563M) heavy hex carbon-steel nuts; and ASTM F 436 (ASTM F 436M) hardened carbon-steel washers.

1. Finish: [**Plain**] [**Hot-dip zinc coating, ASTM A 153/A 153M, Class C**] [**Mechanically deposited zinc coating, ASTM B 695, Class 50**].
2. Direct-Tension Indicators: ASTM F 959, Type 325 (ASTM F 959M, Type 8.8,) compressible-washer type.

a. Finish: [**Plain**] [**Mechanically deposited zinc coating, ASTM B 695, Class 50**] [**Mechanically deposited zinc coating, ASTM B 695, Class 50, baked epoxy coated**].

B. High-Strength Bolts, Nuts, and Washers: ASTM A 490 (ASTM A 490M), Type 1, heavy hex steel structural bolts[**or tension-control, bolt-nut-washer assemblies with splined ends**];

ASTM A 563 (ASTM A 563M) heavy hex carbon-steel nuts; and ASTM F 436 (ASTM F 436M) hardened carbon-steel washers, plain.

1. Direct-Tension Indicators: ASTM F 959, Type 490 (ASTM F 959M,) Type 10.9, compressible-washer type, plain.

C. Tension-Control, High-Strength Bolt-Nut-Washer Assemblies: ASTM F 1852, Type 1, [**heavy hex**] [**round**] head steel structural bolts with splined ends; ASTM A 563 (ASTM A 563M) heavy hex carbon-steel nuts; and ASTM F 436 (ASTM F 436M) hardened carbon-steel washers.

1. Finish: [**Plain**] [**Mechanically deposited zinc coating, ASTM B 695, Class 50**].

D. Shear Connectors: ASTM A 108, Grades 1015 through 1020, headed-stud type, cold-finished carbon steel; AWS D1.1, Type B.

E. Unheaded Anchor Rods: [**ASTM F 1554, Grade 36**] [**ASTM F 1554, Grade 55, weldable**] [**ASTM A 354**] [**ASTM A 449**] [**ASTM A 572/A 572M, Grade 50 (345)**] [**ASTM A 36/A 36M**] [**ASTM A 307, Grade A (ASTM F 568M, Property Class 4.6)**].

1. Configuration: [**Straight**] [**Hooked**].
2. Nuts: ASTM A 563 (ASTM A 563M) [**heavy**]hex carbon steel.
3. Plate Washers: ASTM A 36/A 36M carbon steel.
4. Washers: ASTM F 436 (ASTM F 436M) hardened carbon steel.
5. Finish: [**Plain**] [**Hot-dip zinc coating, ASTM A 153/A 153M, Class C**] [**Mechanically deposited zinc coating, ASTM B 695, Class 50**].

F. Headed Anchor Rods: [**ASTM F 1554, Grade 36**] [**ASTM F 1554, Grade 55, weldable**] [**ASTM A 354**] [**ASTM A 449**] [**ASTM A 307, Grade A (ASTM F 568M, Property Class 4.6)**], straight.

1. Nuts: ASTM A 563 (ASTM A 563M) [**heavy**]hex carbon steel.
2. Plate Washers: ASTM A 36/A 36M carbon steel.
3. Washers: ASTM F 436 (ASTM F 436M) hardened carbon steel.
4. Finish: [**Plain**] [**Hot-dip zinc coating, ASTM A 153/A 153M, Class C**] [**Mechanically deposited zinc coating, ASTM B 695, Class 50**].

G. Threaded Rods: [**ASTM A 193/A 193M**] [**ASTM A 354**] [**ASTM A 449**] [**A 572/A 572M, Grade 50 (345)**] [**ASTM A 36/A 36M**] [**ASTM A 307, Grade A (ASTM F 568M, Property Class 4.6)**].

1. Nuts: ASTM A 563 (ASTM A 563M) [**heavy**]hex carbon steel.
2. Washers: [**ASTM F 436 (ASTM F 436M) hardened**] [**ASTM A 36/A 36M**] carbon steel.
3. Finish: [**Plain**] [**Hot-dip zinc coating, ASTM A 153/A 153M, Class C**] [**Mechanically deposited zinc coating, ASTM B 695, Class 50**].

H. [**Clevises**] [**Turnbuckles**]: ASTM A 108, Grade 1035, cold-finished carbon steel.

I. Eye Bolts and Nuts: ASTM A 108, Grade 1030, cold-finished carbon steel.

J. Sleeve Nuts: ASTM A 108, Grade 1018, cold-finished carbon steel.

2.3 PRIMER

A. Primer: SSPC-Paint 25, Type [**I**] [**II**], iron oxide, zinc oxide, raw linseed oil, and alkyd.

B. Primer: SSPC-Paint 25 BCS, Type [**I**] [**II**], iron oxide, zinc oxide, raw linseed oil, and alkyd.

C. Primer: SSPC-Paint 23, latex primer.

D. Primer: Fabricator's standard lead- and chromate-free, nonasphaltic, rust-inhibiting primer.

E. Galvanizing Repair Paint: [**MPI#18, MPI#19, or SSPC-Paint 20**] [**ASTM A 780**].

2.4 GROUT

A. Cement Grout: Portland cement, ASTM C 150, Type I; and clean, natural sand, ASTM C 404, Size No. 2. Mix at ratio of 1 part cement to 2-1/2 parts sand, by volume, with minimum water required for placement and hydration.

B. Metallic, Shrinkage-Resistant Grout: ASTM C 1107, factory-packaged, metallic aggregate grout, mixed with water to consistency suitable for application and a 30-minute working time.

C. Nonmetallic, Shrinkage-Resistant Grout: ASTM C 1107, factory-packaged, nonmetallic aggregate grout, noncorrosive, nonstaining, mixed with water to consistency suitable for application and a 30-minute working time.

2.5 FABRICATION

A. Structural Steel: Fabricate and assemble in shop to greatest extent possible. Fabricate according to AISC's "Code of Standard Practice for Steel Buildings and Bridges" and AISC's "[**Specification for Structural Steel Buildings--Allowable Stress Design and Plastic Design**] [**Load and Resistance Factor Design Specification for Structural Steel Buildings**]."

1. Camber structural-steel members where indicated.
2. Identify high-strength structural steel according to ASTM A 6/ A 6M and maintain markings until structural steel has been erected.
3. Mark and match-mark materials for field assembly.
4. Complete structural-steel assemblies, including welding of units, before starting shop-priming operations.

B. Architecturally Exposed Structural Steel: Comply with fabrication requirements, including tolerance limits, of AISC's "Code of Standard Practice for Steel Buildings and Bridges" for structural steel identified as architecturally exposed structural steel.

1. Fabricate with exposed surfaces smooth, square, and free of surface blemishes including pitting, rust, scale,[**seam marks, roller marks, rolled trade names,**] and roughness.
2. Remove blemishes by filling or grinding or by welding and grinding, before cleaning, treating, and shop priming.

C. Thermal Cutting: Perform thermal cutting by machine to greatest extent possible.

1. Plane thermally cut edges to be welded to comply with requirements in AWS D1.1.

D. Bolt Holes: Cut, drill, [**mechanically thermal cut,**]or punch standard bolt holes perpendicular to metal surfaces.

E. Finishing: Accurately finish ends of columns and other members transmitting bearing loads.

F. Cleaning: Clean and prepare steel surfaces that are to remain unpainted according to [**SSPC-SP 1, "Solvent Cleaning**] [**SSPC-SP 2, "Hand Tool Cleaning**] [**SSPC-SP 3, "Power Tool Cleaning**]."

G. Shear Connectors: Prepare steel surfaces as recommended by manufacturer of shear connectors. Use automatic end welding of headed-stud shear connectors according to AWS D1.1 and manufacturer's written instructions.

H. Steel Wall-Opening Framing: Select true and straight members for fabricating steel wall-opening framing to be attached to structural steel. Straighten as required to provide uniform, square, and true members in completed wall framing.

I. Welded Door Frames: Build up welded door frames attached to structural steel. Weld exposed joints continuously and grind smooth. Plug-weld fixed steel bar stops to frames. Secure removable stops to frames with countersunk, cross-recessed head machine screws, uniformly spaced not more than 10 inches (250 mm) o.c., unless otherwise indicated.

J. Holes: Provide holes required for securing other work to structural steel and for passage of other work through steel framing members.

1. Cut, drill, or punch holes perpendicular to steel surfaces.[**Do not thermally cut bolt holes or enlarge holes by burning.**]
2. Base-Plate Holes: Cut, drill, mechanically thermal cut, or punch holes perpendicular to steel surfaces.
3. Weld threaded nuts to framing and other specialty items indicated to receive other work.

2.6 SHOP CONNECTIONS

A. High-Strength Bolts: Shop install high-strength bolts according to RCSC's "Specification for Structural Joints Using ASTM A 325 or A 490 Bolts" for type of bolt and type of joint specified.

1. Joint Type: [**Snug tightened**] [**Pretensioned**] [**Slip critical**].

B. Weld Connections: Comply with AWS D1.1 for welding procedure specifications, tolerances, appearance, and quality of welds and for methods used in correcting welding work.

1. Remove backing bars or runoff tabs, back gouge, and grind steel smooth.
2. Assemble and weld built-up sections by methods that will maintain true alignment of axes without exceeding tolerances of AISC's "Code of Standard Practice for Steel Buildings and Bridges" for mill material.

3. Verify that weld sizes, fabrication sequence, and equipment used for architecturally exposed structural steel will limit distortions to allowable tolerances.[**Prevent weld show-through on exposed steel surfaces.**]

   a. Grind butt welds flush.
   b. Grind or fill exposed fillet welds to smooth profile. Dress exposed welds.

2.7 PREFABRICATED BUILDING COLUMNS

A. General: Prefabricated building columns consisting of load-bearing structural-steel members encased in manufacturer's standard insulating concrete for fire protection and enclosed in an outer non-load-bearing steel shell.

1. Concrete Fill: Manufacturer's standard-mix structural concrete, with a minimum 28-day compressive strength of 5000 psi (34.5 MPa), machine mixed and mechanically vibrated during placement to produce concrete fill free of voids.

B. Fire-Resistance Ratings: Provide prefabricated building column listed and labeled by UL or another testing and inspecting agency acceptable to authorities having jurisdiction for ratings indicated, based on testing according to ASTM E 119.

1. Fire-Resistance Rating: [**4**] [**3**] [**2**] hours.

C. Column Configuration: Provide columns of sizes and shapes indicated. Fabricate connections to comply with details shown or as required to suit type of structure indicated.

D. Available Manufacturers: Subject to compliance with requirements, manufacturers offering prefabricated building columns that may be incorporated into the Work include, but are not limited to, the following:

E. Manufacturers: Subject to compliance with requirements, provide prefabricated building columns by one of the following:

1. Black Rock Column, Inc.
2. Dean, George H. Inc.
3. Fire-Trol Division; Dean Lally L.P.

2.8 SHOP PRIMING

A. Shop prime steel surfaces except the following:

1. Surfaces embedded in concrete or mortar. Extend priming of partially embedded members to a depth of 2 inches (50 mm).
2. Surfaces to be field welded.
3. Surfaces to be high-strength bolted with slip-critical connections.
4. Surfaces to receive sprayed fire-resistive materials.
5. Galvanized surfaces.

B. Surface Preparation: Clean surfaces to be painted. Remove loose rust and mill scale and spatter, slag, or flux deposits. Prepare surfaces according to the following specifications and standards:

1. SSPC-SP 2, "Hand Tool Cleaning."
2. SSPC-SP 3, "Power Tool Cleaning."
3. SSPC-SP 5/NACE No. 1, "White Metal Blast Cleaning."
4. SSPC-SP 6/NACE No. 3, "Commercial Blast Cleaning."
5. SSPC-SP 7/NACE No. 4, "Brush-Off Blast Cleaning."
6. SSPC-SP 8, "Pickling."
7. SSPC-SP 10/NACE No. 2, "Near-White Blast Cleaning."
8. SSPC-SP 11, "Power Tool Cleaning to Bare Metal."
9. SSPC-SP 14/NACE No. 8, "Industrial Blast Cleaning."

C. Priming: Immediately after surface preparation, apply primer according to manufacturer's written instructions and at rate recommended by SSPC to provide a dry film thickness of not less than 1.5 mils (0.038 mm). Use priming methods that result in full coverage of joints, corners, edges, and exposed surfaces.

1. Stripe paint corners, crevices, bolts, welds, and sharp edges.
2. Apply two coats of shop paint to inaccessible surfaces after assembly or erection. Change color of second coat to distinguish it from first.

D. Painting: Apply a 1-coat, nonasphaltic primer complying with SSPC-PS Guide 7.00, "Painting System Guide 7.00: Guide for Selecting One-Coat Shop Painting Systems," to provide a dry film thickness of not less than 1.5 mils (0.038 mm).

2.9 GALVANIZING

A. Hot-Dip Galvanized Finish: Apply zinc coating by the hot-dip process to structural steel according to ASTM A 123/ A 123M.

1. Fill vent holes and grind smooth after galvanizing.
2. Galvanize [**lintels**] [**shelf angles**] attached to structural-steel frame and located in exterior walls.

2.10 SOURCE QUALITY CONTROL

A. Owner will engage an independent testing and inspecting agency to perform shop tests and inspections and prepare test reports.

1. Provide testing agency with access to places where structural-steel work is being fabricated or produced to perform tests and inspections.

B. Correct deficiencies in Work that test reports and inspections indicate does not comply with the Contract Documents.

C. Bolted Connections: Shop-bolted connections will be[**tested and**] inspected according to RCSC's "Specification for Structural Joints Using ASTM A 325 or A 490 Bolts."

D. Welded Connections: In addition to visual inspection, shop-welded connections will be tested and inspected according to AWS D1.1 and the following inspection procedures, at testing agency's option:

1. Liquid Penetrant Inspection: ASTM E 165.
2. Magnetic Particle Inspection: ASTM E 709; performed on root pass and on finished weld. Cracks or zones of incomplete fusion or penetration will not be accepted.
3. Ultrasonic Inspection: ASTM E 164.
4. Radiographic Inspection: ASTM E 94.

E. In addition to visual inspection, shop-welded shear connectors will be tested and inspected according to requirements in AWS D1.1 for stud welding and as follows:

1. Bend tests will be performed if visual inspections reveal either a less-than- continuous 360-degree flash or welding repairs to any shear connector.
2. Tests will be conducted on additional shear connectors if weld fracture occurs on shear connectors already tested, according to requirements in AWS D1.1.

PART 3 - EXECUTION

3.1 EXAMINATION

A. Verify elevations of concrete- and masonry-bearing surfaces and locations of anchor rods, bearing plates, and other embedments, with steel erector present, for compliance with requirements.

B. Proceed with installation only after unsatisfactory conditions have been corrected.

3.2 PREPARATION

A. Provide temporary shores, guys, braces, and other supports during erection to keep structural steel secure, plumb, and in alignment against temporary construction loads and loads equal in intensity to design loads. Remove temporary supports when permanent structural steel, connections, and bracing are in place, unless otherwise indicated.

1. Do not remove temporary shoring supporting composite deck construction until cast-in-place concrete has attained its design compressive strength.

3.3 ERECTION

A. Set structural steel accurately in locations and to elevations indicated and according to AISC's "Code of Standard Practice for Steel Buildings and Bridges" and "[**Specification for Structural Steel Buildings--Allowable Stress Design and Plastic Design**] [**Load and Resistance Factor Design Specification for Structural Steel Buildings**]."

B. Base[**and Bearing**] Plates: Clean concrete- and masonry-bearing surfaces of bond-reducing materials, and roughen surfaces prior to setting base[**and bearing**] plates. Clean bottom surface of base[**and bearing**] plates.

1. Set base[**and bearing**] plates for structural members on wedges, shims, or setting nuts as required.
2. Weld plate washers to top of base plate.
3. [**Snug-tighten**] [**Pretension**] anchor rods after supported members have been positioned and plumbed. Do not remove wedges or shims but, if protruding, cut off flush with edge of base[**or bearing**] plate before packing with grout.
4. Promptly pack grout solidly between bearing surfaces and base[**or bearing**] plates so no voids remain. Neatly finish exposed surfaces; protect grout and allow to cure.[**Comply with manufacturer's written installation instructions for shrinkage-resistant grouts.**]

C. Maintain erection tolerances of structural steel[**and architecturally exposed structural steel**] within AISC's "Code of Standard Practice for Steel Buildings and Bridges."

D. Align and adjust various members forming part of complete frame or structure before permanently fastening. Before assembly, clean bearing surfaces and other surfaces that will be in permanent contact with members. Perform necessary adjustments to compensate for discrepancies in elevations and alignment.

1. Level and plumb individual members of structure.
2. Make allowances for difference between temperature at time of erection and mean temperature when structure is completed and in service.

E. Splice members only where indicated.

F. Remove erection bolts on welded, architecturally exposed structural steel; fill holes with plug welds; and grind smooth at exposed surfaces.

G. Do not use thermal cutting during erection[**unless approved by Architect. Finish thermally cut sections within smoothness limits in AWS D1.1**].

H. Do not enlarge unfair holes in members by burning or using drift pins. Ream holes that must be enlarged to admit bolts.

I. Shear Connectors: Prepare steel surfaces as recommended by manufacturer of shear connectors. Use automatic end welding of headed-stud shear connectors according to AWS D1.1 and manufacturer's written instructions.

3.4 FIELD CONNECTIONS

A. High-Strength Bolts: Install high-strength bolts according to RCSC's "Specification for Structural Joints Using ASTM A 325 or A 490 Bolts" for type of bolt and type of joint specified.

1. Joint Type: [**Snug tightened**] [**Pretensioned**] [**Slip critical**].

B. Weld Connections: Comply with AWS D1.1 for welding procedure specifications, tolerances, appearance, and quality of welds and for methods used in correcting welding work.

1. Comply with AISC's "Code of Standard Practice for Steel Buildings and Bridges" and "[**Specification for Structural Steel Buildings--Allowable Stress Design and Plastic**

Design] [**Load and Resistance Factor Design Specification for Structural Steel Buildings**]" for bearing, adequacy of temporary connections, alignment, and removal of paint on surfaces adjacent to field welds.

2. Remove backing bars or runoff tabs, back gouge, and grind steel smooth.
3. Assemble and weld built-up sections by methods that will maintain true alignment of axes without exceeding tolerances of AISC's "Code of Standard Practice for Steel Buildings and Bridges" for mill material.
4. Verify that weld sizes, fabrication sequence, and equipment used for architecturally exposed structural steel will limit distortions to allowable tolerances.[**Prevent weld show-through on exposed steel surfaces.**]

    a. Grind butt welds flush.
    b. Grind or fill exposed fillet welds to smooth profile. Dress exposed welds.

3.5 PREFABRICATED BUILDING COLUMNS

A. Install prefabricated building columns to comply with AISC's "[**Specification for Structural Steel Buildings--Allowable Stress Design and Plastic Design**] [**Load and Resistance Factor Design Specification for Structural Steel Buildings**]," manufacturer's written recommendations, and requirements of testing and inspecting agency that apply to the fire-resistance rating indicated.

3.6 FIELD QUALITY CONTROL

A. Testing Agency: Owner will engage a qualified independent testing and inspecting agency to inspect [**field welds**] [**and**] [**high-strength bolted connections**].

B. Bolted Connections: Shop-bolted connections will be[**tested and**] inspected according to RCSC's "Specification for Structural Joints Using ASTM A 325 or A 490 Bolts."

C. Welded Connections: Field welds will be visually inspected according to AWS D1.1.

1. In addition to visual inspection, field welds will be tested according to AWS D1.1 and the following inspection procedures, at testing agency's option:

    a. Liquid Penetrant Inspection: ASTM E 165.
    b. Magnetic Particle Inspection: ASTM E 709; performed on root pass and on finished weld. Cracks or zones of incomplete fusion or penetration will not be accepted.
    c. Ultrasonic Inspection: ASTM E 164.
    d. Radiographic Inspection: ASTM E 94.

D. In addition to visual inspection, test and inspect field-welded shear connectors according to requirements in AWS D1.1 for stud welding and as follows:

1. Perform bend tests if visual inspections reveal either a less-than- continuous 360-degree flash or welding repairs to any shear connector.
2. Conduct tests on additional shear connectors if weld fracture occurs on shear connectors already tested, according to requirements in AWS D1.1.

E. Correct deficiencies in Work that test reports and inspections indicate does not comply with the Contract Documents.

3.7 REPAIRS AND PROTECTION

A. Repair damaged galvanized coatings on galvanized items with galvanized repair paint according to ASTM A 780 and manufacturer's written instructions.

B. Touchup Painting: After installation, promptly clean, prepare, and prime or reprime field connections, rust spots, and abraded surfaces of prime-painted joists and accessories[**, bearing plates,**] and abutting structural steel.

1. Clean and prepare surfaces by SSPC-SP 2 hand-tool cleaning or SSPC-SP 3 power-tool cleaning.
2. Apply a compatible primer of same type as shop primer used on adjacent surfaces.

C. Touchup Painting: Cleaning and touchup painting are specified in Division 9 painting Sections.

END OF SECTION 05120

SECTION 05500 - METAL FABRICATIONS

PART 1 - GENERAL

1.1 RELATED DOCUMENTS

A. Drawings and general provisions of the Contract, including General and Supplementary Conditions and Division 1 Specification Sections, apply to this Section.

1.2 SUMMARY

A. This Section includes the following:

1. Steel framing and supports for ceiling-hung toilet compartments.
2. Steel framing and supports for operable partitions.
3. Steel framing and supports for overhead doors.
4. Steel framing and supports for countertops.
5. Steel framing and supports for mechanical and electrical equipment.
6. Steel framing and supports for applications where framing and supports are not specified in other Sections.
7. Steel framing and supports (outriggers) for window-washing equipment including [**mounting brackets**] [**and**] [**anchorages**].
8. [**Mounting brackets**] [**and**] [**anchorages**] for window-washing equipment.
9. Elevator machine beams[**, hoist beams,**] [**and**] [**divider beams**].
10. Support angles for elevator door sills.
11. Steel girders for supporting wood frame construction.
12. Steel pipe columns for supporting wood frame construction.
13. Prefabricated building columns.
14. Shelf angles.
15. Loose bearing and leveling plates.
16. Steel weld plates and angles for casting into concrete not specified in other Sections.
17. Structural-steel door frames.
18. Miscellaneous steel trim including [**steel angle corner guards**] [**steel edgings**] [**and**] [**loading-dock edge angles**].
19. Metal ladders.
20. Ladder safety cages.
21. Metal ships' ladders.
22. Metal bollards.
23. Pipe guards.
24. Bicycle racks.
25. Metal floor plate[**and supports**].
26. Abrasive metal [**nosings**] [**treads**] [**and**] [**thresholds**].
27. Cast-iron wheel guards.
28. Metal downspout boots.

B. Products furnished, but not installed, under this Section include the following:

1. Loose steel lintels.
2. Anchor bolts, steel pipe sleeves, and wedge-type inserts indicated to be cast into concrete or built into unit masonry.

C. Related Sections include the following:

1. Division 3 Section "Cast-in-Place Concrete" for installing anchor bolts, steel pipe sleeves, wedge-type inserts and other items indicated to be cast into concrete.
2. Division 4 Section "Unit Masonry Assemblies" for installing loose lintels, anchor bolts, and other items indicated to be built into unit masonry.
3. Division 5 Section "Structural Steel."
4. Division 5 Section "Metal Stairs."
5. Division 5 Section "Pipe and Tube Railings."
6. Division 5 Section "Gratings."
7. Division 5 Section "Ornamental Metal."
8. Division 5 Section "Ornamental Railings."
9. Division 6 Section "[**Rough Carpentry**] [**Miscellaneous Carpentry**]" for metal framing anchors.
10. Division 6 Section "Heavy Timber Construction" for timber connectors.
11. Division 6 Section "Structural Glued-Laminated Timber" for timber connectors.
12. Division 10 Section "Wire Mesh Partitions."
13. Division 14 Section "Electric Traction Elevators" for [**elevator pit ladders**] [**and**] [**support angles for elevator door sills**].
14. Division 14 Section "Hydraulic Elevators" for [**elevator pit ladders**] [**and**] [**support angles for elevator door sills**].

1.3 PERFORMANCE REQUIREMENTS

A. Structural Performance of Ladders: Provide ladders capable of withstanding the effects of loads and stresses within limits and under conditions specified in ANSI A14.3.

B. Thermal Movements: Provide exterior metal fabrications that allow for thermal movements resulting from the following maximum change (range) in ambient and surface temperatures by preventing buckling, opening of joints, overstressing of components, failure of connections, and other detrimental effects. Base engineering calculation on surface temperatures of materials due to both solar heat gain and nighttime-sky heat loss.

1. Temperature Change (Range): 120 deg F (67 deg C), ambient; 180 deg F (100 deg C), material surfaces.

1.4 SUBMITTALS

A. Product Data: For the following:

1. Nonslip aggregates and nonslip-aggregate surface finishes.
2. Prefabricated building columns.
3. Metal nosings and treads.
4. Paint products.
5. Grout.

B. Shop Drawings: Show fabrication and installation details for metal fabrications.

1. Include plans, elevations, sections, and details of metal fabrications and their connections. Show anchorage and accessory items.
2. Provide templates for anchors and bolts specified for installation under other Sections.
3. For installed products indicated to comply with design loads, include structural analysis data signed and sealed by the qualified professional engineer responsible for their preparation.

C. Samples for Verification: For each type and finish of extruded [**nosing**] [**and**] [**tread**].

D. Mill Certificates: Signed by manufacturers of stainless-steel sheet certifying that products furnished comply with requirements.

E. Welding certificates.

F. Qualification Data: For professional engineer.

1.5 QUALITY ASSURANCE

A. Welding: Qualify procedures and personnel according to the following:

1. AWS D1.1, "Structural Welding Code--Steel."
2. AWS D1.2, "Structural Welding Code--Aluminum."
3. AWS D1.3, "Structural Welding Code--Sheet Steel."
4. AWS D1.6, "Structural Welding Code--Stainless Steel."

1.6 PROJECT CONDITIONS

A. Field Measurements: Verify actual locations of walls and other construction contiguous with metal fabrications by field measurements before fabrication and indicate measurements on Shop Drawings.

1. Established Dimensions: Where field measurements cannot be made without delaying the Work, establish dimensions and proceed with fabricating metal fabrications without field measurements. Coordinate wall and other contiguous construction to ensure that actual dimensions correspond to established dimensions.
2. Provide allowance for trimming and fitting at site.

1.7 COORDINATION

A. Coordinate installation of anchorages for metal fabrications. Furnish setting drawings, templates, and directions for installing anchorages, including sleeves, concrete inserts, anchor bolts, and items with integral anchors, that are to be embedded in concrete or masonry. Deliver such items to Project site in time for installation.

B. Coordinate installation of steel weld plates and angles for casting into concrete that are specified in this Section but required for work of another Section. Deliver such items to Project site in time for installation.

PART 2 - PRODUCTS

2.1 MANUFACTURERS

A. In other Part 2 articles where titles below introduce lists, the following requirements apply to product selection:

1. Available Products: Subject to compliance with requirements, products that may be incorporated into the Work include, but are not limited to, products specified.
2. Products: Subject to compliance with requirements, provide one of the products specified.
3. Available Manufacturers: Subject to compliance with requirements, manufacturers offering products that may be incorporated into the Work include, but are not limited to, manufacturers specified.
4. Manufacturers: Subject to compliance with requirements, provide products by one of the manufacturers specified.

2.2 METALS, GENERAL

A. Metal Surfaces, General: Provide materials with smooth, flat surfaces, unless otherwise indicated. For metal fabrications exposed to view in the completed Work, provide materials without seam marks, roller marks, rolled trade names, or blemishes.

2.3 FERROUS METALS

A. Steel Plates, Shapes, and Bars: ASTM A 36/A 36M.

B. Stainless-Steel Sheet, Strip, Plate, and Flat Bars: ASTM A 666, Type [**304**] [**316L**].

C. Stainless-Steel Bars and Shapes: ASTM A 276, Type [**304**] [**316L**].

D. Rolled-Steel Floor Plate: ASTM A 786/A 786M, rolled from plate complying with ASTM A 36/A 36M or ASTM A 283/A 283M, Grade C or D.

E. Rolled-Stainless-Steel Floor Plate: ASTM A 793.

F. Abrasive-Surface Floor Plate: Steel plate [**with abrasive granules rolled into surface**] [**or**] [**with abrasive material metallically bonded to steel by a proprietary process**].

1. [**Available**]Products:

a. IKG Industries, a Harsco company; Mebac.
b. W. S. Molnar Company; SlipNOT.
c. <**Insert manufacturer's name; product.**>

G. Steel Tubing: ASTM A 500, cold-formed steel tubing.

H. Steel Pipe: ASTM A 53/A 53M, standard weight (Schedule 40), unless another weight is indicated or required by structural loads.

I. Slotted Channel Framing: Cold-formed metal channels with continuous slot complying with MFMA-3.

1. Size of Channels: [**1-5/8 by 1-5/8 inches (41 by 41 mm)**] [**As indicated**].
2. Material: Galvanized steel complying with ASTM A 653/A 653M, [**commercial steel, Type B**] [**structural steel, Grade 33 (Grade 230)**], with G90 (Z275) coating; [**0.108-inch (2.8-mm)**] [**0.079-inch (2-mm)**] [**0.064-inch (1.6-mm)**] nominal thickness.
3. Material: Steel complying with ASTM A 1008/A 1008M, [**commercial steel, Type B**] [**structural steel, Grade 33 (Grade 230)**]; [**0.0966-inch (2.5-mm)**] [**0.0677-inch (1.7-mm)**] [**0.0528-inch (1.35-mm)**] minimum thickness; [**unfinished**] [**coated with rust-inhibitive, baked-on, acrylic enamel**] [**hot-dip galvanized after fabrication**].

J. Cast Iron: ASTM A 48/A 48M, Class 30, unless another class is indicated or required by structural loads.

2.4 NONFERROUS METALS

A. Aluminum Plate and Sheet: ASTM B 209 (ASTM B 209M), Alloy 6061-T6.

B. Aluminum Extrusions: ASTM B 221 (ASTM B 221M), Alloy 6063-T6.

C. Aluminum-Alloy Rolled Tread Plate: ASTM B 632/B 632M, Alloy 6061-T6.

D. Aluminum Castings: ASTM B 26/B 26M, Alloy 443.0-F.

E. Bronze Plate, Sheet, Strip, and Bars: ASTM B 36/B 36M, Alloy UNS No. C28000 (muntz metal, 60 percent copper).

F. Bronze Extrusions: ASTM B 455, Alloy UNS No. C38500 (extruded architectural bronze).

G. Bronze Castings: ASTM B 584, Alloy UNS No. C83600 (leaded red brass) or No. C84400 (leaded semired brass).

H. Nickel Silver Extrusions: ASTM B 151/B 151M, Alloy UNS No. C74500.

I. Nickel Silver Castings: ASTM B 584, Alloy UNS No. C97600 (20 percent leaded nickel bronze).

2.5 FASTENERS

A. General: Unless otherwise indicated, provide Type [**304**] [**316**] stainless-steel fasteners for exterior use and zinc-plated fasteners with coating complying with ASTM B 633, Class Fe/Zn 5, at exterior walls. Provide stainless-steel fasteners for fastening aluminum. Select fasteners for type, grade, and class required.

B. Steel Bolts and Nuts: Regular hexagon-head bolts, ASTM A 307, Grade A (ASTM F 568M, Property Class 4.6); with hex nuts, ASTM A 563 (ASTM A 563M); and, where indicated, flat washers.

C. Stainless-Steel Bolts and Nuts: Regular hexagon-head annealed stainless-steel bolts, nuts and, where indicated, flat washers; ASTM F 593 (ASTM F 738M) for bolts and ASTM F 594 (ASTM F 836M) for nuts, Alloy Group [**1 (A1)**] [**2 (A4)**].

D. Anchor Bolts: ASTM F 1554, Grade 36.

1. Provide hot-dip or mechanically deposited, zinc-coated anchor bolts where item being fastened is indicated to be galvanized.

E. Eyebolts: ASTM A 489.

F. Machine Screws: ASME B18.6.3 (ASME B18.6.7M).

G. Lag Bolts: ASME B18.2.1 (ASME B18.2.3.8M).

H. Wood Screws: Flat head, ASME B18.6.1.

I. Plain Washers: Round, ASME B18.22.1 (ASME B18.22M).

J. Lock Washers: Helical, spring type, ASME B18.21.1 (ASME B18.21.2M).

K. Cast-in-Place Anchors in Concrete: Anchors capable of sustaining, without failure, a load equal to four times the load imposed, as determined by testing according to ASTM E 488, conducted by a qualified independent testing agency.

1. Threaded or wedge type; galvanized ferrous castings, either ASTM A 47/A 47M malleable iron or ASTM A 27/A 27M cast steel. Provide bolts, washers, and shims as needed, hot-dip galvanized per ASTM A 153/A 153M.

L. Expansion Anchors: Anchor bolt and sleeve assembly with capability to sustain, without failure, a load equal to six times the load imposed when installed in unit masonry and four times the load imposed when installed in concrete, as determined by testing according to ASTM E 488, conducted by a qualified independent testing agency.

1. Material for Anchors in Interior Locations: Carbon-steel components zinc-plated to comply with ASTM B 633, Class Fe/Zn 5.
2. Material for Anchors in Exterior Locations: Alloy Group [**1 (A1)**] [**2 (A4)**] stainless-steel bolts complying with ASTM F 593 (ASTM F 738M) and nuts complying with ASTM F 594 (ASTM F 836M).

2.6 MISCELLANEOUS MATERIALS

A. Welding Rods and Bare Electrodes: Select according to AWS specifications for metal alloy welded.

B. Shop Primers: Provide primers that comply with Division 9 [**painting Sections.**] [**Section "High-Performance Coatings."**]

C. Universal Shop Primer: Fast-curing, lead- and chromate-free, universal modified-alkyd primer complying with MPI#79.

1. Use primer with a VOC content of [**420 g/L (3.5 lb/gal.)**] <**Insert VOC limit**> or less when calculated according to 40 CFR 59, Subpart D (EPA Method 24).
2. Use primer containing pigments that make it easily distinguishable from zinc-rich primer.

D. Zinc-Rich Primer: Complying with SSPC-Paint 20 or SSPC-Paint 29 and compatible with topcoat.

1. Use primer with a VOC content of [**420 g/L (3.5 lb/gal.)**] <**Insert VOC limit**> or less when calculated according to 40 CFR 59, Subpart D (EPA Method 24).
2. [**Available**]Products:

a. Benjamin Moore & Co.; Epoxy Zinc-Rich Primer CM18/19.
b. Carboline Company; Carbozinc 621.
c. ICI Devoe Coatings; Catha-Coat 313.
d. International Coatings Limited; Interzinc 315 Epoxy Zinc-Rich Primer.
e. PPG Architectural Finishes, Inc.; Aquapon Zinc-Rich Primer 97-670.
f. Sherwin-Williams Company (The); Corothane I GalvaPac Zinc Primer.
g. Tnemec Company, Inc.; Tneme-Zinc 90-97.
h. <**Insert manufacturer's name; product name or designation.**>

E. Galvanizing Repair Paint: High-zinc-dust-content paint for regalvanizing welds in steel, complying with SSPC-Paint 20.

F. Bituminous Paint: Cold-applied asphalt emulsion complying with ASTM D 1187.

G. Nonshrink, Metallic Grout: Factory-packaged, ferrous-aggregate grout complying with ASTM C 1107, specifically recommended by manufacturer for heavy-duty loading applications.

H. Nonshrink, Nonmetallic Grout: Factory-packaged, nonstaining, noncorrosive, nongaseous grout complying with ASTM C 1107. Provide grout specifically recommended by manufacturer for interior and exterior applications.

I. Concrete Materials and Properties: Comply with requirements in Division 3 Section "Cast-in-Place Concrete" for normal-weight, air-entrained, ready-mix concrete with a minimum 28-day compressive strength of 3000 psi (20 MPa), unless otherwise indicated.

2.7 FABRICATION, GENERAL

A. Shop Assembly: Preassemble items in the shop to greatest extent possible. Disassemble units only as necessary for shipping and handling limitations. Use connections that maintain structural value of joined pieces. Clearly mark units for reassembly and coordinated installation.

B. Cut, drill, and punch metals cleanly and accurately. Remove burrs and ease edges to a radius of approximately 1/32 inch (1 mm), unless otherwise indicated. Remove sharp or rough areas on exposed surfaces.

C. Form bent-metal corners to smallest radius possible without causing grain separation or otherwise impairing work.

D. Form exposed work true to line and level with accurate angles and surfaces and straight edges.

E. Weld corners and seams continuously to comply with the following:

1. Use materials and methods that minimize distortion and develop strength and corrosion resistance of base metals.
2. Obtain fusion without undercut or overlap.
3. Remove welding flux immediately.
4. At exposed connections, finish exposed welds and surfaces smooth and blended so no roughness shows after finishing and contour of welded surface matches that of adjacent surface.

F. Form exposed connections with hairline joints, flush and smooth, using concealed fasteners where possible. Where exposed fasteners are required, use Phillips flat-head (countersunk) screws or bolts, unless otherwise indicated. Locate joints where least conspicuous.

G. Fabricate seams and other connections that will be exposed to weather in a manner to exclude water. Provide weep holes where water may accumulate.

H. Cut, reinforce, drill, and tap metal fabrications as indicated to receive finish hardware, screws, and similar items.

I. Provide for anchorage of type indicated; coordinate with supporting structure. Space anchoring devices to secure metal fabrications rigidly in place and to support indicated loads.

1. Where units are indicated to be cast into concrete or built into masonry, equip with integrally welded steel strap anchors, 1/8 by 1-1/2 inches (3.2 by 38 mm), with a minimum 6-inch (150-mm) embedment and 2-inch (50-mm) hook, not less than 8 inches (200 mm) from ends and corners of units and 24 inches (600 mm) o.c., unless otherwise indicated.

2.8 MISCELLANEOUS FRAMING AND SUPPORTS

A. General: Provide steel framing and supports not specified in other Sections as needed to complete the Work.

B. Fabricate units from steel shapes, plates, and bars of welded construction, unless otherwise indicated. Fabricate to sizes, shapes, and profiles indicated and as necessary to receive adjacent construction retained by framing and supports. Cut, drill, and tap units to receive hardware, hangers, and similar items.

1. Fabricate units from slotted channel framing where indicated.
2. Furnish inserts if units are installed after concrete is placed.

C. Fabricate supports for operable partitions from continuous steel beams of sizes indicated with attached bearing plates, anchors, and braces as indicated. Drill bottom flanges of beams to receive partition track hanger rods; locate holes where indicated on operable partition Shop Drawings.

D. Fabricate steel girders for wood frame construction from continuous steel shapes of sizes indicated.

1. Provide bearing plates welded to beams where indicated.
2. Drill girders and plates for field-bolted connections where indicated.
3. Where wood nailers are attached to girders with bolts or lag screws, drill holes at 24 inches (600 mm) o.c.

E. Fabricate steel pipe columns for supporting wood frame construction from steel pipe with steel baseplates and top plates as indicated. Drill baseplates and top plates for anchor and connection bolts and weld to pipe with fillet welds all around. Make welds the same size as pipe wall thickness, unless otherwise indicated.

1. Unless otherwise indicated, fabricate from Schedule 40 steel pipe.
2. Unless otherwise indicated, provide 1/2-inch (12.7-mm) baseplates with four 5/8-inch (16-mm) anchor bolts and 1/4-inch (6.4-mm) top plates.

F. Galvanize miscellaneous framing and supports where indicated.

G. Prime miscellaneous framing and supports with zinc-rich primer where indicated.

2.9 PREFABRICATED BUILDING COLUMNS

A. General: Provide prefabricated building columns consisting of load-bearing structural-steel members protected by insulating concrete fireproofing encased in an outer non-load-bearing steel shell.

B. Fire-Resistance Ratings: Provide prefabricated building columns listed and labeled by a testing and inspecting agency acceptable to authorities having jurisdiction for ratings indicated, based on testing according to ASTM E 119.

1. Fire-Resistance Rating: [**4 hours**] [**3 hours**] [**2 hours**] [**As indicated**].

C. Column Configuration: Provide columns of sizes and shapes indicated. Fabricate connections to comply with details shown or as needed to suit type of structure indicated.

1. Concrete Fill: Manufacturer's standard structural concrete, with minimum compressive strength of 4200 psi (29 MPa), machine mixed and mechanically vibrated during placement to produce concrete core free of voids.

D. [**Available**]Manufacturers:

1. Black Rock Column, Inc.
2. Dean, George H., Inc.
3. Firetrol Division; Dean Lally L. P.
4. <**Insert manufacturer's name.**>

2.10 LOOSE STEEL LINTELS

A. Fabricate loose steel lintels from steel angles and shapes of size indicated for openings and recesses in masonry walls and partitions at locations indicated. Weld adjoining members together to form a single unit where indicated.

B. Size loose lintels to provide bearing length at each side of openings equal to 1/12 of clear span but not less than 8 inches (200 mm), unless otherwise indicated.

C. Galvanize loose steel lintels located in exterior walls.

D. Prime loose steel lintels located in exterior walls with zinc-rich primer.

2.11 SHELF ANGLES

A. Fabricate shelf angles from steel angles of sizes indicated and for attachment to concrete framing. Provide horizontally slotted holes to receive 3/4-inch (19-mm) bolts, spaced not more than 6 inches (150 mm) from ends and 24 inches (600 mm) o.c., unless otherwise indicated.

1. Provide mitered and welded units at corners.
2. Provide open joints in shelf angles at expansion and control joints. Make open joint approximately 2 inches (50 mm) larger than expansion or control joint.

B. For cavity walls, provide vertical channel brackets to support angles from backup masonry and concrete.

C. Galvanize shelf angles located in exterior walls.

D. Prime shelf angles located in exterior walls with zinc-rich primer.

E. Furnish wedge-type concrete inserts, complete with fasteners, to attach shelf angles to cast-in-place concrete.

2.12 LOOSE BEARING AND LEVELING PLATES

A. Provide loose bearing and leveling plates for steel items bearing on masonry or concrete construction. Drill plates to receive anchor bolts and for grouting.

B. Galvanize plates after fabrication.

C. Prime plates with zinc-rich primer.

2.13 STEEL WELD PLATES AND ANGLES

A. Provide steel weld plates and angles not specified in other Sections, for items supported from concrete construction as needed to complete the Work. Provide each unit with not less than two integrally welded steel strap anchors for embedding in concrete.

2.14 STRUCTURAL-STEEL DOOR FRAMES

A. Fabricate structural-steel door frames from steel shapes, plates, and bars of size and to dimensions indicated, fully welded together, with 5/8-by-1-1/2-inch (16-by-38-mm) steel channel stops, unless otherwise indicated. Plug-weld built-up members and continuously weld exposed joints. Secure removable stops to frame with countersunk machine screws, uniformly spaced at not more than 10 inches (250 mm) o.c. Reinforce frames and drill and tap as necessary to accept finish hardware.

1. Provide with integrally welded steel strap anchors for securing door frames into adjoining concrete or masonry.

B. Extend bottom of frames to floor elevation indicated with steel angle clips welded to frames for anchoring frame to floor with expansion shields and bolts.

C. Galvanize [**exterior steel frames**] [**and**] [**interior steel frames, where indicated**].

D. Prime [**exterior steel frames**] [**and**] [**interior steel frames, where indicated**] with zinc-rich primer.

2.15 MISCELLANEOUS STEEL TRIM

A. Unless otherwise indicated, fabricate units from steel shapes, plates, and bars of profiles shown with continuously welded joints and smooth exposed edges. Miter corners and use concealed field splices where possible.

B. Provide cutouts, fittings, and anchorages as needed to coordinate assembly and installation with other work.

1. Provide with integrally welded steel strap anchors for embedding in concrete or masonry construction.

C. Galvanize [**exterior miscellaneous steel trim**] [**and**] [**interior miscellaneous steel trim, where indicated**].

D. Prime [**exterior miscellaneous steel trim**] [**and**] [**interior miscellaneous steel trim, where indicated**] with zinc-rich primer.

2.16 METAL LADDERS

A. General:

1. Comply with ANSI A14.3, unless otherwise indicated.
2. For elevator pit ladders, comply with ASME A17.1.
3. Space siderails [**16 inches (406 mm)**] [**18 inches (457 mm)**] apart, unless otherwise indicated.
4. Support each ladder[**at top and bottom and not more than 60 inches (1500 mm) o.c.**] with welded or bolted brackets, made from same metal as ladder.

B. Steel Ladders:

1. Siderails: Continuous, [**3/8-by-2-1/2-inch (9.5-by-64-mm)**] [**1/2-by-2-1/2-inch (12.7-by-64-mm)**] steel flat bars, with eased edges.
2. Rungs: [**3/4-inch- (19-mm-) diameter**] [**3/4-inch- (19-mm-) square**] [**1-inch- (25-mm-) diameter**] [**1-inch- (25-mm-) square**] steel bars.
3. Fit rungs in centerline of siderails; plug-weld and grind smooth on outer rail faces.
4. Provide nonslip surfaces on top of each rung, either by coating rung with aluminum-oxide granules set in epoxy-resin adhesive or by using a type of manufactured rung filled with aluminum-oxide grout.
5. Provide nonslip surfaces on top of each rung by coating with abrasive material metallically bonded to rung by a proprietary process.
6. [**Available**]Products:

    a. IKG Industries, a Harsco company; Mebac.
    b. W. S. Molnar Company; SlipNOT.
    c. <**Insert manufacturer's name; product name or designation.**>

7. Galvanize [**exterior ladders**] [**and**] [**interior ladders, where indicated**], including brackets and fasteners.
8. Prime [**exterior ladders**] [**and**] [**interior ladders, where indicated**], including brackets and fasteners, with zinc-rich primer.

C. Aluminum Ladders:

1. Siderails: Continuous extruded-aluminum channels or tubes, not less than 2-1/2 inches (64 mm) deep, 3/4 inch (19 mm) wide, and 1/8 inch (3.2 mm) thick.
2. Rungs: Extruded-aluminum tubes, not less than 3/4 inch (19 mm) deep and not less than 1/8 inch (3.2 mm) thick, with ribbed tread surfaces.
3. Fit rungs in centerline of siderails; fasten by welding or with stainless-steel fasteners or brackets and aluminum rivets.

2.17 LADDER SAFETY CAGES

A. General:

1. Fabricate ladder safety cages to comply with ANSI A14.3. Assemble by welding or with stainless-steel fasteners.
2. Provide primary hoops at tops and bottoms of cages and spaced not more than 20 feet (6 m) o.c. Provide secondary intermediate hoops spaced not more than 48 inches (1200 mm) o.c. between primary hoops.
3. Fasten assembled safety cage to ladder rails and adjacent construction by welding or with stainless-steel fasteners, unless otherwise indicated.

B. Steel Ladder Safety Cages:

1. Primary Hoops: 1/4-by-4-inch (6.4-by-100-mm) flat bar hoops.
2. Secondary Intermediate Hoops: 1/4-by-2-inch (6.4-by-50-mm) flat bar hoops.
3. Vertical Bars: 3/16-by-1-1/2-inch (4.8-by-38-mm) flat bars secured to each hoop.
4. Galvanize [**exterior ladder cages**] [**and**] [**interior ladder cages, where indicated**], including fasteners.

5. Prime [**exterior ladder cages**] [**and**] [**interior ladder cages, where indicated**], including fasteners, with zinc-rich primer.

C. Aluminum Ladder Safety Cages:

1. Primary Hoops: 1/4-by-4-inch (6.4-by-100-mm) flat bar hoops.
2. Secondary Intermediate Hoops: 1/4-by-2-inch (6.4-by-50-mm) flat bar hoops.
3. Vertical Bars: 1/4-by-2-inch (6.4-by-50-mm) flat bars secured to each hoop.

2.18 METAL SHIPS' LADDERS

A. Provide metal ships' ladders where indicated. Fabricate of open-type construction with channel or plate stringers, pipe and tube railings, and bar grating treads, unless otherwise indicated. Provide brackets and fittings for installation.

1. Fabricate ships' ladders, including treads and railings from [**steel**] [**aluminum**] [**stainless steel**].
2. Comply with applicable requirements in Division 5 Section "[**Metal Stairs**] [**Pipe and Tube Railings**]" for railings.

B. Galvanize [**exterior steel ships' ladders**] [**and**] [**interior steel ships' ladders, where indicated**], including treads, railings, brackets, and fasteners.

C. Prime [**exterior steel ships' ladders**] [**and**] [**interior steel ships' ladders, where indicated**], including treads, railings, brackets, and fasteners, with zinc-rich primer.

2.19 METAL BOLLARDS

A. Fabricate metal bollards from [**Schedule 40 steel pipe**] [**Schedule 80 steel pipe**] [**1/4-inch (6.4-mm) wall-thickness rectangular steel tubing**] [**steel shapes, as indicated**].

1. Cap bollards with 1/4-inch- (6.4-mm-) thick steel plate.
2. Where bollards are indicated to receive push-button controls for door operators, provide necessary cutouts for push-button controls and hole for wire.

B. Fabricate bollards with 3/8-inch- (9.5-mm-) thick steel baseplates for bolting to concrete slab. Drill baseplates at all 4 corners for 3/4-inch (19-mm) anchor bolts.

1. Where bollards are to be anchored to sloping concrete slabs, angle baseplates for plumb alignment of bollards.

C. Fabricate sleeves for bollard anchorage from steel [**pipe**] [**or**] [**tubing**] with 1/4-inch- (6.4-mm-) thick steel plate welded to bottom of sleeve. Make sleeves not less than 8 inches (200 mm) deep and 3/4 inch (19 mm) larger than OD of bollard.

D. Fabricate internal sleeves for removable bollards from Schedule 40 steel pipe or 1/4-inch (6.4-mm) wall-thickness steel tubing with an OD approximately 1/16 inch (1.5 mm) less than ID of bollards. Match drill sleeve and bollard for 3/4 inch (19 mm) steel machine bolt.

2.20 PIPE GUARDS

A. Fabricate pipe guards from 3/8-inch- (9.5-mm-) thick by 12-inch- (300-mm-) wide steel plate, bent to fit flat against the wall or column at both ends and to fit around pipe with 2-inch (50-mm) clearance between pipe and pipe guard. Drill each end for two 3/4-inch (19-mm) anchor bolts.

B. Galvanize pipe guards after fabrication.

2.21 BICYCLE RACKS

A. Fabricate from Schedule 40 steel pipe, fully welded together, to lengths indicated.

B. Fabricate with NPS 3 (DN 80) top rails and end posts, NPS 1-1/2 (DN 40) bottom rails[**and intermediate posts not more than 72 inches (1800 mm) o.c.**], and NPS 3/4 (DN 20) vertical separators at approximately 8 inches (200 mm) o.c.

C. Make top rails 36 inches (900 mm) above pavement/floor and bottom rails 4 inches (100 mm) above pavement/floor.

D. Fabricate end posts[**and intermediate posts**] with 1/4-inch- (6.4-mm-) thick steel baseplates for bolting to concrete slab. Drill end post baseplates at all 4 corners[**and intermediate-post baseplates at 2 opposite sides**] for 1/2-inch (12.7-mm) anchor bolts.

E. Galvanize bicycle racks after fabrication.

F. Prime bicycle racks with zinc-rich primer.

2.22 METAL FLOOR PLATE

A. Fabricate from [**rolled-steel floor**] [**rolled-stainless-steel floor**] [**rolled-aluminum-alloy tread**] [**abrasive-surface floor**] plate of thickness indicated below:

1. Thickness: [**1/8 inch (3.2 mm)**] [**3/16 inch (4.8 mm)**] [**1/4 inch (6.4 mm)**] [**5/16 inch (8 mm)**] [**3/8 inch (9.5 mm)**] [**As indicated**].

B. Provide [**steel**] [**stainless-steel**] [**aluminum**] angle supports as indicated.

C. Include [**steel**] [**stainless-steel**] [**aluminum**] angle stiffeners, and fixed and removable sections as indicated.

D. Provide flush [**steel**] [**stainless-steel**] [**aluminum**] bar drop handles for lifting removable sections, one at each end of each section.

2.23 ABRASIVE METAL [**NOSINGS**] [**TREADS**] [**AND**] [**THRESHOLDS**]

A. Cast-Metal Units: Cast [**gray iron, Class 20**] [**aluminum**] [**bronze (leaded red or semired brass)**] [**nickel silver (leaded nickel bronze)**], with an integral abrasive finish consisting of

aluminum oxide, silicon carbide, or a combination of both. Fabricate units in sizes and configurations indicated and in lengths necessary to accurately fit openings or conditions.

1. [**Available**]Manufacturers:

    a. American Safety Tread Co., Inc.
    b. Balco Inc.
    c. Barry Pattern & Foundry Co., Inc.
    d. Granite State Casting Co.
    e. Safe-T-Metal Co.
    f. Wooster Products Inc.
    g. <**Insert manufacturer's name.**>

2. Nosings: Cross-hatched units, 4 inches (100 mm) wide with [**1/4-inch (6-mm)**] [**1-inch (25-mm)**] lip, for casting into concrete steps.
3. Nosings: Cross-hatched units, 1-1/2 by 1-1/2 inches (38 by 38 mm), for casting into concrete curbs.
4. Treads: Cross-hatched units, full depth of tread with 3/4-by-3/4-inch (19-by-19-mm) nosing, for application over bent plate treads or existing stairs.
5. Thresholds: Fluted-saddle-type units, 5 inches (125 mm) wide by 1/2 inch (12 mm) high, with tapered edges.
6. Thresholds: Fluted-interlocking- (hook-strip-) type units, 5 inches (125 mm) wide by 5/8 inch (16 mm) high, with tapered edge.
7. Thresholds: Plain-stepped- (stop-) type units, 5 inches (125 mm) wide by 1/2 inch (12 mm) high, with 1/2-inch (12-mm) step.

B. Extruded Units: [**Aluminum**] [**Bronze**], with abrasive filler consisting of aluminum oxide, silicon carbide, or a combination of both, in an epoxy-resin binder. Fabricate units in sizes and configurations indicated and in lengths necessary to accurately fit openings or conditions.

1. [**Available**]Manufacturers:

    a. ACL Industries, Inc.
    b. American Safety Tread Co., Inc.
    c. Amstep Products.
    d. Armstrong Products, Inc.
    e. Balco Inc.
    f. Granite State Casting Co.
    g. Wooster Products Inc.
    h. <**Insert manufacturer's name.**>

2. Provide ribbed units, with abrasive filler strips projecting 1/16 inch (1.5 mm) above aluminum extrusion.
3. Provide solid-abrasive-type units without ribs.
4. Nosings: Square-back units, [**1-7/8 inches (48 mm)**] [**3 inches (75 mm)**] [**4 inches (100 mm)**] wide, for casting into concrete steps.
5. Nosings: Beveled-back units, [**3 inches (75 mm)**] [**4 inches (100 mm)**] wide with 1-3/8-inch (35-mm) lip, for surface mounting on existing stairs.
6. Nosings: Two-piece units, 3 inches (75 mm) wide, with subchannel for casting into concrete steps.

7. Treads: [**Square**] [**Beveled**]-back units, full depth of tread with 1-3/8-inch (35-mm) lip, for application over existing stairs.

C. Provide anchors for embedding units in concrete, either integral or applied to units, as standard with manufacturer.

D. Drill for mechanical anchors and countersink. Locate not more than 4 inches (100 mm) from ends and not more than 12 inches (300 mm) o.c., evenly spaced between ends, unless otherwise indicated. Provide closer spacing if recommended by manufacturer.

1. Provide 2 rows of holes for units more than 5 inches (125 mm) wide, with 2 holes aligned at ends and intermediate holes staggered.

E. Apply bituminous paint to concealed bottoms, sides, and edges of cast-metal units set into concrete.

F. Apply clear lacquer to concealed bottoms, sides, and edges of extruded units set into concrete.

2.24 CAST-IRON WHEEL GUARDS

A. Provide wheel guards of 3/4-inch- (19-mm-) thick, hollow-core, gray-iron castings; of size and shape indicated. Provide holes for countersunk anchor bolts and grouting.

2.25 METAL DOWNSPOUT BOOTS

A. Provide downspout boots made from [**cast gray iron**] [**cast aluminum**] in heights indicated with inlets of size and shape to suit downspouts.

1. Outlet: [**Vertical, to discharge into pipe**] [**Horizontal, to discharge into pipe**] [**At 35 degrees from horizontal, to discharge onto splash block or pavement**].

2.26 FINISHES, GENERAL

A. Comply with NAAMM's "Metal Finishes Manual for Architectural and Metal Products" for recommendations for applying and designating finishes.

B. Finish metal fabrications after assembly.

2.27 STEEL AND IRON FINISHES

A. Galvanizing: Hot-dip galvanize items as indicated to comply with applicable standard listed below:

1. ASTM A 123/A 123M, for galvanizing steel and iron products.
2. ASTM A 153/A 153M, for galvanizing steel and iron hardware.

B. Preparation for Shop Priming: Prepare uncoated ferrous-metal surfaces to comply with minimum requirements indicated below for SSPC surface preparation specifications and environmental exposure conditions of installed metal fabrications:

1. Exteriors (SSPC Zone 1B)[**and Items Indicated to Receive Zinc-Rich Primer**]: SSPC-SP 6/NACE No. 3, "Commercial Blast Cleaning."
2. Interiors (SSPC Zone 1A): SSPC-SP 3, "Power Tool Cleaning."

C. Shop Priming: Apply shop primer to uncoated surfaces of metal fabrications, except those with galvanized finishes and those to be embedded in concrete, sprayed-on fireproofing, or masonry, unless otherwise indicated. Comply with SSPC-PA 1, "Paint Application Specification No. 1: Shop, Field, and Maintenance Painting of Steel," for shop painting.

1. Stripe paint corners, crevices, bolts, welds, and sharp edges.

2.28 STAINLESS-STEEL FINISHES

A. Remove tool and die marks and stretch lines or blend into finish.

B. Grind and polish surfaces to produce uniform, directionally textured, polished finish indicated, free of cross scratches. Run grain with long dimension of each piece.

C. Bright, Directional Satin Finish: No. 4.

D. Dull Satin Finish: No. 6.

E. When polishing is completed, passivate and rinse surfaces. Remove embedded foreign matter and leave surfaces chemically clean.

2.29 ALUMINUM FINISHES

A. Finish designations prefixed by AA comply with the system established by the Aluminum Association for designating aluminum finishes.

B. As-Fabricated Finish: AA-M10 (Mechanical Finish: as fabricated, unspecified).

C. Class I, Clear Anodic Finish: AA-M12C22A41 (Mechanical Finish: nonspecular as fabricated; Chemical Finish: etched, medium matte; Anodic Coating: Architectural Class I, clear coating 0.018 mm or thicker) complying with AAMA 611.

2.30 COPPER-ALLOY FINISHES

A. Finish designations for copper alloys comply with the system established for designating copper-alloy finish systems defined in NAAMM's "Metal Finishes Manual for Architectural and Metal Products."

B. Cast-[**Bronze**] [**Nickel Silver**] Finish: M12 (Mechanical Finish: matte finish, as fabricated).

C. Extruded-[**Bronze**] [**Nickel Silver**] Finish: M11 (Mechanical Finish: specular, as fabricated).

D. Bronze Plate, Sheet, Strip, and Bar Finish: M10 (Mechanical Finish: unspecified, as fabricated).

PART 3 - EXECUTION

3.1 INSTALLATION, GENERAL

A. Cutting, Fitting, and Placement: Perform cutting, drilling, and fitting required for installing metal fabrications. Set metal fabrications accurately in location, alignment, and elevation; with edges and surfaces level, plumb, true, and free of rack; and measured from established lines and levels.

B. Fit exposed connections accurately together to form hairline joints. Weld connections that are not to be left as exposed joints but cannot be shop welded because of shipping size limitations. Do not weld, cut, or abrade surfaces of exterior units that have been hot-dip galvanized after fabrication and are for bolted or screwed field connections.

C. Field Welding: Comply with the following requirements:

1. Use materials and methods that minimize distortion and develop strength and corrosion resistance of base metals.
2. Obtain fusion without undercut or overlap.
3. Remove welding flux immediately.
4. At exposed connections, finish exposed welds and surfaces smooth and blended so no roughness shows after finishing and contour of welded surface matches that of adjacent surface.

D. Fastening to In-Place Construction: Provide anchorage devices and fasteners where metal fabrications are required to be fastened to in-place construction. Provide threaded fasteners for use with concrete and masonry inserts, toggle bolts, through bolts, lag bolts, wood screws, and other connectors.

E. Provide temporary bracing or anchors in formwork for items that are to be built into concrete, masonry, or similar construction.

F. Corrosion Protection: Coat concealed surfaces of aluminum that will come into contact with grout, concrete, masonry, wood, or dissimilar metals with a heavy coat of bituminous paint.

3.2 INSTALLING MISCELLANEOUS FRAMING AND SUPPORTS

A. General: Install framing and supports to comply with requirements of items being supported, including manufacturers' written instructions and requirements indicated on Shop Drawings.

B. Anchor supports for operable partitions securely to and rigidly brace from building structure.

C. Support steel girders on solid grouted masonry, concrete, or steel pipe columns. Secure girders with anchor bolts embedded in grouted masonry or concrete or with bolts through top plates of pipe columns.

1. Where grout space under bearing plates is indicated for girders supported on concrete or masonry, install as specified in "Installing Bearing and Leveling Plates" Article.

D. Install pipe columns on concrete footings with grouted baseplates. Position and grout column baseplates as specified in "Installing Bearing and Leveling Plates" Article.

1. Grout baseplates of columns supporting steel girders after girders are installed and leveled.

3.3 INSTALLING PREFABRICATED BUILDING COLUMNS

A. Install prefabricated building columns to comply with AISC's "Specification for Structural Steel Buildings Allowable Stress Design and Plastic Design with Commentary" and with requirements applicable to listing and labeling for fire-resistance rating indicated.

3.4 INSTALLING BEARING AND LEVELING PLATES

A. Clean concrete and masonry bearing surfaces of bond-reducing materials, and roughen to improve bond to surfaces. Clean bottom surface of plates.

B. Set bearing and leveling plates on wedges, shims, or leveling nuts. After bearing members have been positioned and plumbed, tighten anchor bolts. Do not remove wedges or shims but, if protruding, cut off flush with edge of bearing plate before packing with grout.

1. Use nonshrink grout, either metallic or nonmetallic, in concealed locations where not exposed to moisture; use nonshrink, nonmetallic grout in exposed locations, unless otherwise indicated.
2. Pack grout solidly between bearing surfaces and plates to ensure that no voids remain.

3.5 INSTALLING METAL BOLLARDS

A. Anchor bollards to existing construction with [**expansion anchors**] [**anchor bolts**] [**through bolts**]. Provide four 3/4-inch (19-mm) bolts at each bollard, unless otherwise indicated.

1. Embed anchor bolts at least 4 inches (100 mm) in concrete.

B. Anchor bollards in concrete [**with pipe sleeves preset and anchored into concrete**] [**in formed or core-drilled holes not less than 8 inches (200 mm) deep and 3/4 inch (19 mm) larger than OD of bollard**]. Fill annular space around bollard solidly with nonshrink, nonmetallic grout; mixed and placed to comply with grout manufacturer's written instructions. Slope grout up approximately 1/8 inch (3 mm) toward bollard.

C. Anchor bollards in place with concrete footings. Center and align bollards in holes 3 inches (75 mm) above bottom of excavation. Place concrete and vibrate or tamp for consolidation. Support and brace bollards in position until concrete has cured.

D. Anchor internal sleeves for removable bollards in [**concrete by inserting into pipe sleeves preset into concrete**] [**formed or core-drilled holes not less than 8 inches (200 mm) deep and 3/4 inch (19 mm) larger than OD of sleeve**]. Fill annular space around internal sleeves

solidly with nonshrink, nonmetallic grout; mixed and placed to comply with grout manufacturer's written instructions. Slope grout up approximately 1/8 inch (3 mm) toward internal sleeve.

E. Anchor internal sleeves for removable bollards in place with concrete footings. Center and align sleeves in holes 3 inches (75 mm) above bottom of excavation. Place concrete and vibrate or tamp for consolidation. Support and brace sleeves in position until concrete has cured.

F. Place removable bollards over internal sleeves and secure with 3/4-inch (19-mm) machine bolts and nuts. After tightening nuts, drill holes in bolts for inserting padlocks. Owner will furnish padlocks.

G. Fill bollards solidly with concrete, mounding top surface to shed water.

1. Do not fill removable bollards with concrete.

3.6 INSTALLING PIPE GUARDS

A. Provide pipe guards at exposed vertical pipes in parking garage where not protected by curbs or other barriers. Install by bolting to wall or column with expansion anchors. Provide four 3/4-inch (19-mm) bolts at each pipe guard. Mount pipe guards with top edge 26 inches (660 mm) above driving surface.

3.7 INSTALLING BICYCLE RACKS

A. Anchor bicycle racks to existing construction with expansion anchors. Provide four 1/2-inch (12.7-mm) bolts at each end post[**and 2 at each intermediate post**].

3.8 INSTALLING NOSINGS, TREADS, AND THRESHOLDS

A. Center nosings on tread widths.

B. For nosings embedded in concrete steps or curbs, align nosings flush with riser faces and level with tread surfaces.

C. Seal thresholds exposed to exterior with elastomeric sealant complying with Division 7 Section "Joint Sealants" to provide a watertight installation.

3.9 INSTALLING CAST-IRON WHEEL GUARDS

A. Anchor wheel guards to concrete or masonry construction to comply with manufacturer's written instructions. Fill cores solidly with concrete.

3.10 ADJUSTING AND CLEANING

A. Touchup Painting: Immediately after erection, clean field welds, bolted connections, and abraded areas. Paint uncoated and abraded areas with the same material as used for shop painting to comply with SSPC-PA 1 for touching up shop-painted surfaces.

1. Apply by brush or spray to provide a minimum 2.0-mil (0.05-mm) dry film thickness.

B. Touchup Painting: Cleaning and touchup painting of field welds, bolted connections, and abraded areas of shop paint are specified in Division 9 painting Sections.

C. Galvanized Surfaces: Clean field welds, bolted connections, and abraded areas and repair galvanizing to comply with ASTM A 780.

END OF SECTION 05500

SECTION 05511 - METAL STAIRS

PART 1 - GENERAL

1.1 RELATED DOCUMENTS

A. Drawings and general provisions of the Contract, including General and Supplementary Conditions and Division 1 Specification Sections, apply to this Section.

1.2 SUMMARY

A. This Section includes the following:

1. Preassembled steel stairs with [**concrete-filled**] [**precast concrete**] [**epoxy-resin-filled**] [**and**] [**abrasive-coating-finished formed-metal**] treads.
2. Industrial-type stairs with steel [**floor plate**] [**grating**] treads.
3. Ornamental steel-framed stairs.
4. [**Steel tube**] railings attached to metal stairs.
5. [**Steel tube**] handrails attached to walls adjacent to metal stairs.
6. Railing gates at the level of exit discharge.

B. Related Sections include the following:

1. Division 3 Section "Cast-in-Place Concrete" for concrete fill for stair treads and platforms.
2. Division 5 Section "Metal Fabrications" for metal treads and nosings not installed in metal stairs.
3. Division 5 Section "Pipe and Tube Railings" for pipe and tube railings.
4. Division 5 Section "Pipe and Tube Railings" for pipe and tube railings not attached to metal stairs or to walls adjacent to metal stairs.
5. Division 5 Section "Ornamental Railings" for ornamental metal railings.
6. Division 6 Section "[**Rough Carpentry**] [**Miscellaneous Carpentry**]" for wood blocking for anchoring railings.
7. Division 9 Section "[**Gypsum Plaster**] [**Gypsum Veneer Plaster**] [**Gypsum Board Assemblies**] [**Gypsum Board Shaft-Wall Assemblies**]" for metal backing for anchoring railings.
8. Division 9 Section "Ceramic Tile" for ceramic-tile treads and landings[**for ornamental steel-framed stairs**].
9. Division 9 Section "[**Cementitious Terrazzo**] [**Epoxy Terrazzo**]" for terrazzo treads and landings[**for ornamental steel-framed stairs**].
10. Division 9 Section "Wood Flooring" for wood treads and landings[**for ornamental steel-framed stairs**].
11. Division 9 Section "Stone Paving and Flooring" for stone treads and landings[**for ornamental steel-framed stairs**].
12. Division 10 Section "Wire Mesh Partitions" for wire mesh security partitions and doors.

1.3 PERFORMANCE REQUIREMENTS

A. Structural Performance of Stairs: Provide metal stairs capable of withstanding the effects of gravity loads and the following loads and stresses within limits and under conditions indicated:

1. Uniform Load: 100 lbf/sq. ft. (4.79 kN/sq. m).
2. Concentrated Load: 300 lbf (1.33 kN) applied on an area of 4 sq. in. (2580 sq. mm).
3. Uniform and concentrated loads need not be assumed to act concurrently.
4. Stair Framing: Capable of withstanding stresses resulting from railing loads in addition to loads specified above.
5. Limit deflection of treads, platforms, and framing members to [**L/240**] [**L/360**] <**Insert deflection ratio**> or 1/4 inch (6.4 mm), whichever is less.

B. Structural Performance of Railings: Provide railings capable of withstanding the effects of gravity loads and the following loads and stresses within limits and under conditions indicated:

1. Handrails:
    a. Uniform load of 50 lbf/ ft. (0.73 kN/m) applied in any direction.
    b. Concentrated load of 200 lbf (0.89 kN) applied in any direction.
    c. Uniform and concentrated loads need not be assumed to act concurrently.
2. Top Rails of Guards:
    a. Uniform load of [**50 lbf/ ft. (0.73 kN/m) applied in any direction**] [**50 lbf/ ft. (0.73 kN/m) applied horizontally and concurrently with 100 lbf/ ft. (1.46 kN/m) applied vertically downward**].
    b. Concentrated load of 200 lbf (0.89 kN) applied in any direction.
    c. Uniform and concentrated loads need not be assumed to act concurrently.
3. Infill of Guards:
    a. Concentrated load of [**50 lbf (0.22 kN)**] [**200 lbf (0.89 kN)**] applied horizontally on an area of 1 sq. ft. (0.093 sq. m).
    b. Uniform load of 25 lbf/sq. ft. (1.2 kN/sq. m) applied horizontally.
    c. Infill load and other loads need not be assumed to act concurrently.

C. Seismic Performance: Provide metal stairs capable of withstanding the effects of earthquake motions determined according to [**ASCE 7, "Minimum Design Loads for Buildings and Other Structures": Section 9, "Earthquake Loads."**] <**Insert applicable code requirement.**>

1.4 SUBMITTALS

A. Product Data: For metal stairs and the following:

1. Prefilled metal-pan stair treads.
2. Precast concrete treads.
3. Epoxy-resin-filled stair treads.
4. Nonslip aggregates and nonslip-aggregate finishes.

5. Abrasive nosings.
6. Metal floor plate treads.
7. Paint products.
8. Grout.

B. Shop Drawings: Include plans, elevations, sections, details, and attachments to other work.

1. Provide templates for anchors and bolts specified for installation under other Sections.
2. For installed products indicated to comply with design loads, include structural analysis data signed and sealed by the qualified professional engineer responsible for their preparation.

C. Samples for Initial Selection: For products involving selection of color, texture, or design.

D. Samples for Verification: For the following products, in manufacturer's standard sizes:

1. Precast concrete treads.
2. Epoxy-resin-filled stair treads.
3. Stair treads with nonslip-aggregate surface finish.
4. Metal floor plate treads.
5. Grating treads.
6. Abrasive nosings.

E. Welding certificates.

F. Qualification Data: For [**professional engineer**] [**testing agency**].

G. Product Test Reports: Based on evaluation of comprehensive tests performed by a qualified testing agency, for [**stairs**] [**and**] [**railings**].

1. Test railings according ASTM E 894 and ASTM E 935.

1.5 QUALITY ASSURANCE

A. Installer Qualifications: Fabricator of products.

B. NAAMM Stair Standard: Comply with "Recommended Voluntary Minimum Standards for Fixed Metal Stairs" in NAAMM AMP 510, "Metal Stairs Manual," for class of stair designated, unless more stringent requirements are indicated.

1. Preassembled Stairs: [**Commercial**] [**Service**] class.
2. Industrial-Type Stairs: Industrial class.
3. Ornamental Stairs: Architectural class.

C. Welding: Qualify procedures and personnel according to the following:

1. AWS D1.1, "Structural Welding Code--Steel."
2. AWS D1.3, "Structural Welding Code--Sheet Steel."

1.6 COORDINATION

A. Coordinate installation of anchorages for metal stairs. Furnish setting drawings, templates, and directions for installing anchorages, including sleeves, concrete inserts, anchor bolts, and items with integral anchors, that are to be embedded in concrete or masonry. Deliver such items to Project site in time for installation.

B. Coordinate locations of hanger rods and struts with other work so that they will not encroach on required stair width and will be within the fire-resistance-rated stair enclosure.

PART 2 - PRODUCTS

2.1 MANUFACTURERS

A. In other Part 2 articles where titles below introduce lists, the following requirements apply to product selection:

1. Available Products: Subject to compliance with requirements, products that may be incorporated into the Work include, but are not limited to, products specified.
2. Products: Subject to compliance with requirements, provide one of the products specified.
3. Available Manufacturers: Subject to compliance with requirements, manufacturers offering products that may be incorporated into the Work include, but are not limited to, manufacturers specified.
4. Manufacturers: Subject to compliance with requirements, provide products by one of the manufacturers specified.

2.2 METALS, GENERAL

A. Metal Surfaces, General: Provide materials with smooth, flat surfaces, unless otherwise indicated. For components exposed to view in the completed Work, provide materials without seam marks, roller marks, rolled trade names, or blemishes.

2.3 FERROUS METALS

A. Steel Plates, Shapes, and Bars: ASTM A 36/A 36M.

B. Steel Tubing: [**ASTM A 500 (cold formed)**] [**or**] [**ASTM A 513, Type 5 (mandrel drawn)**].

C. Rolled-Steel Floor Plate: ASTM A 786/A 786M, rolled from plate complying with ASTM A 36/A 36M or ASTM A 283/A 283M, Grade C or D.

D. Abrasive-Surface Floor Plate: Steel plate [**with abrasive granules rolled into surface**] [**or**] [**with abrasive material metallically bonded to steel by a proprietary process**].

1. [**Available**]Products:

a. IKG Industries, a Harsco company; Mebac.

b. W. S. Molnar Company; SlipNOT.
c. <**Insert manufacturer's name; product name or designation.**>

E. Steel Bars for Grating Treads: ASTM A 36/A 36M.

F. Wire Rod for Grating Crossbars: ASTM A 510 (ASTM A 510M).

G. Iron Castings: Either gray or malleable iron, unless otherwise indicated.

1. Gray Iron: ASTM A 48/A 48M, Class 30, unless another class is indicated or required by structural loads.
2. Malleable Iron: ASTM A 47/A 47M.

H. Uncoated, Cold-Rolled Steel Sheet: ASTM A 1008/A 1008M,[**either commercial steel, Type B, or**] structural steel, Grade 25 (Grade 170), unless another grade is required by design loads; exposed.

I. Uncoated, Hot-Rolled Steel Sheet: ASTM A 1011/A 1011M,[**either commercial steel, Type B, or**] structural steel, Grade 30 (Grade 205), unless another grade is required by design loads.

J. Galvanized Steel Sheet: ASTM A 653/A 653M, G90 (Z275) coating,[**either commercial steel, Type B, or**] structural steel, Grade 33 (Grade 230), unless another grade is required by design loads.

K. Expanded Metal, Carbon Steel: ASTM F 1267, Type [**I (expanded)**] [**II (expanded and flattened)**], Class 1 (uncoated).

1. Style Designation: [**3/4 number 13**] [**1-1/2 number 10**] <**Insert designation**>.

L. Woven-Wire Mesh: Intermediate-crimp, [**diamond**] [**square**] pattern, 2-inch (50-mm) woven-wire mesh, made from 0.135-inch (3.5-mm) nominal diameter wire complying with ASTM A 510 (ASTM A 510M).

2.4 NONFERROUS METALS

A. Aluminum Extrusions: ASTM B 221 (ASTM B 221M), Alloy 6063-T6.

B. Aluminum Castings: ASTM B 26/B 26M, Alloy 443.0-F.

C. Bronze Extrusions: ASTM B 455, Alloy UNS No. C38500 (extruded architectural bronze).

D. Bronze Castings: ASTM B 584, Alloy UNS No. C83600 (leaded red brass) or No. C84400 (leaded semired brass).

E. Nickel Silver Castings: ASTM B 584, Alloy UNS No. C97600 (20 percent leaded nickel bronze).

2.5 ABRASIVE NOSINGS

A. Cast-Metal Units: Cast [**gray iron, Class 20**] [**aluminum**] [**bronze (leaded red or semired brass)**] [**nickel silver (leaded nickel bronze)**], with an integral abrasive finish consisting of aluminum oxide, silicon carbide, or a combination of both. Fabricate units in sizes and configurations indicated and in lengths necessary to accurately fit openings or conditions.

1. [**Available**]Manufacturers:

    a. American Safety Tread Co., Inc.
    b. Balco Inc.
    c. Barry Pattern & Foundry Co., Inc.
    d. Granite State Casting Co.
    e. Safe-T-Metal Co.
    f. Wooster Products Inc.
    g. <**Insert manufacturer's name.**>

2. Configuration: Cross-hatched units, [**3 inches (75 mm)**] [**4 inches (100 mm)**] wide without lip.
3. Configuration: Cross-hatched angle-shaped units, same depth as bar-grating treads and 1 to 1-1/2 inches (25 to 38 mm) wide.

B. Extruded Units: Extruded-[**aluminum**] [**bronze**] units with abrasive filler consisting of aluminum oxide, silicon carbide, or a combination of both, in an epoxy-resin binder. Fabricate units in sizes and configurations indicated and in lengths necessary to accurately fit openings or conditions.

1. [**Available**]Manufacturers:

    a. ACL Industries, Inc.
    b. American Safety Tread Co., Inc.
    c. Amstep Products.
    d. Armstrong Products, Inc.
    e. Balco Inc.
    f. Granite State Casting Co.
    g. Wooster Products Inc.
    h. <**Insert manufacturer's name.**>

2. Provide ribbed units, with abrasive filler strips projecting 1/16 inch (1.5 mm) above aluminum extrusion.
3. Provide solid-abrasive-type units without ribs.
4. Nosings: Square-back units, [**1-7/8 inches (48 mm)**] [**3 inches (75 mm)**] [**4 inches (100 mm)**] wide, without lip.
5. Nosings: Two-piece units, 3 inches (75 mm) wide, with subchannel for casting into concrete.

C. Provide anchors for embedding units in concrete, either integral or applied to units, as standard with manufacturer.

D. Apply bituminous paint to concealed bottoms, sides, and edges of cast-metal units set into concrete.

E. Apply clear lacquer to concealed bottoms, sides, and edges of extruded units set into concrete.

2.6 FASTENERS

A. General: Provide zinc-plated fasteners with coating complying with ASTM B 633, Class Fe/Zn 25 for exterior use, and Class Fe/Zn 5 where built into exterior walls. Select fasteners for type, grade, and class required.

B. Bolts and Nuts: Regular hexagon-head bolts, ASTM A 307, Grade A (ASTM F 568M, Property Class 4.6); with hex nuts, ASTM A 563 (ASTM A 563M); and, where indicated, flat washers.

C. Anchor Bolts: ASTM F 1554, Grade 36.

1. Provide hot-dip or mechanically deposited, zinc-coated anchor bolts for [**exterior stairs**] [**stairs indicated to be galvanized**] [**stairs indicated to be shop primed with zinc-rich primer**].

D. Machine Screws: ASME B18.6.3 (ASME B18.6.7M).

E. Lag Bolts: ASME B18.2.1 (ASME B18.2.3.8M).

F. Plain Washers: Round, ASME B18.22.1 (ASME B18.22M).

G. Lock Washers: Helical, spring type, ASME B18.21.1 (ASME B18.21.2M).

H. Expansion Anchors: Anchor bolt and sleeve assembly with capability to sustain, without failure, a load equal to six times the load imposed when installed in unit masonry and four times the load imposed when installed in concrete, as determined by testing according to ASTM E 488, conducted by a qualified independent testing agency.

1. Material for Anchors in Interior Locations: Carbon-steel components zinc-plated to comply with ASTM B 633, Class Fe/Zn 5.
2. Material for Anchors in Exterior Locations: Alloy Group 1 (A1) stainless-steel bolts complying with ASTM F 593 (ASTM F 738M) and nuts complying with ASTM F 594 (ASTM F 836M).

2.7 MISCELLANEOUS MATERIALS

A. Welding Rods and Bare Electrodes: Select according to AWS specifications for metal alloy welded.

B. Shop Primers: Provide primers that comply with Division 9 [**painting Sections.**] [**Section "High-Performance Coatings."**]

C. Universal Shop Primer: Fast-curing, lead- and chromate-free, universal modified-alkyd primer complying with MPI#79.

1. Use primer with a VOC content of [**420 g/L (3.5 lb/gal.)**] <**Insert VOC limit**> or less when calculated according to 40 CFR 59, Subpart D (EPA Method 24).
2. Use primer containing pigments that make it easily distinguishable from zinc-rich primer.

D. Zinc-Rich Primer: Complying with SSPC-Paint 20 or SSPC-Paint 29 and compatible with topcoat.

1. Use primer with a VOC content of [**420 g/L (3.5 lb/gal.)**] <**Insert VOC limit**> or less when calculated according to 40 CFR 59, Subpart D (EPA Method 24).
2. [**Available**]Products:

a. Carboline Company; Carbozinc 621.
b. ICI Devoe Coatings; Catha-Coat 313.
c. International Coatings Limited; Interzinc 315 Epoxy Zinc-Rich Primer.
d. Moore, Benjamin, & Co.; Epoxy Zinc-Rich Primer CM18/19.
e. PPG Architectural Finishes, Inc.; Aquapon Zinc-Rich Primer 97-670.
f. Sherwin-Williams Company (The); Corothane I GalvaPac Zinc Primer.
g. Tnemec Company, Inc.; Tneme-Zinc 90-97.
h. <**Insert manufacturer's name; product name or designation.**>

E. Galvanizing Repair Paint: High-zinc-dust-content paint for regalvanizing welds in steel, complying with SSPC-Paint 20.

F. Bituminous Paint: Cold-applied asphalt emulsion complying with ASTM D 1187.

G. Nonshrink, Nonmetallic Grout: Factory-packaged, nonstaining, noncorrosive, nongaseous grout complying with ASTM C 1107. Provide grout specifically recommended by manufacturer for interior and exterior applications.

H. Concrete Materials and Properties: Comply with requirements in Division 3 Section "Cast-in-Place Concrete" for normal-weight, air-entrained, ready-mix concrete with a minimum 28-day compressive strength of 3000 psi (20 MPa), unless otherwise indicated.

I. Nonslip-Aggregate Concrete Finish: Factory-packaged abrasive aggregate made from fused, aluminum-oxide grits or crushed emery; rustproof and nonglazing; unaffected by freezing, moisture, or cleaning materials.

J. Welded Wire Fabric: ASTM A 185, 6 by 6 inches (152 by 152 mm)--W1.4 by W1.4, unless otherwise indicated.

2.8 PRECAST CONCRETE TREADS

A. Concrete Materials and Properties: Comply with requirements in Division 3 Section "Cast-in-Place Concrete" for normal-weight, ready-mixed concrete with a minimum 28-day compressive strength of 5000 psi (35 MPa) and a total air content of not less than 4 percent or more than 6 percent.

B. Reinforcing Wire Fabric: Galvanized, welded wire fabric, 2 by 2 inches (50 by 50 mm) by 0.062-inch- (1.6-mm-) diameter wire; comply with ASTM A 185 and ASTM A 82, except for minimum wire size.

2.9 FABRICATION, GENERAL

A. Provide complete stair assemblies, including metal framing, hangers, struts,[**railings,**] clips, brackets, bearing plates, and other components necessary to support and anchor stairs and platforms on supporting structure.

1. Join components by welding, unless otherwise indicated.
2. Use connections that maintain structural value of joined pieces.
3. Fabricate treads and platforms of exterior stairs so finished walking surfaces slope to drain.

B. Preassembled Stairs: Assemble stairs in shop to greatest extent possible. Disassemble units only as necessary for shipping and handling limitations. Clearly mark units for reassembly and coordinated installation.

C. Cut, drill, and punch metals cleanly and accurately. Remove burrs and ease edges to a radius of approximately 1/32 inch (1 mm), unless otherwise indicated. Remove sharp or rough areas on exposed surfaces.

D. Form bent-metal corners to smallest radius possible without causing grain separation or otherwise impairing work.

E. Form exposed work true to line and level with accurate angles and surfaces and straight edges.

F. Weld connections to comply with the following:

1. Use materials and methods that minimize distortion and develop strength and corrosion resistance of base metals.
2. Obtain fusion without undercut or overlap.
3. Remove welding flux immediately.
4. Weld exposed corners and seams continuously, unless otherwise indicated.
5. At exposed connections, finish exposed welds and surfaces smooth and blended so no roughness shows after finishing and contour of welded surface matches that of adjacent surface.

G. Form exposed connections with hairline joints, flush and smooth, using concealed fasteners where possible. Where exposed fasteners are required, use Phillips flat-head (countersunk) screws or bolts unless otherwise indicated. Locate joints where least conspicuous.

H. Fabricate joints that will be exposed to weather in a manner to exclude water. Provide weep holes where water may accumulate.

2.10 STEEL-FRAMED STAIRS

A. [**Available**]Manufacturers:

1. Alfab, Inc.
2. American Stair, Inc.
3. Sharon Companies Ltd. (The).
4. <**Insert manufacturer's name.**>

B. Stair Framing:

1. Fabricate stringers of steel [**plates**] [**channels**] [**plates or channels**] [**tubes**].

    a. Provide closures for exposed ends of [**channel**] [**tube**] stringers.

2. Construct platforms of steel [**plate**] [**channel**] [**plate or channel**] [**tube**] headers and miscellaneous framing members as [**needed to comply with performance requirements**] [**indicated**].
3. Weld[**or bolt**] stringers to headers; weld[**or bolt**] framing members to stringers and headers.[**If using bolts, fabricate and join so bolts are not exposed on finished surfaces.**]
4. Where stairs are enclosed by gypsum board[**shaft-wall**] assemblies, provide hanger rods or struts to support landings from floor construction above or below. Locate hanger rods and struts where they will not encroach on required stair width and will be within the fire-resistance-rated stair enclosure.
5. Where masonry walls support metal stairs, provide temporary supporting struts designed for erecting steel stair components before installing masonry.

C. Metal-Pan Stairs: Form risers, subtread pans, and subplatforms to configurations shown from steel sheet of thickness [**needed to comply with performance requirements but not less than 0.0677 inch (1.7 mm)**] [**indicated**].

1. Steel Sheet: Uncoated [**cold**] [**hot**]-rolled steel sheet[**, unless otherwise indicated**].
2. Steel Sheet: Galvanized steel sheet[**, where indicated**].
3. Directly weld metal pans to stringers; locate welds on top of subtreads where they will be concealed by concrete fill. Do not weld risers to stringers.
4. Attach risers and subtreads to stringers with brackets made of steel angles or bars. Weld brackets to stringers and attach metal pans to brackets by welding, riveting, or bolting.
5. Shape metal pans to include nosing integral with riser.
6. Attach abrasive nosings to risers.
7. At Contractor's option, provide stair assemblies with metal-pan subtreads filled with reinforced concrete during fabrication.
8. Provide epoxy-resin-filled treads, reinforced with glass fibers, with slip-resistant, abrasive surface.
9. Provide subplatforms of configuration indicated or, if not indicated, the same as subtreads. Weld subplatforms to platform framing.

    a. Smooth Soffit Construction: Construct subplatforms with smooth soffits.

D. Abrasive-Coating-Finished, Formed-Metal Stairs: Form risers, treads, and platforms to configurations shown from steel sheet of thickness [**needed to comply with performance requirements but not less than 0.0966 inch (2.5 mm)**] [**indicated**].

1. Steel Sheet: Uncoated hot-rolled steel sheet, unless otherwise indicated.
2. Directly weld risers and treads to stringers; locate welds on underside of stairs.
3. Provide platforms of configuration indicated or, if not indicated, the same as treads. Weld platforms to platform framing.
4. Finish tread and platform surfaces with manufacturer's standard epoxy-bonded abrasive finish.

E. Metal Floor Plate Stairs: Form treads and platforms to configurations shown from [**rolled-steel**] [**abrasive-surface**] floor plate of thickness [**needed to comply with performance requirements but not less than 1/4 inch (6.4 mm)**] [**needed to comply with performance requirements but not less than 3/16 inch (4.8 mm)**] [**needed to comply with performance requirements but not less than 1/8 inch (3.2 mm)**] [**indicated**].

1. Form treads with integral nosing and back edge stiffener. Form risers of same material as treads.
2. Form treads with integral nosing and back edge stiffener. Form risers from steel sheet not less than 0.0966 inch (2.5 mm) thick, welded to tread nosings and stiffeners and to platforms.
3. Form treads with integral nosing and back edge stiffener, and with open risers.
4. Weld steel supporting brackets to stringers and weld treads to brackets.
5. Fabricate platforms with integral nosings matching treads and weld to platform framing.

F. Metal Bar-Grating Stairs: Form treads and platforms to configurations shown from metal bar grating; fabricate to comply with NAAMM MBG 531, "Metal Bar Grating Manual."

1. Fabricate treads and platforms from welded steel grating with 1-1/4-by-3/16-inch (32-by-5-mm) bearing bars at 15/16 inch (24 mm) o.c. and crossbars at 4 inches (100 mm) o.c., NAAMM designation: W-15-4 (1-1/4 x 3/16) STEEL.
2. Fabricate treads and platforms from pressure-locked steel grating with 1-by-3/16-inch (25-by-5-mm) bearing bars at 11/16 inch (17 mm) o.c. and crossbars at 4 inches (100 mm) o.c., NAAMM designation: P-11-4 (1 x 3/16) STEEL.
3. Surface: [**Plain**] [**Serrated**].
4. Finish: [**Shop primed**] [**Painted**] [**Galvanized**].
5. Fabricate grating treads with [**rolled-steel floor plate**] [**cast abrasive**] nosing and with steel angle or steel plate carrier at each end for stringer connections. Secure treads to stringers with bolts.
6. Fabricate grating platforms with nosing matching that on grating treads. Provide toeplates at open-sided edges of grating platforms. Weld grating to platform framing.

2.11 STEEL TUBE RAILINGS

A. General: Fabricate railings to comply with requirements indicated for design, dimensions, details, finish, and member sizes, including wall thickness of tube, post spacings, and anchorage, but not less than that needed to withstand indicated loads.

1. Configuration: [**1-5/8-inch- (41-mm-) diameter**] [**1-1/2-inch- (38-mm-) square**] top and bottom rails, 1-1/2-inch- (38-mm-) square posts, and 1/2-inch- (13-mm-) square pickets spaced less than 4 inches (100 mm) clear.
2. Configuration: 1-1/2-inch- (38-mm-) square top and bottom rails and posts with infill panels made from expanded metal.

    a. Edge panels with U-shaped channels made from steel sheet not less than 0.0428 inch (1.1 mm) thick.
    b. Orient expanded metal with long dimension of diamonds [**parallel to top rail**] [**perpendicular to top rail**] [**vertical**].

3. Configuration: 1-1/2-inch- (38-mm-) square top and bottom rails and posts with infill panels made from woven wire mesh crimped into 1-by-1/2-by-1/8-inch (25-by-13-by-3-mm) steel channel frames.

    a. Orient wire mesh with [**diamonds vertical**] [**wires perpendicular and parallel to top rail**] [**wires horizontal and vertical**].

4. Configuration: 1-1/2-inch- (38-mm-) square top, bottom, and intermediate rails and posts. Space intermediate rails less than [**12 inches (305 mm)**] [**21 inches (533 mm)**] clear.
5. Configuration: 1-5/8-inch- (41-mm-) diameter top, bottom, and intermediate rails and 1-1/2-inch- (38-mm-) square posts. Space intermediate rails less than [**12 inches (305 mm)**] [**21 inches (533 mm)**] clear.
6. Gates: Form gates from steel tube of same size and shape as top rails, with infill to match guards. Provide with [**cam-type self-closing**] [**spring**] hinges for fastening to wall and overlapping stop with rubber bumper to prevent gate from opening in direction opposite egress.

B. Welded Connections: Fabricate railings with welded connections. Cope components at connections to provide close fit, or use fittings designed for this purpose. Weld all around at connections, including at fittings.

C. Form changes in direction of railings as follows:

1. As detailed.
2. By bending[**or by inserting prefabricated elbow fittings**].
3. By flush bends[**or by inserting prefabricated flush-elbow fittings**].
4. By radius bends of radius indicated[**or by inserting prefabricated elbow fittings of radius indicated**].
5. By inserting prefabricated [**elbow fittings**] [**flush-elbow fittings**] [**elbow fittings of radius indicated**].

D. Form simple and compound curves by bending members in jigs to produce uniform curvature for each repetitive configuration required; maintain cross section of member throughout entire bend without buckling, twisting, cracking, or otherwise deforming exposed surfaces of components.

E. Close exposed ends of railing members with prefabricated end fittings.

F. Provide wall returns at ends of wall-mounted handrails, unless otherwise indicated. Close ends of returns unless clearance between end of rail and wall is 1/4 inch (6 mm) or less.

G. Brackets, Flanges, Fittings, and Anchors: Provide wall brackets, end closures, flanges, miscellaneous fittings, and anchors for interconnecting components and for attaching to other work. Furnish inserts and other anchorage devices for connecting to concrete or masonry work.

1. Connect posts to stair framing by direct welding, unless otherwise indicated.
2. For galvanized railings, provide galvanized fittings, brackets, fasteners, sleeves, and other ferrous-metal components.

3. For nongalvanized railings, provide nongalvanized ferrous-metal fittings, brackets, fasteners, and sleeves, except galvanize anchors embedded in exterior masonry and concrete construction.

H. Fillers: Provide fillers made from steel plate, or other suitably crush-resistant material, where needed to transfer wall bracket loads through wall finishes to structural supports. Size fillers to suit wall finish thicknesses and to produce adequate bearing area to prevent bracket rotation and overstressing of substrate.

2.12 STAIR RAILINGS

A. Comply with applicable requirements in Division 5 Section "[**Pipe and Tube Railings**] [**Ornamental Railings**]" for railings, and as follows:

1. Fabricate newels of square steel tubing and provide newel caps of [**pressed steel**] [**gray-iron castings**], as shown.
2. Rails may be bent at corners, rail returns, and wall returns, instead of using prefabricated fittings.
3. Connect posts to stair framing by direct welding, unless otherwise indicated.

2.13 FINISHES

A. Comply with NAAMM's "Metal Finishes Manual for Architectural and Metal Products" for recommendations for applying and designating finishes.

B. Finish metal stairs after assembly.

C. Galvanizing: Hot-dip galvanize items as indicated to comply with applicable standard listed below:

1. ASTM A 123/A 123M, for galvanizing steel and iron products.
2. ASTM A 153/A 153M, for galvanizing steel and iron hardware.
3. Fill vent and drain holes that will be exposed in finished Work, unless indicated to remain as weep holes, by plugging with zinc solder and filing off smooth.

D. Preparation for Shop Priming: Prepare uncoated ferrous-metal surfaces to comply with minimum requirements indicated below for SSPC surface preparation specifications and environmental exposure conditions of installed products:

1. Exterior Stairs (SSPC Zone 1B): SSPC-SP 6/NACE No. 3, "Commercial Blast Cleaning."
2. Interior Stairs (SSPC Zone 1A): SSPC-SP 3, "Power Tool Cleaning."
3. Interior Stairs [**Indicated to Receive Zinc-Rich Primer**](SSPC Zone 1A): SSPC-SP 6/NACE No. 3, "Commercial Blast Cleaning."

E. Apply shop primer to uncoated surfaces of metal stair components, except those with galvanized finishes and those to be embedded in concrete or masonry unless otherwise indicated. Comply with SSPC-PA 1, "Paint Application Specification No. 1: Shop, Field, and Maintenance Painting of Steel," for shop painting.

1. Stripe paint corners, crevices, bolts, welds, and sharp edges.

PART 3 - EXECUTION

3.1 INSTALLATION, GENERAL

A. Fastening to In-Place Construction: Provide anchorage devices and fasteners where necessary for securing metal stairs to in-place construction. Include threaded fasteners for concrete and masonry inserts, through-bolts, lag bolts, and other connectors.

B. Cutting, Fitting, and Placement: Perform cutting, drilling, and fitting required for installing metal stairs. Set units accurately in location, alignment, and elevation, measured from established lines and levels and free of rack.

C. Install metal stairs by welding stair framing to steel structure or to weld plates cast into concrete, unless otherwise indicated.

D. Provide temporary bracing or anchors in formwork for items that are to be built into concrete, masonry, or similar construction.

E. Fit exposed connections accurately together to form hairline joints. Weld connections that are not to be left as exposed joints but cannot be shop welded because of shipping size limitations. Do not weld, cut, or abrade surfaces of exterior units that have been hot-dip galvanized after fabrication and are for bolted or screwed field connections.

F. Field Welding: Comply with the following requirements:

1. Use materials and methods that minimize distortion and develop strength and corrosion resistance of base metals.
2. Obtain fusion without undercut or overlap.
3. Remove welding flux immediately.
4. At exposed connections, finish exposed welds and surfaces smooth and blended so no roughness shows after finishing and contour of welded surface matches that of adjacent surface.

G. Place and finish concrete fill for treads and platforms to comply with Division 3 Section "Cast-in-Place Concrete."

1. Install abrasive nosings with anchors fully embedded in concrete. Center nosings on tread width.

H. Install precast concrete treads with adhesive supplied by manufacturer.

3.2 INSTALLING METAL STAIRS WITH GROUTED BASEPLATES

A. Clean concrete and masonry bearing surfaces of bond-reducing materials, and roughen to improve bond to surfaces. Clean bottom surface of baseplates.

B. Set steel stair baseplates on wedges, shims, or leveling nuts. After stairs have been positioned and aligned, tighten anchor bolts. Do not remove wedges or shims but, if protruding, cut off flush with edge of bearing plate before packing with grout.

1. Use nonmetallic, nonshrink grout, unless otherwise indicated.
2. Pack grout solidly between bearing surfaces and plates to ensure that no voids remain.

3.3 INSTALLING STEEL TUBE RAILINGS

A. Adjust railing systems before anchoring to ensure matching alignment at abutting joints. Space posts at spacing indicated or, if not indicated, as required by design loads. Plumb posts in each direction. Secure posts and rail ends to building construction as follows:

1. Anchor posts to steel by welding directly to steel supporting members.
2. Anchor handrail ends to concrete and masonry with steel round flanges welded to rail ends and anchored with postinstalled anchors and bolts.

B. Attach handrails to wall with wall brackets. Provide bracket with 1-1/2-inch (38-mm) clearance from inside face of handrail and finished wall surface. Locate brackets as indicated or, if not indicated, at spacing required to support structural loads. Secure wall brackets to building construction as follows:

1. Use type of bracket with flange tapped for concealed anchorage to threaded hanger bolt.
2. Use type of bracket with predrilled hole for exposed bolt anchorage.
3. For concrete and solid masonry anchorage, use drilled-in expansion shields and hanger or lag bolts.
4. For hollow masonry anchorage, use toggle bolts.
5. For wood stud partitions, use hanger or lag bolts set into wood backing between studs. Coordinate with carpentry work to locate backing members.
6. For steel-framed gypsum board assemblies, use hanger or lag bolts set into wood backing between studs. Coordinate with stud installation to locate backing members.
7. For steel-framed gypsum board assemblies, fasten brackets directly to steel framing or concealed steel reinforcements using self-tapping screws of size and type required to support structural loads.

3.4 ADJUSTING AND CLEANING

A. Touchup Painting: Immediately after erection, clean field welds, bolted connections, and abraded areas of shop paint, and paint exposed areas with the same material as used for shop painting to comply with SSPC-PA 1 for touching up shop-painted surfaces.

1. Apply by brush or spray to provide a minimum 2.0-mil (0.05-mm) dry film thickness.

B. Touchup Painting: Cleaning and touchup painting of field welds, bolted connections, and abraded areas of shop paint are specified in Division 9 painting Sections.

C. Galvanized Surfaces: Clean field welds, bolted connections, and abraded areas and repair galvanizing to comply with ASTM A 780.

END OF SECTION 05511

SECTION 05520
HANDRAILS AND RAILINGS

1- RELATED DOCUMENTS:

The general provisions of the Contract, including General and Special Conditions, apply to the work specified in this section.

2- DESCRIPTION OF WORK:

The extent of handrails and railing is shown on the drawings.

3- MATERIALS:

See architectural drawings for Specifications.

4- FABRICATION:

Welded Connections: Cope intersections of rails and posts, excepts where otherwise shown on drawings, weld joints and grind smooth.

Brackets, Flanges and Anchors: Provide galvanized cast metal brackets, flanges and anchors for handrails supports. Furnish inserts as required for anchorage to concrete.

5- INSTALLATION

Cutting, Fitting and Placement:

Perform cutting, drilling and fitting required for installation. Set the work accurately in location, alignment and elevation, plumb, level, true and free of rack, measured from established lines and levels.

Use welding connectors to join sections of railings. Grind joints smooth.

Adjust railing prior to securing in place to ensure proper matching at butting joints and correct alignment throughout their length. Plumb posts in each direction. Secure posts and rail ends to building construction as shown on drawings.

Secure handrails to walls with wall brackets. Locate brackets at not more than 6’ – 0” o.c. use anchorage to secure wall brackets to building construction as follows:

For concrete anchorage, use bolt anchor expansion shields and lag bolts.

For hollow masonry anchorage, use toggle bolts having square heads.

6- OMITTED

7- SUBMITTALS:

Shop Drawings:

Submit shop drawings for the fabrication and erection of handrails and railings. Show anchorage and accessory items. Do not start fabrication until shop drawings are approved in writing.

END OF SECTION

SECTION 05521 - PIPE AND TUBE RAILINGS

PART 1 - GENERAL

1.1 RELATED DOCUMENTS

A. Drawings and general provisions of the Contract, including General and Supplementary Conditions and Division 1 Specification Sections, apply to this Section.

1.2 SUMMARY

A. This Section includes the following:

1. Aluminum [**pipe**] [**and**] [**tube**] railings.
2. Stainless-steel [**pipe**] [**and**] [**tube**] railings.
3. Steel [**pipe**] [**and**] [**tube**] railings.

B. Related Sections include the following:

1. Division 5 Section "Metal Stairs" for steel tube railings associated with metal stairs.
2. Division 5 Section "Ornamental Railings" for ornamental railings fabricated from pipes and tubes.
3. Division 6 Section "[**Rough Carpentry**] [**Miscellaneous Carpentry**]" for wood blocking for anchoring railings.
4. Division 9 Section "[**Gypsum Plaster**] [**Gypsum Veneer Plaster**] [**Gypsum Board Assemblies**] [**Gypsum Board Shaft-Wall Assemblies**]" for metal backing for anchoring railings.
5. Division 10 Section "Access Flooring" for railings included with access flooring.

1.3 PERFORMANCE REQUIREMENTS

A. General: In engineering railings to withstand structural loads indicated, determine allowable design working stresses of railing materials based on the following:

1. Aluminum: The lesser of minimum yield strength divided by 1.65 or minimum ultimate tensile strength divided by 1.95.
2. Stainless Steel: 60 percent of minimum yield strength.
3. Steel: 72 percent of minimum yield strength.

B. Structural Performance: Provide railings capable of withstanding the effects of gravity loads and the following loads and stresses within limits and under conditions indicated:

1. Handrails:

a. Uniform load of 50 lbf/ ft. (0.73 kN/m) applied in any direction.
b. Concentrated load of 200 lbf (0.89 kN) applied in any direction.
c. Uniform and concentrated loads need not be assumed to act concurrently.

2. Top Rails of Guards:

    a. Uniform load of [**50 lbf/ ft. (0.73 kN/m) applied in any direction**] [**50 lbf/ ft. (0.73 kN/m) applied horizontally and concurrently with 100 lbf/ ft. (1.46 kN/m) applied vertically downward**].
    b. Concentrated load of 200 lbf (0.89 kN) applied in any direction.
    c. Uniform and concentrated loads need not be assumed to act concurrently.

3. Infill of Guards:

    a. Concentrated load of [**50 lbf (0.22 kN)**] [**200 lbf (0.89 kN)**] applied horizontally on an area of 1 sq. ft. (0.093 sq. m).
    b. Uniform load of 25 lbf/sq. ft. (1.2 kN/sq. m) applied horizontally.
    c. Infill load and other loads need not be assumed to act concurrently.

C. Thermal Movements: Provide exterior railings that allow for thermal movements resulting from the following maximum change (range) in ambient and surface temperatures by preventing buckling, opening of joints, overstressing of components, failure of connections, and other detrimental effects. Base engineering calculation on surface temperatures of materials due to both solar heat gain and nighttime-sky heat loss.

1. Temperature Change (Range): 120 deg F (67 deg C), ambient; 180 deg F (100 deg C), material surfaces.

D. Control of Corrosion: Prevent galvanic action and other forms of corrosion by insulating metals and other materials from direct contact with incompatible materials.

1.4 SUBMITTALS

A. Product Data: For the following:

1. Manufacturer's product lines of mechanically connected railings.
2. Grout, anchoring cement, and paint products.

B. Shop Drawings: Include plans, elevations, sections, details, and attachments to other work.

1. For installed products indicated to comply with design loads, include structural analysis data signed and sealed by the qualified professional engineer responsible for their preparation.

C. Samples for Initial Selection: For products involving selection of color, texture, or design[**, including mechanical finishes on stainless steel**].

D. Samples for Verification: For each type of exposed finish required.

1. Sections of each distinctly different linear railing member, including handrails, top rails, posts, and balusters.
2. Fittings and brackets.
3. Assembled Sample of railing system, made from full-size components, including top rail, post, handrail, and infill. Sample need not be full height.

a. Show method of [**finishing**] [**connecting**] members at intersections.

E. Mill Certificates: Signed by manufacturers of stainless-steel products certifying that products furnished comply with requirements.

F. Welding certificates.

G. Qualification Data: For [**professional engineer**] [**testing agency**].

H. Product Test Reports: Based on evaluation of comprehensive tests performed by a qualified testing agency, according to ASTM E 894 and ASTM E 935.

1.5 QUALITY ASSURANCE

A. Source Limitations: Obtain each type of railing through one source from a single manufacturer.

B. Welding: Qualify procedures and personnel according to the following:

1. AWS D1.1, "Structural Welding Code--Steel."
2. AWS D1.2, "Structural Welding Code--Aluminum."
3. AWS D1.6, "Structural Welding Code--Stainless Steel."

1.6 PROJECT CONDITIONS

A. Field Measurements: Verify actual locations of walls and other construction contiguous with railings by field measurements before fabrication and indicate measurements on Shop Drawings.

1. Established Dimensions: Where field measurements cannot be made without delaying the Work, establish dimensions and proceed with fabricating railings without field measurements. Coordinate wall and other contiguous construction to ensure that actual dimensions correspond to established dimensions.
2. Provide allowance for trimming and fitting at site.

1.7 COORDINATION AND SCHEDULING

A. Coordinate installation of anchorages for railings. Furnish setting drawings, templates, and directions for installing anchorages, including sleeves, concrete inserts, anchor bolts, and items with integral anchors, that are to be embedded in concrete or masonry. Deliver such items to Project site in time for installation.

B. Schedule installation so wall attachments are made only to completed walls. Do not support railings temporarily by any means that do not satisfy structural performance requirements.

PART 2 - PRODUCTS

2.1 MANUFACTURERS

A. Available Manufacturers: Subject to compliance with requirements, manufacturers offering products that may be incorporated into the Work include, but are not limited to, the following:

B. Manufacturers: Subject to compliance with requirements, provide products by one of the following:

1. Aluminum Pipe and Tube Railings:

a. AlumaGuard Corp.
b. ATR Technologies, Inc.
c. Blum, Julius & Co., Inc.
d. Braun, J. G., Company; a division of the Wagner Companies.
e. CraneVeyor Corp.
f. Hollaender Manufacturing Company.
g. Moultrie Manufacturing Company.
h. Pisor Industries, Inc.
i. Sterling Dula Architectural Products, Inc.
j. Superior Aluminum Products, Inc.
k. Thompson Fabricating, LLC.
l. Tubular Specialties Manufacturing, Inc.
m. Tuttle Aluminum & Bronze.
n. Wagner, R & B, Inc.; a division of the Wagner Companies.
o. <**Insert manufacturer's name.**>

2. Stainless-Steel Pipe and Tube Railings:

a. Blum, Julius & Co., Inc.
b. Paragon Aquatics; Division of Pentair Pool Products, Inc.
c. Pisor Industries, Inc.
d. Stainless Fabricators, Inc.
e. Sterling Dula Architectural Products, Inc.
f. Tubular Specialties Manufacturing, Inc.
g. Tuttle Aluminum & Bronze.
h. Wagner, R & B, Inc.; a division of the Wagner Companies.
i. <**Insert manufacturer's name.**>

3. Steel Pipe and Tube Railings:

a. Pisor Industries, Inc.
b. Sharpe Products.
c. Wagner, R & B, Inc.; a division of the Wagner Companies.
d. <**Insert manufacturer's name.**>

2.2 METALS, GENERAL

A. Metal Surfaces, General: Provide materials with smooth surfaces, without seam marks, roller marks, rolled trade names, stains, discolorations, or blemishes.

B. Brackets, Flanges, and Anchors: Cast or formed metal of same type of material and finish as supported rails, unless otherwise indicated.

2.3 ALUMINUM

A. Aluminum, General: Provide alloy and temper recommended by aluminum producer and finisher for type of use and finish indicated, and with not less than the strength and durability properties of alloy and temper designated below for each aluminum form required.

B. Extruded [**Bars**] [**and**] [**Tubing**]: ASTM B 221 (ASTM B 221M), Alloy 6063-T5/T52.

C. Extruded Structural [**Pipe**] [**and**] [**Round Tubing**]: ASTM B 429, Alloy 6063-T6.

1. Provide Standard Weight (Schedule 40) pipe, unless otherwise indicated.

D. Drawn Seamless Tubing: ASTM B 210 (ASTM B 210M), Alloy 6063-T832.

E. Plate and Sheet: ASTM B 209 (ASTM B 209M), Alloy 6061-T6.

F. Die and Hand Forgings: ASTM B 247 (ASTM B 247M), Alloy 6061-T6.

G. Castings: ASTM B 26/B 26M, Alloy A356.0-T6.

H. Woven-Wire Mesh: Intermediate-crimp, [**diamond**] [**square**] pattern, 2-inch (50-mm) woven-wire mesh, made from 0.162-inch (4.1-mm) nominal diameter wire complying with ASTM B 211 (ASTM B 211M), Alloy 6061-T94.

2.4 STAINLESS STEEL

A. Tubing: ASTM A 554, Grade MT [**304**] [**316L**].

B. Pipe: ASTM A 312/A 312M, Grade TP [**304**] [**316L**].

C. Castings: ASTM A 743/A 743M, Grade [**CF 8 or CF 20**] [**CF 8M or CF 3M**].

D. Plate and Sheet: ASTM A 666, Type [**304**] [**316L**].

E. Expanded Metal: ASTM F 1267, Type [**I (expanded)**] [**II (expanded and flattened)**], Class 3 (corrosion-resistant steel), made from stainless-steel sheet complying with ASTM A 666, Type [**304**] [**316**].

1. Style Designation: [**3/4 number 13**] [**1-1/2 number 10**] <**Insert designation**>.

F. Woven-Wire Mesh: Intermediate-crimp, [**diamond**] [**square**] pattern, 2-inch (50-mm) woven-wire mesh, made from 0.135-inch (3.5-mm) nominal diameter wire complying with ASTM A 580/A 580M, Type [**304**] [**316**].

2.5 STEEL AND IRON

A. Tubing: [**ASTM A 500 (cold formed)**] [**or**] [**ASTM A 513, Type 5 (mandrel drawn)**].

B. Pipe: ASTM A 53/A 53M, Type F or Type S, Grade A, Standard Weight (Schedule 40), unless another grade and weight are required by structural loads.

1. Provide galvanized finish for exterior installations and where indicated.

C. Plates, Shapes, and Bars: ASTM A 36/A 36M.

D. Castings: Either gray or malleable iron, unless otherwise indicated.

1. Gray Iron: ASTM A 48/A 48M, Class 30, unless another class is indicated or required by structural loads.
2. Malleable Iron: ASTM A 47/A 47M.

E. Expanded Metal: ASTM F 1267, Type [**I (expanded)**] [**II (expanded and flattened)**], Class 1 (uncoated).

1. Style Designation: [**3/4 number 13**] [**1-1/2 number 10**] <**Insert designation**>.

F. Woven-Wire Mesh: Intermediate-crimp, [**diamond**] [**square**] pattern, 2-inch (50-mm) woven-wire mesh, made from 0.135-inch (3.5-mm) nominal diameter wire complying with ASTM A 510 (ASTM A 510M).

2.6 FASTENERS

A. General: Provide the following:

1. Aluminum Railings: Type [**304**] [**316**] stainless-steel fasteners.
2. Stainless-Steel Railings: Type [**304**] [**316**] stainless-steel fasteners.
3. Steel Railings: Plated steel fasteners complying with ASTM B 633, Class Fe/Zn 25 for electrodeposited zinc coating.

B. Fasteners for Anchoring Railings to Other Construction: Select fasteners of type, grade, and class required to produce connections suitable for anchoring railings to other types of construction indicated[**and capable of withstanding design loads**].

C. Fasteners for Interconnecting Railing Components:

1. Provide concealed fasteners for interconnecting railing components and for attaching them to other work, unless otherwise indicated.
2. Provide concealed fasteners for interconnecting railing components and for attaching them to other work, unless exposed fasteners are unavoidable or are the standard fastening method for railings indicated.

3. Provide [**Phillips**] [**tamper-resistant**] [**square or hex socket**] flat-head machine screws for exposed fasteners, unless otherwise indicated.

D. Anchors: Provide [**cast-in-place**] [**chemical**] [**or**] [**torque-controlled expansion**] anchors, fabricated from corrosion-resistant materials with capability to sustain, without failure, a load equal to six times the load imposed when installed in unit masonry and equal to four times the load imposed when installed in concrete, as determined by testing per ASTM E 488 conducted by a qualified independent testing agency.

2.7 MISCELLANEOUS MATERIALS

A. Welding Rods and Bare Electrodes: Select according to AWS specifications for metal alloy welded.

1. For aluminum railings, provide type and alloy as recommended by producer of metal to be welded and as required for color match, strength, and compatibility in fabricated items.

B. Shop Primers: Provide primers that comply with Division 9 [**painting Sections.**] [**Section "High-Performance Coatings."**]

C. Universal Shop Primer: Fast-curing, lead- and chromate-free, universal modified-alkyd primer complying with MPI#79.

1. Use primer with a VOC content of [**420 g/L (3.5 lb/gal.)**] <**Insert VOC limit**> or less when calculated according to 40 CFR 59, Subpart D (EPA Method 24).
2. Use primer containing pigments that make it easily distinguishable from zinc-rich primer.

D. Zinc-Rich Primer: Complying with SSPC-Paint 20 or SSPC-Paint 29 and compatible with topcoat.

1. Use primer with a VOC content of [**420 g/L (3.5 lb/gal.)**] <**Insert VOC limit**> or less when calculated according to 40 CFR 59, Subpart D (EPA Method 24).
2. Available Products: Subject to compliance with requirements, products that may be incorporated into the Work include, but are not limited to, the following:
3. Products: Subject to compliance with requirements, provide one of the following:

    a. Benjamin Moore & Co.; Epoxy Zinc-Rich Primer CM18/19.
    b. Carboline Company; Carbozinc 621.
    c. ICI Devoe Coatings; Catha-Coat 313.
    d. International Coatings Limited; Interzinc 315 Epoxy Zinc-Rich Primer.
    e. PPG Architectural Finishes, Inc.; Aquapon Zinc-Rich Primer 97-670.
    f. Sherwin-Williams Company (The); Corothane I GalvaPac Zinc Primer.
    g. Tnemec Company, Inc.; Tneme-Zinc 90-97.
    h. <**Insert manufacturer's name; product name or designation.**>

E. Shop Primer for Galvanized Steel: Zinc-dust, zinc-oxide primer formulated for priming zinc-coated steel and for compatibility with finish paint systems indicated, and complying with SSPC-Paint 5.

F. Galvanizing Repair Paint: High-zinc-dust-content paint for regalvanizing welds in steel, complying with SSPC-Paint 20.

G. Bituminous Paint: Cold-applied asphalt emulsion complying with ASTM D 1187.

H. Nonshrink, Nonmetallic Grout: Factory-packaged, nonstaining, noncorrosive, nongaseous grout complying with ASTM C 1107. Provide grout specifically recommended by manufacturer for interior and exterior applications.

I. Anchoring Cement: Factory-packaged, nonshrink, nonstaining, hydraulic-controlled expansion cement formulation for mixing with water at Project site to create pourable anchoring, patching, and grouting compound.

1. Water-Resistant Product: [**At exterior locations**] [**and**] [**where indicated**] provide formulation that is resistant to erosion from water exposure without needing protection by a sealer or waterproof coating and that is recommended by manufacturer for exterior use.

2.8 FABRICATION

A. General: Fabricate railings to comply with requirements indicated for design, dimensions, member sizes and spacing, details, finish, and anchorage[**, but not less than that required to support structural loads**].

B. Assemble railings in the shop to greatest extent possible to minimize field splicing and assembly. Disassemble units only as necessary for shipping and handling limitations. Clearly mark units for reassembly and coordinated installation. Use connections that maintain structural value of joined pieces.

C. Cut, drill, and punch metals cleanly and accurately. Remove burrs and ease edges to a radius of approximately 1/32 inch (1 mm), unless otherwise indicated. Remove sharp or rough areas on exposed surfaces.

D. Form work true to line and level with accurate angles and surfaces.

E. Fabricate connections that will be exposed to weather in a manner to exclude water. Provide weep holes where water may accumulate.

F. Cut, reinforce, drill, and tap as indicated to receive finish hardware, screws, and similar items.

G. Connections: Fabricate railings with [**welded**] [**nonwelded**] [**either welded or nonwelded**] connections, unless otherwise indicated.

H. Welded Connections: Cope components at connections to provide close fit, or use fittings designed for this purpose. Weld all around at connections, including at fittings.

1. Use materials and methods that minimize distortion and develop strength and corrosion resistance of base metals.
2. Obtain fusion without undercut or overlap.
3. Remove flux immediately.

4. At exposed connections, finish exposed surfaces smooth and blended so no roughness shows after finishing and welded surface matches contours of adjoining surfaces.

I. Welded Connections for Aluminum Pipe: Fabricate railings to interconnect members with concealed internal welds that eliminate surface grinding, using manufacturer's standard system of sleeve and socket fittings.

J. Nonwelded Connections: Connect members with concealed mechanical fasteners and fittings. Fabricate members and fittings to produce flush, smooth, rigid, hairline joints.

1. Fabricate splice joints for field connection using an epoxy structural adhesive if this is manufacturer's standard splicing method.

K. Form changes in direction as follows:

1. As detailed.
2. By bending[**or by inserting prefabricated elbow fittings**].
3. By flush bends[**or by inserting prefabricated flush-elbow fittings**].
4. By radius bends of radius indicated[**or by inserting prefabricated elbow fittings of radius indicated**].
5. By inserting prefabricated [**elbow fittings**] [**flush-elbow fittings**] [**elbow fittings of radius indicated**].

L. Form simple and compound curves by bending members in jigs to produce uniform curvature for each repetitive configuration required; maintain cross section of member throughout entire bend without buckling, twisting, cracking, or otherwise deforming exposed surfaces of components.

M. Close exposed ends of railing members with prefabricated end fittings.

N. Provide wall returns at ends of wall-mounted handrails, unless otherwise indicated. Close ends of returns unless clearance between end of rail and wall is 1/4 inch (6 mm) or less.

O. Brackets, Flanges, Fittings, and Anchors: Provide wall brackets, flanges, miscellaneous fittings, and anchors to interconnect railing members to other work, unless otherwise indicated.

1. At brackets and fittings fastened to plaster or gypsum board partitions, provide fillers made from crush-resistant material, or other means to transfer wall loads through wall finishes to structural supports and prevent bracket or fitting rotation and crushing of substrate.

P. Provide inserts and other anchorage devices for connecting railings to concrete or masonry work. Fabricate anchorage devices capable of withstanding loads imposed by railings. Coordinate anchorage devices with supporting structure.

Q. For railing posts set in concrete, provide steel sleeves not less than 6 inches (150 mm) long with inside dimensions not less than 1/2 inch (13 mm) greater than outside dimensions of post, with steel plate forming bottom closure.

R. For removable railing posts, fabricate slip-fit sockets from [**steel**] [**stainless-steel**] tube or pipe whose ID is sized for a close fit with posts; limit movement of post without lateral load,

measured at top, to not more than one-fortieth of post height. Provide socket covers designed and fabricated to resist being dislodged.

1. Provide chain with eye, snap hook, and staple across gaps formed by removable railing sections at locations indicated. Fabricate from same metal as railings.

S. Expanded-Metal Infill Panels: Fabricate infill panels from expanded metal made from same metal as railings in which they are installed.

1. Edge panels with U-shaped channels made from metal sheet, of same metal as expanded metal and not less than 0.0428 inch (1.1 mm) thick.
2. Orient expanded metal with long dimension of diamonds [**parallel to top rail**] [**perpendicular to top rail**] [**horizontal**] [**vertical**].

T. Woven-Wire Mesh Infill Panels: Fabricate infill panels from woven-wire mesh crimped into 1-by-1/2-by-1/8-inch (25-by-13-by-3-mm) metal channel frames. Make wire mesh and frames from same metal as railings in which they are installed.

1. Orient wire mesh with [**diamonds vertical**] [**wires perpendicular and parallel to top rail**] [**wires horizontal and vertical**].

U. Toe Boards: Where indicated, provide toe boards at railings around openings and at edge of open-sided floors and platforms. Fabricate to dimensions and details indicated.

2.9 FINISHES, GENERAL

A. Comply with NAAMM's "Metal Finishes Manual for Architectural and Metal Products" for recommendations for applying and designating finishes.

B. Protect mechanical finishes on exposed surfaces from damage by applying a strippable, temporary protective covering before shipping.

C. Appearance of Finished Work: Variations in appearance of abutting or adjacent pieces are acceptable if they are within one-half of the range of approved Samples. Noticeable variations in the same piece are not acceptable. Variations in appearance of other components are acceptable if they are within the range of approved Samples and are assembled or installed to minimize contrast.

D. Provide exposed fasteners with finish matching appearance, including color and texture, of railings.

2.10 ALUMINUM FINISHES

A. Finish designations prefixed by AA comply with the system established by the Aluminum Association for designating aluminum finishes.

B. Mechanical Finish: AA-M12 (Mechanical Finish: nonspecular as fabricated).

C. Class II, Clear Anodic Finish: AA-M12C22A31 (Mechanical Finish: nonspecular as fabricated; Chemical Finish: etched, medium matte; Anodic Coating: Architectural Class II, clear coating 0.010 mm or thicker) complying with AAMA 611.

D. Class I, Clear Anodic Finish: AA-M12C22A41 (Mechanical Finish: nonspecular as fabricated; Chemical Finish: etched, medium matte; Anodic Coating: Architectural Class I, clear coating 0.018 mm or thicker) complying with AAMA 611.

E. Class I, Color Anodic Finish: AA-M12C22A42/A44 (Mechanical Finish: nonspecular as fabricated; Chemical Finish: etched, medium matte; Anodic Coating: Architectural Class I, integrally colored or electrolytically deposited color coating 0.018 mm or thicker) complying with AAMA 611.

1. Color: [**Light bronze**] [**Medium bronze**] [**Dark bronze**] [**Black**].
2. Color: [**Match Architect's sample**] [**As selected by Architect from full range of industry colors and color densities**].

F. High-Performance Organic Finish (2-Coat Fluoropolymer): AA-C12C40R1x (Chemical Finish: cleaned with inhibited chemicals; Chemical Finish: conversion coating; Organic Coating: manufacturer's standard 2-coat, thermocured system consisting of specially formulated inhibitive primer and fluoropolymer color topcoat containing not less than 70 percent polyvinylidene fluoride resin by weight). Prepare, pretreat, and apply coating to exposed metal surfaces to comply with [**AAMA 2604**] [**AAMA 2605**] and with coating and resin manufacturers' written instructions.

G. High-Performance Organic Finish (3-Coat Fluoropolymer): AA-C12C40R1x (Chemical Finish: cleaned with inhibited chemicals; Chemical Finish: conversion coatings; Organic Coating: manufacturer's standard 3-coat, thermocured system consisting of specially formulated inhibitive primer, fluoropolymer color coat, and clear fluoropolymer topcoat, with both color coat and clear topcoat containing not less than 70 percent polyvinylidene fluoride resin by weight). Prepare, pretreat, and apply coating to exposed metal surfaces to comply with AAMA 2605 and with coating and resin manufacturers' written instructions.

1. Color and Gloss: [**As indicated by manufacturer's designations**] [**Match Architect's sample**] [**As selected by Architect from manufacturer's full range**].

2.11 STAINLESS-STEEL FINISHES

A. Remove tool and die marks and stretch lines or blend into finish.

B. Grind and polish surfaces to produce uniform, directionally textured, polished finish indicated, free of cross scratches. Run grain with long dimension of each piece.

C. 180-Grit Polished Finish: Oil-ground, uniform, directionally textured finish.

D. 320-Grit Polished Finish: Oil-ground, uniform, fine, directionally textured finish.

E. Polished and Buffed Finish: Oil-ground, 180-grit finish followed by buffing.

F. Directional Satin Finish: No. 4.

G. Dull Satin Finish: No. 6.

H. When polishing is completed, passivate and rinse surfaces. Remove embedded foreign matter and leave surfaces chemically clean.

2.12 STEEL AND IRON FINISHES

A. Galvanized Railings:

1. Hot-dip galvanize[**exterior**] steel and iron railings, including hardware, after fabrication.
2. Hot-dip galvanize indicated steel and iron railings, including hardware, after fabrication.
3. Comply with ASTM A 123/A 123M for hot-dip galvanized railings.
4. Comply with ASTM A 153/A 153M for hot-dip galvanized hardware.

B. Fill vent and drain holes that will be exposed in the finished Work, unless indicated to remain as weep holes, by plugging with zinc solder and filing off smooth.

C. For galvanized railings, provide hot-dip galvanized fittings, brackets, fasteners, sleeves, and other ferrous components.

D. For nongalvanized steel railings, provide nongalvanized ferrous-metal fittings, brackets, fasteners, and sleeves, except galvanize anchors to be embedded in exterior concrete or masonry.

E. Preparation for Shop Priming: After galvanizing, thoroughly clean railings of grease, dirt, oil, flux, and other foreign matter, and treat with metallic-phosphate process.

F. Preparation for Shop Priming: Prepare uncoated ferrous-metal surfaces to comply with minimum requirements indicated below for SSPC surface preparation specifications and environmental exposure conditions of installed railings:

1. Exterior Railings (SSPC Zone 1B): SSPC-SP 6/NACE No. 3, "Commercial Blast Cleaning."
2. Interior Railings (SSPC Zone 1A): SSPC-SP 7/NACE No. 4, "Brush-off Blast Cleaning."
3. Interior Railings [**Indicated to Receive Zinc-Rich Primer**](SSPC Zone 1A): SSPC-SP 6/NACE No. 3, "Commercial Blast Cleaning."

G. Apply shop primer to prepared surfaces of railings, unless otherwise indicated. Comply with requirements in SSPC-PA 1, "Paint Application Specification No. 1: Shop, Field, and Maintenance Painting of Steel," for shop painting. Primer need not be applied to surfaces to be embedded in concrete or masonry.

1. Do not apply primer to galvanized surfaces.
2. Stripe paint corners, crevices, bolts, welds, and sharp edges.

PART 3 - EXECUTION

3.1 EXAMINATION

A. Examine plaster and gypsum board assemblies, where reinforced to receive anchors, to verify that locations of concealed reinforcements have been clearly marked for Installer. Locate reinforcements and mark locations if not already done.

3.2 INSTALLATION, GENERAL

A. Fit exposed connections together to form tight, hairline joints.

B. Perform cutting, drilling, and fitting required for installing railings. Set railings accurately in location, alignment, and elevation; measured from established lines and levels and free of rack.

1. Do not weld, cut, or abrade surfaces of railing components that have been coated or finished after fabrication and that are intended for field connection by mechanical or other means without further cutting or fitting.
2. Set posts plumb within a tolerance of 1/16 inch in 3 feet (2 mm in 1 m).
3. Align rails so variations from level for horizontal members and variations from parallel with rake of steps and ramps for sloping members do not exceed 1/4 inch in 12 feet (5 mm in 3 m).

C. Corrosion Protection: Coat concealed surfaces of aluminum that will be in contact with grout, concrete, masonry, wood, or dissimilar metals, with a heavy coat of bituminous paint.

D. Adjust railings before anchoring to ensure matching alignment at abutting joints.

E. Fastening to In-Place Construction: Use anchorage devices and fasteners where necessary for securing railings and for properly transferring loads to in-place construction.

3.3 RAILING CONNECTIONS

A. Nonwelded Connections: Use mechanical or adhesive joints for permanently connecting railing components. Use wood blocks and padding to prevent damage to railing members and fittings. Seal recessed holes of exposed locking screws using plastic cement filler colored to match finish of railings.

B. Welded Connections: Use fully welded joints for permanently connecting railing components. Comply with requirements for welded connections in Part 2 "Fabrication" Article whether welding is performed in the shop or in the field.

C. Expansion Joints: Install expansion joints at locations indicated but not farther apart than required to accommodate thermal movement. Provide slip-joint internal sleeve extending 2 inches (50 mm) beyond joint on either side, fasten internal sleeve securely to 1 side, and locate joint within 6 inches (150 mm) of post.

3.4 ANCHORING POSTS

A. Use steel pipe sleeves preset and anchored into concrete for installing posts. After posts have been inserted into sleeves, fill annular space between post and sleeve with [**nonshrink, nonmetallic grout**] [**or**] [**anchoring cement**], mixed and placed to comply with anchoring material manufacturer's written instructions.

B. Form or core-drill holes not less than 5 inches (125 mm) deep and 3/4 inch (20 mm) larger than OD of post for installing posts in concrete. Clean holes of loose material, insert posts, and fill annular space between post and concrete with [**nonshrink, nonmetallic grout**] [**or**] [**anchoring cement**], mixed and placed to comply with anchoring material manufacturer's written instructions.

C. Cover anchorage joint with flange of same metal as post, [**welded to post after placing anchoring material**] [**attached to post with set screws**].

D. Leave anchorage joint exposed; wipe off surplus anchoring material; and leave 1/8-inch (3-mm) buildup, sloped away from post.

E. Anchor posts to metal surfaces with oval flanges, angle type, or floor type as required by conditions, connected to posts and to metal supporting members as follows:

1. For aluminum pipe railings, attach posts using fittings designed and engineered for this purpose.
2. For stainless-steel pipe railings, weld flanges to post and bolt to supporting surfaces.
3. For steel pipe railings, weld flanges to post and bolt to metal supporting surfaces.

F. Install removable railing sections, where indicated, in slip-fit metal sockets cast in concrete.

3.5 ANCHORING RAILING ENDS

A. Anchor railing ends to concrete and masonry with round flanges connected to railing ends and anchored to wall construction with anchors and bolts.

B. Anchor railing ends to metal surfaces with flanges bolted to metal surfaces and [**welded to railing ends**] [**or**] [**connected to railing ends using nonwelded connections**].

3.6 ATTACHING HANDRAILS TO WALLS

A. Attach handrails to wall with wall brackets. Provide brackets with 1-1/2-inch (38-mm) clearance from inside face of handrail and finished wall surface.

1. Use type of bracket with flange tapped for concealed anchorage to threaded hanger bolt.
2. Use type of bracket with predrilled hole for exposed bolt anchorage.

B. Locate brackets as indicated or, if not indicated, at spacing required to support structural loads.

C. Secure wall brackets to building construction as follows:

1. For concrete and solid masonry anchorage, use drilled-in expansion shields and hanger or lag bolts.
2. For hollow masonry anchorage, use toggle bolts.
3. For wood stud partitions, use hanger or lag bolts set into wood backing between studs. Coordinate with carpentry work to locate backing members.
4. For steel-framed [**gypsum board**] [**plaster**] partitions, use hanger or lag bolts set into [**fire-retardant-treated**]wood backing between studs. Coordinate with stud installation to locate backing members.
5. For steel-framed [**gypsum board**] [**plaster**] partitions, fasten brackets directly to steel framing or concealed steel reinforcements using self-tapping screws of size and type required to support structural loads.
6. For steel-framed [**gypsum board**] [**plaster**] partitions, fasten brackets with toggle bolts installed through flanges of steel framing or through concealed steel reinforcements.

3.7 ADJUSTING AND CLEANING

A. Clean aluminum and stainless steel by washing thoroughly with clean water and soap and rinsing with clean water.

B. Touchup Painting: Immediately after erection, clean field welds, bolted connections, and abraded areas of shop paint, and paint exposed areas with same material as used for shop painting to comply with SSPC-PA 1 for touching up shop-painted surfaces.

C. Touchup Painting: Cleaning and touchup painting of field welds, bolted connections, and abraded areas of shop paint are specified in Division 9 painting Sections.

D. Galvanized Surfaces: Clean field welds, bolted connections, and abraded areas and repair galvanizing to comply with ASTM A 780.

3.8 PROTECTION

A. Protect finishes of railings from damage during construction period with temporary protective coverings approved by railing manufacturer. Remove protective coverings at time of Substantial Completion.

B. Restore finishes damaged during installation and construction period so no evidence remains of correction work. Return items that cannot be refinished in the field to the shop; make required alterations and refinish entire unit, or provide new units.

END OF SECTION 05521

SECTION 05530 - GRATINGS

PART 1 - GENERAL

1.1 RELATED DOCUMENTS

A. Drawings and general provisions of the Contract, including General and Supplementary Conditions and Division 1 Specification Sections, apply to this Section.

1.2 SUMMARY

A. This Section includes the following:

1. Metal bar gratings.
2. Expanded-metal gratings.
3. Formed-metal plank gratings.
4. Extruded-aluminum plank gratings.
5. Glass-fiber-reinforced plastic gratings.
6. Metal frames and supports for gratings.

B. Related Sections include the following:

1. Division 5 Section "Structural Steel" for structural-steel framing system components.
2. Division 5 Section "Metal Stairs" for grating treads and landings of steel-framed stairs.
3. Division 5 Section "Pipe and Tube Railings" for metal pipe and tube handrails and railings.

1.3 PERFORMANCE REQUIREMENTS

A. Structural Performance of Gratings: Provide gratings capable of withstanding the effects of gravity loads and the following loads and stresses within limits and under conditions indicated:

1. Floors: Uniform load of [**75 lbf/sq. ft. (3.59 kN/sq. m)**] [**125 lbf/sq. ft. (6.00 kN/sq. m)**] or concentrated load of 2000 lbf (8.90 kN), whichever produces the greater stress.
2. Floors: Uniform load of [**125 lbf/sq. ft. (6.00 kN/sq. m)**] [**250 lbf/sq. ft. (11.97 kN/sq. m)**] or concentrated load of 3000 lbf (13.40 kN), whichever produces the greater stress.
3. Walkways and Elevated Platforms Other Than Exits: Uniform load of 60 lbf/sq. ft. (2.87 kN/sq. m).
4. Walkways and Elevated Platforms Used as Exits: Uniform load of 100 lbf/sq. ft. (4.79 kN/sq. m).
5. Sidewalks and Vehicular Driveways, Subject to Trucking: Uniform load of 250 lbf/sq. ft. (11.97 kN/sq. m) or concentrated load of 8000 lbf (35.60 kN), whichever produces the greater stress.
6. Limit deflection to [**L/240**] [**L/360**] <**Insert deflection ratio**> or 1/4 inch (6.4 mm), whichever is less.

B. Seismic Performance: Provide gratings capable of withstanding the effects of earthquake motions determined according to [**ASCE 7, "Minimum Design Loads for Buildings and Other Structures": Section 9, "Earthquake Loads."**] <**Insert applicable code requirement.**>

1.4 SUBMITTALS

A. Product Data: For the following:

1. Formed-metal plank gratings.
2. Extruded-aluminum plank gratings.
3. Glass-fiber-reinforced plastic gratings.
4. Clips and anchorage devices for gratings.
5. Paint products.

B. Shop Drawings: Include plans, elevations, sections, details, and attachments to other work.

1. Provide templates for anchors and bolts specified for installation under other Sections.
2. For installed products indicated to comply with design loads, include structural analysis data signed and sealed by the qualified professional engineer responsible for their preparation.

C. Mill Certificates: Signed by manufacturers of stainless-steel sheet certifying that products furnished comply with requirements.

D. Welding certificates.

E. Qualification Data: For professional engineer.

1.5 QUALITY ASSURANCE

A. Metal Bar Grating Standards: Comply with [**NAAMM MBG 531, "Metal Bar Grating Manual**][**" and**] [**NAAMM MBG 532, "Heavy-Duty Metal Bar Grating Manual**]."

B. Welding: Qualify procedures and personnel according to the following:

1. AWS D1.1, "Structural Welding Code--Steel."
2. AWS D1.2, "Structural Welding Code--Aluminum."
3. AWS D1.3, "Structural Welding Code--Sheet Steel."
4. AWS D1.6, "Structural Welding Code--Stainless Steel."

1.6 PROJECT CONDITIONS

A. Field Measurements: Verify actual locations of walls and other construction contiguous with gratings by field measurements before fabrication and indicate measurements on Shop Drawings.

1. Established Dimensions: Where field measurements cannot be made without delaying the Work, establish dimensions and proceed with fabricating gratings without field

measurements. Coordinate wall and other contiguous construction to ensure that actual dimensions correspond to established dimensions.

2. Provide allowance for trimming and fitting at site.

1.7 COORDINATION

A. Coordinate installation of anchorages for gratings, grating frames, and supports. Furnish setting drawings, templates, and directions for installing anchorages, including sleeves, concrete inserts, anchor bolts, and items with integral anchors, that are to be embedded in concrete or masonry. Deliver such items to Project site in time for installation.

PART 2 - PRODUCTS

2.1 MANUFACTURERS

A. Available Manufacturers: Subject to compliance with requirements, manufacturers offering products that may be incorporated into the Work include, but are not limited to, the following:

B. Manufacturers: Subject to compliance with requirements, provide products by one of the following:

1. Metal Bar Gratings:

    a. Alabama Metal Industries Corporation.
    b. All American Grating, Inc.
    c. Barnett/Bates Corp.
    d. Borden Metal Products (Canada) Limited.
    e. Fisher & Ludlow.
    f. Grupo Metelmex, S.A. de C.V.
    g. IKG Industries; a Harsco Company.
    h. Marwas Steel Co.; Laurel Steel Products Division.
    i. Ohio Gratings, Inc.
    j. Seidelhuber Metal Products, Inc.
    k. Tru-Weld.
    l. <**Insert manufacturer's name.**>

2. Expanded-Metal Gratings:

    a. Alabama Metal Industries Corporation.
    b. All American Grating, Inc.
    c. Fisher & Ludlow.
    d. <**Insert manufacturer's name.**>

3. Formed-Metal Plank Gratings:

    a. Alabama Metal Industries Corporation.
    b. Fisher & Ludlow.
    c. GS Metals Corp.

d. IKG Industries; a Harsco Company.
e. Morton Manufacturing Company.
f. Unistrut Corporation.
g. <**Insert manufacturer's name.**>

4. Extruded-Aluminum Plank Gratings:

a. Alabama Metal Industries Corporation.
b. IKG Industries; a Harsco Company.
c. Ohio Gratings, Inc.
d. Seidelhuber Metal Products, Inc.
e. <**Insert manufacturer's name.**>

5. Glass-Fiber-Reinforced Plastic Gratings:

a. Creative Pultrusions, Inc.
b. Enduro Systems Inc.; Composite Products Division.
c. Fibergrate Composite Structures Inc.
d. Fisher & Ludlow.
e. IKG Industries; a Harsco Company.
f. Seasafe, Inc.
g. Strongwell.
h. <**Insert manufacturer's name.**>

2.2 FERROUS METALS

A. Steel Plates, Shapes, and Bars: ASTM A 36/A 36M.

B. Wire Rod for Grating Crossbars: ASTM A 510 (ASTM A 510M).

C. Uncoated Steel Sheet: ASTM A 1011/A 1011M, structural steel, Grade 30 (Grade 205).

D. Galvanized Steel Sheet: ASTM A 653/A 653M, structural quality, Grade 33 (Grade 230), with G90 (Z275) coating.

E. Expanded Metal, Carbon Steel: ASTM F 1267, Class 1.

F. Expanded Metal, Galvanized Steel: ASTM F 1267, Class 2, Grade A.

G. Stainless-Steel Sheet, Strip, Plate, and Flat Bars: ASTM A 666, Type [**304**] [**316**].

H. Stainless-Steel Bars and Shapes: ASTM A 276, Type [**304**] [**316**].

I. Expanded Metal, Stainless Steel: ASTM F 1267, Class 3, made from stainless-steel sheet complying with ASTM A 666, Type [**304**] [**316**].

2.3 ALUMINUM

A. Aluminum, General: Provide alloy and temper recommended by aluminum producer for type of use indicated, and with not less than the strength and durability properties of alloy and temper designated below for each aluminum form required.

B. Extruded Bars and Shapes: ASTM B 221 (ASTM B 221M), alloys as follows:

1. 6061-T6 or 6063-T6, for bearing bars of gratings and shapes.
2. 6061-T1, for grating crossbars.

C. Aluminum Sheet: ASTM B 209 (ASTM B 209M), Alloy 5052-H32.

2.4 FASTENERS

A. General: Unless otherwise indicated, provide Type [**304**] [**316**] stainless-steel fasteners for exterior use and zinc-plated fasteners with coating complying with ASTM B 633, Class Fe/Zn 5, at exterior walls. Provide stainless-steel fasteners for fastening aluminum. Select fasteners for type, grade, and class required.

B. Steel Bolts and Nuts: Regular hexagon-head bolts, ASTM A 307, Grade A (ASTM F 568M, Property Class 4.6); with hex nuts, ASTM A 563 (ASTM A 563M); and, where indicated, flat washers.

C. Stainless-Steel Bolts and Nuts: Regular hexagon-head annealed stainless-steel bolts, nuts, and, where indicated, flat washers; ASTM F 593 (ASTM F 738M) for bolts and ASTM F 594 (ASTM F 836M) for nuts, Alloy Group [**1 (A1)**] [**2 (A4)**].

D. Plain Washers: Round, ASME B18.22.1 (ASME B18.22M).

E. Lock Washers: Helical, spring type, ASME B18.21.1 (ASME B18.21.2M).

F. Anchors: Provide [**cast-in-place**] [**chemical**] [**or**] [**torque-controlled expansion**] anchors with capability to sustain, without failure, a load equal to six times the load imposed when installed in unit masonry and equal to four times the load imposed when installed in concrete, as determined by testing per ASTM E 488 conducted by a qualified independent testing agency.

1. Material for Anchors in Interior Locations: Carbon-steel components zinc-plated to comply with ASTM B 633, Class Fe/Zn 5.
2. Material for Anchors in Exterior Locations: Alloy Group [**1 (A1)**] [**2 (A4)**] stainless-steel bolts complying with ASTM F 593 (ASTM F 738M) and nuts complying with ASTM F 594 (ASTM F 836M).

2.5 MISCELLANEOUS MATERIALS

A. Welding Rods and Bare Electrodes: Select according to AWS specifications for metal alloy that is welded.

B. Shop Primers: Provide primers that comply with Division 9 [**painting Sections.**] [**Section "High-Performance Coatings."**]

C. Universal Shop Primer: Fast-curing, lead- and chromate-free, universal modified-alkyd primer complying with MPI#79.

1. Use primer with a VOC content of [**420 g/L (3.5 lb/gal.)**] <**Insert VOC limit**> or less when calculated according to 40 CFR 59, Subpart D (EPA Method 24).

D. Zinc-Rich Primer: Zinc-rich primer, complying with SSPC-Paint 20 or SSPC-Paint 29 and compatible with topcoat.

1. Use primer with a VOC content of [**420 g/L (3.5 lb/gal.)**] <**Insert VOC limit**> or less when calculated according to 40 CFR 59, Subpart D (EPA Method 24).
2. Available Products: Subject to compliance with requirements, products that may be incorporated into the Work include, but are not limited to, the following:
3. Products: Subject to compliance with requirements, provide one of the following:

a. Benjamin Moore & Co.; Epoxy Zinc-Rich Primer CM18/19.
b. Carboline Company; Carbozinc 621.
c. ICI Devoe Coatings; Catha-Coat 313.
d. International Coatings Limited; Interzinc 315 Epoxy Zinc-Rich Primer.
e. PPG Architectural Finishes, Inc.; Aquapon Zinc-Rich Primer 97-670.
f. Sherwin-Williams Company (The); Corothane I GalvaPac Zinc Primer.
g. Tnemec Company, Inc.; Tneme-Zinc 90-97.
h. <**Insert manufacturer's name; product name or designation.**>

E. Galvanizing Repair Paint: High-zinc-dust-content paint for regalvanizing welds in steel, complying with SSPC-Paint 20.

F. Bituminous Paint: Cold-applied asphalt emulsion complying with ASTM D 1187.

2.6 FABRICATION

A. Shop Assembly: Fabricate grating sections in shop to greatest extent possible to minimize field splicing and assembly. Disassemble units only as necessary for shipping and handling limitations. Use connections that maintain structural value of joined pieces. Clearly mark units for reassembly and coordinated installation.

B. Cut, drill, and punch material cleanly and accurately. Remove burrs and ease edges to a radius of approximately 1/32 inch (1 mm), unless otherwise indicated. Remove sharp or rough areas on exposed surfaces.

C. Form from materials of size, thickness, and shapes indicated, but not less than that needed to support indicated loads.

D. Fit exposed connections accurately together to form hairline joints.

E. Welding: Comply with AWS recommendations and the following:

1. Use materials and methods that minimize distortion and develop strength and corrosion resistance of base metals.
2. Obtain fusion without undercut or overlap.

3. Remove welding flux immediately.

F. Provide for anchorage of type indicated; coordinate with supporting structure. Fabricate and space the anchoring devices to secure gratings, frames, and supports rigidly in place and to support indicated loads.

1. Fabricate toeplates to fit grating units and weld to units in shop, unless otherwise indicated.
2. Fabricate toeplates for attaching in the field.
3. Toeplate Height: 4 inches (100 mm), unless otherwise indicated.

2.7 METAL BAR GRATINGS

A. Welded Steel Grating [**WSBG-**<#>]:

1. Bearing Bar Spacing: [**7/16 or 1/2 inch (11 or 13 mm)**] [**11/16 inch (17 mm)**] [**15/16 inch (24 mm)**] [**1-3/16 inches (30 mm)**] [**1-3/8 inches (35 mm)**] [**1-7/8 inches (48 mm)**] [**2-3/8 inches (60 mm)**] <**Insert spacing**> o.c.
2. Bearing Bar Depth: [**3/4 inch (19 mm)**] [**1 inch (25 mm)**] [**1-1/4 inches (32 mm)**] [**1-1/2 inches (38 mm)**] [**1-3/4 inches (44 mm)**] [**2 inches (51 mm)**] [**2-1/4 inches (57 mm)**] [**2-1/2 inches (64 mm)**] [**3 inches (76 mm)**] [**3-1/2 inches (89 mm)**] [**4 inches (102 mm)**] [**4-1/2 inches (114 mm)**] [**5 inches (127 mm)**] [**As required to comply with structural performance requirements**].
3. Bearing Bar Thickness: [**1/8 inch (3.2 mm)**] [**3/16 inch (4.8 mm)**] [**1/4 inch (6.4 mm)**] [**3/8 inch (9.5 mm)**] [**As required to comply with structural performance requirements**].
4. Crossbar Spacing: [**2 inches (51 mm)**] [**4 inches (102 mm)**] o.c.
5. Grating Mark W-11-4 (1 x 3/16) STEEL: 1-by-3/16-inch (25-by-4.8-mm) bearing bars at 11/16 inch (18 mm) o.c., and crossbars at 4 inches (102 mm) o.c.
6. Grating Mark W-15-4 (1 x 1/8) STEEL: 1-by-1/8-inch (25-by-3.2-mm) bearing bars at 15/16 inch (24 mm) o.c., and crossbars at 4 inches (102 mm) o.c.
7. Grating Mark W-19-4 (1-1/4 x 3/16) STEEL: 1-1/4-by-3/16-inch (32-by-4.8-mm) bearing bars at 1-3/16 inches (30 mm) o.c., and crossbars at 4 inches (102 mm) o.c.
8. Grating Mark W-19-4 (1-1/2 x 3/16) STEEL: 1-1/2-by-3/16-inch (38-by-4.8-mm) bearing bars at 1-3/16 inches (30 mm) o.c., and crossbars at 4 inches (102 mm) o.c.
9. Grating Mark W-19-4 (2 x 1/4) STEEL: 2-by-1/4-inch (51-by-6.4-mm) bearing bars at 1-3/16 inches (30 mm) o.c., and crossbars at 4 inches (102 mm) o.c.
10. Grating Mark W-30-4 (5 x 3/8) STEEL: 5-by-3/8-inch (127-by-9.5-mm) bearing bars at 1-7/8 inches (60 mm) o.c., and crossbars at 4 inches (102 mm) o.c.
11. Grating Mark: As indicated.
12. Traffic Surface: [**Plain**] [**Serrated**] [**Knurled**] [**Applied abrasive finish consisting of aluminum-oxide aggregate in an epoxy-resin adhesive**] [**As indicated**].
13. Steel Finish: [**Shop primed**] [**Hot-dip galvanized with a coating weight of not less than 1.8 oz./sq. ft. (550 g/sq. m) of coated surface**].

B. Pressure-Locked Steel Grating [**PSBG-**<#>]: Fabricated by [**pressing rectangular flush-top crossbars into slotted bearing bars**] [**swaging crossbars between bearing bars**] [**either pressing rectangular flush-top crossbars into slotted bearing bars or swaging crossbars between bearing bars**].

1. Bearing Bar Spacing: [**7/16 or 1/2 inch (11 or 13 mm)**] [**11/16 inch (17 mm)**] [**15/16 inch (24 mm)**] [**1-3/16 inches (30 mm)**] <**Insert spacing**> o.c.
2. Bearing Bar Depth: [**3/4 inch (19 mm)**] [**1 inch (25 mm)**] [**1-1/4 inches (32 mm)**] [**1-1/2 inches (38 mm)**] [**1-3/4 inches (44 mm)**] [**2 inches (51 mm)**] [**2-1/4 inches (57 mm)**] [**2-1/2 inches (64 mm)**] [**As required to comply with structural performance requirements**] <**Insert depth**>.
3. Bearing Bar Thickness: [**1/8 inch (3.2 mm)**] [**3/16 inch (4.8 mm)**] [**As required to comply with structural performance requirements**] <**Insert thickness**>.
4. Crossbar Spacing: [**2 inches (51 mm)**] [**4 inches (102 mm)**] o.c.
5. Grating Mark P-11-4 (1 x 3/16) STEEL: 1-by-3/16-inch (25-by-4.8-mm) bearing bars at 11/16 inch (18 mm) o.c., and crossbars at 4 inches (102 mm) o.c.
6. Grating Mark P-15-4 (1-1/4 x 1/8) STEEL: 1-1/4-by-1/8-inch (32-by-3.2-mm) bearing bars at 15/16 inch (24 mm) o.c., and crossbars at 4 inches (102 mm) o.c.
7. Grating Mark P-19-4 (1-1/2 x 3/16) STEEL: 1-1/2-by-3/16-inch (38-by-4.8-mm) bearing bars at 1-3/16 inches (30 mm) o.c., and crossbars at 4 inches (102 mm) o.c.
8. Grating Mark: As indicated.
9. Traffic Surface: [**Plain**] [**Serrated**] [**Knurled**] [**Applied abrasive finish consisting of aluminum-oxide aggregate in an epoxy-resin adhesive**] [**As indicated**].
10. Steel Finish: [**Shop primed**] [**Hot-dip galvanized with a coating weight of not less than 1.8 oz./sq. ft. (550 g/sq. m) of coated surface**].

C. Riveted Steel Grating [**RSBG-**<#>]:

1. Bearing Bar Spacing: [**3/4 inch (19 mm)**] [**1-1/8 inches (29 mm)**] [**2-5/16 inches (59 mm)**] <**Insert spacing**>, clear.
2. Bearing Bar Depth: [**3/4 inch (19 mm)**] [**1 inch (25 mm)**] [**1-1/4 inches (32 mm)**] [**1-1/2 inches (38 mm)**] [**1-3/4 inches (44 mm)**] [**2 inches (51 mm)**] [**2-1/4 inches (57 mm)**] [**2-1/2 inches (64 mm)**] [**3 inches (76 mm)**] [**3-1/2 inches (89 mm)**] [**4 inches (102 mm)**] [**4-1/2 inches (114 mm)**] [**5 inches (127 mm)**] [**As required to comply with structural performance requirements**].
3. Bearing Bar Thickness: [**1/8 inch (3.2 mm)**] [**3/16 inch (4.8 mm)**] [**1/4 inch (6.4 mm)**] [**3/8 inch (9.5 mm)**] [**As required to comply with structural performance requirements**].
4. Rivet Spacing: [**3-1/2 inches (89 mm)**] [**5 inches (127 mm)**] [**7 inches (178 mm)**] o.c. along bearing bar.
5. Grating Mark R-12-3-1/2 (1 x 1/8) STEEL: 1-by-1/8-inch (25-by-3.2-mm) bearing bars with 3/4-inch (19-mm) clear space between bearing bars, and rivets at 3-1/2 inches (89 mm) o.c. along bearing bar.
6. Grating Mark R-18-7 (1-1/2 x 3/16) STEEL: 1-1/2-by-3/16-inch (38-by-4.8-mm) bearing bars with 1-1/8-inch (29-mm) clear space between bearing bars, and rivets at 7 inches (178 mm) o.c. along bearing bar.
7. Grating Mark R-37-5 (4 x 1/4) STEEL: 4-by-1/4-inch (102-by-6.4-mm) bearing bars with 2-5/16-inch (59-mm) clear space between bearing bars, and rivets at 5 inches (127 mm) o.c. along bearing bar.
8. Grating Mark R-37-5 (5 x 3/8) STEEL: 5-by-3/8-inch (127-by-9.5-mm) bearing bars with 2-5/16-inch (59-mm) clear space between bearing bars, and rivets at 5 inches (127 mm) o.c. along bearing bar.
9. Grating Mark: As indicated.
10. Traffic Surface: [**Plain**] [**Serrated**] [**Knurled**] [**Applied abrasive finish consisting of aluminum-oxide aggregate in an epoxy-resin adhesive**] [**As indicated**].

11. Steel Finish: [**Shop primed**] [**Hot-dip galvanized with a coating weight of not less than 1.8 oz./sq. ft. (550 g/sq. m) of coated surface**].

D. Pressure-Locked, Stainless-Steel Grating [**PSSBG-**<#>]: Fabricated by [**pressing rectangular flush-top crossbars into slotted bearing bars**] [**swaging crossbars between bearing bars**] [**either pressing rectangular flush-top crossbars into slotted bearing bars or swaging crossbars between bearing bars**].

1. Bearing Bar Spacing: [**7/16 or 1/2 inch (11 or 13 mm)**] [**11/16 inch (17 mm)**] [**15/16 inch (24 mm)**] [**1-3/16 inches (30 mm)**] [**1-3/8 inches (35 mm)**] [**1-7/8 inches (48 mm)**] [**2-3/8 inches (60 mm)**] <**Insert spacing**> o.c.
2. Bearing Bar Depth: [**3/4 inch (19 mm)**] [**1 inch (25 mm)**] [**1-1/4 inches (32 mm)**] [**1-1/2 inches (38 mm)**] [**1-3/4 inches (44 mm)**] [**2 inches (51 mm)**] [**2-1/4 inches (57 mm)**] [**2-1/2 inches (64 mm)**] [**3 inches (76 mm)**] [**3-1/2 inches (89 mm)**] [**4 inches (102 mm)**] [**4-1/2 inches (114 mm)**] [**5 inches (127 mm)**] [**As required to comply with structural performance requirements**].
3. Bearing Bar Thickness: [**1/8 inch (3.2 mm)**] [**3/16 inch (4.8 mm)**] [**1/4 inch (6.4 mm)**] [**3/8 inch (9.5 mm)**] [**As required to comply with structural performance requirements**].
4. Crossbar Spacing: [**2 inches (51 mm)**] [**4 inches (102 mm)**] o.c.
5. Grating Mark P-11-4 (1 x 3/16) STAINLESS STEEL: 1-by-3/16-inch (25-by-4.8-mm) bearing bars at 11/16 inch (18 mm) o.c., and crossbars at 4 inches (102 mm) o.c.
6. Grating Mark P-15-2 (1 x 1/8) STAINLESS STEEL: 1-by-1/8-inch (25-by-3.2-mm) bearing bars at 15/16 inch (24 mm) o.c., and crossbars at 2 inches (51 mm) o.c.
7. Grating Mark P-19-4 (1-1/2 x 3/16) STAINLESS STEEL: 1-1/2-by-3/16-inch (38-by-4.8-mm) bearing bars at 1-3/16 inches (30 mm) o.c., and crossbars at 4 inches (102 mm) o.c.
8. Grating Mark P-30-4 (3 x 3/8) STAINLESS STEEL: 3-by-3/8-inch (76-by-9.5-mm) bearing bars at 1-7/8 inches (48 mm) o.c., and crossbars at 4 inches (102 mm) o.c.
9. Grating Mark: As indicated.
10. Traffic Surface: [**Plain**] [**Serrated**] [**Knurled**] [**Applied abrasive finish consisting of aluminum-oxide aggregate in an epoxy-resin adhesive**] [**As indicated**].
11. Finish: [**Mill finish**] [**Abrasive blasted**] [**Electropolished**].

E. Pressure-Locked, Rectangular Bar Aluminum Grating [**PABG-**<#>]: Fabricated by [**pressing rectangular flush-top crossbars into slotted bearing bars**] [**swaging crossbars between bearing bars**] [**either pressing rectangular flush-top crossbars into slotted bearing bars or swaging crossbars between bearing bars**].

1. Bearing Bar Spacing: [**7/16 or 1/2 inch (11 or 13 mm)**] [**11/16 inch (17.5 mm)**] [**15/16 inch (24 mm)**] [**1-3/16 inches (30 mm)**] <**Insert spacing**> o.c.
2. Bearing Bar Depth: [**1 inch (25 mm)**] [**1-1/4 inches (32 mm)**] [**1-1/2 inches (38 mm)**] [**1-3/4 inches (44 mm)**] [**2 inches (51 mm)**] [**2-1/4 inches (57 mm)**] [**2-1/2 inches (64 mm)**] [**As required to comply with structural performance requirements**].
3. Bearing Bar Thickness: [**1/8 inch (3.2 mm)**] [**3/16 inch (4.8 mm)**] [**1/4 inch (6.4 mm)**] [**As required to comply with structural performance requirements**].
4. Crossbar Spacing: [**2 inches (51 mm)**] [**4 inches (102 mm)**] o.c.
5. Grating Mark P-7-4 (1 x 1/8) ALUMINUM: 1-by-1/8-inch (25-by-3.2-mm) bearing bars at 7/16 inch (11 mm) o.c., and crossbars at 4 inches (102 mm) o.c.
6. Grating Mark P-11-4 (1 x 3/16) ALUMINUM: 1-by-3/16-inch (25-by-4.8-mm) bearing bars at 11/16 inch (18 mm) o.c., and crossbars at 4 inches (102 mm) o.c.

7. Grating Mark P-15-4 (1-1/2 x 3/16) ALUMINUM: 1-1/2-by-3/16-inch (38-by-4.8-mm) bearing bars at 15/16 inch (24 mm) o.c., and crossbars at 4 inches (102 mm) o.c.
8. Grating Mark P-19-4 (2 x 3/16) ALUMINUM: 2-by-3/16-inch (51-by-4.8-mm) bearing bars at 1-3/16 inches (30 mm) o.c., and crossbars at 4 inches (102 mm) o.c.
9. Grating Mark: As indicated.
10. Traffic Surface: [**Plain**] [**Applied abrasive finish consisting of aluminum-oxide aggregate in an epoxy-resin adhesive**] [**As indicated**].
11. Aluminum Finish: [**Mill finish**] [**Class I, clear, anodized finish**].

F. Pressure-Locked, I-Bar Aluminum Grating [**PAIBG-**<#>]: Fabricated by swaging crossbars between bearing bars.

1. Bearing Bar Spacing: [**7/16 or 1/2 inch (11 or 13 mm)**] [**11/16 inch (17 mm)**] [**15/16 inch (24 mm)**] [**1-3/16 inches (30 mm)**] <**Insert spacing**> o.c.
2. Bearing Bar Depth: [**1 inch (25 mm)**] [**1-1/4 inches (32 mm)**] [**1-1/2 inches (38 mm)**] [**1-3/4 inches (44 mm)**] [**2 inches (51 mm)**] [**2-1/4 inches (57 mm)**] [**2-1/2 inches (64 mm)**] [**As required to comply with structural performance requirements**].
3. Bearing Bar Flange Width: 1/4 inch (6.4 mm).
4. Crossbar Spacing: [**2 inches (51 mm)**] [**4 inches (102 mm)**] o.c.
5. Grating Mark P-11-4 (1 I-Bar) ALUMINUM: 1-inch (25-mm) I-bar bearing bars at 11/16 inch (18 mm) o.c., and crossbars at 4 inches (102 mm) o.c.
6. Grating Mark P-15-2 (1 I-Bar) ALUMINUM: 1-inch (25-mm) I-bar bearing bars at 15/16 inch (24 mm) o.c., and crossbars at 2 inches (51 mm) o.c.
7. Grating Mark P-19-4 (1-1/2 I-Bar) ALUMINUM: 1-1/2-inch (38-mm) I-bar bearing bars at 1-3/16 inches (30 mm) o.c., and crossbars at 4 inches (102 mm) o.c.
8. Grating Mark: As indicated.
9. Traffic Surface: [**Plain**] [**Grooved**] [**Applied abrasive finish consisting of aluminum-oxide aggregate in an epoxy-resin adhesive**] [**As indicated**].
10. Aluminum Finish: [**Mill finish**] [**Class I, clear, anodized finish**].

G. Removable Grating Sections: Fabricate with banding bars attached by welding to entire perimeter of each section. Include anchors and fasteners of type indicated or, if not indicated, as recommended by manufacturer for attaching to supports.

1. Provide not less than four weld lugs for each heavy-duty grating section, with each lug shop welded to two bearing bars.
2. Provide not less than 4 saddle clips for each grating section composed of rectangular bearing bars 3/16 inch (4.8 mm) or less in thickness and spaced 15/16 inch (24 mm) or more o.c., with each clip designed and fabricated to fit over 2 bearing bars.
3. Provide not less than 4 weld lugs for each grating section composed of rectangular bearing bars 3/16 inch (4.8 mm) or less in thickness and spaced less than 15/16 inch (24 mm) o.c., with each lug shop welded to 3 or more bearing bars. Interrupt intermediate bearing bars as necessary for fasteners securing grating to supports.
4. Provide not less than four flange blocks for each section of aluminum I-bar grating, with block designed to fit over lower flange of I-shaped bearing bars.
5. Furnish threaded bolts with nuts and washers for securing grating to supports.
6. Furnish self-drilling fasteners with washers for securing grating to supports.
7. Furnish galvanized malleable-iron flange clamp with galvanized bolt for securing grating to supports. Furnish as a system designed to be installed from above grating by one person.

a. Available Product: Subject to compliance with requirements, a product that may be incorporated into the Work includes, but is not limited to, "Grate-Fast" by Lindapter North America, Inc.
b. Product: Subject to compliance with requirements, provide "Grate-Fast" by Lindapter North America, Inc.

H. Fabricate cutouts in grating sections for penetrations indicated. Arrange cutouts to permit grating removal without disturbing items penetrating gratings.

1. Edge-band openings in grating that interrupt four or more bearing bars with bars of same size and material as bearing bars.

I. Do not notch bearing bars at supports to maintain elevation.

2.8 EXPANDED-METAL GRATINGS

A. Provide expanded-metal gratings in material, finish, style, size, thickness, weight, and type indicated or, if not indicated, as recommended by manufacturer for indicated applications and as needed to support indicated loads.

1. Material: [**Steel**] [**Stainless steel**] [**Aluminum**].
2. Steel Finish: [**Unfinished, oiled**] [**Shop primed**] [**Galvanized**].
3. Stainless-Steel Finish: Mill finish, as fabricated.
4. Aluminum Finish: Mill finish, as fabricated.
5. Style Designation: [**4.27 pound grating**] [**3/4 number 9**].
6. Type: [**I, expanded**] [**II, expanded and flattened**].

B. Fabricate cutouts in grating sections for penetrations of sizes and at locations indicated. Cut openings neatly and accurately to size. Edge-band openings with bars having a thickness not less than overall grating thickness at contact points.

C. Where gratings are pierced by pipes, ducts, and structural members, cut openings neatly and accurately to size and weld a strap collar not less than 1/8 inch (3 mm) thick to the cut ends. Divide panels into sections only to extent required for installation where grating platforms and runways are to be placed around previously installed pipe, ducts, and structural members.

2.9 FORMED-METAL PLANK GRATINGS

A. C-shaped channels rolled from heavy sheet metal of thickness indicated, and punched in serrated diamond shape to produce raised slip-resistant surface and drainage holes.

1. Available Products: Subject to compliance with requirements, products that may be incorporated into the Work include, but are not limited to, the following:
2. Products: Subject to compliance with requirements, provide one of the following:

a. Alabama Metal Industries Corporation; Diamond Grip.
b. Fisher & Ludlow; Grip Span.
c. GS Metals Corp.; GRIP STRUT.
d. IKG Industries, a Harsco Company; Deck Span.

e. Morton Manufacturing Company; Grip-Tac.
f. <**Insert manufacturer's name; product name or designation.**>

3. Channel Width: [**4-3/4 inches (121 mm)**] [**7 inches (178 mm)**] [**9-1/2 inches (241 mm)**] [**11-3/4 inches (298 mm)**] [**18-3/4 inches (476 mm)**] [**24 inches (610 mm)**] [**As indicated**] [**As required to comply with structural performance requirements**].
4. Channel Depth: [**1-1/2 inches (38 mm)**] [**2 inches (51 mm)**] [**2-1/2 inches (64 mm)**] [**3 inches (76 mm)**] [**As indicated**] [**As required to comply with structural performance requirements**].
5. Material: [**0.074-inch- (1.9-mm-) thick steel sheet, shop primed**] [**0.104-inch- (2.65-mm-) thick steel sheet, shop primed**] [**0.079-inch- (2.0-mm-) thick, hot-dip galvanized steel sheet**] [**0.108-inch- (2.8-mm-) thick, hot-dip galvanized steel sheet**] [**0.074-inch- (1.9-mm-) thick steel sheet, hot-dip galvanized after fabrication**] [**0.104-inch- (2.65-mm-) thick steel sheet, hot-dip galvanized after fabrication**] [**0.062-inch- (1.6-mm-) thick, stainless-steel sheet**] [**0.078-inch- (2.0-mm-) thick, stainless-steel sheet**] [**0.080-inch- (2.0-mm-) thick aluminum sheet**] [**0.100-inch- (2.5-mm-) thick aluminum sheet**].

B. Fabricate cutouts in grating sections for penetrations of sizes and at locations indicated. Cut openings neatly and accurately to size. Edge-band openings with metal sheet or bars having a thickness not less than grating material.

C. Where gratings are pierced by pipes, ducts, and structural members, cut openings neatly and accurately to size and weld a strap collar not less than 1/8 inch (3 mm) thick to the cut ends. Divide panels into sections only to extent required for installation where grating platforms and runways are to be placed around previously installed pipe, ducts, and structural members.

2.10 EXTRUDED-ALUMINUM PLANK GRATINGS

A. Provide extruded-aluminum plank gratings in type, size, and finish indicated or, if not indicated, as recommended by manufacturer for indicated applications and as needed to support indicated loads.

1. Type: Extruded-aluminum planks approximately 6 inches (152 mm) wide with multiple flanges approximately 1.2 inches (30 mm) o.c., acting as bearing bars connected by a web that serves as a walking surface. Top surface has raised ribs to increase slip resistance.
2. Depth: [**1 inch (25 mm)**] [**1-1/2 inches (38 mm)**] [**2 inches (51 mm)**] [**As required to comply with structural performance requirements**].
3. Perforations: [**None**] [**Rectangular, 19/32 by 3 inches (15 by 76 mm), with adjacent rows staggered**] [**19/32 inch (15 mm) square, with adjacent rows aligned**].
4. Finish: Mill finish, as fabricated.

B. Fabricate cutouts in grating sections for penetrations indicated. Arrange cutouts to permit grating removal without disturbing items penetrating gratings.

2.11 GLASS-FIBER-REINFORCED PLASTIC GRATINGS

A. Molded Glass-Fiber-Reinforced Gratings: Bar gratings made by placing glass-fiber strands that have been saturated with thermosetting plastic resin in molds in alternating directions to form interlocking bars without voids and with a high resin content.

1. Configuration: [**1-1/2-inch- (38-mm-) square mesh, 1 inch (25 mm) thick**] [**1-1/2-inch- (38-mm-) square mesh, 1-1/4 inches (32 mm) thick**] [**1-1/2-inch- (38-mm-) square mesh, 1-1/2 inches (38 mm) thick**] [**2-inch- (51-mm-) square mesh, 2 inches (51 mm) thick**] [**1-1/2-inch- (38-mm-) square mesh, thickness as required to comply with structural performance requirements**] [**As required to comply with structural performance requirements**] <**Insert configuration**>.
2. Weight: [**2.5 lb/sq. ft. (12.2 kg/sq. m)**] [**2.7 lb/sq. ft. (13.2 kg/sq. m)**] [**3.2 lb/sq. ft. (15.6 kg/sq. m)**] [**3.5 lb/sq. ft. (17.1 kg/sq. m)**] [**3.7 lb/sq. ft. (18.1 kg/sq. m)**] [**4.1 lb/sq. ft. (20.0 kg/sq. m)**] [**5.0 lb/sq. ft. (24.4 kg/sq. m)**] <**Insert weight**>.
3. Resin: [**Polyester**] [**Vinylester**] <**Insert description**>.
    a. Flame-Spread Index: 25 or less when tested according to ASTM E 84.
    b. U.S.D.A. Acceptance: Accepted for food-processing applications.
4. Color: [**Beige**] [**Gray**] [**Green**] [**Orange**] [**Yellow**] [**Manufacturer's standard**].
5. Traffic Surface: [**Plain, meniscus**] [**Applied abrasive finish**] [**As indicated**].

B. Pultruded Glass-Fiber-Reinforced Gratings: Bar gratings assembled from components made by simultaneously pulling glass fibers and extruding thermosetting plastic resin through a heated die under pressure to produce a product without voids and with a high glass-fiber content.

1. Configuration: [**I4010; 1-inch (25-mm) I-bars spaced 1 inch (25 mm) o.c. (40 percent open)**] [**I6010; 1-inch (25-mm) I-bars spaced 1-1/2 inches (38 mm) o.c. (60 percent open)**] [**I4015; 1-1/2-inch (38-mm) I-bars spaced 1 inch (25 mm) o.c. (40 percent open)**] [**I6015; 1-1/2-inch (38-mm) I-bars spaced 1-1/2 inches (38 mm) o.c. (60 percent open)**] [**T3320; 2-inch (51-mm) T-bars spaced 1-1/2 inches (38 mm) o.c. (33 percent open)**] [**T5020; 2-inch (51-mm) T-bars spaced 2 inches (51 mm) o.c. (50 percent open)**] [**As required to comply with structural performance requirements**] <**Insert configuration**>.
2. Weight: [**2.35 lb/sq. ft. (11.5 kg/sq. m)**] [**2.83 lb/sq. ft. (13.8 kg/sq. m)**] [**3.10 lb/sq. ft. (15.1 kg/sq. m)**] [**3.41 lb/sq. ft. (16.6 kg/sq. m)**] [**4.10 lb/sq. ft. (20.0 kg/sq. m)**] [**4.13 lb/sq. ft. (20.2 kg/sq. m)**] <**Insert weight**>.
3. Resin Type: [**Polyester**] [**Vinylester**] <**Insert description**>.
    a. Flame-Spread Index: 25 or less when tested according to ASTM E 84.
    b. U.S.D.A. Acceptance: Accepted for food processing applications.
4. Color: [**Beige**] [**Gray**] [**Green**] [**Orange**] [**Yellow**] [**Manufacturer's standard**].
5. Traffic Surface: [**Plain, grooved**] [**Applied abrasive finish**] [**As indicated**].

C. Fabricate cutouts in grating sections for penetrations indicated. Arrange cutouts to permit grating removal without disturbing items penetrating gratings.

2.12 GRATING FRAMES AND SUPPORTS

A. Frames and Supports for Metal Gratings: Fabricate from metal shapes, plates, and bars of welded construction to sizes, shapes, and profiles indicated and as necessary to receive gratings. Miter and weld connections for perimeter angle frames. Cut, drill, and tap units to receive hardware and similar items.

1. Unless otherwise indicated, fabricate from same basic metal as gratings.
2. Equip units indicated to be cast into concrete or built into masonry with integrally welded anchors. Unless otherwise indicated, space anchors 24 inches (600 mm) o.c. and provide minimum anchor units in the form of steel straps 1-1/4 inches (32 mm) wide by 1/4 inch (6 mm) thick by 8 inches (200 mm) long.

B. Frames and Supports for Glass-Fiber-Reinforced Plastic Gratings: Fabricate from glass-fiber-reinforced plastic shapes of sizes, shapes, and profiles indicated and as necessary to receive gratings. Miter connections for perimeter angle frames. Cut, drill, and tap units to receive hardware and similar items.

1. Unless otherwise indicated, use shapes made from same resin as gratings.
2. Equip units indicated to be cast into concrete or built into masonry with integral anchors.

C. Galvanize steel frames and supports in the following locations:

1. Exterior.
2. Interior, where indicated.

2.13 ALUMINUM FINISHES

A. Finish designations prefixed by AA comply with the system established by the Aluminum Association for designating aluminum finishes.

B. Class I, Clear Anodic Finish: AA-M12C22A41 (Mechanical Finish: nonspecular as fabricated; Chemical Finish: etched, medium matte; Anodic Coating: Architectural Class I, clear coating 0.018 mm or thicker) complying with AAMA 611.

2.14 STEEL FINISHES

A. Comply with NAAMM's "Metal Finishes Manual for Architectural and Metal Products" for recommendations for applying and designating finishes.

B. Finish gratings, frames, and supports after assembly.

C. Galvanizing: For those items indicated for galvanizing, apply zinc coating by the hot-dip process complying with ASTM A 123/A 123M.

D. Preparation for Shop Priming: Prepare uncoated ferrous-metal surfaces to comply with minimum requirements indicated below for SSPC surface-preparation specifications and environmental exposure conditions of installed metal fabrications:

1. Exteriors (SSPC Zone 1B)[**and Items Indicated to Receive Zinc-Rich Primer**]: SSPC-SP 6/NACE No. 3, "Commercial Blast Cleaning."
2. Interiors (SSPC Zone 1A): SSPC-SP 7/NACE No. 4, "Brush-off Blast Cleaning."

E. Apply shop primer to uncoated surfaces of gratings, frames, and supports, except those with galvanized finishes and those to be embedded in concrete or masonry, unless otherwise indicated. Comply with SSPC-PA 1, "Paint Application Specification No. 1: Shop, Field, and Maintenance Painting of Steel," for shop painting.

PART 3 - EXECUTION

3.1 INSTALLATION, GENERAL

A. Fastening to In-Place Construction: Provide anchorage devices and fasteners where necessary for securing gratings to in-place construction. Include threaded fasteners for concrete and masonry inserts, through-bolts, lag bolts, and other connectors.

B. Cutting, Fitting, and Placement: Perform cutting, drilling, and fitting required for installing gratings. Set units accurately in location, alignment, and elevation; measured from established lines and levels and free of rack.

C. Provide temporary bracing or anchors in formwork for items that are to be built into concrete or masonry.

D. Fit exposed connections accurately together to form hairline joints.

1. Weld connections that are not to be left as exposed joints but cannot be shop welded because of shipping size limitations. Do not weld, cut, or abrade the surfaces of exterior units that have been hot-dip galvanized after fabrication and are for bolted or screwed field connections.

E. Attach toeplates to gratings by welding at locations indicated.

F. Field Welding: Comply with the following requirements:

1. Use materials and methods that minimize distortion and develop strength and corrosion resistance of base metals.
2. Obtain fusion without undercut or overlap.
3. Remove welding flux immediately.

G. Corrosion Protection: Coat concealed surfaces of aluminum that will come into contact with grout, concrete, masonry, wood, or dissimilar metals, with a heavy coat of bituminous paint.

3.2 INSTALLING METAL BAR GRATINGS

A. General: Install gratings to comply with recommendations of referenced metal bar grating standards that apply to grating types and bar sizes indicated, including installation clearances and standard anchoring details.

B. Attach removable units to supporting members with type and size of clips and fasteners indicated or, if not indicated, as recommended by grating manufacturer for type of installation conditions shown.

C. Attach nonremovable units to supporting members by welding where both materials are same; otherwise, fasten by bolting as indicated above.

3.3 INSTALLING EXPANDED-METAL GRATINGS

A. General: Comply with manufacturer's written instructions for installing gratings.

B. Place units with straight edge of bond up and with long direction of diamond-shaped openings parallel to direction of span.

C. Attach removable units to supporting members by bolting at 6-inch (150-mm) intervals.

D. Attach nonremovable units to supporting members by welding, unless otherwise indicated. Space welds at 6-inch (150-mm) intervals.

E. Attach aluminum units to steel supporting members by bolting at 6-inch (150-mm) intervals.

F. Butt edges parallel to long direction of diamond-shaped openings and weld at every second bond point. Place individual grating sections so diamonds of one piece are aligned with those of adjacent sections.

3.4 INSTALLING METAL PLANK GRATINGS

A. General: Comply with manufacturer's written instructions for installing gratings. Use manufacturer's standard anchor clips and hold-down devices for bolted connections.

B. Attach removable units to supporting members by bolting at every point of contact.

C. Attach nonremovable units to supporting members by welding, unless otherwise indicated. Comply with manufacturer's written instructions for size and spacing of welds.

D. Attach aluminum units to steel supporting members by bolting at side channels at every point of contact and by bolting intermediate planks at each end on alternate sides. Bolt adjacent planks together at midspan.

3.5 INSTALLING GLASS-FIBER-REINFORCED PLASTIC GRATINGS

A. Comply with manufacturer's written instructions for installing gratings. Use manufacturer's standard stainless-steel anchor clips and hold-down devices for bolted connections.

3.6 ADJUSTING AND CLEANING

A. Touchup Painting: Immediately after erection, clean field welds, bolted connections, and abraded areas of shop paint, and paint exposed areas with same material as used for shop painting to comply with SSPC-PA 1 requirements for touching up shop-painted surfaces.

1. Apply by brush or spray to provide a minimum 2.0-mil (0.05-mm) dry film thickness.

B. Touchup Painting: Cleaning and touchup painting of field welds, bolted connections, and abraded areas of shop paint are specified in Division 9 painting Sections.

C. Galvanized Surfaces: Clean field welds, bolted connections, and abraded areas and repair galvanizing to comply with ASTM A 780.

END OF SECTION 05530

Division 6 - Woods and Plastics

SECTION 06610

FIBERGLASS REINFORCED PLASTICS (FRP) FABRICATIONS

PULTRUDED INDUSTRIAL GRATING

PART 1 - GENERAL

1.1 SCOPE OF WORK

A. The CONTRACTOR shall furnish, fabricate (where necessary), and install all fiberglass reinforced plastic (FRP) items, with all appurtenances, accessories and incidentals necessary to produce a complete, operable and serviceable installation as shown on the Contract Drawings and as specified herein, and in accordance with the requirements of the Contract Documents.

1.2 REFERENCES

A. The publications listed below (latest revision applicable) form a part of this specification to the extent referenced herein. The publications are referred to within the text by the designation only.

AMERICAN SOCIETY FOR TESTING AND MATERIALS (ASTM) Test Methods:

ASTM D 635 Rate of Burning and/or Extent and Time of Burning of Self-Supporting Plastics in a Horizontal Position

ASTM D 732 Shear Strength of Plastics by Punch Tool

ASTM E 84 Surface Burning Characteristics of Building Materials

1.3 CONTRACTOR SUBMITTALS

A. The CONTRACTOR shall furnish shop drawings of all fabricated gratings and accessories in accordance with the provisions of this Section.

B. The CONTRACTOR shall furnish manufacturer's shop drawings clearly showing material sizes, types, styles, part or catalog numbers, complete details for the fabrication of and erection of components including, but not limited to, location, lengths, type and sizes of fasteners, clip angles, member sizes, and connection details.

C. The CONTRACTOR shall submit the manufacturer’s published literature including structural design data, structural properties data, grating load/deflection tables, corrosion resistance tables, certificates of compliance, test reports as applicable, concrete anchor systems and their allowable load tables, and design calculations for systems not sized or designed in the contract documents.

D. The CONTRACTOR shall submit sample pieces of each item specified herein for acceptance by the ENGINEER as to quality and color. Sample pieces shall be manufactured by the method to be used in the WORK.

1.4 QUALITY ASSURANCE

A. All items to be provided under this Section shall be furnished only by manufacturers having a minimum of ten (10) years experience in the design and manufacture of similar products and systems. Additionally, if requested, a record of at least five (5) previous, separate, similar successful installations in the last five (5) years shall be provided.

B. Manufacturer shall offer a 3 year limited warranty on all FRP products against defects in materials and workmanship.

C. Manufacturer shall be certified to the ISO 9001-2008 standard.

D. Manufacturer shall provide proof of certification from at least two other quality assurance programs for its facilities or products (DNV, ABS, USCG, AARR).

1.5 PRODUCT DELIVERY AND STORAGE

A. Delivery of Materials: Manufactured materials shall be delivered in original, unbroken pallets, packages, containers, or bundles bearing the label of the manufacturer. Adhesives, resins and their catalysts and hardeners shall be crated or boxed separately and noted as such to facilitate their movement to a dry indoor storage facility.

B. Storage of Products: All materials shall be carefully handled to prevent them from abrasion, cracking, chipping, twisting, other deformations, and other types of damage. Store items in an enclosed area and free from contact with soil and water. Store adhesives, resins and their catalysts and hardeners in dry indoor storage facilities between 70 and 85 degrees Fahrenheit (21 to 29 degrees Celsius) until they are required.

PART 2 - PRODUCTS

2.1 MANUFACTURER

A. Pultruded grating shall be Safe-T-Span® as manufactured by:

Fibergrate Composite Structures Inc.
5151 Belt Line Road, Suite 1212
Dallas, Texas 75254-7028 USA
(800) 527-4043 Phone (972) 250-1530 Fax

Website: www.fibergrate.com
E-mail: info@fibergrate.com

2.2 GENERAL

A. All FRP items furnished under this Section shall be composed of fiberglass reinforcement and resin in qualities, quantities, properties, arrangements and dimensions as necessary to meet the design requirements and dimensions as specified in the Contract Documents.

B. Fiberglass reinforcement shall be a combination of continuous roving, continuous strand mat, and surfacing veil in sufficient quantities as needed by the application and/or physical properties required.

C. Resins shall be {VINYL ESTER or ISOPHTHALIC - choose one} with chemical formulations as necessary to provide the corrosion resistance, strength and other physical properties as required.

D. All finished surfaces of FRP items and fabrications shall be smooth, resin-rich, free of voids and without dry spots, cracks, crazes or unreinforced areas. All glass fibers shall be well covered with resin to protect against their exposure due to wear or weathering.

E. All pultruded structural shapes shall be further protected from ultraviolet (UV) light with 1) integral UV inhibitors in the resin and 2) a synthetic surfacing veil to help produce a resin rich surface.

F. All FRP products shall have a tested flame spread rating of 25 or less per ASTM E-84 Tunnel Test. Gratings shall not burn past the 25 mm reference mark and will be classified HB per ASTM D635.

G. All grating clips shall be manufactured of Type 316SS (stainless steel).

2.3 PULTRUDED GRATING

A. Manufacture: Grating components shall be high strength and high stiffness pultruded elements having a maximum of 70% and a minimum of 60% glass content (by weight) of continuous roving and continuous strand mat fiberglass reinforcements. The finished surface of the product shall be provided with a surfacing veil to provide a resin rich surface which improves corrosion resistance and resistance to ultraviolet degradation. Bearing bars shall be interlocked and epoxied in place with a two piece cross rod system to provide a mechanical and chemical lock. Cross rods should be below the walking surface of the grating. Gratings with cross rods that are flush with the walking surface are excluded.

B. Non-slip surfacing: Grating shall be provided with a quartz grit bonded and baked to the top surface of the finished grating product.

C. Fire rating: Grating shall be fire retardant with a tested flame spread rating of 25 or less when tested in accordance with ASTM E 84. Manufacturer may be required to provide certification of ASTM E84 test on grating panels from an independent testing laboratory. Test data shall be from full scale testing of actual production grating, of the same type and material supplied on the project. Test data performed only on the base resin shall not be acceptable.

D. Resin system: The resin system used in the manufacture of the grating shall be {VEFR or ISOFR - choose one}. Manufacturer may be required to submit corrosion data from tests performed on actual grating products in standard chemical environments. Corrosion resistance data of the base resin from the manufacturer is not a true indicator of grating corrosion resistance and shall not be accepted.

E. Color: Gray or Yellow.

F. Depth: 1-1/2" deep load bars with a tolerance of plus or minus 1/32".

G. Mesh Configuration: 1" load bar spacing, 6" tie bar spacing on centers. Grating shall be SAFE-T-SPAN® I4015V or I4015I as manufactured by **Fibergrate Composite Structures Incorporated**

H. Load/Deflection: Grating shall meet manufacturers published safe recommended loadings with deflection not to exceed the following:

Uniform distributed load over a 60" span: 50 pounds per square foot, with a maximum deflection of 0.10".

I. Substitutions: Other products of equal strength, stiffness, corrosion resistance and overall quality may be submitted with the proper supporting data to the engineer for approval.

2.4 GRATING FABRICATION

A. Measurements: Grating supplied shall meet the minimum dimensional requirements as shown or specified. The Contractor shall provide and/or verify measurements in field for work fabricated to fit field conditions as required by grating manufacturer to complete the work. Determine correct size and locations of required holes or cutouts from field dimensions before grating fabrication.

B. Layout: Each grating section shall be readily removable, except where indicated on drawings. Manufacturer to provide openings and holes where located on the contract drawings. Grating supports shall be provided at openings in the grating by contractor where necessary to meet load/deflection requirements specified herein. Grating openings which fit around protrusions (pipes, cables, machinery, etc.) shall be discontinuous at approximately the centerline of opening so each section of grating is readily removable.

C. Sealing: All shop fabricated grating cuts shall be coated with vinyl ester resin to provide maximum corrosion resistance. All field fabricated grating cuts shall be coated similarly by the contractor in accordance with the manufacturer's instructions.

D. Hardware: Type 316 stainless steel hold-down clips shall be provided and spaced at a maximum of four feet apart with a minimum of four per piece of grating, or as recommended by the manufacturer.

PART 3 - EXECUTION

3.1 INSPECTION

A. Shop inspection is authorized as required by the Owner and shall be at Owner's expense. The fabricator shall give ample notice to Contractor prior to the beginning of any fabrication work so that inspection may be provided. The grating shall be as free, as commercially possible, from visual defects such as foreign inclusions, delamination, blisters, resin burns, air bubbles and pits.

3.2 INSTALLATION

A. Contractor shall install gratings in accordance with manufacturer’s assembly drawings. Lock grating panels securely in place with hold-down fasteners as specified herein. Field cut and drill fiberglass reinforced plastic products with carbide or diamond tipped bits and blades. Seal cut or drilled surfaces in accordance with manufacturer's instructions. Follow manufacturer's instructions when cutting or drilling fiberglass products or using resin products; provide adequate ventilation.

Division 7 - Thermal and Moisture Protection

SECTION 07620 - SHEET METAL FLASHING AND TRIM

PART 1 - GENERAL

1.1 RELATED DOCUMENTS

A. Drawings and general provisions of the Contract, including General and Supplementary Conditions and Division 1 Specification Sections, apply to this Section.

1.2 SUMMARY

A. This Section includes the following sheet metal flashing and trim:

1. Manufactured through-wall flashing.
2. Manufactured reglets.
3. Formed roof drainage system.
4. Formed low-slope roof flashing and trim.
5. Formed steep-slope roof flashing and trim.
6. Formed wall flashing and trim.
7. Formed equipment support flashing.
8. Formed overhead-piping safety pans.

B. Related Sections include the following:

1. Division 3 Section "Cast-in-Place Concrete" for installing reglets.
2. Division 4 Section "Unit Masonry Assemblies" for installing through-wall flashing, reglets, and other sheet metal flashing and trim.
3. Division 5 Section "Architectural Joint Systems" for manufactured sheet metal expansion-joint covers.
4. Division 6 Section "[**Rough Carpentry**] [**Miscellaneous Carpentry**]" for wood nailers, curbs, and blocking.
5. Division 7 Section "<**Insert Section title for roof shingles, shakes, or tiles**>" for installing sheet metal flashing and trim integral with roofing.
6. Division 7 Section "Metal Roof Panels" for factory-formed metal roof panels and flashing and trim not part of sheet metal flashing and trim.
7. Division 7 Section "Metal Wall Panels" for factory-formed metal wall panels and flashing and trim not part of sheet metal flashing and trim.
8. Division 7 Section "<**Insert Section title for type of membrane roofing system**>" for installing sheet metal flashing and trim integral with roofing membrane.
9. Division 7 Section "Sheet Metal Roofing" for custom-formed sheet metal roofing and flashing and trim not part sheet metal flashing and trim.
10. Division 7 Section "Manufactured Roof Specialties" for manufactured roof specialties not part of sheet metal flashing and trim.
11. Division 7 Section "Roof Accessories" for set-on-type curbs, equipment supports, roof hatches, vents, and other manufactured roof accessory units.
12. Division 7 Section "Joint Sealants" for field-applied sheet metal flashing and trim sealants.

1.3 PERFORMANCE REQUIREMENTS

A. General: Install sheet metal flashing and trim to withstand wind loads, structural movement, thermally induced movement, and exposure to weather without failing, rattling, leaking, and fastener disengagement.

B. Fabricate and install [**roof edge flashing**] [**and**] [**copings**] capable of resisting the following forces according to recommendations in FMG Loss Prevention Data Sheet 1-49:

1. Wind Zone 1: For velocity pressures of 10 to 20 lbf/sq. ft. (0.48 to 0.96 kPa): 40-lbf/sq. ft. (1.92-kPa) perimeter uplift force, 60-lbf/sq. ft. (2.87-kPa) corner uplift force, and 20-lbf/sq. ft. (0.96-kPa) outward force.
2. Wind Zone 1: For velocity pressures of 21 to 30 lbf/sq. ft. (1.00 to 1.44 kPa): 60-lbf/sq. ft. (2.87-kPa) perimeter uplift force, 90-lbf/sq. ft. (4.31-kPa) corner uplift force, and 30-lbf/sq. ft. (1.44-kPa) outward force.
3. Wind Zone 2: For velocity pressures of 31 to 45 lbf/sq. ft. (1.48 to 2.15 kPa): 90-lbf/sq. ft. (4.31-kPa) perimeter uplift force, 120-lbf/sq. ft. (5.74-kPa) corner uplift force, and 45-lbf/sq. ft. (2.15-kPa) outward force.
4. Wind Zone 3: For velocity pressures of 46 to 104 lbf/sq. ft. (2.20 to 4.98 kPa): 208-lbf/sq. ft. (9.96-kPa) perimeter uplift force, 312-lbf/sq. ft. (14.94-kPa) corner uplift force, and 104-lbf/sq. ft. (4.98-kPa) outward force.

C. Thermal Movements: Provide sheet metal flashing and trim that allow for thermal movements resulting from the following maximum change (range) in ambient and surface temperatures by preventing buckling, opening of joints, hole elongation, overstressing of components, failure of joint sealants, failure of connections, and other detrimental effects. Provide clips that resist rotation and avoid shear stress as a result of sheet metal and trim thermal movements. Base engineering calculation on surface temperatures of materials due to both solar heat gain and nighttime-sky heat loss.

1. Temperature Change (Range): 120 deg F (67 deg C), ambient; 180 deg F (100 deg C), material surfaces.

D. Water Infiltration: Provide sheet metal flashing and trim that do not allow water infiltration to building interior.

1.4 SUBMITTALS

A. Product Data: For each type of product indicated. Include construction details, material descriptions, dimensions of individual components and profiles, and finishes.

B. Shop Drawings: Show layouts of sheet metal flashing and trim, including plans and elevations. Distinguish between shop- and field-assembled work. Include the following:

1. Identify material, thickness, weight, and finish for each item and location in Project.
2. Details for forming sheet metal flashing and trim, including profiles, shapes, seams, and dimensions.
3. Details for fastening, joining, supporting, and anchoring sheet metal flashing and trim, including fasteners, clips, cleats, and attachments to adjoining work.

4. Details of expansion-joint covers, including showing direction of expansion and contraction.

C. Samples for Initial Selection: For each type of sheet metal flashing and trim indicated with factory-applied color finishes.

1. Include similar Samples of trim and accessories involving color selection.

D. Samples for Verification: For each type of exposed finish required, prepared on Samples of size indicated below:

1. Sheet Metal Flashing: 12 inches (300 mm) long. Include fasteners, [**cleats,**] [**clips,**] closures, and other attachments.
2. Trim: 12 inches (300 mm) long. Include fasteners and other exposed accessories.
3. Accessories: Full-size Sample.

1.5 QUALITY ASSURANCE

A. Sheet Metal Flashing and Trim Standard: Comply with SMACNA's "Architectural Sheet Metal Manual." Conform to dimensions and profiles shown unless more stringent requirements are indicated.

1. Copper Standard: Comply with CDA's "Copper in Architecture Handbook."

B. Mockups: Build mockups to demonstrate aesthetic effects and set quality standards for fabrication and installation.

1. Build mockup of typical roof eave[**, including built-in gutter**] [**fascia**] [**fascia trim**] [**apron flashing**], approximately 48 inches (1200 mm) long, including supporting construction cleats, seams, attachments[**, underlayment,**] and accessories.
2. Approval of mockups is for other material and construction qualities specifically approved by Architect in writing.
3. Approval of mockups does not constitute approval of deviations from the Contract Documents contained in mockups unless such deviations are specifically approved by Architect in writing.
4. Approved mockups may become part of the completed Work if undisturbed at time of Substantial Completion.

C. Preinstallation Conference: Conduct conference at Project site to comply with requirements in Division 1 Section "Project Management and Coordination."

1. Meet with Owner, Architect, Owner's insurer if applicable, Installer, and installers whose work interfaces with or affects sheet metal flashing and trim including installers of roofing materials, roof accessories, unit skylights, and roof-mounted equipment.
2. Review methods and procedures related to sheet metal flashing and trim.
3. Examine substrate conditions for compliance with requirements, including flatness and attachment to structural members.
4. Document proceedings, including corrective measures and actions required, and furnish copy of record to each participant.

1.6 DELIVERY, STORAGE, AND HANDLING

A. Deliver sheet metal flashing materials and fabrications undamaged. Protect sheet metal flashing and trim materials and fabrications during transportation and handling.

B. Unload, store, and install sheet metal flashing materials and fabrications in a manner to prevent bending, warping, twisting, and surface damage.

C. Stack materials on platforms or pallets, covered with suitable weathertight and ventilated covering. Do not store sheet metal flashing and trim materials in contact with other materials that might cause staining, denting, or other surface damage.

1.7 COORDINATION

A. Coordinate installation of sheet metal flashing and trim with interfacing and adjoining construction to provide a leakproof, secure, and noncorrosive installation.

PART 2 - PRODUCTS

2.1 MANUFACTURERS

A. In other Part 2 articles where titles below introduce lists, the following requirements apply to product selection:

1. Available Products: Subject to compliance with requirements, products that may be incorporated into the Work include, but are not limited to, products specified.
2. Products: Subject to compliance with requirements, provide one of the products specified.
3. Available Manufacturers: Subject to compliance with requirements, manufacturers offering products that may be incorporated into the Work include, but are not limited to, manufacturers specified.
4. Manufacturers: Subject to compliance with requirements, provide products by one of the manufacturers specified.

2.2 SHEET METALS

A. Copper Sheet: ASTM B 370, Temper H00 or H01, cold-rolled copper sheet.

B. Lead-Coated Copper Sheet: ASTM B 101, Temper H00 and H01, cold-rolled copper sheet, of weight (thickness) indicated below, coated both sides with lead weighing not less than 12 lb/100 sq. ft. (0.59 kg/sq. m) nor more than 15 lb/100 sq. ft. (0.73 kg/sq. m) of copper sheet (total weight of lead applied equally to both sides).

C. Aluminum Sheet: ASTM B 209 (ASTM B 209M), Alloy 3003, 3004, 3105, or 5005, Temper suitable for forming and structural performance required, but not less than H14, finished as follows:

1. Mill Finish: [**One-side**] [**Standard one-side**] [**Standard two-sides**] bright.

2. Alclad Finish: Metallurgically bonded surfacing to both sides, forming a composite aluminum sheet with reflective luster.
3. Factory Prime Coating: Where painting after installation is indicated, provide pretreatment and white or light-colored, factory-applied, baked-on epoxy primer coat; with a minimum dry film thickness of 0.2 mil (0.005 mm).
4. Siliconized-Polyester Coating: Epoxy primer and silicone-modified, polyester-enamel topcoat; with a dry film thickness of not less than 0.2 mil (0.005 mm) for primer and 0.8 mil (0.02 mm) for topcoat.

    a. Color: [**As indicated by manufacturer's designations**] [**Match Architect's samples**] [**As selected by Architect from manufacturer's full range**].

5. High-Performance Organic Finish: AA-C12C42R1x (Chemical Finish: cleaned with inhibited chemicals; Chemical Finish: acid-chromate-fluoride-phosphate conversion coating; Organic Coating: as specified below). Prepare, pretreat, and apply coating to exposed metal surfaces to comply with coating and resin manufacturers' written instructions.

    a. Fluoropolymer 2-Coat System: Manufacturer's standard 2-coat, thermocured system consisting of specially formulated inhibitive primer and fluoropolymer color topcoat containing not less than 70 percent polyvinylidene fluoride resin by weight; complying with AAMA [**2604**] [**2605**].
    b. Fluoropolymer 3-Coat System: Manufacturer's standard 3-coat, thermocured system consisting of specially formulated inhibitive primer, fluoropolymer color coat, and clear fluoropolymer topcoat, with both color coat and clear topcoat containing not less than 70 percent polyvinylidene fluoride resin by weight, with a minimum total dry film thickness of 1.5 mil (0.038 mm); complying with AAMA 2605.

        1) Color: [**As indicated by manufacturer's designations**] [**Match Architect's samples**] [**As selected by Architect from manufacturer's full range**].

6. Anodized Finish: Apply the following coil-anodized finish:

    a. Class II, Clear Anodic Finish: AA-M12C22A31 (Mechanical Finish: nonspecular as fabricated; Chemical Finish: etched, medium matte; Anodic Coating: Architectural Class II, clear coating 0.010 mm or thicker) complying with AAMA 611.
    b. Class I, Clear Anodic Finish: AA-M12C22A41 (Mechanical Finish: nonspecular as fabricated; Chemical Finish: etched, medium matte; Anodic Coating: Architectural Class I, clear coating 0.018 mm or thicker) complying with AAMA 611.
    c. Class II, Color Anodic Finish: AA-M12C22A34 (Mechanical Finish: nonspecular as fabricated; Chemical Finish: etched, medium matte; Anodic Coating: Architectural Class II, electrolytically deposited color coating 0.010 mm or thicker) complying with AAMA 611.
    d. Class I, Color Anodic Finish: AA-M12C22A44 (Mechanical Finish: nonspecular as fabricated; Chemical Finish: etched, medium matte; Anodic Coating: Architectural Class I, electrolytically deposited color coating 0.018 mm or thicker) complying with AAMA 611.

1) Color: [**Light bronze**] [**Medium bronze**] [**Dark bronze**] [**Black**].

D. Stainless-Steel Sheet: ASTM A 240/A 240M, Type 304.

1. Finish: No. [**2D (dull, cold rolled)**] [**2B (bright, reflective)**] [**3 (reflective, polished directional satin)**] [**4 (fine reflective, polished directional satin)**].

E. Zinc-Tin Alloy-Coated Stainless-Steel Sheet: ASTM A 240/A 240M, Type 304, dead-soft, fully annealed stainless-steel sheet, coated on both sides with a zinc-tin alloy (50 percent zinc, 50 percent tin).

1. Product: Subject to compliance with requirements, provide "TCS II" by Follansbee Steel.

F. Zinc-Coated (Galvanized) Steel Sheet: ASTM A 653/A 653M, G90 (Z275) coating designation; structural quality[**, mill phosphatized for field painting**].

G. Aluminum-Zinc Alloy-Coated Steel Sheet: ASTM A 792/A 792M, Class AZ50 coating designation, Grade 40 (Class AZM150 coating designation, Grade 275); structural quality[**with manufacturer's standard clear acrylic coating both sides**].

H. Prepainted, Metallic-Coated Steel Sheet: Steel sheet metallic coated by the hot-dip process and prepainted by the coil-coating process to comply with ASTM A 755/A 755M.

1. Zinc-Coated (Galvanized) Steel Sheet: ASTM A 653/A 653M, G90 (Z275) coating designation; structural quality.
2. Aluminum-Zinc Alloy-Coated Steel Sheet: ASTM A 792/A 792M, Class AZ50 coating designation, Grade 40 (Class AZM150 coating designation, Grade 275); structural quality.
3. Exposed Finishes: Apply the following coil coating:

a. Factory Prime Coating: Where painting after installation is indicated, provide pretreatment and white or light-colored, factory-applied, baked-on epoxy primer coat; with a minimum dry film thickness of 0.2 mil (0.005 mm).
b. Siliconized-Polyester Coating: Epoxy primer and silicone-modified, polyester-enamel topcoat; with a dry film thickness of not less than 0.2 mil (0.005 mm) for primer and 0.8 mil (0.02 mm) for topcoat.

1) Color: [**As indicated by manufacturer's designations**] [**Match Architect's samples**] [**As selected by Architect from manufacturer's full range**].

c. High-Performance Organic Finish: Prepare, pretreat, and apply coating to exposed metal surfaces to comply with coating and resin manufacturers' written instructions.

1) Fluoropolymer 2-Coat System: Manufacturer's standard 2-coat, thermocured system consisting of specially formulated inhibitive primer and fluoropolymer color topcoat containing not less than 70 percent polyvinylidene fluoride resin by weight; complying with physical properties and coating performance requirements of AAMA [**2604**] [**2605**], except as modified below:

a) Humidity Resistance: [**1000**] [**2000**] hours.
b) Salt-Spray Resistance: [**1000**] [**2000**] hours.

2) Fluoropolymer 3-Coat System: Manufacturer's standard 3-coat, thermocured system consisting of specially formulated inhibitive primer, fluoropolymer color coat, and clear fluoropolymer topcoat, with both color coat and clear topcoat containing not less than 70 percent polyvinylidene fluoride resin by weight, with a minimum total dry film thickness of 1.5 mil (0.038 mm); complying with physical properties and coating performance requirements of AAMA 2605, except as modified below:

a) Humidity Resistance: [**1000**] [**2000**] hours.
b) Salt-Spray Resistance: [**1000**] [**2000**] hours.

3) Color: [**As indicated by manufacturer's designations**] [**Match Architect's samples**] [**As selected by Architect from manufacturer's full range**].

I. Lead Sheet: ASTM B 749, Type L51121, copper-bearing lead sheet.

J. Zinc Sheet: Electrolytic, 99 percent pure zinc alloyed with 1 percent titanium and copper.

1. Finish: [**Bright rolled**] [**Preweathered**].

2.3 UNDERLAYMENT MATERIALS

A. Polyethylene Sheet: 6-mil- (0.15-mm-) thick polyethylene sheet complying with ASTM D 4397.

B. Felts: ASTM D 226, Type II (No. 30), asphalt-saturated organic felt, nonperforated.

C. Slip Sheet: Rosin-sized paper, minimum 3 lb/100 sq. ft. (0.16 kg/sq. m).

2.4 MISCELLANEOUS MATERIALS

A. General: Provide materials and types of fasteners, solder, welding rods, protective coatings, separators, sealants, and other miscellaneous items as required for complete sheet metal flashing and trim installation.

B. Fasteners: Wood screws, annular threaded nails, self-tapping screws, self-locking rivets and bolts, and other suitable fasteners designed to withstand design loads.

1. Nails for Copper Sheet: Copper, hardware bronze, or Series 300 stainless steel, 0.109 inch (2.8 mm) minimum and not less than 7/8 inch (22 mm) long, barbed with large head.
2. Exposed Fasteners: Heads matching color of sheet metal by means of plastic caps or factory-applied coating.
3. Fasteners for Flashing and Trim: Blind fasteners or self-drilling screws, gasketed, with hex washer head.
4. Blind Fasteners: High-strength aluminum or stainless-steel rivets.

5. Spikes and Ferrules: Same material as gutter; with spike with ferrule matching internal gutter width.

C. Solder for Copper: ASTM B 32, Grade Sn50, 50 percent tin and 50 percent lead.

D. Solder for Lead-Coated Copper: ASTM B 32, Grade Sn60, 60 percent tin and 40 percent lead.

E. Solder for Stainless Steel: ASTM B 32, Grade Sn60, with acid flux of type recommended by stainless-steel sheet manufacturer.

F. Solder for Zinc-Tin Alloy-Coated Stainless Steel: ASTM B 32, 100 percent tin.

G. Solder for Lead: ASTM B 32, Grade Sn50, 50 percent tin and 50 percent lead.

H. Solder for Zinc: ASTM B 32, 60 percent lead and 40 percent tin with low antimony, as recommended by manufacturer.

I. Burning Rod for Lead: Same composition as lead sheet.

J. Sealing Tape: Pressure-sensitive, 100 percent solids, polyisobutylene compound sealing tape with release-paper backing. Provide permanently elastic, nonsag, nontoxic, nonstaining tape.

K. Elastomeric Sealant: ASTM C 920, elastomeric [**polyurethane**] [**polysulfide**] [**silicone**] polymer sealant; of type, grade, class, and use classifications required to seal joints in sheet metal flashing and trim and remain watertight.

L. Butyl Sealant: ASTM C 1311, single-component, solvent-release butyl rubber sealant, polyisobutylene plasticized, heavy bodied for hooked-type expansion joints with limited movement.

M. Epoxy Seam Sealer: Two-part, noncorrosive, aluminum seam-cementing compound, recommended by aluminum manufacturer for exterior nonmoving joints, including riveted joints.

N. Bituminous Coating: Cold-applied asphalt mastic, SSPC-Paint 12, compounded for 15-mil (0.4-mm) dry film thickness per coat. Provide inert-type noncorrosive compound free of asbestos fibers, sulfur components, and other deleterious impurities.

O. Asphalt Roofing Cement: ASTM D 4586, asbestos free, of consistency required for application.

2.5 MANUFACTURED SHEET METAL FLASHING AND TRIM

A. Through-Wall Ribbed Sheet Metal Flashing: Manufacture through-wall sheet metal flashing for embedment in masonry with ribs at 3-inch (75-mm) intervals along length of flashing to provide an integral mortar bond.[**Manufacture through-wall flashing with snaplock receiver on exterior face to receive counterflashing.**]

1. Copper: 10 oz. (0.34 mm thick) minimum for fully concealed flashing; 16 oz. (0.55 mm thick) elsewhere.

a. [**Available**]Products:

1) Advanced Building Products Inc.; Cop-R-Loc Interlocking Flashing.
2) Cheney Flashing Company, Inc.; Cheney Flashing (Dovetail).
3) Cheney Flashing Company, Inc.; Cheney Flashing (Sawtooth).
4) Dur-O-Wal, Dayton Superior Corporation; Polytite Copper Flashing.
5) Keystone Flashing Company, Inc.; Keystone Three-Way Interlocking Thruwall Flashing.
6) Sandell Manufacturing Company, Inc.; Three-Way Saw Tooth Flashing.
7) York Manufacturing, Inc.; Cop-R-Loc Interlocking Flashing.
8) <**Insert manufacturer's name; product.**>

2. Stainless Steel: 0.0156 inch (0.4 mm) thick.

a. [**Available**]Products:

1) Cheney Flashing Company, Inc.; Cheney Flashing (Dovetail).
2) Cheney Flashing Company, Inc.; Cheney Flashing (Sawtooth).
3) Keystone Flashing Company, Inc.; Keystone Three-Way Interlocking Thruwall Flashing.

B. Reglets: Units of type, material, and profile indicated, formed to provide secure interlocking of separate reglet and counterflashing pieces, and compatible with flashing indicated[**with factory- mitered and -welded corners and junctions**].

1. [**Available**]Manufacturers:

a. Cheney Flashing Company, Inc.
b. Fry Reglet Corporation.
c. Heckmann Building Products Inc.
d. Hickman, W. P. Company.
e. Keystone Flashing Company, Inc.
f. Sandell Manufacturing Company, Inc.
g. <**Insert manufacturer's name.**>

2. Material: [**Stainless steel, 0.0187 inch (0.5 mm) thick**] [**Copper, 16 oz./sq. ft. (0.55 mm thick)**] [**Lead-coated copper, 17.2 oz./sq. ft. (0.60 mm thick)**] [**Aluminum, 0.024 inch (0.6 mm) thick**] [**Galvanized steel, 0.0217 inch (0.55 mm) thick**].
3. Surface-Mounted Type: Provide with slotted holes for fastening to substrate, with neoprene or other suitable weatherproofing washers, and with channel for sealant at top edge.
4. Stucco Type: Provide with upturned fastening flange and extension leg of length to match thickness of applied finish materials.
5. Concrete Type: Provide temporary closure tape to keep reglet free of concrete materials, special fasteners for attaching reglet to concrete forms, and guides to ensure alignment of reglet section ends.
6. Masonry Type: Provide with offset top flange for embedment in masonry mortar joint.
7. Flexible Flashing Retainer: Provide resilient plastic or rubber accessory to secure flexible flashing in reglet where clearance does not permit use of standard metal counterflashing or where Drawings show reglet without metal counterflashing.
8. Counterflashing Wind-Restraint Clips: Provide clips to be installed before counterflashing to prevent wind uplift of counterflashing lower edge.

2.6 FABRICATION, GENERAL

A. General: Custom fabricate sheet metal flashing and trim to comply with recommendations in SMACNA's "Architectural Sheet Metal Manual" that apply to design, dimensions, metal, and other characteristics of item indicated. Shop fabricate items where practicable. Obtain field measurements for accurate fit before shop fabrication.

B. Fabricate sheet metal flashing and trim in thickness or weight needed to comply with performance requirements, but not less than that specified for each application and metal.

C. Fabricate sheet metal flashing and trim without excessive oil canning, buckling, and tool marks and true to line and levels indicated, with exposed edges folded back to form hems.

1. Seams for Aluminum: Fabricate nonmoving seams with flat-lock seams. Form seams and seal with epoxy seam sealer. Rivet joints for additional strength.
2. Seams for Other Than Aluminum: Fabricate nonmoving seams in accessories with flat-lock seams. Tin edges to be seamed, form seams, and solder.

D. Sealed Joints: Form nonexpansion but movable joints in metal to accommodate elastomeric sealant to comply with SMACNA recommendations.

E. Expansion Provisions: Where lapped or bayonet-type expansion provisions in the Work cannot be used, form expansion joints of intermeshing hooked flanges, not less than 1 inch (25 mm) deep, filled with [**elastomeric**] [**butyl**] sealant concealed within joints.

F. Conceal fasteners and expansion provisions where possible on exposed-to-view sheet metal flashing and trim, unless otherwise indicated.

G. Fabricate cleats and attachment devices from same material as accessory being anchored or from compatible, noncorrosive metal.

1. Thickness: As recommended by SMACNA's "Architectural Sheet Metal Manual"[**and FMG Loss Prevention Data Sheet 1-49**] for application but not less than thickness of metal being secured.

2.7 ROOF DRAINAGE SHEET METAL FABRICATIONS

A. Hanging Gutters: Fabricate to cross section indicated, complete with end pieces, outlet tubes, and other accessories as required. Fabricate in minimum 96-inch- (2400-mm-) long sections. Furnish flat-stock gutter spacers and gutter brackets fabricated from same metal as gutters, of size recommended by SMACNA but not less than twice the gutter thickness. Fabricate expansion joints, expansion-joint covers,[**gutter bead reinforcing bars,**] and gutter accessories from same metal as gutters.

1. Gutter Style: [**A**] [**B**] [**C**] [**D**] [**E**] [**F**] [**G**] [**H**] [**I**] [**J**].
2. Expansion Joints: [**Lap type**] [**Butt type**] [**Built in**].
3. Accessories: [**Continuous removable leaf screen with sheet metal frame and hardware cloth screen**] [**Bronze wire ball downspout strainer**] [**Wire ball downspout strainer**] [**Valley baffles**].
4. Gutters with Girth up to 15 Inches (380 mm): Fabricate from the following material:

a. Copper: [**16 oz./sq. ft. (0.55 mm thick)**] <**Insert weight or thickness**>.
b. Lead-Coated Copper: [**17.2 oz./sq. ft. (0.60 mm thick)**] <**Insert weight or thickness**>.
c. Aluminum: [**0.0320 inch (0.8 mm)**] <**Insert thickness**> thick.
d. Stainless Steel: [**0.0156 inch (0.4 mm)**] <**Insert thickness**> thick.
e. Zinc-Tin Alloy-Coated Stainless Steel: [**0.015 inch (0.4 mm)**] <**Insert thickness**> thick.
f. Galvanized Steel: [**0.0217 inch (0.55 mm)**] <**Insert thickness**> thick.
g. Aluminum-Zinc Alloy-Coated Steel: [**0.0217 inch (0.55 mm)**] <**Insert thickness**> thick.
h. Prepainted, Metallic-Coated Steel: [**0.0217 inch (0.55 mm)**] <**Insert thickness**> thick.
i. Zinc: [**0.031 inch (0.80 mm)**] [**0.040 inch (1.0 mm)**] <**Insert thickness**> thick.

5. Gutters with Girth 16 to 20 Inches (410 to 510 mm): Fabricate from the following material:

a. Copper: [**16 oz./sq. ft. (0.55 mm thick)**] <**Insert weight or thickness**>.
b. Lead-Coated Copper: [**17.2 oz./sq. ft. (0.60 mm thick)**] <**Insert weight or thickness**>.
c. Aluminum: [**0.040 inch (1.0 mm)**] <**Insert thickness**> thick.
d. Stainless Steel: [**0.0187 inch (0.5 mm)**] <**Insert thickness**> thick.
e. Zinc-Tin Alloy-Coated Stainless Steel: [**0.018 inch (0.5 mm)**] <**Insert thickness**> thick.
f. Galvanized Steel: [**0.0276 inch (0.7 mm)**] <**Insert thickness**> thick.
g. Aluminum-Zinc Alloy-Coated Steel: [**0.0276 inch (0.7 mm)**] <**Insert thickness**> thick.
h. Prepainted, Metallic-Coated Steel: [**0.0276 inch (0.7 mm)**] <**Insert thickness**> thick.
i. Zinc: [**0.040 inch (1.0 mm)**] [**0.050 inch (1.2 mm)**] <**Insert thickness**> thick.

6. Gutters with Girth 21 to 25 Inches (530 to 640 mm): Fabricate from the following material:

a. Copper: [**20 oz./sq. ft. (0.7 mm thick)**] <**Insert weight or thickness**>.
b. Lead-Coated Copper: [**21.2 oz./sq. ft. (0.75 mm thick)**] <**Insert weight or thickness**>.
c. Aluminum: [**0.050 inch (1.2 mm)**] <**Insert thickness**> thick.
d. Stainless Steel: [**0.0250 inch (0.65 mm)**] <**Insert thickness**> thick.
e. Zinc-Tin Alloy-Coated Stainless Steel: [**0.0250 inch (0.65 mm)**] <**Insert thickness**> thick.
f. Galvanized Steel: [**0.0336 inch (0.85 mm)**] <**Insert thickness**> thick.
g. Aluminum-Zinc Alloy-Coated Steel: [**0.0336 inch (0.85 mm)**] <**Insert thickness**> thick.
h. Prepainted, Metallic-Coated Steel: [**0.0336 inch (0.85 mm)**] <**Insert thickness**> thick.
i. Zinc: [**0.050 inch (1.2 mm)**] [**0.060 inch (1.5 mm)**] <**Insert thickness**> thick.

7. Gutters with Girth 26 to 30 Inches (660 to 760 mm): Fabricate from the following material:

a. Copper: [**24 oz./sq. ft. (0.82 mm thick)**] <**Insert weight or thickness**>.
b. Lead-Coated Copper: [**25 oz./sq. ft. (0.87 mm thick)**] <**Insert weight or thickness**>.
c. Aluminum: [**0.063 inch (1.6 mm)**] <**Insert thickness**> thick.
d. Stainless Steel: [**0.0312 inch (0.8 mm)**] <**Insert thickness**> thick.
e. Galvanized Steel: [**0.040 inch (1.0 mm)**] <**Insert thickness**> thick.
f. Prepainted, Metallic-Coated Steel: [**0.040 inch (1.0 mm)**] <**Insert thickness**> thick.

8. Gutters with Girth 31 to 35 Inches (790 to 890 mm): Fabricate from the following material:

a. Copper: [**24 oz./sq. ft. (0.82 mm thick)**] <**Insert weight or thickness**>.
b. Lead-Coated Copper: [**25 oz./sq. ft. (0.87 mm thick)**] <**Insert weight or thickness**>.
c. Stainless Steel: [**0.0375 inch (0.95 mm)**] <**Insert thickness**> thick.
d. Galvanized Steel: [**0.0516 inch (1.3 mm)**] <**Insert thickness**> thick.
e. Prepainted, Metallic-Coated Steel: [**0.0516 inch (1.3 mm)**] <**Insert thickness**> thick.

B. Built-in Gutters: Fabricate to cross section indicated, with riveted and soldered joints, complete with end pieces, outlet tubes, and other special accessories as required. Fabricate in minimum 96-inch- (2400-mm-) long sections. Fabricate expansion joints and accessories from same metal as gutters, unless otherwise indicated.

1. Fabricate gutters with built-in expansion joints[**and gutter-end expansion joints at walls**].
2. Accessories: [**Continuous removable leaf screen with sheet metal frame and hardware cloth screen**] [**Bronze wire ball downspout strainer**] [**Wire ball downspout strainer**].
3. Fabricate built-in gutters from the following material:

a. Copper: [**16 oz./sq. ft. (0.55 mm thick)**] <**Insert weight or thickness**>.
b. Lead-Coated Copper: [**17.2 oz./sq. ft. (0.60 mm thick)**] <**Insert weight or thickness**>.
c. Stainless Steel: [**0.0156 inch (0.4 mm)**] <**Insert thickness**> thick.
d. Zinc-Tin Alloy-Coated Stainless Steel: [**0.015 inch (0.4 mm)**] <**Insert thickness**> thick.
e. Zinc: [**0.031 inch (0.80 mm)**] [**0.040 inch (1.0 mm)**] <**Insert thickness**> thick.

C. Downspouts: Fabricate [**round**] [**rectangular**] [**open-face**] downspouts complete with mitered elbows. Furnish with metal hangers, from same material as downspouts, and anchors.

1. Manufactured Hanger Style: <**Insert description.**>
2. Fabricate downspouts from the following material:

a. Copper: [**16 oz./sq. ft. (0.55 mm thick)**] <**Insert weight or thickness**>.
b. Lead-Coated Copper: [**17.2 oz./sq. ft. (0.60 mm thick)**] <**Insert weight or thickness**>.
c. Aluminum: [**0.024 inch (0.6 mm)**] <**Insert thickness**> thick.
d. Stainless Steel: [**0.0156 inch (0.4 mm)**] <**Insert thickness**> thick.

e. Zinc-Tin Alloy-Coated Stainless Steel: [**0.015 inch (0.4 mm)**] <**Insert thickness**> thick.
f. Galvanized Steel: [**0.0217 inch (0.55 mm)**] <**Insert thickness**> thick.
g. Aluminum-Zinc Alloy-Coated Steel: [**0.0217 inch (0.55 mm)**] <**Insert thickness**> thick.
h. Prepainted, Metallic-Coated Steel: [**0.0217 inch (0.55 mm)**] <**Insert thickness**> thick.
i. Zinc: [**0.031 inch (0.80 mm)**] [**0.040 inch (1.0 mm)**] <**Insert thickness**> thick.

D. Parapet Scuppers: Fabricate scuppers of dimensions required with closure flange trim to exterior, 4-inch- (100-mm-) wide wall flanges to interior, and base extending 4 inches (100 mm) beyond cant or tapered strip into field of roof. Fasten gravel guard angles to base of scupper.

1. Fabricate parapet scuppers from the following material:

a. Copper: [**16 oz./sq. ft. (0.55 mm thick)**] <**Insert weight or thickness**>.
b. Lead-Coated Copper: [**17.2 oz./sq. ft. (0.60 mm thick)**] <**Insert weight or thickness**>.
c. Aluminum: [**0.0320 inch (0.8 mm)**] <**Insert thickness**> thick.
d. Stainless Steel: [**0.0187 inch (0.5 mm)**] <**Insert thickness**> thick.
e. Zinc-Tin Alloy-Coated Stainless Steel: [**0.018 inch (0.5 mm)**] <**Insert thickness**> thick.
f. Galvanized Steel: [**0.0276 inch (0.7 mm)**] <**Insert thickness**> thick.
g. Aluminum-Zinc Alloy-Coated Steel: [**0.0276 inch (0.7 mm)**] <**Insert thickness**> thick.
h. Prepainted, Metallic-Coated Steel: [**0.0276 inch (0.7 mm)**] <**Insert thickness**> thick.
i. Zinc: [**0.031 inch (0.80 mm)**] [**0.040 inch (1.0 mm)**] <**Insert thickness**> thick.

E. Conductor Heads: Fabricate conductor heads with flanged back and stiffened top edge and of dimensions and shape indicated complete with outlet tubes[**, exterior flange trim**] [**, and**] [**built-in overflows**].

1. Fabricate conductor heads from the following material:

a. Copper: [**16 oz./sq. ft. (0.55 mm thick)**] <**Insert weight or thickness**>.
b. Lead-Coated Copper: [**17.2 oz./sq. ft. (0.60 mm thick)**] <**Insert weight or thickness**>.
c. Aluminum: [**0.0320 inch (0.8 mm)**] <**Insert thickness**> thick.
d. Stainless Steel: [**0.0156 inch (0.4 mm)**] <**Insert thickness**> thick.
e. Zinc-Tin Alloy-Coated Stainless Steel: [**0.015 inch (0.4 mm)**] <**Insert thickness**> thick.
f. Galvanized Steel: [**0.0276 inch (0.7 mm)**] <**Insert thickness**> thick.
g. Aluminum-Zinc Alloy-Coated Steel: [**0.0276 inch (0.7 mm)**] <**Insert thickness**> thick.
h. Prepainted, Metallic-Coated Steel: [**0.0276 inch (0.7 mm)**] <**Insert thickness**> thick.
i. Zinc: [**0.031 inch (0.80 mm)**] [**0.040 inch (1.0 mm)**] <**Insert thickness**> thick.

2.8 LOW-SLOPE ROOF SHEET METAL FABRICATIONS

A. Roof Edge Flashing (Gravel Stop) and Fascia Caps: Fabricate in minimum 96-inch- (2400-mm-) long, but not exceeding 10-foot- (3-m-) long, sections. Furnish with 6-inch- (150-mm-) wide joint cover plates.

1. Joint Style: [**Lap, 4 inches (100 mm) wide**] [**Butt, with 12-inch- (300-mm-) wide concealed backup plate**] [**Butt, with 6-inch- (150-mm-) wide exposed cover plates**] [**Butt, with 12-inch- (300-mm-) wide concealed backup plate and 6-inch- (150-mm-) wide exposed cover plates**].
2. Fabricate with scuppers spaced 10 feet (3 m) <**Insert spacing**> apart, of dimensions required with 4-inch- (100-mm-) wide flanges and base extending 4 inches (100 mm) beyond cant or tapered strip into field of roof. Fasten gravel guard angles to base of scupper.
3. Fabricate scuppers from the following material:

    a. Copper: [**20 oz./sq. ft. (0.7 mm thick)**] <**Insert weight or thickness**>.
    b. Lead-Coated Copper: [**21.2 oz./sq. ft. (0.75 mm thick)**] <**Insert weight or thickness**>.
    c. Aluminum: [**0.050 inch (1.2 mm)**] <**Insert thickness**> thick.
    d. Stainless Steel: [**0.0187 inch (0.5 mm)**] <**Insert thickness**> thick.
    e. Zinc-Tin Alloy-Coated Stainless Steel: [**0.018 inch (0.5 mm)**] <**Insert thickness**> thick.
    f. Galvanized Steel: [**0.0276 inch (0.7 mm)**] <**Insert thickness**> thick.
    g. Aluminum-Zinc Alloy-Coated Steel: [**0.0276 inch (0.7 mm)**] <**Insert thickness**> thick.
    h. Prepainted, Metallic-Coated Steel: [**0.0276 inch (0.7 mm)**] <**Insert thickness**> thick.
    i. Zinc: [**0.050 inch (1.2 mm)**] [**0.060 inch (1.5 mm)**] <**Insert thickness**> thick.

B. Copings: Fabricate in minimum 96-inch- (2400-mm-) long, but not exceeding 10-foot- (3-m-) long, sections. Fabricate joint plates of same thickness as copings. Furnish with continuous cleats to support edge of external leg and[**drill elongated holes for fasteners on**] interior leg. Miter corners, seal, and solder or weld watertight.

1. Joint Style: [**Butt, with 12-inch- (300-mm-) wide concealed backup plate**] [**Butt, with 6-inch- (150-mm-) wide exposed cover plates**] [**Butt, with 12-inch- (300-mm-) wide concealed backup plate and 6-inch- (150-mm-) wide exposed cover plates**].
2. Fabricate copings from the following material:

    a. Copper: [**24 oz./sq. ft. (0.82 mm thick)**] <**Insert weight or thickness**>.
    b. Lead-Coated Copper: [**25 oz./sq. ft. (0.87 mm thick)**] <**Insert weight or thickness**>.
    c. Aluminum: [**0.050 inch (1.2 mm)**] <**Insert thickness**> thick.
    d. Stainless Steel: [**0.0250 inch (0.65 mm)**] <**Insert thickness**> thick.
    e. Zinc-Tin Alloy-Coated Stainless Steel: [**0.0250 inch (0.65 mm)**] <**Insert thickness**> thick.
    f. Galvanized Steel: [**0.0396 inch (1.0 mm)**] <**Insert thickness**> thick.
    g. Aluminum-Zinc Alloy-Coated Steel: [**0.0396 inch (1.0 mm)**] <**Insert thickness**> thick.

h. Prepainted, Metallic-Coated Steel: [**0.0396 inch (1.0 mm)**] <**Insert thickness**> thick.
i. Zinc: [**0.050 inch (1.2 mm)**] [**0.060 inch (1.5 mm)**] <**Insert thickness**> thick.

C. [**Roof**] [**and**] [**Roof to Wall Transition**] [**Roof to Sheet Metal Roof Edging Transition**] Expansion-Joint Cover: Fabricate from the following material:

1. Copper: [**16 oz./sq. ft. (0.55 mm thick)**] <**Insert weight or thickness**>.
2. Lead-Coated Copper: [**17.2 oz./sq. ft. (0.60 mm thick)**] <**Insert weight or thickness**>.
3. Aluminum: [**0.050 inch (1.2 mm)**] <**Insert thickness**> thick.
4. Stainless Steel: [**0.0250 inch (0.65 mm)**] <**Insert thickness**> thick.
5. Zinc-Tin Alloy-Coated Stainless Steel: [**0.0250 inch (0.65 mm)**] <**Insert thickness**> thick.
6. Galvanized Steel: [**0.0336 inch (0.85 mm)**] <**Insert thickness**> thick.
7. Aluminum-Zinc Alloy-Coated Steel: [**0.0336 inch (0.85 mm)**] <**Insert thickness**> thick.
8. Prepainted, Metallic-Coated Steel: [**0.0336 inch (0.85 mm)**] <**Insert thickness**> thick.
9. Zinc: [**0.031 inch (0.80 mm)**] [**0.040 inch (1.0 mm)**] <**Insert thickness**> thick.

D. Base Flashing: Fabricate from the following material:

1. Copper: [**20 oz./sq. ft. (0.7 mm thick)**] <**Insert weight or thickness**>.
2. Lead-Coated Copper: [**21.2 oz./sq. ft. (0.75 mm thick)**] <**Insert weight or thickness**>.
3. Aluminum: [**0.040 inch (1.0 mm)**] <**Insert thickness**> thick.
4. Stainless Steel: [**0.0187 inch (0.5 mm)**] <**Insert thickness**> thick.
5. Zinc-Tin Alloy-Coated Stainless Steel: [**0.018 inch (0.5 mm)**] <**Insert thickness**> thick.
6. Galvanized Steel: [**0.0276 inch (0.7 mm)**] <**Insert thickness**> thick.
7. Aluminum-Zinc Alloy-Coated Steel: [**0.0276 inch (0.7 mm)**] <**Insert thickness**> thick.
8. Prepainted, Metallic-Coated Steel: [**0.0276 inch (0.7 mm)**] <**Insert thickness**> thick.
9. Zinc: [**0.031 inch (0.80 mm)**] [**0.040 inch (1.0 mm)**] <**Insert thickness**> thick.

E. Counterflashing: Fabricate from the following material:

1. Copper: [**16 oz./sq. ft. (0.55 mm thick)**] <**Insert weight or thickness**>.
2. Lead-Coated Copper: [**17.2 oz./sq. ft. (0.60 mm thick)**] <**Insert weight or thickness**>.
3. Aluminum: [**0.0320 inch (0.8 mm)**] <**Insert thickness**> thick.
4. Stainless Steel: [**0.0187 inch (0.5 mm)**] <**Insert thickness**> thick.
5. Zinc-Tin Alloy-Coated Stainless Steel: [**0.018 inch (0.5 mm)**] <**Insert thickness**> thick.
6. Galvanized Steel: [**0.0217 inch (0.55 mm)**] <**Insert thickness**> thick.
7. Aluminum-Zinc Alloy-Coated Steel: [**0.0217 inch (0.55 mm)**] <**Insert thickness**> thick.
8. Prepainted, Metallic-Coated Steel: [**0.0217 inch (0.55 mm)**] <**Insert thickness**> thick.
9. Zinc: [**0.031 inch (0.80 mm)**] [**0.040 inch (1.0 mm)**] <**Insert thickness**> thick.

F. Flashing Receivers: Fabricate from the following material:

1. Copper: [**16 oz./sq. ft. (0.55 mm thick)**] <**Insert weight or thickness**>.
2. Lead-Coated Copper: [**17.2 oz./sq. ft. (0.60 mm thick)**] <**Insert weight or thickness**>.
3. Aluminum: [**0.0320 inch (0.8 mm)**] <**Insert thickness**> thick.
4. Stainless Steel: [**0.0156 inch (0.4 mm)**] <**Insert thickness**> thick.
5. Zinc-Tin Alloy-Coated Stainless Steel: [**0.015 inch (0.4 mm)**] <**Insert thickness**> thick.
6. Galvanized Steel: [**0.0217 inch (0.55 mm)**] <**Insert thickness**> thick.
7. Aluminum-Zinc Alloy-Coated Steel: [**0.0217 inch (0.55 mm)**] <**Insert thickness**> thick.

8. Prepainted, Metallic-Coated Steel: [**0.0217 inch (0.55 mm)**] <**Insert thickness**> thick.
9. Zinc: [**0.031 inch (0.80 mm)**] [**0.040 inch (1.0 mm)**] <**Insert thickness**> thick.

G. Roof-Penetration Flashing: Fabricate from the following material:

1. Lead: [**4.0 lb/sq. ft. (1.6 mm thick)**] <**Insert weight or thickness**>, hard tempered.
2. Copper: [**16 oz./sq. ft. (0.55 mm thick)**] <**Insert weight or thickness**>.
3. Lead-Coated Copper: [**17.2 oz./sq. ft. (0.60 mm thick)**] <**Insert weight or thickness**>.
4. Stainless Steel: [**0.0187 inch (0.5 mm)**] <**Insert thickness**> thick.
5. Zinc-Tin Alloy-Coated Stainless Steel: [**0.018 inch (0.5 mm)**] <**Insert thickness**> thick.
6. Galvanized Steel: [**0.0276 inch (0.7 mm)**] <**Insert thickness**> thick.
7. Aluminum-Zinc Alloy-Coated Steel: [**0.0276 inch (0.7 mm)**] <**Insert thickness**> thick.
8. Prepainted, Metallic-Coated Steel: [**0.0276 inch (0.7 mm)**] <**Insert thickness**> thick.
9. Zinc: [**0.031 inch (0.80 mm)**] [**0.040 inch (1.0 mm)**] <**Insert thickness**> thick.

H. Splash Pans: Fabricate from the following material:

1. Copper: [**16 oz./sq. ft. (0.55 mm thick)**] <**Insert weight or thickness**>.
2. Lead-Coated Copper: [**17.2 oz./sq. ft. (0.60 mm thick)**] <**Insert weight or thickness**>.
3. Aluminum: [**0.040 inch (1.0 mm)**] <**Insert thickness**> thick.
4. Stainless Steel: [**0.0187 inch (0.5 mm)**] <**Insert thickness**> thick.
5. Zinc-Tin Alloy-Coated Stainless Steel: [**0.018 inch (0.5 mm)**] <**Insert thickness**> thick.
6. Zinc: [**0.031 inch (0.80 mm)**] [**0.040 inch (1.0 mm)**] <**Insert thickness**> thick.

I. Roof-Drain Flashing: Fabricate from the following material:

1. Lead: [**4.0 lb/sq. ft. (1.6 mm thick)**] <**Insert weight or thickness**>, hard tempered.
2. Copper: [**13.2 oz./sq. ft. (0.45 mm thick)**] <**Insert weight or thickness**>.
3. Lead-Coated Copper: [**12 oz./sq. ft. (0.4 mm thick)**] <**Insert weight or thickness**>.
4. Stainless Steel: [**0.0156 inch (0.4 mm)**] <**Insert thickness**> thick.
5. Zinc-Tin Alloy-Coated Stainless Steel: [**0.015 inch (0.4 mm)**] <**Insert thickness**> thick.

2.9 STEEP-SLOPE ROOF SHEET METAL FABRICATIONS

A. Apron, Step, Cricket, and Backer Flashing: Fabricate from the following material:

1. Copper: [**16 oz./sq. ft. (0.55 mm thick)**] <**Insert weight or thickness**>.
2. Lead-Coated Copper: [**17.2 oz./sq. ft. (0.60 mm thick)**] <**Insert weight or thickness**>.
3. Aluminum: [**0.0320 inch (0.8 mm)**] <**Insert thickness**> thick.
4. Stainless Steel: [**0.0156 inch (0.4 mm)**] <**Insert thickness**> thick.
5. Zinc-Tin Alloy-Coated Stainless Steel: [**0.015 inch (0.4 mm)**] <**Insert thickness**> thick.
6. Galvanized Steel: [**0.0217 inch (0.55 mm)**] <**Insert thickness**> thick.
7. Aluminum-Zinc Alloy-Coated Steel: [**0.0217 inch (0.55 mm)**] <**Insert thickness**> thick.
8. Prepainted, Metallic-Coated Steel: [**0.0217 inch (0.55 mm)**] <**Insert thickness**> thick.
9. Zinc: [**0.031 inch (0.80 mm)**] [**0.040 inch (1.0 mm)**] <**Insert thickness**> thick.

B. Valley Flashing: Fabricate from the following material:

1. Copper: [**16 oz./sq. ft. (0.55 mm thick)**] <**Insert weight or thickness**>.
2. Lead-Coated Copper: [**17.2 oz./sq. ft. (0.60 mm thick)**] <**Insert weight or thickness**>.

3. Stainless Steel: [**0.0187 inch (0.5 mm)**] <**Insert thickness**> thick.
4. Zinc-Tin Alloy-Coated Stainless Steel: [**0.018 inch (0.5 mm)**] <**Insert thickness**> thick.
5. Prepainted, Metallic-Coated Steel: [**0.0276 inch (0.7 mm)**] <**Insert thickness**> thick.
6. Zinc: [**0.031 inch (0.80 mm)**] [**0.040 inch (1.0 mm)**] <**Insert thickness**> thick.

C. Drip Edges: Fabricate from the following material:

1. Copper: [**16 oz./sq. ft. (0.55 mm thick)**] <**Insert weight or thickness**>.
2. Lead-Coated Copper: [**17.2 oz./sq. ft. (0.60 mm thick)**] <**Insert weight or thickness**>.
3. Aluminum: [**0.0320 inch (0.8 mm)**] <**Insert thickness**> thick.
4. Stainless Steel: [**0.0156 inch (0.4 mm)**] <**Insert thickness**> thick.
5. Zinc-Tin Alloy-Coated Stainless Steel: [**0.015 inch (0.4 mm)**] <**Insert thickness**> thick.
6. Galvanized Steel: [**0.0217 inch (0.55 mm)**] <**Insert thickness**> thick.
7. Aluminum-Zinc Alloy-Coated Steel: [**0.0217 inch (0.55 mm)**] <**Insert thickness**> thick.
8. Prepainted, Metallic-Coated Steel: [**0.0217 inch (0.55 mm)**] <**Insert thickness**> thick.
9. Zinc: [**0.031 inch (0.80 mm)**] [**0.040 inch (1.0 mm)**] <**Insert thickness**> thick.

D. Eave, Rake[**, Ridge, and Hip**] Flashing: Fabricate from the following material:

1. Copper: [**16 oz./sq. ft. (0.55 mm thick)**] <**Insert weight or thickness**>.
2. Lead-Coated Copper: [**17.2 oz./sq. ft. (0.60 mm thick)**] <**Insert weight or thickness**>.
3. Aluminum: [**0.0320 inch (0.8 mm)**] <**Insert thickness**> thick.
4. Stainless Steel: [**0.0156 inch (0.4 mm)**] <**Insert thickness**> thick.
5. Zinc-Tin Alloy-Coated Stainless Steel: [**0.015 inch (0.4 mm)**] <**Insert thickness**> thick.
6. Galvanized Steel: [**0.0217 inch (0.55 mm)**] <**Insert thickness**> thick.
7. Aluminum-Zinc Alloy-Coated Steel: [**0.0217 inch (0.55 mm)**] <**Insert thickness**> thick.
8. Prepainted, Metallic-Coated Steel: [**0.0217 inch (0.55 mm)**] <**Insert thickness**> thick.
9. Zinc: [**0.031 inch (0.80 mm)**] [**0.040 inch (1.0 mm)**] <**Insert thickness**> thick.

E. Base Flashing: Fabricate from the following material:

1. Copper: [**20 oz./sq. ft. (0.7 mm thick)**] <**Insert weight or thickness**>.
2. Lead-Coated Copper: [**21.2 oz./sq. ft. (0.75 mm thick)**] <**Insert weight or thickness**>.
3. Aluminum: [**0.040 inch (1.0 mm)**] <**Insert thickness**> thick.
4. Stainless Steel: [**0.0187 inch (0.5 mm)**] <**Insert thickness**> thick.
5. Zinc-Tin Alloy-Coated Stainless Steel: [**0.018 inch (0.5 mm)**] <**Insert thickness**> thick.
6. Galvanized Steel: [**0.0276 inch (0.7 mm)**] <**Insert thickness**> thick.
7. Aluminum-Zinc Alloy-Coated Steel: [**0.0276 inch (0.7 mm)**] <**Insert thickness**> thick.
8. Prepainted, Metallic-Coated Steel: [**0.0276 inch (0.7 mm)**] <**Insert thickness**> thick.
9. Zinc: [**0.031 inch (0.80 mm)**] [**0.040 inch (1.0 mm)**] <**Insert thickness**> thick.

F. Counterflashing: Fabricate from the following material:

1. Copper: [**16 oz./sq. ft. (0.55 mm thick)**] <**Insert weight or thickness**>.
2. Lead-Coated Copper: [**17.2 oz./sq. ft. (0.60 mm thick)**] <**Insert weight or thickness**>.
3. Aluminum: [**0.0320 inch (0.8 mm)**] <**Insert thickness**> thick.
4. Stainless Steel: [**0.0187 inch (0.5 mm)**] <**Insert thickness**> thick.
5. Zinc-Tin Alloy-Coated Stainless Steel: [**0.018 inch (0.5 mm)**] <**Insert thickness**> thick.
6. Galvanized Steel: [**0.0217 inch (0.55 mm)**] <**Insert thickness**> thick.
7. Aluminum-Zinc Alloy-Coated Steel: [**0.0217 inch (0.55 mm)**] <**Insert thickness**> thick.
8. Prepainted, Metallic-Coated Steel: [**0.0217 inch (0.55 mm)**] <**Insert thickness**> thick.

9. Zinc: [**0.031 inch (0.80 mm)**] [**0.040 inch (1.0 mm)**] <**Insert thickness**> thick.

G. Flashing Receivers: Fabricate from the following material:

1. Copper: [**16 oz./sq. ft. (0.55 mm thick)**] <**Insert weight or thickness**>.
2. Lead-Coated Copper: [**17.2 oz./sq. ft. (0.60 mm thick)**] <**Insert weight or thickness**>.
3. Aluminum: [**0.0320 inch (0.8 mm)**] <**Insert thickness**> thick.
4. Stainless Steel: [**0.0156 inch (0.4 mm)**] <**Insert thickness**> thick.
5. Zinc-Tin Alloy-Coated Stainless Steel: [**0.015 inch (0.4 mm)**] <**Insert thickness**> thick.
6. Galvanized Steel: [**0.0217 inch (0.55 mm)**] <**Insert thickness**> thick.
7. Aluminum-Zinc Alloy-Coated Steel: [**0.0217 inch (0.55 mm)**] <**Insert thickness**> thick.
8. Prepainted, Metallic-Coated Steel: [**0.0217 inch (0.55 mm)**] <**Insert thickness**> thick.
9. Zinc: [**0.031 inch (0.80 mm)**] [**0.040 inch (1.0 mm)**] <**Insert thickness**> thick.

H. Roof-Penetration Flashing: Fabricate from the following material:

1. Lead: [**4.0 lb/sq. ft. (1.6 mm thick)**] <**Insert weight or thickness**>, hard tempered.
2. Copper: [**16 oz./sq. ft. (0.55 mm thick)**] <**Insert weight or thickness**>.
3. Lead-Coated Copper: [**17.2 oz./sq. ft. (0.60 mm thick)**] <**Insert weight or thickness**>.
4. Stainless Steel: [**0.0187 inch (0.5 mm)**] <**Insert thickness**> thick.
5. Zinc-Tin Alloy-Coated Stainless Steel: [**0.018 inch (0.5 mm)**] <**Insert thickness**> thick.
6. Galvanized Steel: [**0.0276 inch (0.7 mm)**] <**Insert thickness**> thick.
7. Aluminum-Zinc Alloy-Coated Steel: [**0.0276 inch (0.7 mm)**] <**Insert thickness**> thick.
8. Prepainted, Metallic-Coated Steel: [**0.0276 inch (0.7 mm)**] <**Insert thickness**> thick.
9. Zinc: [**0.031 inch (0.80 mm)**] [**0.040 inch (1.0 mm)**] <**Insert thickness**> thick.

2.10 WALL SHEET METAL FABRICATIONS

A. Through-Wall Flashing: Fabricate continuous flashings in minimum 96-inch- (2400-mm-) long, but not exceeding 12 foot (3.6 m) long, sections, under copings, at shelf angles, and where indicated. Fabricate discontinuous lintel, sill, and similar flashings to extend 6 inches (150 mm) beyond each side of wall openings. Form with 2-inch- (50-mm-) high end dams. Fabricate from the following material:

1. Copper: [**16 oz./sq. ft. (0.55 mm thick)**] <**Insert weight or thickness**>.
2. Lead-Coated Copper: [**17.2 oz./sq. ft. (0.60 mm thick)**] <**Insert weight or thickness**>.
3. Stainless Steel: [**0.0156 inch (0.4 mm)**] <**Insert thickness**> thick.
4. Zinc-Tin Alloy-Coated Stainless Steel: [**0.015 inch (0.4 mm)**] <**Insert thickness**> thick.
5. Zinc: [**0.031 inch (0.80 mm)**] [**0.040 inch (1.0 mm)**] <**Insert thickness**> thick.

B. Openings Flashing in Frame Construction: Fabricate head, sill,[**jamb,**] and similar flashings to extend [**4 inches (100 mm)**] <**Insert extension**> beyond wall openings. Form head and sill flashing with 2-inch- (50-mm-) high end dams. Fabricate from the following material:

1. Copper: [**16 oz./sq. ft. (0.55 mm thick)**] <**Insert weight or thickness**>.
2. Lead-Coated Copper: [**17.2 oz./sq. ft. (0.60 mm thick)**] <**Insert weight or thickness**>.
3. Aluminum: [**0.0320 inch (0.8 mm)**] <**Insert thickness**> thick.
4. Stainless Steel: [**0.0156 inch (0.4 mm)**] <**Insert thickness**> thick.
5. Zinc-Tin Alloy-Coated Stainless Steel: [**0.015 inch (0.4 mm)**] <**Insert thickness**> thick.
6. Galvanized Steel: [**0.0217 inch (0.55 mm)**] <**Insert thickness**> thick.

7. Aluminum-Zinc Alloy-Coated Steel: [**0.0217 inch (0.55 mm)**] <**Insert thickness**> thick.
8. Prepainted, Metallic-Coated Steel: [**0.0217 inch (0.55 mm)**] <**Insert thickness**> thick.
9. Zinc: [**0.031 inch (0.80 mm)**] [**0.040 inch (1.0 mm)**] <**Insert thickness**> thick.

C. Wall Expansion-Joint Cover: Fabricate from the following material:

1. Copper: [**16 oz./sq. ft. (0.55 mm thick)**] <**Insert weight or thickness**>.
2. Lead-Coated Copper: [**17.2 oz./sq. ft. (0.60 mm thick)**] <**Insert weight or thickness**>.
3. Aluminum: [**0.040 inch (1.0 mm)**] <**Insert thickness**> thick.
4. Stainless Steel: [**0.0187 inch (0.5 mm)**] <**Insert thickness**> thick.
5. Zinc-Tin Alloy-Coated Stainless Steel: [**0.018 inch (0.5 mm)**] <**Insert thickness**> thick.
6. Galvanized Steel: [**0.0276 inch (0.7 mm)**] <**Insert thickness**> thick.
7. Aluminum-Zinc Alloy-Coated Steel: [**0.0276 inch (0.7 mm)**] <**Insert thickness**> thick.
8. Prepainted, Metallic-Coated Steel: [**0.0276 inch (0.7 mm)**] <**Insert thickness**> thick.
9. Zinc: [**0.031 inch (0.80 mm)**] [**0.040 inch (1.0 mm)**] <**Insert thickness**> thick.

2.11 MISCELLANEOUS SHEET METAL FABRICATIONS

A. Equipment Support Flashing: Fabricate from the following material:

1. Copper: [**16 oz./sq. ft. (0.55 mm thick)**] <**Insert weight or thickness**>.
2. Lead-Coated Copper: [**17.2 oz./sq. ft. (0.60 mm thick)**] <**Insert weight or thickness**>.
3. Stainless Steel: [**0.0187 inch (0.5 mm)**] <**Insert thickness**> thick.
4. Zinc-Tin Alloy-Coated Stainless Steel: [**0.018 inch (0.5 mm)**] <**Insert thickness**> thick.
5. Galvanized Steel: [**0.0276 inch (0.7 mm)**] <**Insert thickness**> thick.
6. Aluminum-Zinc Alloy-Coated Steel: [**0.0276 inch (0.7 mm)**] <**Insert thickness**> thick.
7. Prepainted, Metallic-Coated Steel: [**0.0276 inch (0.7 mm)**] <**Insert thickness**> thick.

B. Overhead-Piping Safety Pans: Fabricate from the following material:

1. Copper: [**24 oz./sq. ft. (0.82 mm thick)**] <**Insert weight or thickness**>.
2. Lead-Coated Copper: [**25 oz./sq. ft. (0.87 mm thick)**] <**Insert weight or thickness**>.
3. Stainless Steel: [**0.0250 inch (0.65 mm)**] <**Insert thickness**> thick.
4. Zinc-Tin Alloy-Coated Stainless Steel: [**0.0250 inch (0.65 mm)**] <**Insert thickness**> thick.
5. Galvanized Steel: [**0.0396 inch (1.0 mm)**] <**Insert thickness**> thick.
6. Prepainted, Metallic-Coated Steel: [**0.0276 inch (0.7 mm)**] <**Insert thickness**> thick.

2.12 FINISHES

A. Comply with NAAMM's "Metal Finishes Manual for Architectural and Metal Products" for recommendations for applying and designating finishes.

B. Protect mechanical and painted finishes on exposed surfaces from damage by applying a strippable, temporary protective covering before shipping.

C. Appearance of Finished Work: Variations in appearance of abutting or adjacent pieces are acceptable if they are within one-half of the range of approved Samples. Noticeable variations in the same piece are not acceptable. Variations in appearance of other components are

acceptable if they are within the range of approved Samples and are assembled or installed to minimize contrast.

PART 3 - EXECUTION

3.1 EXAMINATION

A. Examine substrates, areas, and conditions, with Installer present, to verify actual locations, dimensions and other conditions affecting performance of work.

1. Verify that substrate is sound, dry, smooth, clean, sloped for drainage, and securely anchored.
2. Proceed with installation only after unsatisfactory conditions have been corrected.

3.2 INSTALLATION, GENERAL

A. General: Anchor sheet metal flashing and trim and other components of the Work securely in place, with provisions for thermal and structural movement. Use fasteners, solder, welding rods, protective coatings, separators, sealants, and other miscellaneous items as required to complete sheet metal flashing and trim system.

1. Torch cutting of sheet metal flashing and trim is not permitted.

B. Metal Protection: Where dissimilar metals will contact each other or corrosive substrates, protect against galvanic action by painting contact surfaces with bituminous coating or by other permanent separation as recommended by fabricator or manufacturers of dissimilar metals.

1. Coat side of [**uncoated aluminum**] [**stainless-steel**] [**and**] [**lead**] sheet metal flashing and trim with bituminous coating where flashing and trim will contact wood, ferrous metal, or cementitious construction.
2. Underlayment: Where installing metal flashing directly on cementitious or wood substrates, install a course of felt underlayment and cover with a slip sheet or install a course of polyethylene underlayment.
3. Bed flanges in thick coat of asphalt roofing cement where required for waterproof performance.

C. Install exposed sheet metal flashing and trim without excessive oil canning, buckling, and tool marks.

D. Install sheet metal flashing and trim true to line and levels indicated. Provide uniform, neat seams with minimum exposure of solder, welds, and [**elastomeric**] [**butyl**] sealant.

E. Install sheet metal flashing and trim to fit substrates and to result in watertight performance. Verify shapes and dimensions of surfaces to be covered before fabricating sheet metal.

1. Space cleats not more than 12 inches (300 mm) apart. Anchor each cleat with two fasteners. Bend tabs over fasteners.

F. Expansion Provisions: Provide for thermal expansion of exposed flashing and trim. Space movement joints at a maximum of 10 feet (3 m) with no joints allowed within 24 inches (600 mm) of corner or intersection. Where lapped or bayonet-type expansion provisions cannot be used or would not be sufficiently watertight, form expansion joints of intermeshing hooked flanges, not less than 1 inch (25 mm) deep, filled with [**elastomeric**] [**butyl**] sealant concealed within joints.

G. Fasteners: Use fasteners of sizes that will penetrate substrate not less than 1-1/4 inches (32 mm) for nails and not less than 3/4 inch (19 mm) for wood screws.

1. Galvanized or Prepainted, Metallic-Coated Steel: Use stainless-steel fasteners.
2. Aluminum: Use aluminum or stainless-steel fasteners.
3. Copper: Use copper, hardware bronze, or stainless-steel fasteners.
4. Stainless Steel: Use stainless-steel fasteners.

H. Seal joints with [**elastomeric**] [**butyl**] sealant as required for watertight construction.

1. Where sealant-filled joints are used, embed hooked flanges of joint members not less than 1 inch (25 mm) into sealant. Form joints to completely conceal sealant. When ambient temperature at time of installation is moderate, between 40 and 70 deg F (4 and 21 deg C), set joint members for 50 percent movement either way. Adjust setting proportionately for installation at higher ambient temperatures. Do not install sealant-type joints at temperatures below 40 deg F (4 deg C).
2. Prepare joints and apply sealants to comply with requirements in Division 7 Section "Joint Sealants."

I. Soldered Joints: Clean surfaces to be soldered, removing oils and foreign matter. Pretin edges of sheets to be soldered to a width of 1-1/2 inches (38 mm) except where pretinned surface would show in finished Work.

1. Do not solder [**prepainted, metallic-coated steel**] [**and**] [**aluminum**] sheet.
2. Pretinning is not required for [**lead-coated copper**] [**zinc-tin alloy-coated stainless steel**] [**and**] [**lead**].
3. Stainless-Steel Soldering: Pretin edges of uncoated sheets to be soldered using solder recommended for stainless steel and phosphoric acid flux. Promptly wash off acid flux residue from metal after soldering.
4. Copper Soldering: Tin uncoated copper surfaces at edges of sheets using solder recommended for copper work.
5. Where surfaces to be soldered are lead coated, do not tin edges, but wire brush lead coating before soldering.
6. Lead-Coated Copper Soldering: Wire brush edges of sheets before soldering.
7. Do not use open-flame torches for soldering. Heat surfaces to receive solder and flow solder into joints. Fill joints completely. Completely remove flux and spatter from exposed surfaces.

J. Aluminum Flashing: Rivet or weld joints in uncoated aluminum where necessary for strength.

3.3 ROOF DRAINAGE SYSTEM INSTALLATION

A. General: Install sheet metal roof drainage items to produce complete roof drainage system according to SMACNA recommendations and as indicated. Coordinate installation of roof perimeter flashing with installation of roof drainage system.

B. Hanging Gutters: Join sections with riveted and soldered joints or with lapped joints sealed with [**elastomeric**] [**butyl**] sealant. Provide for thermal expansion. Attach gutters at eave or fascia to firmly anchored [**gutter brackets**] [**straps**] spaced not more than 36 inches (900 mm) apart. Provide end closures and seal watertight with sealant. Slope to downspouts.

1. Fasten gutter spacers to front and back of gutter.
2. Loosely lock straps to front gutter bead and anchor to roof deck.
3. Anchor and loosely lock back edge of gutter to continuous [**cleat**] [**eave or apron flashing**].
4. Anchor back of gutter that extends onto roof deck with cleats spaced not more than 24 inches (600 mm) apart.
5. Anchor gutter with spikes and ferrules spaced not more than [**24 inches (600 mm)**] [**30 inches (750 mm)**] apart.
6. Install gutter with expansion joints at locations indicated but not exceeding 50 feet (15.24 m) apart. Install expansion joint caps.
7. Install continuous gutter screens on gutters with noncorrosive fasteners, [**removable**] [**hinged to swing open**] for cleaning gutters.

C. Built-in Gutters: Join sections with riveted and soldered or lapped joints sealed with [**elastomeric**] [**butyl**] sealant. Provide for thermal expansion. Slope to downspouts. Provide end closures and seal watertight with sealant.

1. Install felt underlayment layer in built-in gutter trough and extend to drip edge at eaves and under felt underlayment on roof sheathing. Lap sides a minimum of 2 inches (50 mm) over underlying course. Lap ends a minimum of 4 inches (100 mm). Stagger end laps between succeeding courses at least 72 inches (1830 mm). Fasten with roofing nails. Install slip sheet over felt underlayment.
2. Anchor and loosely lock back edge of gutter to continuous [**cleat**] [**eave or apron flashing**].
3. Anchor back of gutter that extends onto roof deck with cleats spaced not more than 24 inches (600 mm) apart.
4. Install gutter with expansion joints at locations indicated but not exceeding 50 feet (15.24 m) apart. Install expansion joint caps.

D. Downspouts: Join sections with 1-1/2-inch (38-mm) telescoping joints. Provide fasteners designed to hold downspouts securely 1 inch (25 mm) away from walls; locate fasteners at top and bottom and at approximately 60 inches (1500 mm) o.c. in between.

1. Provide elbows at base of downspout to direct water away from building.
2. Connect downspouts to underground drainage system indicated.

E. Parapet Scuppers: Install scuppers where indicated through parapet. Continuously support scupper, set to correct elevation, and seal flanges to interior wall face, over cants or tapered edge strips, and under roofing membrane.

1. Anchor scupper closure trim flange to exterior wall and seal or solder to scupper.
2. Loosely lock front edge of scupper with conductor head.
3. Seal or solder exterior wall scupper flanges into back of conductor head.

F. Conductor Heads: Anchor securely to wall with elevation of conductor head rim 1 inch (25 mm) below [**scupper**] [**gutter**] discharge.

G. Expansion-Joint Covers: Install expansion-joint covers at locations and of configuration indicated. Lap joints a minimum of 4 inches (100 mm) in direction of water flow.

H. Splash Pans: Install where downspouts discharge on low-sloped roofs. Set in [**asphalt roofing cement**] [**elastomeric sealant**] [**butyl sealant**] compatible with roofing membrane.

3.4 ROOF FLASHING INSTALLATION

A. General: Install sheet metal roof flashing and trim to comply with performance requirements[**, sheet metal manufacturer's written installation instructions,**] and SMACNA's "Architectural Sheet Metal Manual." Provide concealed fasteners where possible, set units true to line, and level as indicated. Install work with laps, joints, and seams that will be permanently watertight.

B. Roof Edge Flashing: Anchor to resist uplift and outward forces according to recommendations in FMG Loss Prevention Data Sheet 1-49 for specified wind zone and as indicated.

1. Interlock bottom edge of roof edge flashing with continuous cleats anchored to substrate at [**24-inch (600-mm)**] [**16-inch (400-mm)**] <**Insert spacing**> centers.

C. Copings: Anchor to resist uplift and outward forces according to recommendations in FMG Loss Prevention Data Sheet 1-49 for specified wind zone and as indicated.

1. Interlock exterior bottom edge of coping with continuous cleats anchored to substrate at [**24-inch (600-mm)**] [**16-inch (400-mm)**] <**Insert spacing**> centers.
2. Anchor interior leg of coping with screw fasteners and washers at [**24-inch (600-mm)**] [**20-inch (500-mm)**] [**18-inch (450-mm)**] <**Insert spacing**> centers.

D. Pipe or Post Counterflashing: Install counterflashing umbrella with close-fitting collar with top edge flared for [**elastomeric**] [**butyl**] sealant, extending a minimum of 4 inches (100 mm) over base flashing. Install stainless-steel draw band and tighten.

E. Counterflashing: Coordinate installation of counterflashing with installation of base flashing. Insert counterflashing in reglets or receivers and fit tightly to base flashing. Extend counterflashing 4 inches (100 mm) over base flashing. Lap counterflashing joints a minimum of 4 inches (100 mm) and bed with [**elastomeric**] [**butyl**] sealant.

1. Secure in a waterproof manner by means of [**snap-in installation and sealant or lead wedges and sealant**] [**interlocking folded seam or blind rivets and sealant**] [**anchor and washer at 36-inch (900-mm) centers**].

F. Roof-Penetration Flashing: Coordinate installation of roof-penetration flashing with installation of roofing and other items penetrating roof. Install flashing as follows:

1. Turn lead flashing down inside vent piping, being careful not to block vent piping with flashing.
2. Seal with [**elastomeric**] [**butyl**] sealant and clamp flashing to pipes penetrating roof except for lead flashing on vent piping.

3.5 WALL FLASHING INSTALLATION

A. General: Install sheet metal wall flashing to intercept and exclude penetrating moisture according to SMACNA recommendations and as indicated. Coordinate installation of wall flashing with installation of wall-opening components such as windows, doors, and louvers.

B. Through-Wall Flashing: Installation of [**manufactured**] [**formed**] through-wall flashing is specified in Division 4 Section "[**Unit Masonry Assemblies**] [**Stone Veneer Assemblies**]."

C. Reglets: Installation of reglets is specified in Division [**3 Section "Cast-in-Place Concrete**] [**4 Section "Unit Masonry Assemblies**]."

D. Openings Flashing in Frame Construction: Install continuous head, sill,[**jamb,**] and similar flashings to extend [**4 inches (100 mm)**] <**Insert extension**> beyond wall openings.

3.6 MISCELLANEOUS FLASHING INSTALLATION

A. Overhead-Piping Safety Pans: Suspend pans from pipe and install drain line to plumbing waste or drain line.

B. Equipment Support Flashing: Coordinate installation of equipment support flashing with installation of roofing and equipment. Weld or seal flashing with [**elastomeric**] [**butyl**] sealant to equipment support member.

3.7 CLEANING AND PROTECTION

A. Clean exposed metal surfaces of substances that interfere with uniform oxidation and weathering.

B. Clean and neutralize flux materials. Clean off excess solder and sealants.

C. Remove temporary protective coverings and strippable films as sheet metal flashing and trim are installed. On completion of installation, clean finished surfaces, including removing unused fasteners, metal filings, pop rivet stems, and pieces of flashing. Maintain in a clean condition during construction.

D. Replace sheet metal flashing and trim that have been damaged or that have deteriorated beyond successful repair by finish touchup or similar minor repair procedures.

END OF SECTION 07620

SECTION 07841 - THROUGH-PENETRATION FIRESTOP SYSTEMS

PART 1 - GENERAL

1.1 RELATED DOCUMENTS

A. Drawings and general provisions of the Contract, including General and Supplementary Conditions and Division 1 Specification Sections, apply to this Section.

1.2 SUMMARY

A. This Section includes through-penetration firestop systems for penetrations through fire-resistance-rated constructions, including both empty openings and openings containing penetrating items.

B. Related Sections include the following:

1. Division 7 Section "Fire-Resistive Joint Systems."
2. Division 13 Sections specifying fire-suppression piping penetrations.
3. Division 15 Sections specifying duct and piping penetrations.
4. Division 16 Sections specifying cable and conduit penetrations.

1.3 PERFORMANCE REQUIREMENTS

A. General: For penetrations through [**the following**]fire-resistance-rated constructions, including both empty openings and openings containing penetrating items, provide through-penetration firestop systems that are produced and installed to resist spread of fire according to requirements indicated, resist passage of smoke and other gases, and maintain original fire-resistance rating of construction penetrated.

1. Fire-resistance-rated walls including [**fire walls**] [**fire partitions**] [**fire barriers**] [**and**] [**smoke barriers**].
2. Fire-resistance-rated horizontal assemblies including [**floors**] [**floor/ceiling assemblies**] [**and**] [**ceiling membranes of roof/ceiling assemblies**].

B. Rated Systems: Provide through-penetration firestop systems with the following ratings determined per [**ASTM E 814**] [**or**] [**UL 1479**]:

1. F-Rated Systems: Provide through-penetration firestop systems with F-ratings indicated, but not less than that equaling or exceeding fire-resistance rating of constructions penetrated.
2. T-Rated Systems: For the following conditions, provide through-penetration firestop systems with T-ratings indicated, as well as F-ratings, where systems protect penetrating items exposed to potential contact with adjacent materials in occupiable floor areas:

a. Penetrations located outside wall cavities.
b. Penetrations located outside fire-resistance-rated shaft enclosures.

3. L-Rated Systems: [**Where through-penetration firestop systems are indicated in smoke barriers, provide**] [**Provide**] through-penetration firestop systems with L-ratings [**indicated**] [**of not more than**] [**3.0 cfm/sq. ft (0.01524cu. m/s x sq. m)**] <**Insert rating**> at both ambient temperatures and 400 deg F (204 deg C).

C. For through-penetration firestop systems exposed to view, traffic, moisture, and physical damage, provide products that, after curing, do not deteriorate when exposed to these conditions both during and after construction.

1. For piping penetrations for plumbing and wet-pipe sprinkler systems, provide moisture-resistant through-penetration firestop systems.
2. For floor penetrations with annular spaces exceeding 4 inches (100 mm) in width and exposed to possible loading and traffic, provide firestop systems capable of supporting floor loads involved, either by installing floor plates or by other means.
3. For penetrations involving insulated piping, provide through-penetration firestop systems not requiring removal of insulation.

D. For through-penetration firestop systems exposed to view, provide products with flame-spread and smoke-developed indexes of less than 25 and 450, respectively, as determined per ASTM E 84.

1.4 SUBMITTALS

A. Product Data: For each type of product indicated.

B. Shop Drawings: For each through-penetration firestop system, show each type of construction condition penetrated, relationships to adjoining construction, and type of penetrating item. Include firestop design designation of qualified testing and inspecting agency that evidences compliance with requirements for each condition indicated.

1. Submit documentation, including illustrations, from a qualified testing and inspecting agency that is applicable to each through-penetration firestop system configuration for construction and penetrating items.
2. Where Project conditions require modification to a qualified testing and inspecting agency's illustration for a particular through-penetration firestop condition, submit illustration, with modifications marked, approved by through-penetration firestop system manufacturer's fire-protection engineer as an engineering judgment or equivalent fire-resistance-rated assembly.

C. Through-Penetration Firestop System Schedule: Indicate locations of each through-penetration firestop system, along with the following information:

1. Types of penetrating items.
2. Types of constructions penetrated, including fire-resistance ratings and, where applicable, thicknesses of construction penetrated.
3. Through-penetration firestop systems for each location identified by firestop design designation of qualified testing and inspecting agency.

D. Qualification Data: For Installer.

E. Product Certificates: For through-penetration firestop system products, signed by product manufacturer.

F. Product Test Reports: From a qualified testing agency indicating through-penetration firestop system complies with requirements, based on comprehensive testing of current products.

1.5 QUALITY ASSURANCE

A. Installer Qualifications: A firm that has been approved by FMG according to FMG 4991, "Approval of Firestop Contractors."

B. Installer Qualifications: A firm experienced in installing through-penetration firestop systems similar in material, design, and extent to that indicated for this Project, whose work has resulted in construction with a record of successful performance.[**Qualifications include having the necessary experience, staff, and training to install manufacturer's products per specified requirements. Manufacturer's willingness to sell its through-penetration firestop system products to Contractor or to Installer engaged by Contractor does not in itself confer qualification on buyer.**]

C. Installation Responsibility: Assign installation of through-penetration firestop systems [**and fire-resistive joint systems**]in Project to a single qualified installer.

D. Source Limitations: Obtain through-penetration firestop systems, for each kind of penetration and construction condition indicated, through one source from a single manufacturer.

E. Fire-Test-Response Characteristics: Provide through-penetration firestop systems that comply with the following requirements and those specified in Part 1 "Performance Requirements" Article:

1. Firestopping tests are performed by a qualified testing and inspecting agency. A qualified testing and inspecting agency is [**UL,**] [**OPL**] [**ITS,**] <**Insert name,**> or another agency performing testing and follow-up inspection services for firestop systems acceptable to authorities having jurisdiction.
2. Through-penetration firestop systems are identical to those tested per testing standard referenced in "Part 1 Performance Requirements" Article. Provide rated systems complying with the following requirements:

    a. Through-penetration firestop system products bear classification marking of qualified testing and inspecting agency.
    b. Through-penetration firestop systems correspond to those indicated by reference to through-penetration firestop system designations listed by the following:

        1) UL in its "Fire Resistance Directory."
        2) OPL in its "Directory of Listed Building Products, Materials, & Assemblies."
        3) ITS in its "Directory of Listed Products."
        4) <**Insert name of qualified testing and inspecting agency.**>

F. Preinstallation Conference: Conduct conference at Project site to comply with requirements in Division 1 Section "Project Management and Coordination."

1.6 DELIVERY, STORAGE, AND HANDLING

A. Deliver through-penetration firestop system products to Project site in original, unopened containers or packages with intact and legible manufacturers' labels identifying product and manufacturer, date of manufacture, lot number, shelf life if applicable, qualified testing and inspecting agency's classification marking applicable to Project, curing time, and mixing instructions for multicomponent materials.

B. Store and handle materials for through-penetration firestop systems to prevent their deterioration or damage due to moisture, temperature changes, contaminants, or other causes.

1.7 PROJECT CONDITIONS

A. Environmental Limitations: Do not install through-penetration firestop systems when ambient or substrate temperatures are outside limits permitted by through-penetration firestop system manufacturers or when substrates are wet due to rain, frost, condensation, or other causes.

B. Ventilate through-penetration firestop systems per manufacturer's written instructions by natural means or, where this is inadequate, forced-air circulation.

1.8 COORDINATION

A. Coordinate construction of openings and penetrating items to ensure that through-penetration firestop systems are installed according to specified requirements.

B. Coordinate sizing of sleeves, openings, core-drilled holes, or cut openings to accommodate through-penetration firestop systems.

C. Notify Owner's inspecting agency at least seven days in advance of through-penetration firestop system installations; confirm dates and times on days preceding each series of installations.

D. Do not cover up through-penetration firestop system installations that will become concealed behind other construction until each installation has been examined by[**Owner's inspecting agency and**] building inspector, if required by authorities having jurisdiction.

PART 2 - PRODUCTS

2.1 MANUFACTURERS

A. Available Products: Subject to compliance with requirements, through-penetration firestop systems that may be incorporated into the Work include, but are not limited to, those systems indicated [**in the Through-Penetration Firestop System Schedule**] [**at the end of Part 3**] [**on Drawings**] [**.**] [**that are produced by one of the following manufacturers:**]

B. Products: Subject to compliance with requirements, provide one of the through-penetration firestop systems indicated for each application [**in the Through-Penetration Firestop System Schedule**] [**at the end of Part 3**] [**on Drawings**] [**.**] [**that are produced by one of the following manufacturers:**]

1. A/D Fire Protection Systems Inc.
2. Grace, W. R. & Co. - Conn.
3. Hilti, Inc.
4. Johns Manville.
5. Nelson Firestop Products.
6. NUCO Inc.
7. RectorSeal Corporation (The).
8. Specified Technologies Inc.
9. 3M; Fire Protection Products Division.
10. Tremco; Sealant/Weatherproofing Division.
11. USG Corporation.
12. <**Insert manufacturer's name.**>

2.2 FIRESTOPPING, GENERAL

A. Compatibility: Provide through-penetration firestop systems that are compatible with one another; with the substrates forming openings; and with the items, if any, penetrating through-penetration firestop systems, under conditions of service and application, as demonstrated by through-penetration firestop system manufacturer based on testing and field experience.

B. Accessories: Provide components for each through-penetration firestop system that are needed to install fill materials and to comply with Part 1 "Performance Requirements" Article. Use only components specified by through-penetration firestop system manufacturer and approved by qualified testing and inspecting agency for firestop systems indicated.[**Accessories include, but are not limited to, the following items:**]

1. Permanent forming/damming/backing materials, including the following:

    a. Slag-/rock-wool-fiber insulation.
    b. Sealants used in combination with other forming/damming/backing materials to prevent leakage of fill materials in liquid state.
    c. Fire-rated form board.
    d. Fillers for sealants.

2. Temporary forming materials.
3. Substrate primers.
4. Collars.
5. Steel sleeves.

2.3 FILL MATERIALS

A. General: Provide through-penetration firestop systems containing the types of fill materials indicated in the Through-Penetration Firestop System Schedule at the end of Part 3 by referencing the types of materials described in this Article. Fill materials are those referred to in directories of referenced testing and inspecting agencies as "fill," "void," or "cavity" materials.

B. Cast-in-Place Firestop Devices: Factory-assembled devices for use in cast-in-place concrete floors and consisting of an outer metallic sleeve lined with an intumescent strip, a radial

extended flange attached to one end of the sleeve for fastening to concrete formwork, and a neoprene gasket.

C. Latex Sealants: Single-component latex formulations that after cure do not re-emulsify during exposure to moisture.

D. Firestop Devices: Factory-assembled collars formed from galvanized steel and lined with intumescent material sized to fit specific diameter of penetrant.

E. Intumescent Composite Sheets: Rigid panels consisting of aluminum-foil-faced elastomeric sheet bonded to galvanized steel sheet.

F. Intumescent Putties: Nonhardening dielectric, water-resistant putties containing no solvents, inorganic fibers, or silicone compounds.

G. Intumescent Wrap Strips: Single-component intumescent elastomeric sheets with aluminum foil on one side.

H. Mortars: Prepackaged dry mixes consisting of a blend of inorganic binders, hydraulic cement, fillers, and lightweight aggregate formulated for mixing with water at Project site to form a nonshrinking, homogeneous mortar.

I. Pillows/Bags: Reusable heat-expanding pillows/bags consisting of glass-fiber cloth cases filled with a combination of mineral-fiber, water-insoluble expansion agents, and fire-retardant additives.

J. Silicone Foams: Multicomponent, silicone-based liquid elastomers that, when mixed, expand and cure in place to produce a flexible, nonshrinking foam.

K. Silicone Sealants: Single-component, silicone-based, neutral-curing elastomeric sealants of grade indicated below:

1. Grade: Pourable (self-leveling) formulation for openings in floors and other horizontal surfaces, and nonsag formulation for openings in vertical and other surfaces requiring a nonslumping, gunnable sealant, unless indicated firestop system limits use to nonsag grade for both opening conditions.
2. Grade for Horizontal Surfaces: Pourable (self-leveling) formulation for openings in floors and other horizontal surfaces.
3. Grade for Vertical Surfaces: Nonsag formulation for openings in vertical and other surfaces.

2.4 MIXING

A. For those products requiring mixing before application, comply with through-penetration firestop system manufacturer's written instructions for accurate proportioning of materials, water (if required), type of mixing equipment, selection of mixer speeds, mixing containers, mixing time, and other items or procedures needed to produce products of uniform quality with optimum performance characteristics for application indicated.

PART 3 - EXECUTION

3.1 EXAMINATION

A. Examine substrates and conditions, with Installer present, for compliance with requirements for opening configurations, penetrating items, substrates, and other conditions affecting performance of work.

1. Proceed with installation only after unsatisfactory conditions have been corrected.

3.2 PREPARATION

A. Surface Cleaning: Clean out openings immediately before installing through-penetration firestop systems to comply with firestop system manufacturer's written instructions and with the following requirements:

1. Remove from surfaces of opening substrates and from penetrating items foreign materials that could interfere with adhesion of through-penetration firestop systems.
2. Clean opening substrates and penetrating items to produce clean, sound surfaces capable of developing optimum bond with through-penetration firestop systems. Remove loose particles remaining from cleaning operation.
3. Remove laitance and form-release agents from concrete.

B. Priming: Prime substrates where recommended in writing by through-penetration firestop system manufacturer using that manufacturer's recommended products and methods. Confine primers to areas of bond; do not allow spillage and migration onto exposed surfaces.

C. Masking Tape: Use masking tape to prevent through-penetration firestop systems from contacting adjoining surfaces that will remain exposed on completion of Work and that would otherwise be permanently stained or damaged by such contact or by cleaning methods used to remove smears from firestop system materials. Remove tape as soon as possible without disturbing firestop system's seal with substrates.

3.3 THROUGH-PENETRATION FIRESTOP SYSTEM INSTALLATION

A. General: Install through-penetration firestop systems to comply with Part 1 "Performance Requirements" Article and with firestop system manufacturer's written installation instructions and published drawings for products and applications indicated.

B. Install forming/damming/backing materials and other accessories of types required to support fill materials during their application and in the position needed to produce cross-sectional shapes and depths required to achieve fire ratings indicated.

1. After installing fill materials and allowing them to fully cure, remove combustible forming materials and other accessories not indicated as permanent components of firestop systems.

C. Install fill materials for firestop systems by proven techniques to produce the following results:

1. Fill voids and cavities formed by openings, forming materials, accessories, and penetrating items as required to achieve fire-resistance ratings indicated.
2. Apply materials so they contact and adhere to substrates formed by openings and penetrating items.
3. For fill materials that will remain exposed after completing Work, finish to produce smooth, uniform surfaces that are flush with adjoining finishes.

3.4 IDENTIFICATION

A. Identify through-penetration firestop systems with preprinted metal or plastic labels. Attach labels permanently to surfaces adjacent to and within 6 inches (150 mm) of edge of the firestop systems so that labels will be visible to anyone seeking to remove penetrating items or firestop systems. Use mechanical fasteners for metal labels. For plastic labels, use self-adhering type with adhesives capable of permanently bonding labels to surfaces on which labels are placed and, in combination with label material, will result in partial destruction of label if removal is attempted. Include the following information on labels:

1. The words "Warning - Through-Penetration Firestop System - Do Not Disturb. Notify Building Management of Any Damage."
2. Contractor's name, address, and phone number.
3. Through-penetration firestop system designation of applicable testing and inspecting agency.
4. Date of installation.
5. Through-penetration firestop system manufacturer's name.
6. Installer's name.

3.5 FIELD QUALITY CONTROL

A. Inspecting Agency: Owner will engage a qualified, independent inspecting agency to inspect through-penetration firestops. Independent inspecting agency shall comply with ASTM E 2174 requirements including those related to qualifications, conducting inspections, and preparing test reports.

B. Where deficiencies are found, repair or replace through-penetration firestop systems so they comply with requirements.

C. Proceed with enclosing through-penetration firestop systems with other construction only after inspection reports are issued and firestop installations comply with requirements.

3.6 CLEANING AND PROTECTING

A. Clean off excess fill materials adjacent to openings as Work progresses by methods and with cleaning materials that are approved in writing by through-penetration firestop system manufacturers and that do not damage materials in which openings occur.

B. Provide final protection and maintain conditions during and after installation that ensure that through-penetration firestop systems are without damage or deterioration at time of Substantial Completion. If, despite such protection, damage or deterioration occurs, cut out and remove

damaged or deteriorated through-penetration firestop systems immediately and install new materials to produce systems complying with specified requirements.

3.7 THROUGH-PENETRATION FIRESTOP SYSTEM SCHEDULE

A. Where UL-classified systems are indicated, they refer to alpha-alpha-numeric designations listed in UL's "Fire Resistance Directory" under product Category XHEZ.

B. Where OPL-classified systems are indicated, they refer to alpha-numeric design numbers in OPL's "Directory of Listed Building Products, Materials, & Assemblies."

C. Where ITS-listed systems are indicated, they refer to design numbers listed in ITS's "Directory of Listed Products," "Firestop Systems" Section.

D. Firestop Systems with No Penetrating Items[**FS-**<**#**>]:

1. [**Available**]UL-Classified Systems: [**C-AJ-**] [**C-BJ-**] [**F-A-**] [**W-J-**] [**W-L-**] <**Insert one or more four-digit numbers**> [**0001-0999**].
2. [**Available**]OPL-Classified Systems: FS <**Insert one or more OPL design numbers**> [**F**] [**W**], Penetrating Item Type G.
3. [**Available**]ITS-Listed Systems: <**Insert ITS design number(s).**>
4. Type of Fill Materials: One or more of the following:

    a. Latex sealant.
    b. Silicone sealant.
    c. Intumescent putty.
    d. Mortar.

E. Firestop Systems for Metallic Pipes, Conduit, or Tubing[**FS-**<**#**>]:

1. [**Available**]UL-Classified Systems: [**C-AJ-**] [**C-BJ-**] [**C-BK-**] [**F-A-**] [**F-B-**] [**F-C-**] [**W-J-**] [**W-K-**] [**W-L-**] <**Insert one or more four-digit numbers**> [**1001-1999**].
2. [**Available**]OPL-Classified Systems: FS <**Insert one or more OPL design numbers**> [**F**] [**W**], Penetrating Item Type A.
3. [**Available**]ITS-Listed Systems: <**Insert ITS design number(s).**>
4. Type of Fill Materials: One or more of the following:

    a. Latex sealant.
    b. Silicone sealant.
    c. Intumescent putty.
    d. Mortar.

F. Firestop Systems for Nonmetallic Pipe, Conduit, or Tubing[**FS-**<**#**>]:

1. [**Available**]UL-Classified Systems: [**C-AJ-**] [**C-BJ-**] [**F-A-**] [**F-B-**] [**F-C-**] [**W-J-**] [**W-L-**] <**Insert one or more four-digit numbers**> [**2001-2999**].
2. [**Available**]OPL-Classified Systems: FS <**Insert one or more OPL design numbers**> [**F**] [**W**], Penetrating Item Type B.
3. [**Available**]ITS-Listed Systems: <**Insert ITS design number(s).**>
4. Type of Fill Materials: One or more of the following:

a. Latex sealant.
b. Silicone sealant.
c. Intumescent putty.
d. Intumescent wrap strips.
e. Firestop device.

G. Firestop Systems for Electrical Cables[**FS-**<#>]:

1. [**Available**]UL-Classified Systems: [**C-AJ-**] [**C-BJ-**] [**F-A-**] [**F-B-**] [**F-C-**] [**W-J-**] [**W-L-**] <**Insert one or more four-digit numbers**> [**3001-3999**].
2. [**Available**]OPL-Classified Systems: FS <**Insert one or more OPL design numbers**> [**F**] [**W**], Penetrating Item Type D.
3. [**Available**]ITS-Listed Systems: <**Insert ITS design number(s).**>
4. Type of Fill Materials: One or more of the following:

a. Latex sealant.
b. Silicone sealant.
c. Intumescent putty.
d. Silicone foam.
e. Pillows/bags.

H. Firestop Systems for Cable Trays[**FS-**<#>]:

1. [**Available**]UL-Classified Systems: [**C-AJ-**] [**C-BJ-**] [**F-A-**] [**F-B-**] [**F-C-**] [**W-J-**] [**W-K-**] [**W-L-**] <**Insert one or more four-digit numbers**> [**4001-4999**].
2. [**Available**]OPL-Classified Systems: FS <**Insert one or more OPL design numbers**> [**F**] [**W**], Penetrating Item Type D.
3. [**Available**]ITS-Listed Systems: <**Insert ITS design number(s).**>
4. Type of Fill Materials: One or more of the following:

a. Latex sealant.
b. Intumescent putty.
c. Silicone foam.
d. Pillows/bags.
e. Mortar.

I. Firestop Systems for Insulated Pipes[**FS-**<#>]:

1. [**Available**]UL-Classified Systems: [**C-AJ-**] [**C-BJ-**] [**F-A-**] [**F-C-**] [**W-J-**] [**W-L-**] <**Insert one or more four-digit numbers**> [**5001-5999**].
2. [**Available**]OPL-Classified Systems: FS <**Insert one or more OPL design numbers**> [**F**] [**W**], Penetrating Item Type C.
3. [**Available**]ITS-Listed Systems: <**Insert ITS design number(s).**>
4. Type of Fill Materials: One or more of the following:

a. Latex sealant.
b. Intumescent putty.
c. Silicone foam.
d. Intumescent wrap strips.

J. Firestop Systems for Miscellaneous Electrical Penetrants[**FS-**<#>]:

1. [**Available**]UL-Classified Systems: [**C-AJ-**] [**F-A-**] [**W-L-**] <**Insert one or more four-digit numbers**> [**6001-6999**].
2. [**Available**]OPL-Classified Systems: FS <**Insert one or more OPL design numbers**> [**F**] [**W**], Penetrating Item Type E.
3. [**Available**]ITS-Listed Systems: <**Insert ITS design number(s).**>
4. Type of Fill Materials: One or more of the following:

    a. Latex sealant.
    b. Intumescent putty.
    c. Mortar.

K. Firestop Systems for Miscellaneous Mechanical Penetrants[**FS-**<**#**>]:

1. [**Available**]UL-Classified Systems: [**C-AJ-**] [**F-C-**] [**W-J-**] [**W-L-**] <**Insert one or more four-digit numbers**> [**7001-7999**].
2. [**Available**]ITS-Listed Systems: <**Insert ITS design number(s).**>
3. Type of Fill Materials: One or both of the following:

    a. Latex sealant.
    b. Mortar.

L. Firestop Systems for Groupings of Penetrants[**FS-**<**#**>]:

1. [**Available**]UL-Classified Systems: [**C-AJ-**] [**C-BJ-**] [**F-A-**] [**F-C-**] [**W-J-**] [**W-L-**] <**Insert one or more four-digit numbers**> [**8001-8999**].
2. [**Available**]ITS-Listed Systems: <**Insert ITS design number(s).**>
3. Type of Fill Materials: One or more of the following:

    a. Latex sealant.
    b. Mortar.
    c. Intumescent wrap strips.
    d. Firestop device.
    e. Intumescent composite sheet.

END OF SECTION 07841

SECTION 07920 - JOINT SEALANTS

PART 1 - GENERAL

1.1 RELATED DOCUMENTS

A. Drawings and general provisions of the Contract, including General and Supplementary Conditions and Division 1 Specification Sections, apply to this Section.

1.2 SUMMARY

A. This Section includes joint sealants for the [**applications indicated in the Joint-Sealant Schedule at the end of Part 3.**] [**following applications, including those specified by reference to this Section:**] [**following applications:**]

1. Exterior joints in the following vertical surfaces and horizontal nontraffic surfaces:

a. Construction joints in cast-in-place concrete.
b. Joints between plant-precast architectural concrete units.
c. Control and expansion joints in unit masonry.
d. Joints in dimension stone cladding.
e. Joints in glass unit masonry assemblies.
f. Joints in exterior insulation and finish systems.
g. Joints between metal panels.
h. Joints between different materials listed above.
i. Perimeter joints between materials listed above and frames of [**doors**] [**windows**] [**and**] [**louvers**].
j. Control and expansion joints in [**ceilings**] [**and other**] [**overhead surfaces**].
k. <**Insert other exterior joints in vertical surfaces and horizontal nontraffic surfaces.**>
l. Other joints as indicated.

2. Exterior joints in the following horizontal traffic surfaces:

a. Control and expansion joints in brick pavers.
b. Isolation and contraction joints in cast-in-place concrete slabs.
c. Joints between plant-precast architectural concrete paving units.
d. Joints in stone paving units[**, including steps**].
e. Tile control and expansion joints.
f. Joints between different materials listed above.
g. <**Insert other exterior joints in horizontal traffic surfaces.**>
h. Other joints as indicated.

3. Interior joints in the following vertical surfaces and horizontal nontraffic surfaces:

a. Control and expansion joints on exposed interior surfaces of exterior walls.
b. Perimeter joints of exterior openings where indicated.

c. Tile control and expansion joints.
d. Vertical joints on exposed surfaces of [**interior unit masonry**] [**concrete**] [**walls**] [**and**] [**partitions**].
e. Joints on underside of plant-precast structural concrete [**beams**] [**and**] [**planks**].
f. Perimeter joints between interior wall surfaces and frames of [**interior doors**] [**windows**] [**and**] [**elevator entrances**].
g. Joints between plumbing fixtures and adjoining walls, floors, and counters.
h. <**Insert other interior joints in vertical surfaces and horizontal nontraffic surfaces.**>
i. Other joints as indicated.

4. Interior joints in the following horizontal traffic surfaces:

a. Isolation joints in cast-in-place concrete slabs.
b. Control and expansion joints in stone flooring.
c. Control and expansion joints in brick flooring.
d. Control and expansion joints in tile flooring.
e. <**Insert other interior joints in horizontal traffic surfaces.**>
f. Other joints as indicated.

B. Related Sections include the following:

1. Division 1 Section "LEED Requirements" for additional LEED requirements.
2. Division 2 Section "Pavement Joint Sealants" for sealing joints in pavements, walkways, and curbing.
3. Division 4 Section "Unit Masonry Assemblies" for masonry control and expansion joint fillers and gaskets.
4. Division 7 Section "Fire-Resistive Joint Systems" for sealing joints in fire-resistance-rated construction.
5. Division 8 Section "Glazing" for glazing sealants.
6. Division 8 Section "Plastic Glazing" for plastic glazing sealants.
7. Division 8 Section "Structural-Sealant-Glazed Curtain Walls" for structural and other glazing sealants.
8. Division 9 Section "Gypsum Veneer Plaster" for sealing perimeter joints of gypsum veneer plaster partitions to reduce sound transmission.
9. Division 9 Section "Gypsum Board Assemblies" for sealing perimeter joints of gypsum board partitions to reduce sound transmission.
10. Division 9 Section "Ceramic Tile" for sealing tile joints.
11. Division 9 Section [**"Acoustical Panel Ceilings"**] [**and**] [**"Acoustical Tile Ceilings"**] for sealing edge moldings at perimeters of acoustical ceilings.
12. Division 9 Section "Chemical-Resistant Brick Flooring" for sealing flooring joints.

1.3 PERFORMANCE REQUIREMENTS

A. Provide elastomeric joint sealants that establish and maintain watertight and airtight continuous joint seals without staining or deteriorating joint substrates.

B. Provide joint sealants for interior applications that establish and maintain airtight and water-resistant continuous joint seals without staining or deteriorating joint substrates.

1.4 SUBMITTALS

A. Product Data: For each joint-sealant product indicated.

B. Samples for Initial Selection: Manufacturer's color charts consisting of strips of cured sealants showing the full range of colors available for each product exposed to view.

C. Samples for Verification: For each type and color of joint sealant required, provide Samples with joint sealants in 1/2-inch- (13-mm-) wide joints formed between two 6-inch- (150-mm-) long strips of material matching the appearance of exposed surfaces adjacent to joint sealants.

D. LEED Submittals:

1. Credit EQ 4.1: Manufacturers' product data for interior sealants, including printed statement of VOC content.

E. Product Certificates: For each type of joint sealant and accessory, signed by product manufacturer.

F. SWRI Validation Certificate: For each elastomeric sealant specified to be validated by SWRI's Sealant Validation Program.

G. Qualification Data: For [**Installer**] [**and**] [**testing agency**].

H. Preconstruction Field Test Reports: Indicate which sealants and joint preparation methods resulted in optimum adhesion to joint substrates based on preconstruction testing specified in "Quality Assurance" Article.

I. Compatibility and Adhesion Test Reports: From sealant manufacturer, indicating the following:

1. Materials forming joint substrates and joint-sealant backings have been tested for compatibility and adhesion with joint sealants.
2. Interpretation of test results and written recommendations for primers and substrate preparation needed for adhesion.

J. Field Test Report Log: For each elastomeric sealant application.

K. Product Test Reports: Based on comprehensive testing of product formulations performed by a qualified testing agency, indicating that sealants comply with requirements.

L. Warranties: Special warranties specified in this Section.

1.5 QUALITY ASSURANCE

A. Installer Qualifications: Manufacturer's authorized Installer who is approved or licensed for installation of elastomeric sealants required for this Project.

B. Source Limitations: Obtain each type of joint sealant through one source from a single manufacturer.

C. Preconstruction Compatibility and Adhesion Testing: Submit to joint-sealant manufacturers, for testing indicated below, samples of materials that will contact or affect joint sealants.

1. Use [**ASTM C 1087**] [**manufacturer's standard test method**] to determine whether priming and other specific joint preparation techniques are required to obtain rapid, optimum adhesion of joint sealants to joint substrates.
2. Submit not fewer than [**eight**] <**Insert number**> pieces of each type of material, including joint substrates, shims, joint-sealant backings, secondary seals, and miscellaneous materials.
3. Schedule sufficient time for testing and analyzing results to prevent delaying the Work.
4. For materials failing tests, obtain joint-sealant manufacturer's written instructions for corrective measures including use of specially formulated primers.
5. Testing will not be required if joint-sealant manufacturers submit joint preparation data that are based on previous testing of current sealant products for adhesion to, and compatibility with, joint substrates and other materials matching those submitted.

D. Product Testing: Obtain test results for "Product Test Reports" Paragraph in "Submittals" Article from a qualified testing agency based on testing current sealant formulations within a 36-month period preceding the [**Notice to Proceed with**] [**commencement of**] the Work.

1. Testing Agency Qualifications: An independent testing agency qualified according to ASTM C 1021 to conduct the testing indicated, as documented according to ASTM E 548.
2. Test elastomeric joint sealants for compliance with requirements specified by reference to ASTM C 920, and where applicable, to other standard test methods.
3. Test elastomeric joint sealants according to SWRI's Sealant Validation Program for compliance with requirements specified by reference to ASTM C 920 for adhesion and cohesion under cyclic movement, adhesion-in-peel, and indentation hardness.
4. Test other joint sealants for compliance with requirements indicated by referencing standard specifications and test methods.

E. Preconstruction Field-Adhesion Testing: Before installing elastomeric sealants, field test their adhesion to Project joint substrates as follows:

1. Locate test joints where indicated on Project or, if not indicated, as directed by Architect.
2. Conduct field tests for each application indicated below:

    a. Each type of elastomeric sealant and joint substrate indicated.
    b. Each type of nonelastomeric sealant and joint substrate indicated.

3. Notify Architect seven days in advance of dates and times when test joints will be erected.
4. Arrange for tests to take place with joint-sealant manufacturer's technical representative present.

    a. Test Method: Test joint sealants according to Method A, Field-Applied Sealant Joint Hand Pull Tab, in Appendix X1 in ASTM C 1193.

        1) For joints with dissimilar substrates, verify adhesion to each substrate separately; extend cut along one side, verifying adhesion to opposite side. Repeat procedure for opposite side.

5. Report whether sealant in joint connected to pulled-out portion failed to adhere to joint substrates or tore cohesively. Include data on pull distance used to test each type of product and joint substrate. For sealants that fail adhesively, retest until satisfactory adhesion is obtained.
6. Evaluation of Preconstruction Field-Adhesion-Test Results: Sealants not evidencing adhesive failure from testing, in absence of other indications of noncompliance with requirements, will be considered satisfactory. Do not use sealants that fail to adhere to joint substrates during testing.

F. Mockups: Build mockups incorporating sealant joints, as follows, to verify selections made under sample submittals and to demonstrate aesthetic effects and set quality standards for materials and execution:

1. Joints in mockups of assemblies specified in other Sections that are indicated to receive elastomeric joint sealants, which are specified by reference to this Section.

G. Preinstallation Conference: Conduct conference at Project site to comply with requirements in Division 1 Section "Project Management and Coordination."

1.6 PROJECT CONDITIONS

A. Do not proceed with installation of joint sealants under the following conditions:

1. When ambient and substrate temperature conditions are outside limits permitted by joint-sealant manufacturer[**or are below 40 deg F (5 deg C)**].
2. When joint substrates are wet.
3. Where joint widths are less than those allowed by joint-sealant manufacturer for applications indicated.
4. Contaminants capable of interfering with adhesion have not yet been removed from joint substrates.

1.7 WARRANTY

A. Special Installer's Warranty: Installer's standard form in which Installer agrees to repair or replace elastomeric joint sealants that do not comply with performance and other requirements specified in this Section within specified warranty period.

1. Warranty Period: [**Two**] <**Insert number**> years from date of Substantial Completion.

B. Special Manufacturer's Warranty: Manufacturer's standard form in which elastomeric sealant manufacturer agrees to furnish elastomeric joint sealants to repair or replace those that do not comply with performance and other requirements specified in this Section within specified warranty period.

1. Warranty Period: <**Insert number**> years from date of Substantial Completion.

C. Special warranties specified in this Article exclude deterioration or failure of elastomeric joint sealants from the following:

1. Movement of the structure resulting in stresses on the sealant exceeding sealant manufacturer's written specifications for sealant elongation and compression caused by structural settlement or errors attributable to design or construction.
2. Disintegration of joint substrates from natural causes exceeding design specifications.
3. Mechanical damage caused by individuals, tools, or other outside agents.
4. Changes in sealant appearance caused by accumulation of dirt or other atmospheric contaminants.

PART 2 - PRODUCTS

2.1 MANUFACTURERS

A. Available Products: Subject to compliance with requirements, products that may be incorporated into the Work include, but are not limited to, products listed in other Part 2 articles.

B. Products: Subject to compliance with requirements, provide one of the products listed in other Part 2 articles.

2.2 MATERIALS, GENERAL

A. Compatibility: Provide joint sealants, backings, and other related materials that are compatible with one another and with joint substrates under conditions of service and application, as demonstrated by sealant manufacturer, based on testing and field experience.

B. VOC Content of Interior Sealants: Provide interior sealants and sealant primers that comply with the following limits for VOC content when calculated according to 40 CFR 59, Subpart D (EPA Method 24):

1. Sealants: 250 g/L.
2. Sealant Primers for Nonporous Substrates: 250 g/L.
3. Sealant Primers for Porous Substrates: 775 g/L.

C. Colors of Exposed Joint Sealants: [**As indicated by manufacturer's designations**] [**Match Architect's samples**] [**As selected by Architect from manufacturer's full range**].

2.3 ELASTOMERIC JOINT SEALANTS

A. Elastomeric Sealants: Comply with ASTM C 920 and other requirements indicated for each liquid-applied chemically curing sealant specified, including those referencing ASTM C 920 classifications for type, grade, class, and uses related to exposure and joint substrates.

B. Stain-Test-Response Characteristics: Where elastomeric sealants are specified to be nonstaining to porous substrates, provide products that have undergone testing according to ASTM C 1248 and have not stained porous joint substrates indicated for Project.

C. Suitability for Immersion in Liquids. Where elastomeric sealants are indicated for Use I for joints that will be continuously immersed in liquids, provide products that have undergone

testing according to ASTM C 1247 and qualify for the length of exposure indicated by reference to ASTM C 920 for Class 1 or 2. Liquid used for testing sealants is deionized water, unless otherwise indicated.

D. Suitability for Contact with Food: Where elastomeric sealants are indicated for joints that will come in repeated contact with food, provide products that comply with 21 CFR 177.2600.

E. Multicomponent Nonsag Polysulfide Sealant [**ES-**<**#**>]:

1. [**Available**]Products:

    a. Pacific Polymers, Inc.; Elasto-Seal 227 Type II (Gun Grade).
    b. Pecora Corporation; Synthacalk GC-2+.
    c. Polymeric Systems Inc.; PSI-350.
    d. PolySpec Corp.; T-2235-M.
    e. PolySpec Corp.; T-2282.
    f. PolySpec Corp.; Thiokol 2P.
    g. Sonneborn, Division of ChemRex Inc.; Sonolastic Polysulfide Sealant.
    h. <**Insert manufacturer's name; product.**>

2. Type and Grade: M (multicomponent) and NS (nonsag).
3. Class: 25.
4. Use[**s**] Related to Exposure: [**T (traffic)**] [**NT (nontraffic)**] [**T (traffic) and NT (nontraffic)**].
5. Uses Related to Joint Substrates: M, G, A, and, as applicable to joint substrates indicated, O.

    a. Use O Joint Substrates: [**Coated glass**] [**color anodic aluminum**] [**aluminum coated with a high-performance coating**] [**galvanized steel**] [**brick**] [**granite**] [**limestone**] [**marble**] [**ceramic tile**] [**wood**] [**and**] <**Insert other Use O substrates**>.

F. Multicomponent Nonsag Immersible Polysulfide Sealant [**ES-**<**#**>]:

1. [**Available**]Products:

    a. Pecora Corporation; GC-2+.
    b. PolySpec Corp.; T-2235-M.
    c. <**Insert manufacturer's name; product.**>

2. Type and Grade: M (multicomponent) and NS (nonsag).
3. Class: 25.
4. Uses Related to Exposure: T (traffic), NT (nontraffic), and I (immersible), Class [**1**] [**2**].
5. Uses Related to Joint Substrates: M, G, A, and, as applicable to joint substrates indicated, O.

    a. Use O Joint Substrates: [**Coated glass**] [**galvanized steel**] [**brick**] [**and**] <**Insert other Use O substrates**>.

G. Multicomponent Pourable Polysulfide Sealant [**ES-**<**#**>]:

1. [**Available**]Products:

    a. Meadows, W. R., Inc.; Deck-O-Seal.
    b. Pacific Polymers, Inc.; Elastoseal 227 Type I (Pourable).
    c. <**Insert manufacturer's name; product.**>

2. Type and Grade: M (multicomponent) and P (pourable).
3. Class: 25.
4. Uses Related to Exposure: T (traffic) and NT (nontraffic).
5. Uses Related to Joint Substrates: M, [**G,**] [**A,**] and, as applicable to joint substrates indicated, O.

    a. Use O Joint Substrates: [**Brick**] [**granite**] [**limestone**] [**marble**] [**ceramic tile**] [**wood**] [**and**] <**Insert other Use O substrates**>.

H. Single-Component Nonsag Polysulfide Sealant [**ES-**<#>]:

1. [**Available**]Products:

    a. Pacific Polymers, Inc.; Elastoseal 230 Type I (Gun Grade).
    b. Polymeric Systems Inc.; PSI-7000.
    c. <**Insert manufacturer's name; product.**>

2. Type and Grade: S (single component) and NS (nonsag).
3. Class: 25.
4. Use Related to Exposure: NT (nontraffic).
5. Uses Related to Joint Substrates: M, G, A, and, as applicable to joint substrates indicated, O.

    a. Use O Joint Substrates: [**Coated glass**] [**color anodic aluminum**] [**aluminum coated with a high-performance coating**] [**galvanized steel**] [**brick**] [**granite**] [**limestone**] [**marble**] [**ceramic tile**] [**wood**] [**and**] <**Insert other Use O substrates**>.

I. Multicomponent Nonsag Neutral-Curing Silicone Sealant [**ES-**<#>]:

1. [**Available**]Products:

    a. Dow Corning Corporation; 756 H.P.
    b. <**Insert manufacturer's name; product.**>

2. Type and Grade: M (multicomponent) and P (pourable).
3. Class: 50.
4. Use Related to Exposure: NT (nontraffic).
5. Uses Related to Joint Substrates: M, G, A, and, as applicable to joint substrates indicated, O.

    a. Use O Joint Substrates: [**Coated glass**] [**color anodic aluminum**] [**aluminum coated with a high-performance coating**] [**galvanized steel**] [**brick**] [**limestone**] [**marble**] [**granite**] [**ceramic tile**] [**and**] <**Insert other Use O substrates**>.

J. Multicomponent Pourable Neutral-Curing Silicone Sealant [**ES-**<#>]:

1. [**Available**]Products:

    a. Dow Corning Corporation; FC Parking Structure Sealant.
    b. <**Insert manufacturer's name; product.**>

2. Type and Grade: M (multicomponent) and P (pourable).
3. Class: 25.
4. Uses Related to Exposure: T (traffic) and NT (nontraffic).
5. Uses Related to Joint Substrates: M, A, and, as applicable to joint substrates indicated, O.

    a. Use O Joint Substrates: [**Galvanized steel**] [**brick**] [**limestone**] [**marble**] [**granite**] [**ceramic tile**] [**and**] <**Insert other Use O substrates**>.

K. Single-Component Pourable Neutral-Curing Silicone Sealant [**ES-**<#>]:

1. [**Available**]Products:

    a. Dow Corning Corporation; 890-SL.
    b. Pecora Corporation; 300 Pavement Sealant (Self Leveling).
    c. <**Insert manufacturer's name; product.**>
    d. Dow Corning Corporation; SL Parking Structure Sealant.
    e. <**Insert manufacturer's name; product.**>

2. Type and Grade: S (single component) and P (pourable).
3. Class: 100/50.
4. Use[**s**] Related to Exposure: NT [**and**] [**T (traffic)**].
5. Uses Related to Joint Substrates: [**M**] [**A**] [**and**] O, as applicable to joint substrates indicated.

    a. Use O Joint Substrates: [**Galvanized steel**] [**brick**] [**limestone**] [**marble**] [**granite**] [**ceramic tile**] [**and**] <**Insert other Use O substrates**>.

L. Single-Component [**Neutral- and Basic-Curing**] [**Neutral-Curing**] Silicone Sealant [**ES-**<#>]:

1. [**Available**]Products:

    a. Dow Corning Corporation; 790.
    b. GE Silicones; SilPruf LM SCS2700.
    c. Tremco; Spectrem 1 (Basic).
    d. <**Insert manufacturer's name; product.**>
    e. GE Silicones; SilPruf SCS2000.
    f. Pecora Corporation; 864.
    g. Pecora Corporation; 890.
    h. Polymeric Systems Inc.; PSI-641.
    i. Sonneborn, Division of ChemRex Inc.; Omniseal.
    j. Tremco; Spectrem 3.
    k. <**Insert manufacturer's name; product.**>
    l. Dow Corning Corporation; 791.

m. Dow Corning Corporation; 795
n. GE Silicones; SilPruf NB SCS9000.
o. GE Silicones; UltraPruf II SCS2900.
p. Pecora Corporation; 865.
q. Pecora Corporation; 895.
r. Pecora Corporation; 898.
s. <**Insert manufacturer's name; product.**>

2. Type and Grade: S (single component) and NS (nonsag).
3. Class: [**50**] [**100/50**].
4. Use Related to Exposure: NT (nontraffic).
5. Uses Related to Joint Substrates: M, G, A, and, as applicable to joint substrates indicated, O.

    a. Use O Joint Substrates: [**Coated glass**] [**color anodic aluminum**] [**aluminum coated with a high-performance coating**] [**galvanized steel**] [**brick**] [**granite**] [**limestone**] [**marble**] [**ceramic tile**] [**wood**] [**and**] <**Insert other Use O substrates**>.

6. Stain-Test-Response Characteristics: Nonstaining to porous substrates per ASTM C 1248.

M. Single-Component Neutral-Curing Silicone Sealant [**ES-**<#>]:

1. [**Available**]Products:

    a. Dow Corning Corporation; 799.
    b. GE Silicones; UltraGlaze SSG4000.
    c. GE Silicones; UltraGlaze SSG4000AC.
    d. Polymeric Systems Inc.; PSI-631.
    e. Schnee-Morehead, Inc.; SM5731 Poly-Glaze Plus.
    f. Tremco; Proglaze SG.
    g. Tremco; Spectrem 2.
    h. Tremco; Tremsil 600.
    i. <**Insert manufacturer's name; product.**>

2. Type and Grade: S (single component) and NS (nonsag).
3. Class: 25.
4. Use Related to Exposure: NT (nontraffic).
5. Uses Related to Joint Substrates: [**M,**]G, A, and, as applicable to joint substrates indicated, O.

    a. Use O Joint Substrates: [**Coated glass**] [**color anodic aluminum**] [**aluminum coated with a high-performance coating**] [**galvanized steel**] [**ceramic tile**] [**and**] <**Insert other Use O substrates**>.

N. Single-Component Acid-Curing Silicone Sealant [**ES-**<#>]:

1. [**Available**]Products:

    a. Bostik Findley; Chem-Calk 1200.

b. Dow Corning Corporation; 999-A.
c. Dow Corning Corporation; Trademate Glazing.
d. GE Silicones; Construction SCS1200.
e. GE Silicones; Contractors SCS1000.
f. GE Silicones; Sanitary SCS1700.
g. Pecora Corporation; 860.
h. Polymeric Systems Inc.; PSI-601.
i. Polymeric Systems Inc.; PSI-613.
j. Schnee-Morehead, Inc.; SM5732 Polyglaze.
k. Sonneborn, Division of ChemRex Inc.; OmniPlus.
l. Tremco; Proglaze.
m. Tremco; Tremsil 200.
n. <**Insert manufacturer's name; product.**>

2. Type and Grade: S (single component) and NS (nonsag).
3. Class: 25.
4. Use Related to Exposure: NT (nontraffic).
5. Uses Related to Joint Substrates: G, A, and, as applicable to joint substrates indicated, O.

a. Use O Joint Substrates: [**Coated glass**] [**color anodic aluminum**] [**aluminum coated with a high-performance coating**] [**galvanized steel**] [**ceramic tile**] [**and**] <**Insert other Use O substrates**>.

O. Single-Component Mildew-Resistant Neutral-Curing Silicone Sealant[**ES-**<**#**>]:

1. [**Available**]Products:

a. Pecora Corporation; 898.
b. Tremco; Tremsil 600 White.
c. <**Insert manufacturer's name; product.**>

2. Type and Grade: S (single component) and NS (nonsag).
3. Class: 25.
4. Use Related to Exposure: NT (nontraffic).
5. Uses Related to Joint Substrates: [**M,**]G, A, and, as applicable to joint substrates indicated, O.

a. Use O Joint Substrates: [**Coated glass**] [**color anodic aluminum**] [**aluminum coated with a high-performance coating**] [**galvanized steel**] [**ceramic tile**] [**and**] <**Insert other Use O substrates**>.

P. Single-Component Mildew-Resistant Acid-Curing Silicone Sealant [**ES-**<**#**>]:

1. [**Available**]Products:

a. Dow Corning Corporation; 786 Mildew Resistant.
b. GE Silicones; Sanitary SCS1700.
c. Tremco; Tremsil 200 [**White**] [**Clear**].
d. <**Insert manufacturer's name; product.**>

2. Type and Grade: S (single component) and NS (nonsag).

3. Class: 25.
4. Use Related to Exposure: NT (nontraffic).
5. Uses Related to Joint Substrates: G, A, and, as applicable to joint substrates indicated, O.

    a. Use O Joint Substrates: [**Coated glass**] [**color anodic aluminum**] [**aluminum coated with a high-performance coating**] [**ceramic tile**] [**and**] <**Insert other Use O substrates**>.

Q. Multicomponent Nonsag Urethane Sealant [**ES-**<**#**>]:

1. [**Available**]Products:

    a. Pecora Corporation; Dynatrol II.
    b. Tremco; Dymeric 511.
    c. Tremco; Vulkem 922.
    d. <**Insert manufacturer's name; product.**>

2. Type and Grade: M (multicomponent) and NS (nonsag).
3. Class: 50.
4. Use[**s**] Related to Exposure: NT (nontraffic) [**and**] [**T (traffic)**].
5. Uses Related to Joint Substrates: M, [**G,**]A, and, as applicable to joint substrates indicated, O.

    a. Use O Joint Substrates: [**Color anodic aluminum**] [**aluminum coated with a high-performance coating**] [**galvanized steel**] [**brick**] [**granite**] [**limestone**] [**marble**] [**ceramic tile**] [**wood**] [**and**] <**Insert other Use O substrates**>.

R. Multicomponent Nonsag Urethane Sealant [**ES-**<**#**>]:

1. [**Available**]Products:

    a. Schnee-Morehead, Inc.; Permathane SM 7200.
    b. Sika Corporation, Inc.; Sikaflex - 2c NS TG.
    c. Sonneborn, Division of ChemRex Inc.; NP 2.
    d. Tremco; Vulkem 227.
    e. Tremco; Vulkem 322 DS.
    f. <**Insert manufacturer's name; product.**>

2. Type and Grade: M (multicomponent) and NS (nonsag).
3. Class: 25.
4. Uses Related to Exposure: T (traffic) and NT (nontraffic).
5. Uses Related to Joint Substrates: M, [**G,**]A, and, as applicable to joint substrates indicated, O.

    a. Use O Joint Substrates: [**Color anodic aluminum**] [**aluminum coated with a high-performance coating**] [**galvanized steel**] [**brick**] [**granite**] [**limestone**] [**marble**] [**ceramic tile**] [**wood**] [**and**] <**Insert other Use O substrates**>.

S. Multicomponent Nonsag Urethane Sealant [**ES-**<**#**>]:

1. [**Available**]Products:

a. Bostik Findley; Chem-Calk 500.
b. Pacific Polymers, Inc.; Elasto-Thane 227 R Type II (Gun Grade).
c. Polymeric Systems Inc.; PSI-270.
d. Tremco; Dymeric.
e. <**Insert manufacturer's name; product.**>

2. Type and Grade: M (multicomponent) and NS (nonsag).
3. Class: 25.
4. Additional Movement Capability: 40 percent movement in extension and 25 percent in compression for a total of 65 percent movement.
5. Use Related to Exposure: NT (nontraffic).
6. Uses Related to Joint Substrates: M, [**G,**]A, and, as applicable to joint substrates indicated, O.

a. Use O Joint Substrates: [**Galvanized steel**] [**brick**] [**granite**] [**marble**] [**ceramic tile**] [**wood**] [**and**] <**Insert other Use O substrates**>.

T. Multicomponent Nonsag Urethane Sealant [**ES-**<**#**>]:

1. [**Available**]Products:

a. Pacific Polymers, Inc.; Elasto-Thane 227 High Shore Type II (Gun Grade).
b. Pacific Polymers, Inc.; Elasto-Thane 227 Type II (Gun Grade).
c. Pecora Corporation; Dynatred.
d. Polymeric Systems Inc.; PSI-270.
e. <**Insert manufacturer's name; product.**>

2. Type and Grade: M (multicomponent) and NS (nonsag).
3. Class: 25.
4. Use Related to Exposure: T (traffic).
5. Uses Related to Joint Substrates: M, [**G,**]A, and, as applicable to joint substrates indicated, O.

a. Use O Joint Substrates: [**Galvanized steel**] [**brick**] [**granite**] [**marble**] [**ceramic tile**] [**and**] <**Insert other Use O substrates**>.

U. Multicomponent Nonsag Immersible Urethane Sealant [**ES-**<**#**>]:

1. [**Available**]Products:

a. Pacific Polymers, Inc.; Elasto-Thane 227 R Type II (Gun Grade).
b. Pecora Corporation; Dynatred.
c. Tremco; Vulkem 227.
d. Tremco; Vulkem 322 DS.
e. <**Insert manufacturer's name; product.**>

2. Type and Grade: M (multicomponent) and NS (nonsag).
3. Class: 25.
4. Use[**s**] Related to Exposure: [**T (traffic)**] [**NT (nontraffic)**] and I (immersible), Class [**1**] [**2**].

5. Uses Related to Joint Substrates: M, [**G,**]A, and, as applicable to joint substrates indicated, O.

    a. Use O Joint Substrates: [**Color anodic aluminum**] [**aluminum coated with a high-performance coating**] [**galvanized steel**] [**brick**] [**granite**] [**marble**] [**ceramic tile**] [**wood**] [**and**] <**Insert other Use O substrates**>.

V. Multicomponent Pourable Urethane Sealant [**ES-**<#>]:

1. [**Available**]Products:

    a. Bostik Findley; Chem-Calk 550.
    b. Meadows, W. R., Inc.; POURTHANE.
    c. Pacific Polymers, Inc.; Elasto-Thane 227 High Shore Type I (Self Leveling).
    d. Pacific Polymers, Inc.; Elasto-Thane 227 Type I (Self Leveling).
    e. Pecora Corporation; Urexpan NR-200.
    f. Polymeric Systems Inc.; PSI-270SL.
    g. Schnee-Morehead, Inc.; Permathane SM 7201.
    h. Tremco; THC-901.
    i. Tremco; THC-900.
    j. Tremco; Vulkem 245.
    k. Pecora Corporation; Urexpan NR 300, Type H.
    l. Pecora Corporation; Urexpan NR 300, Type M.
    m. <**Insert manufacturer's name; product.**>

2. Type and Grade: M (multicomponent) and P (pourable).
3. Class: [**25**] [**12-1/2**].
4. Use Related to Exposure: T (traffic).
5. Uses Related to Joint Substrates: M, A, and, as applicable to joint substrates indicated, O.

    a. Use O Joint Substrates: [**Color anodic aluminum**] [**aluminum coated with a high-performance coating**] [**galvanized steel**] [**brick**] [**granite**] [**marble**] [**ceramic tile**] [**wood**] [**and**] <**Insert other Use O substrates**>.

W. Multicomponent Pourable Urethane Sealant [**ES-**<#>]:

1. [**Available**]Products:

    a. Pecora Corporation; Dynatrol II-SG.
    b. Sika Corporation, Inc.; Sikaflex - 2c SL.
    c. Sonneborn, Division of ChemRex Inc.; SL 2.
    d. <**Insert manufacturer's name; product.**>

2. Type and Grade: M (multicomponent) and P (pourable).
3. Class: [**25**] [**50**].
4. Uses Related to Exposure: T (traffic) and NT (nontraffic).
5. Uses Related to Joint Substrates: M, G, A, and, as applicable to joint substrates indicated, O.

a. Use O Joint Substrates: [**Color anodic aluminum**] [**aluminum coated with a high-performance coating**] [**galvanized steel**] [**brick**] [**granite**] [**marble**] [**ceramic tile**] [**wood**] [**and**] <**Insert other Use O substrates**>.

X. Multicomponent Pourable Immersible Urethane Sealant [**ES-**<**#**>]:

1. [**Available**]Products:

a. Pacific Polymers, Inc.; Elasto-Thane 227 R Type II (Self Leveling).
b. Tremco; Vulkem 245.
c. <**Insert manufacturer's name; product.**>

2. Type and Grade: M (multicomponent) and P (pourable).
3. Class: 25.
4. Uses Related to Exposure: [**T (traffic)**] [**NT (nontraffic)**] and I (immersible), Class [**1**] [**2**].
5. Uses Related to Joint Substrates: M, [**G,**]A, and, as applicable to joint substrates indicated, O.

a. Use O Joint Substrates: [**Brick**] [**wood**] [**and**] <**Insert other Use O substrates**>.

Y. Single-Component Nonsag Urethane Sealant [**ES-**<**#**>]:

1. [**Available**]Products:

a. Sika Corporation, Inc.; Sikaflex - 1a.
b. Sonneborn, Division of ChemRex Inc.; Ultra.
c. Sonneborn, Division of ChemRex Inc.; NP 1.
d. Tremco; Vulkem 116.
e. <**Insert manufacturer's name; product.**>

2. Type and Grade: S (single component) and NS (nonsag).
3. Class: 25.
4. Uses Related to Exposure: T (traffic) and NT (nontraffic).
5. Uses Related to Joint Substrates: M, [**G,**]A, and, as applicable to joint substrates indicated, O.

a. Use O Joint Substrates: [**Color anodic aluminum**] [**aluminum coated with a high-performance coating**] [**galvanized steel**] [**brick**] [**granite**] [**marble**] [**ceramic tile**] [**wood**] [**and**] <**Insert other Use O substrates**>.

Z. Single-Component Nonsag Urethane Sealant [**ES-**<**#**>]:

1. [**Available**]Products:

a. Bostik Findley; Chem-Calk 900.
b. Bostik Findley; Chem-Calk 915.
c. Bostik Findley; Chem-Calk 916 Textured.
d. Bostik Findley; Chem-Calk 2639.
e. Pecora Corporation; Dynatrol I-XL.
f. Polymeric Systems Inc.; Flexiprene 1000.

g. Polymeric Systems Inc.; PSI-901.
h. Schnee-Morehead, Inc.; Permathane SM7100.
i. Schnee-Morehead, Inc.; Permathane SM7108.
j. Schnee-Morehead, Inc.; Permathane SM7110.
k. Sika Corporation, Inc.; Sikaflex - 15LM.
l. Tremco; DyMonic.
m. Tremco; Vulkem 921.
n. Tremco; Vulkem 931.
o. <**Insert manufacturer's name; product.**>

2. Type and Grade: S (single component) and NS (nonsag).
3. Class: [**25**] [**50**] [**100/50**].
4. Use Related to Exposure: NT (nontraffic).
5. Uses Related to Joint Substrates: M, [**G,**]A, and, as applicable to joint substrates indicated, O.

a. Use O Joint Substrates: [**Color anodic aluminum**] [**aluminum coated with a high-performance coating**] [**galvanized steel**] [**brick**] [**granite**] [**marble**] [**ceramic tile**] [**wood**] [**and**] <**Insert other Use O substrates**>.

AA. Multicomponent Nonsag Immersible Urethane Sealant [**ES-**<**#**>]:

1. [**Available**]Products:

a. Tremco; Vulkem 116.
b. Tremco; Vulkem 921.
c. <**Insert manufacturer's name; product.**>

2. Type and Grade: M (multicomponent) and P (pourable).
3. Class: [**25**] [**50**].
4. Uses Related to Exposure: [**T (traffic) and NT (nontraffic)**] [**NT (nontraffic)**] and I (immersible), Class [**1**] [**2**].
5. Uses Related to Joint Substrates: M, A, and, as applicable to joint substrates indicated, O.

a. Use O Joint Substrates: [**Color anodic aluminum**] [**aluminum coated with a high-performance coating**] [**galvanized steel**] [**brick**] [**granite**] [**marble**] [**ceramic tile**] [**wood**] [**and**] <**Insert other Use O substrates**>.

BB. Single-Component Pourable Urethane Sealant [**ES-**<**#**>]:

1. [**Available**]Products:

a. Sika Corporation, Inc.; Sikaflex - 1CSL.
b. Sonneborn, Division of ChemRex Inc.; SL 1.
c. Tremco; Vulkem Nova 300 SSL.
d. <**Insert manufacturer's name; product.**>

2. Type and Grade: S (single component) and P (pourable).
3. Class: [**25**] [**50**].
4. Uses Related to Exposure: T (traffic) and NT (nontraffic).

5. Uses Related to Joint Substrates: M, [**G,**]A, and, as applicable to joint substrates indicated, O.

    a. Use O Joint Substrates: [**Galvanized steel**] [**brick**] [**granite**] [**marble**] [**ceramic tile**] [**wood**] [**and**] <**Insert other Use O substrates**>.

CC. Single-Component Pourable Urethane Sealant [**ES-**<**#**>]:

1. [**Available**]Products:

    a. Bostik Findley; Chem-Calk 950.
    b. Pecora Corporation; Urexpan NR-201.
    c. Polymeric Systems Inc.; Flexiprene 952.
    d. Schnee-Morehead, Inc.; Permathane SM7101.
    e. Tremco; Tremflex S/L.
    f. Tremco; Vulkem 45.
    g. <**Insert manufacturer's name; product.**>

2. Type and Grade: S (single component) and P (pourable).
3. Class: 25.
4. Use Related to Exposure: T (traffic).
5. Uses Related to Joint Substrates: M, [**G,**]A, and, as applicable to joint substrates indicated, O.

    a. Use O Joint Substrates: [**Color anodic aluminum**] [**aluminum coated with a high-performance coating**] [**galvanized steel**] [**brick**] [**granite**] [**marble**] [**ceramic tile**] [**wood**] [**and**] <**Insert other Use O substrates**>.

2.4 SOLVENT-RELEASE JOINT SEALANTS

A. Acrylic-Based Solvent-Release Joint Sealant [**SRS-**<**#**>]: Comply with ASTM C 1311 or FS TT-S-00230.

1. [**Available**]Products:

    a. Schnee-Moorehead, Inc.; Acryl-R Acrylic Sealant.
    b. Tremco; Mono 555.
    c. <**Insert manufacturer's name; product.**>

B. Butyl-Rubber-Based Solvent-Release Joint Sealant [**SRS-**<**#**>]: Comply with ASTM C 1085.

1. [**Available**]Products:

    a. Bostik Findley; Bostik 300.
    b. Fuller, H. B. Company; SC-0296.
    c. Fuller, H. B. Company; SC-0288.
    d. Pecora Corporation; BC-158.
    e. Polymeric Systems Inc.; PSI-301
    f. Sonneborn, Division of ChemRex Inc.; Sonneborn Multi-Purpose Sealant.
    g. Tremco; Tremco Butyl Sealant.

h. <**Insert manufacturer's name; product.**>

C. Pigmented Narrow-Joint Sealant [**SRS-**<#>]: Manufacturer's standard, solvent-release-curing, pigmented, synthetic-rubber sealant complying with AAMA 803.3 and formulated for sealing joints 3/16 inch (5 mm) or smaller in width.

1. [**Available**]Products:

a. Fuller, H. B. Company; SC-0289.
b. Schnee-Morehead, Inc.; SM 5504 Acryl-R Narrow Joint Sealant.
c. <**Insert manufacturer's name; product.**>

2.5 LATEX JOINT SEALANTS

A. Latex Sealant [**LS-**<#>]: Comply with ASTM C 834, Type P, Grade NF.

B. [**Available**]Products:

1. Bostik Findley; Chem-Calk 600.
2. Pecora Corporation; AC-20+.
3. Schnee-Morehead, Inc.; SM 8200.
4. Sonneborn, Division of ChemRex Inc.; Sonolac.
5. Tremco; Tremflex 834.
6. <**Insert manufacturer's name; product.**>

2.6 ACOUSTICAL JOINT SEALANTS

A. Acoustical Sealant for Exposed and Concealed Joints [**AS-**<#>]: Manufacturer's standard nonsag, paintable, nonstaining latex sealant complying with ASTM C 834 and the following:

1. Product effectively reduces airborne sound transmission through perimeter joints and openings in building construction as demonstrated by testing representative assemblies according to ASTM E 90.
2. [**Available**]Products:

a. Pecora Corporation; AC-20 FTR Acoustical and Insulation Sealant.
b. United States Gypsum Co.; SHEETROCK Acoustical Sealant.
c. <**Insert manufacturer's name; product.**>

B. Acoustical Sealant for Concealed Joints [**AS-**<#>]: Manufacturer's standard, nondrying, nonhardening, nonskinning, nonstaining, gunnable, synthetic-rubber sealant recommended for sealing interior concealed joints to reduce airborne sound transmission.

1. [**Available**]Products:

a. Pecora Corporation; BA-98.
b. Tremco; Tremco Acoustical Sealant.
c. <**Insert manufacturer's name; product.**>

2.7 PREFORMED JOINT SEALANTS

A. Preformed Silicone-Sealant System [**PS-**<#>]: Manufacturer's standard system consisting of precured low-modulus silicone extrusion, in sizes to fit joint widths indicated, combined with a neutral-curing silicone sealant for bonding extrusions to substrates.

1. [**Available**]Products:

    a. Dow Corning Corporation; 123 Silicone Seal.
    b. GE Silicones; UltraSpan US1100.
    c. Pecora Corporation; Sil-Span.
    d. Tremco; Spectrem Ez Seal.
    e. <**Insert manufacturer's name; product.**>

B. Preformed Foam Sealant [**PS-**<#>]: Manufacturer's standard preformed, precompressed, open-cell foam sealant that is manufactured from high-density urethane foam impregnated with a nondrying, water-repellent agent; is factory produced in precompressed sizes in roll or stick form to fit joint widths indicated; is coated on one side with a pressure-sensitive adhesive and covered with protective wrapping; develops a watertight and airtight seal when compressed to the degree specified by manufacturer; and complies with the following:

1. [**Available**]Products:

    a. EMSEAL Joint Systems, Ltd.; Emseal 25V.
    b. illbruck Sealant Systems, Inc.; Wilseal 600.
    c. Polytite Manufacturing Corporation; Polytite B.
    d. Polytite Manufacturing Corporation; Polytite Standard.
    e. Sandell Manufacturing Co., Inc.; Polyseal.
    f. <**Insert manufacturer's name; product.**>

2. Properties: Permanently elastic, mildew resistant, nonmigratory, nonstaining, and compatible with joint substrates and other joint sealants.

    a. Density: [**Manufacturer's standard**] [**5.5 to 6.5 lb/cu. ft. (90 to 110 kg/cu. m)**] [**10 lb/cu. ft. (160 kg/cu. m)**].

2.8 PREFORMED TAPE SEALANTS

A. Back-Bedding Mastic Tape Sealant: Preformed, butyl-based elastomeric tape sealant with a solids content of 100 percent; nonstaining and nonmigrating in contact with nonporous surfaces; with or without spacer rod as recommended in writing by tape manufacturers for application indicated; packaged on rolls with a release paper backing; and complying with ASTM C 1281 and AAMA 800 for products indicated below:

1. AAMA 804.3 tape, where indicated.
2. AAMA 806.3 tape, for applications in which tape is subject to continuous pressure.
3. AAMA 807.3 tape, for applications in which tape is not subject to continuous pressure.

B. Expanded Cellular Tape Sealant: Closed-cell, PVC foam tape sealant; factory coated with adhesive on both surfaces; packaged on rolls with release liner protecting adhesive; and complying with AAMA 800 for the following types:

1. Type 1, for applications in which tape acts as the primary sealant.
2. Type 2, for applications in which tape is used in combination with a full bead of liquid sealant.

2.9 JOINT-SEALANT BACKING

A. General: Provide sealant backings of material and type that are nonstaining; are compatible with joint substrates, sealants, primers, and other joint fillers; and are approved for applications indicated by sealant manufacturer based on field experience and laboratory testing.

B. Cylindrical Sealant Backings: ASTM C 1330, Type [**C (closed-cell material with a surface skin)**] [**O (open-cell material)**] [**B (bicellular material with a surface skin)**][**or any of the preceding types, as approved in writing by joint-sealant manufacturer for joint application indicated**], and of size and density to control sealant depth and otherwise contribute to producing optimum sealant performance:

C. Elastomeric Tubing Sealant Backings: Neoprene, butyl, EPDM, or silicone tubing complying with ASTM D 1056, nonabsorbent to water and gas, and capable of remaining resilient at temperatures down to minus 26 deg F (minus 32 deg C). Provide products with low compression set and of size and shape to provide a secondary seal, to control sealant depth, and to otherwise contribute to optimum sealant performance.

D. Bond-Breaker Tape: Polyethylene tape or other plastic tape recommended by sealant manufacturer for preventing sealant from adhering to rigid, inflexible joint-filler materials or joint surfaces at back of joint where such adhesion would result in sealant failure. Provide self-adhesive tape where applicable.

2.10 MISCELLANEOUS MATERIALS

A. Primer: Material recommended by joint-sealant manufacturer where required for adhesion of sealant to joint substrates indicated, as determined from preconstruction joint-sealant-substrate tests and field tests.

B. Cleaners for Nonporous Surfaces: Chemical cleaners acceptable to manufacturers of sealants and sealant backing materials, free of oily residues or other substances capable of staining or harming joint substrates and adjacent nonporous surfaces in any way, and formulated to promote optimum adhesion of sealants to joint substrates.

C. Masking Tape: Nonstaining, nonabsorbent material compatible with joint sealants and surfaces adjacent to joints.

PART 3 - EXECUTION

3.1 EXAMINATION

A. Examine joints indicated to receive joint sealants, with Installer present, for compliance with requirements for joint configuration, installation tolerances, and other conditions affecting joint-sealant performance.

B. Proceed with installation only after unsatisfactory conditions have been corrected.

3.2 PREPARATION

A. Surface Cleaning of Joints: Clean out joints immediately before installing joint sealants to comply with joint-sealant manufacturer's written instructions and the following requirements:

1. Remove all foreign material from joint substrates that could interfere with adhesion of joint sealant, including dust, paints (except for permanent, protective coatings tested and approved for sealant adhesion and compatibility by sealant manufacturer), old joint sealants, oil, grease, waterproofing, water repellents, water, surface dirt, and frost.
2. Clean porous joint substrate surfaces by brushing, grinding, blast cleaning, mechanical abrading, or a combination of these methods to produce a clean, sound substrate capable of developing optimum bond with joint sealants. Remove loose particles remaining after cleaning operations above by vacuuming or blowing out joints with oil-free compressed air. Porous joint substrates include the following:

    a. Concrete.
    b. Masonry.
    c. Unglazed surfaces of ceramic tile.
    d. <**Insert other porous joint substrate.**>

3. Remove laitance and form-release agents from concrete.
4. Clean nonporous surfaces with chemical cleaners or other means that do not stain, harm substrates, or leave residues capable of interfering with adhesion of joint sealants. Nonporous joint substrates include the following:

    a. Metal.
    b. Glass.
    c. Porcelain enamel.
    d. Glazed surfaces of ceramic tile.
    e. <**Insert other nonporous joint substrate.**>

B. Joint Priming: Prime joint substrates[**, where recommended in writing by joint-sealant manufacturer,**] based on preconstruction joint-sealant-substrate tests or prior experience. Apply primer to comply with joint-sealant manufacturer's written instructions. Confine primers to areas of joint-sealant bond; do not allow spillage or migration onto adjoining surfaces.

C. Masking Tape: Use masking tape where required to prevent contact of sealant with adjoining surfaces that otherwise would be permanently stained or damaged by such contact or by

cleaning methods required to remove sealant smears. Remove tape immediately after tooling without disturbing joint seal.

3.3 INSTALLATION OF JOINT SEALANTS

A. General: Comply with joint-sealant manufacturer's written installation instructions for products and applications indicated, unless more stringent requirements apply.

B. Sealant Installation Standard: Comply with recommendations in ASTM C 1193 for use of joint sealants as applicable to materials, applications, and conditions indicated.

C. Acoustical Sealant Application Standard: Comply with recommendations in ASTM C 919 for use of joint sealants in acoustical applications as applicable to materials, applications, and conditions indicated.

D. Install sealant backings of type indicated to support sealants during application and at position required to produce cross-sectional shapes and depths of installed sealants relative to joint widths that allow optimum sealant movement capability.

1. Do not leave gaps between ends of sealant backings.
2. Do not stretch, twist, puncture, or tear sealant backings.
3. Remove absorbent sealant backings that have become wet before sealant application and replace them with dry materials.

E. Install bond-breaker tape behind sealants where sealant backings are not used between sealants and backs of joints.

F. Install sealants using proven techniques that comply with the following and at the same time backings are installed:

1. Place sealants so they directly contact and fully wet joint substrates.
2. Completely fill recesses in each joint configuration.
3. Produce uniform, cross-sectional shapes and depths relative to joint widths that allow optimum sealant movement capability.

G. Tooling of Nonsag Sealants: Immediately after sealant application and before skinning or curing begins, tool sealants according to requirements specified below to form smooth, uniform beads of configuration indicated; to eliminate air pockets; and to ensure contact and adhesion of sealant with sides of joint.

1. Remove excess sealant from surfaces adjacent to joints.
2. Use tooling agents that are approved in writing by sealant manufacturer and that do not discolor sealants or adjacent surfaces.
3. Provide concave joint configuration per Figure 5A in ASTM C 1193, unless otherwise indicated.
4. Provide flush joint configuration where indicated per Figure 5B in ASTM C 1193.
5. Provide recessed joint configuration of recess depth and at locations indicated per Figure 5C in ASTM C 1193.

    a. Use masking tape to protect surfaces adjacent to recessed tooled joints.

H. Installation of Preformed Tapes: Install according to manufacturer's written instructions.

I. Installation of Preformed Silicone-Sealant System: Comply with the following requirements:

1. Apply masking tape to each side of joint, outside of area to be covered by sealant system.
2. Apply silicone sealant to each side of joint to produce a bead of size complying with preformed silicone-sealant system manufacturer's written instructions and covering a bonding area of not less than 3/8 inch (10 mm). Hold edge of sealant bead 1/4 inch (6 mm) inside masking tape.
3. Within 10 minutes of sealant application, press silicone extrusion into sealant to wet extrusion and substrate. Use a roller to apply consistent pressure and ensure uniform contact between sealant and both extrusion and substrate.
4. Complete installation of sealant system in horizontal joints before installing in vertical joints. Lap vertical joints over horizontal joints. At ends of joints, cut silicone extrusion with a razor knife.

J. Installation of Preformed Foam Sealants: Install each length of sealant immediately after removing protective wrapping, taking care not to pull or stretch material, producing seal continuity at ends, turns, and intersections of joints. For applications at low ambient temperatures where expansion of sealant requires acceleration to produce seal, apply heat to sealant in compliance with sealant manufacturer's written instructions.

3.4 FIELD QUALITY CONTROL

A. Field-Adhesion Testing: Field test joint-sealant adhesion to joint substrates as follows:

1. Extent of Testing: Test completed elastomeric sealant joints as follows:

a. Perform [**10**] <**Insert number**> tests for the first [**1000 feet (300 m)**] <**Insert dimension**> of joint length for each type of elastomeric sealant and joint substrate.
b. Perform 1 test for each [**1000 feet (300 m)**] <**Insert dimension**> of joint length thereafter or 1 test per each floor per elevation.

2. Test Method: Test joint sealants according to [**Method A, Field-Applied Sealant Joint Hand Pull Tab**] [**Method B, Exposed Surface Finish Hand Pull Tab**] [**Method C, Field-Applied Sealant Joint Hand Pull Flap**] [**or**] [**Method D, Water Immersion**] in Appendix X1 in ASTM C 1193[**, as appropriate for type of joint-sealant application indicated**].

a. For joints with dissimilar substrates, verify adhesion to each substrate separately; do this by extending cut along one side, verifying adhesion to opposite side. Repeat procedure for opposite side.

3. Inspect joints for complete fill, for absence of voids, and for joint configuration complying with specified requirements. Record results in a field-adhesion-test log.
4. Inspect tested joints and report on the following:

a. Whether sealants in joints connected to pulled-out portion failed to adhere to joint substrates or tore cohesively. Include data on pull distance used to test each type

of product and joint substrate. Compare these results to determine if adhesion passes sealant manufacturer's field-adhesion hand-pull test criteria.

b. Whether sealants filled joint cavities and are free of voids.

c. Whether sealant dimensions and configurations comply with specified requirements.

5. Record test results in a field-adhesion-test log. Include dates when sealants were installed, names of persons who installed sealants, test dates, test locations, whether joints were primed, adhesion results and percent elongations, sealant fill, sealant configuration, and sealant dimensions.

6. Repair sealants pulled from test area by applying new sealants following same procedures used originally to seal joints. Ensure that original sealant surfaces are clean and that new sealant contacts original sealant.

B. Evaluation of Field Test Results: Sealants not evidencing adhesive failure from testing or noncompliance with other indicated requirements will be considered satisfactory. Remove sealants that fail to adhere to joint substrates during testing or to comply with other requirements. Retest failed applications until test results prove sealants comply with indicated requirements.

3.5 CLEANING

A. Clean off excess sealant or sealant smears adjacent to joints as the Work progresses by methods and with cleaning materials approved in writing by manufacturers of joint sealants and of products in which joints occur.

3.6 PROTECTION

A. Protect joint sealants during and after curing period from contact with contaminating substances and from damage resulting from construction operations or other causes so sealants are without deterioration or damage at time of Substantial Completion. If, despite such protection, damage or deterioration occurs, cut out and remove damaged or deteriorated joint sealants immediately so installations with repaired areas are indistinguishable from original work.

3.7 JOINT-SEALANT SCHEDULE

A. Joint-Sealant Application JS-[#]: Exterior vertical[**and horizontal nontraffic**] construction joints in cast-in-place concrete.

1. Joint Sealant: [**Multicomponent nonsag polysulfide sealant**] [**Single-component nonsag polysulfide sealant**] [**Multicomponent nonsag neutral-curing silicone sealant**] [**Single-component neutral- and basic-curing silicone sealant**] [**Single-component neutral-curing silicone sealant**] [**Multicomponent nonsag urethane sealant**] [**Multicomponent nonsag immersible urethane sealant**] [**Single-component nonsag urethane sealant**] <**Insert joint sealant**> [**ES-**<**#**>].

2. Joint-Sealant Color: [**As selected by Architect from manufacturer's full range**] <**Insert color**> <**Insert color designation of one of the joint-sealant products named in Part 2**>.

B. Joint-Sealant Application JS-[#]: Exterior horizontal [**nontraffic**] [**and**] [**traffic**] [**isolation**] [**and**] [**contraction**] joints in cast-in-place concrete slabs.

1. Joint Sealant: [**Multicomponent pourable polysulfide sealant**] [**Single-component pourable neutral-curing silicone sealant**] [**Multicomponent nonsag urethane sealant**] [**Multicomponent pourable urethane sealant**] [**Multicomponent pourable immersible urethane sealant**] [**Single-component pourable urethane sealant**] <**Insert joint sealant**> [**ES-**<#>].
2. Joint-Sealant Color: [**As selected by Architect from manufacturer's full range**] <**Insert color**> <**Insert color designation of one of the joint-sealant products named in Part 2**>.

C. Joint-Sealant Application JS-[#]: Exterior vertical[**and horizontal nontraffic**] joints between plant-precast architectural concrete units.

1. Joint Sealant: [**Multicomponent nonsag polysulfide sealant**] [**Single-component nonsag polysulfide sealant**] [**Single-component neutral- and basic-curing silicone sealant**] [**Multicomponent nonsag neutral-curing silicone sealant**] [**Single-component neutral-curing silicone sealant**] [**Multicomponent nonsag urethane sealant**] [**Single-component nonsag urethane sealant**] <**Insert joint sealant**> [**ES-**<#>].
2. Joint-Sealant Color: [**As selected by Architect from manufacturer's full range**] <**Insert color**> <**Insert color designation of one of the joint-sealant products named in Part 2**>.

D. Joint-Sealant Application JS-[#]: Exterior vertical control and expansion joints in unit masonry.

1. Joint Sealant: [**Multicomponent nonsag polysulfide sealant**] [**Single-component nonsag polysulfide sealant**] [**Single-component neutral- and basic-curing silicone sealant**] [**Single-component neutral-curing silicone sealant**] [**Multicomponent nonsag urethane sealant**] [**Single-component nonsag urethane sealant**] <**Insert joint sealant**> [**ES-**<#>].
2. Joint-Sealant Color: [**As selected by Architect from manufacturer's full range**] <**Insert color**> <**Insert color designation of one of the joint-sealant products named in Part 2**>.

E. Joint-Sealant Application JS-[#]: Exterior joints in dimension stone cladding.

1. Joint Sealant: [**Multicomponent nonsag polysulfide sealant**] [**Single-component nonsag polysulfide sealant**] [**Multicomponent nonsag neutral-curing silicone sealant**] [**Single-component neutral- and basic-curing silicone sealant**] [**Single-component neutral-curing silicone sealant**] [**Multicomponent nonsag urethane sealant**] <**Insert joint sealant**> [**ES-**<#>].
2. Joint-Sealant Color: [**As selected by Architect from manufacturer's full range**] <**Insert color**> <**Insert color designation of one of the joint-sealant products named in Part 2**>.

F. Joint-Sealant Application JS-[#]: Interior and exterior sealant-pointed mortar joints in glass unit masonry assemblies.

1. Joint Sealant: [**Single-component neutral-curing silicone sealant**] [**Single-component acid-curing silicone sealant**] <**Insert joint sealant**> [**ES-**<#>].

2. Joint-Sealant Color: [**As selected by Architect from manufacturer's full range**] <**Insert color**> <**Insert color designation of one of the joint-sealant products named in Part 2**>.

G. Joint-Sealant Application JS-[#]: Exterior joints in exterior insulation and finish systems.

1. Joint Sealant: [**Single-component neutral- and basic-curing silicone sealant**] [**Single-component neutral-curing silicone sealant**] [**Multicomponent nonsag urethane sealant**] <**Insert joint sealant**> [**ES-**<#>] [**Preformed silicone-sealant system**].
2. Joint-Sealant Color: [**As selected by Architect from manufacturer's full range**] <**Insert color**> <**Insert color designation of one of the joint-sealant products named in Part 2**>.

H. Joint-Sealant Application JS-[#]: Exterior butt joints between metal panels.

1. Joint Sealant: [**Single-component neutral- and basic-curing silicone sealant**] [**Single-component neutral-curing silicone sealant**] [**Multicomponent nonsag urethane sealant**] [**Single-component nonsag urethane sealant**] <**Insert joint sealant**> [**ES-**<#>].
2. Joint-Sealant Color: [**As selected by Architect from manufacturer's full range**] <**Insert color**> <**Insert color designation of one of the joint-sealant products named in Part 2**>.

I. Joint-Sealant Application JS-[#]: Exterior vertical joints between[**different materials listed above**] <**Insert materials**>.

1. Joint Sealant: [**Multicomponent nonsag polysulfide sealant**] [**Single-component nonsag polysulfide sealant**] [**Single-component neutral- and basic-curing silicone sealant**] [**Single-component neutral-curing silicone sealant**] [**Multicomponent nonsag urethane sealant**] [**Single-component nonsag urethane sealant**] <**Insert joint sealant**> [**ES-**<#>].
2. Joint-Sealant Color: [**As selected by Architect from manufacturer's full range**] <**Insert color**> <**Insert color designation of one of the joint-sealant products named in Part 2**>.

J. Joint-Sealant Application JS-[#]: Exterior perimeter joints between <**Insert material**> and frames of [**doors**] [**windows**] [**and**] [**louvers**].

1. Joint Sealant: [**Multicomponent nonsag polysulfide sealant**] [**Single-component nonsag polysulfide sealant**] [**Single-component neutral- and basic-curing silicone sealant**] [**Single-component neutral-curing silicone sealant**] [**Multicomponent nonsag urethane sealant**] [**Single-component nonsag urethane sealant**] <**Insert joint sealant**> [**ES-**<#>].
2. Joint-Sealant Color: [**As selected by Architect from manufacturer's full range**] <**Insert color**> <**Insert color designation of one of the joint-sealant products named in Part 2**>.

K. Joint-Sealant Application JS-[#]: Exterior control and expansion joints in [**ceilings**] [**and other**] [**overhead surfaces**].

1. Joint Sealant: [**Multicomponent nonsag polysulfide sealant**] [**Single-component nonsag polysulfide sealant**] [**Single-component neutral- and basic-curing silicone sealant**] [**Single-component neutral-curing silicone sealant**] [**Multicomponent nonsag urethane sealant**] [**Single-component nonsag urethane sealant**] <**Insert joint sealant**> [**ES-**<#>].
2. Joint-Sealant Color: [**As selected by Architect from manufacturer's full range**] <**Insert color**> <**Insert color designation of one of the joint-sealant products named in Part 2**>.

L. Joint-Sealant Application JS-[#]: <**Insert other exterior joints in vertical and horizontal nontraffic surfaces.**>

1. Joint Sealant: [**Multicomponent nonsag polysulfide sealant**] [**Single-component nonsag polysulfide sealant**] [**Single-component neutral- and basic-curing silicone sealant**] [**Single-component neutral-curing silicone sealant**] [**Multicomponent nonsag urethane sealant**] [**Single-component nonsag urethane sealant**] <**Insert joint sealant**> [**ES-**<#>].
2. Joint-Sealant Color: [**As selected by Architect from manufacturer's full range**] <**Insert color**> <**Insert color designation of one of the joint-sealant products named in Part 2**>.

M. Joint-Sealant Application JS-[#]: Exterior control and expansion joints in horizontal traffic surfaces of [**brick pavers**] [**ceramic tile**] [**stone paving units**] <**Insert material**>.

1. Joint Sealant: [**Multicomponent pourable polysulfide sealant**] [**Multicomponent nonsag urethane sealant**] [**Multicomponent pourable urethane sealant**] [**Single-component pourable urethane sealant**] <**Insert joint sealant**> [**ES-**<#>].
2. Joint-Sealant Color: [**As selected by Architect from manufacturer's full range**] <**Insert color**> <**Insert color designation of one of the joint-sealant products named in Part 2**>.

N. Joint-Sealant Application JS-[#]: Vertical control and expansion joints on exposed interior surfaces of exterior walls.

1. Joint Sealant: [**Multicomponent nonsag polysulfide sealant**] [**Single-component nonsag polysulfide sealant**] [**Single-component neutral- and basic-curing silicone sealant**] [**Single-component neutral-curing silicone sealant**] [**Multicomponent nonsag urethane sealant**] [**Single-component nonsag urethane sealant**] <**Insert joint sealant**> [**ES-**<#>] [**Latex sealant**].
2. Joint-Sealant Color: [**As selected by Architect from manufacturer's full range**] <**Insert color**> <**Insert color designation of one of the joint-sealant products named in Part 2**>.

O. Joint-Sealant Application JS-[#]: Interior perimeter joints of exterior openings.

1. Joint Sealant: [**Multicomponent nonsag polysulfide sealant**] [**Single-component nonsag polysulfide sealant**] [**Single-component neutral- and basic-curing silicone sealant**] [**Single-component neutral-curing silicone sealant**] [**Multicomponent nonsag urethane sealant**] [**Single-component nonsag urethane sealant**] <**Insert joint sealant**> [**ES-**<#>] [**Latex sealant**].

2. Joint-Sealant Color: [**As selected by Architect from manufacturer's full range**] <**Insert color**> <**Insert color designation of one of the joint-sealant products named in Part 2**>.

P. Joint-Sealant Application JS-[#]: Interior [**ceramic**] [**dimension stone**] tile expansion, control, contraction, and isolation joints in horizontal traffic surfaces.

1. Joint Sealant: [**Multicomponent pourable polysulfide sealant**] [**Multicomponent nonsag urethane sealant**] [**Multicomponent pourable urethane sealant**] [**Single-component pourable urethane sealant**] <**Insert joint sealant**> [**ES-**<#>].
2. Joint-Sealant Color: [**As selected by Architect from manufacturer's full range**] <**Insert color**> <**Insert color designation of one of the joint-sealant products named in Part 2**>.

Q. Joint-Sealant Application JS-[#]: Interior joints between plumbing fixtures and adjoining walls, floors, and counters.

1. Joint Sealant: Single-component mildew-resistant [**neutral**] [**acid**]-curing silicone sealant[**ES-**<#>].
2. Joint-Sealant Color: [**White**] [**As selected by Architect from manufacturer's full range**] <**Insert color**> <**Insert color designation of one of the joint-sealant products named in Part 2**>.

R. Joint-Sealant Application JS-[#]: Vertical joints on exposed surfaces of interior [**unit masonry**] [**and**] [**concrete**] [**walls**] [**and**] [**partitions**].

1. Joint Sealant: [**Multicomponent nonsag polysulfide sealant**] [**Single-component nonsag polysulfide sealant**] [**Single-component neutral- and basic-curing silicone sealant**] [**Single-component neutral-curing silicone sealant**] [**Multicomponent nonsag urethane sealant**] [**Single-component nonsag urethane sealant**] <**Insert joint sealant**> [**ES-**<#>] [**Latex sealant**].
2. Joint-Sealant Color: [**White**] [**As selected by Architect from manufacturer's full range**] <**Insert color**> <**Insert color designation of one of the joint-sealant products named in Part 2**>.

S. Joint-Sealant Application JS-[#]: Perimeter joints between interior wall surfaces and frames of [**interior doors**] [**windows**] [**and**] [**elevator entrances**].

1. Joint Sealant: [**Latex sealant**] <**Insert joint sealant**>.
2. Joint-Sealant Color: [**As selected by Architect from manufacturer's full range**] <**Insert color**> <**Insert color designation of one of the joint-sealant products named in Part 2**>.

T. Joint-Sealant Application JS-[#]: Interior control, expansion, and isolation joints in horizontal traffic surfaces of [**dimension stone**] [**brick**] flooring [**and**] <**Insert other interior joints in horizontal traffic surfaces**>.

1. Joint Sealant: [**Multicomponent pourable polysulfide sealant**] [**Multicomponent nonsag urethane sealant**] [**Multicomponent pourable urethane sealant**] [**Single-component pourable urethane sealant**] <**Insert joint sealant**> [**ES-**<#>].

2. Joint-Sealant Color: [**As selected by Architect from manufacturer's full range**] <**Insert color**> <**Insert color designation of one of the joint-sealant products named in Part 2**>.

U. Joint-Sealant Application JS-[#]: <**Insert other interior joints in horizontal traffic surfaces**>.

1. Joint Sealant: <**Insert joint sealant**> [**ES-**<#>].
2. Joint-Sealant Color: [**As selected by Architect from manufacturer's full range**] <**Insert color**> <**Insert color designation of one of the joint-sealant products named in Part 2**>.

END OF SECTION 07920

Division 8 - Doors and Windows

SECTION 08111 - STANDARD STEEL DOORS AND FRAMES

PART 1 - GENERAL

1.1 RELATED DOCUMENTS

A. Drawings and general provisions of the Contract, including General and Supplementary Conditions and Division 1 Specification Sections, apply to this Section.

1.2 SUMMARY

A. This Section includes the following:

1. Standard hollow-metal steel doors.
2. Standard hollow-metal steel frames.

B. Related Sections include the following:

1. Division 4 Section "Unit Masonry Assemblies" for building anchors into and grouting standard steel frames in masonry construction.
2. Division 8 Section "Stainless-Steel Doors and Frames" for custom hollow-metal doors and frames manufactured from stainless steel.
3. Division 8 Section "Sound-Control Door Assemblies" for packaged, acoustical hollow-metal door and frame assemblies with STC ratings of 35 or more.
4. Division 8 Section "Glazing" for glazed lites in standard steel [**doors**] [**frames**] [**doors and frames**].
5. Division 8 Sections for door hardware for standard steel doors.
6. Division 9 painting Sections for field painting standard steel doors and frames.
7. Division 13 Section "Radiation Protection" for lead-lined, hollow-metal doors and frames.

1.3 DEFINITIONS

A. Minimum Thickness: Minimum thickness of base metal without coatings.

1.4 SUBMITTALS

A. Product Data: Include construction details, material descriptions, core descriptions, label compliance, [**fire-resistance rating,**] [**fire-resistance and temperature-rise ratings,**]and finishes for each type of steel door and frame specified.

B. Shop Drawings: In addition to requirements below, provide a schedule of standard steel doors and frames using same reference numbers for details and openings as those on Drawings:

1. Elevations of each door design.
2. Details of doors, including vertical and horizontal edge details.

3. Frame details for each frame type, including dimensioned profiles.
4. Details and locations of reinforcement and preparations for hardware.
5. Details of each different wall opening condition.
6. Details of anchorages, accessories, joints, and connections.
7. Details of glazing frames and stops showing glazing.
8. Details of conduit and preparations for electrified door hardware and controls.

C. Coordination Drawings: Drawings of each opening, including door and frame, drawn to scale and coordinating door hardware. Show elevations of each door design type, showing dimensions, locations of door hardware, and preparations for power, signal, and [**electrified**] [**and**] [**pneumatic**] control systems.

D. Samples for Initial Selection: For units with factory-applied color finishes.

E. Samples for Verification: For each type of exposed finish required, prepared on Samples of not less than 3 by 5 inches (75 by 125 mm).

F. Oversize Construction Certification: For standard steel door assemblies required to be fire rated and exceeding limitations of labeled assemblies; include statement that doors comply with requirements of design, materials, and construction but have not been subjected to fire test.

G. Qualification Data: For [**Installer**] [**testing agency**].

H. Product Test Reports: Based on evaluation of comprehensive fire tests performed by a qualified testing agency, for each type of standard steel door and frame.

1.5 QUALITY ASSURANCE

A. Installer Qualifications: An employer of workers trained and approved by manufacturer.

B. Testing Agency Qualifications: An independent agency qualified according to ASTM E 329 for testing indicated, as documented according to ASTM E 548.

C. Source Limitations: Obtain standard steel doors and frames through one source from a single manufacturer.

D. Fire-Rated Door [**Sidelight**] [**and**] [**Transom**] Frame Assemblies: Assemblies complying with NFPA 80 that are listed and labeled by a testing and inspecting agency acceptable to authorities having jurisdiction, for fire-protection ratings indicated.

1. Test Pressure: Test at atmospheric (neutral) pressure according to NFPA 252 or UL 10B.
2. Test Pressure: Test according to [**NFPA 252 or UL 10C**] [**UBC Standard 7-2**]. After 5 minutes into the test, the neutral pressure level in furnace shall be established at 40 inches (1000 mm) or less above the sill.
3. Oversize Fire-Rated Door Assemblies: For units exceeding sizes of tested assemblies, provide certification by a testing agency acceptable to authorities having jurisdiction that doors comply with standard construction requirements for tested and labeled fire-protection-rated door assemblies except for size.
4. Temperature-Rise Rating: At exit enclosures, provide doors that have a temperature-rise rating of 450 deg F (250 deg C) maximum in 30 minutes of fire exposure.

E. Fire-Rated, Borrowed-Light Frame Assemblies: Assemblies complying with NFPA 80 that are listed and labeled, by a testing and inspecting agency acceptable to authorities having jurisdiction, for fire-protection ratings indicated, based on testing according to [**NFPA 257 or UL 9**] [**UBC Standard 7-4**]. Label each individual glazed lite.

F. Smoke-Control Door Assemblies: Comply with [**NFPA 105 or UL 1784**] [**UBC Standard 7-2**].

G. Preinstallation Conference: Conduct conference at Project site to comply with requirements in Division 1 Section "Project Management and Coordination."

1.6 DELIVERY, STORAGE, AND HANDLING

A. Deliver doors and frames palletized, wrapped, or crated to provide protection during transit and Project-site storage. Do not use nonvented plastic.

1. Provide additional protection to prevent damage to finish of factory-finished doors and frames.

B. Deliver welded frames with two removable spreader bars across bottom of frames, tack welded to jambs and mullions.

C. Store doors and frames under cover at Project site. Place units in a vertical position with heads up, spaced by blocking, on minimum 4-inch- (102-mm-) high wood blocking. Avoid using nonvented plastic or canvas shelters that could create a humidity chamber.

1. If wrappers on doors become wet, remove cartons immediately. Provide minimum 1/4-inch (6-mm) space between each stacked door to permit air circulation.

1.7 PROJECT CONDITIONS

A. Field Measurements: Verify openings by field measurements before fabrication and indicate measurements on Shop Drawings.

1. Established Dimensions: Where field measurements cannot be made without delaying the Work, establish opening dimensions and proceed with fabricating standard steel frames without field measurements. Coordinate wall construction to ensure that actual opening dimensions correspond to established dimensions.

1.8 COORDINATION

A. Coordinate installation of anchorages for standard steel frames. Furnish setting drawings, templates, and directions for installing anchorages, including sleeves, concrete inserts, anchor bolts, and items with integral anchors, that are to be embedded in [**concrete**] [**or**] [**masonry**]. Deliver such items to Project site in time for installation.

PART 2 - PRODUCTS

2.1 MANUFACTURERS

A. Available Manufacturers: Subject to compliance with requirements, manufacturers offering products that may be incorporated into the Work include, but are not limited to, the following:

B. Manufacturers: Subject to compliance with requirements, provide products by one of the following:

1. Amweld Building Products, LLC.
2. Benchmark Doors; a division of General Products Co., Inc.
3. Ceco Door Products; an ASSA ABLOY Group Company.
4. CURRIES Company; an ASSA ABLOY Group Company.
5. Deansteel Manufacturing, Inc.
6. Fleming Door Products Ltd.; an ASSA ABLOY Group Company.
7. Kewanee Corporation (The).
8. Mesker Door Inc.
9. Pioneer Industries, Inc.
10. Republic Builders Products Company.
11. Steelcraft; an Ingersoll-Rand Company.
12. <**Insert manufacturer's name.**>

2.2 MATERIALS

A. Cold-Rolled Steel Sheet: ASTM A 1008/A 1008M, Commercial Steel (CS), Type B; suitable for exposed applications.

B. Hot-Rolled Steel Sheet: ASTM A 1011/A 1011M, Commercial Steel (CS), Type B; free of scale, pitting, or surface defects; pickled and oiled.

C. Metallic-Coated Steel Sheet: ASTM A 653/A 653M, Commercial Steel (CS), Type B; with minimum A40 (ZF120) zinc-iron-alloy (galvannealed) coating designation.

D. Electrolytic Zinc-Coated Steel Sheet: ASTM A 591/A 591M, Commercial Steel (CS), Class B coating; mill phosphatized.

E. Supports and Anchors: After fabricating, galvanize units to be built into exterior walls according to ASTM A 153/A 153M, Class B.

F. Inserts, Bolts, and Fasteners: Provide items to be built into exterior walls, hot-dip galvanized according to ASTM A 153/A 153M.

G. Powder-Actuated Fasteners in Concrete: Fastener system of type suitable for application indicated, fabricated from corrosion-resistant materials, with clips or other accessory devices for attaching standard steel door frames of type indicated.

H. Grout: Comply with Division 4 Section "Unit Masonry Assemblies."

I. Grout: Comply with ASTM C 476, with a slump of 4 inches (102 mm) for standard steel door frames built into concrete or masonry, as measured according to ASTM C 143/C 143M.

J. Mineral-Fiber Insulation: ASTM C 665, Type I (blankets without membrane facing); consisting of fibers manufactured from slag or rock wool with 6- to 12-lb/cu. ft. (96- to 192-kg/cu. m) density; with maximum flame-spread and smoke-developed indexes of 25 and 50 respectively; passing ASTM E 136 for combustion characteristics.

K. Glazing: Comply with requirements in Division 8 Section "Glazing."

L. Bituminous Coating: Cold-applied asphalt mastic, SSPC-Paint 12, compounded for 15-mil (0.4-mm) dry film thickness per coat. Provide inert-type noncorrosive compound free of asbestos fibers, sulfur components, and other deleterious impurities.

2.3 STANDARD STEEL DOORS

A. General: Provide doors of design indicated, not less than thickness indicated; fabricated with smooth surfaces, without visible joints or seams on exposed faces, unless otherwise indicated. Comply with ANSI A250.8.

1. Design: [**Flush panel**] [**Embossed panel**] [**As indicated on Drawings**].
2. Core Construction: Manufacturer's standard kraft-paper honeycomb, polystyrene, polyurethane, mineral-board, or vertical steel-stiffener core that produces doors complying with ANSI A250.8.

    a. Fire Door Core: As required to provide fire-protection[**and temperature-rise**] ratings indicated.
    b. Thermal-Rated (Insulated) Doors: Where indicated, provide doors fabricated with thermal-resistance value (R-value) of not less than [**4.0 deg F x h x sq. ft./Btu (0.704 K x sq. m/W)**] [**6.0 deg F x h x sq. ft./Btu (1.057 K x sq. m/W)**] [**12.3 deg F x h x sq. ft./Btu (2.166 K x sq. m/W)**] <**Insert R-value**> when tested according to ASTM C 1363.

        1) Locations: [**Exterior doors**] [**and**] [**interior doors where indicated**].

3. Vertical Edges for Single-Acting Doors: [**Beveled edge**] [**Square edge**] [**Beveled edge unless square edge is indicated**] [**Square edge unless beveled edge is indicated**].

    a. Beveled Edge: 1/8 inch in 2 inches (3 mm in 50 mm).

4. Vertical Edges for Double-Acting Doors: Round vertical edges with 2-1/8-inch (54-mm) radius.
5. Top and Bottom Edges: Closed with flush or inverted 0.042-inch- (1.0-mm-) thick end closures or channels of same material as face sheets.
6. Tolerances: Comply with SDI 117, "Manufacturing Tolerances for Standard Steel Doors and Frames."

B. Exterior Doors: Face sheets fabricated from metallic-coated steel sheet. Provide doors complying with requirements indicated below by referencing ANSI A250.8 for level and model and ANSI A250.4 for physical-endurance level:

1. Level 1 and Physical Performance Level C, (Standard Duty), Model [**1 (Full Flush)**] [**2 (Seamless)**].
2. Level 2 and Physical Performance Level B (Heavy Duty), Model [**1 (Full Flush)**] [**2 (Seamless)**].
3. Level 3 and Physical Performance Level A (Extra Heavy Duty), Model [**1 (Full Flush)**] [**2 (Seamless)**] [**3 (Stile and Rail)**].
4. Level 4 and Physical Performance Level A (Maximum Duty), Model [**1 (Full Flush)**] [**2 (Seamless)**].

C. Interior Doors: Face sheets fabricated from cold-rolled steel sheet, unless otherwise indicated to comply with exterior door requirements. Provide doors complying with requirements indicated below by referencing ANSI A250.8 for level and model and ANSI A250.4 for physical-endurance level:

1. Level 1 and Physical Performance Level C, (Standard Duty), Model [**1 (Full Flush)**] [**2 (Seamless)**].
2. Level 2 and Physical Performance Level B (Heavy Duty), Model [**1 (Full Flush)**] [**2 (Seamless)**].
3. Level 3 and Physical Performance Level A (Extra Heavy Duty), Model [**1 (Full Flush)**] [**2 (Seamless)**] [**3 (Stile and Rail)**].
4. Level 4 and Physical Performance Level A (Maximum Duty), Model [**1 (Full Flush)**] [**2 (Seamless)**].

D. Hardware Reinforcement: Fabricate reinforcement plates from same material as door face sheets to comply with the following minimum sizes:

1. Hinges: Minimum 0.123 inch (3.0 mm) thick by 1-1/2 inches (38 mm) wide by 6 inches (152 mm) longer than hinge, secured by not less than 6 spot welds.
2. Pivots: Minimum 0.167 inch (4.2 mm) thick by 1-1/2 inches (38 mm) wide by 6 inches (152 mm) longer than hinge, secured by not less than 6 spot welds.
3. Lock Face[**, Flush Bolts,**] Closers, and Concealed Holders: Minimum 0.067 inch (1.7 mm) thick.
4. All Other Surface-Mounted Hardware: Minimum 0.067 inch (1.7 mm) thick.

E. Fabricate concealed stiffeners and hardware reinforcement from either cold- or hot-rolled steel sheet.

2.4 STANDARD STEEL FRAMES

A. General: Comply with ANSI A250.8 and with details indicated for type and profile.

B. Exterior Frames: Fabricated from metallic-coated steel sheet.

1. Fabricate frames with mitered or coped and welded face corners[**and seamless face joints**].
2. Frames for Level 1 Steel Doors: [**0.042-inch- (1.0-mm-)**] [**0.053-inch- (1.3-mm-)**] thick steel sheet[**, unless otherwise indicated**].
3. Frames for Level 2 Steel Doors: 0.053-inch- (1.3-mm-) thick steel sheet[**, unless otherwise indicated**].

4. Frames for Level 3 Steel Doors: [**0.053-inch- (1.3-mm-)**] [**0.067-inch- (1.7-mm-)**] thick steel sheet[**, unless otherwise indicated**].
5. Frames for Level 4 Steel Doors: [**0.067-inch- (1.7-mm-)**] [**0.093-inch- (2.3-mm-)**] thick steel sheet[**, unless otherwise indicated**].

C. Interior Frames: Fabricated from cold-rolled steel sheet, unless otherwise indicated to comply with exterior frame requirements.

1. Fabricate frames with mitered or coped and welded face corners [**and seamless face joints**] [**, unless otherwise indicated**].
2. Fabricate knocked-down frames with mitered or coped corners, for field assembly[**where indicated**].
3. Fabricate knocked-down, drywall slip-on frames for in-place gypsum board partitions.
4. Frames for Level 1 Steel Doors: [**0.042-inch- (1.0-mm-)**] [**0.053-inch- (1.3-mm-)**] thick steel sheet[**, unless otherwise indicated**].
5. Frames for Level 2 Steel Doors: 0.053-inch- (1.3-mm-) thick steel sheet[**, unless otherwise indicated**].
6. Frames for Level 3 Steel Doors: [**0.053-inch- (1.3-mm-)**] [**0.067-inch- (1.7-mm-)**] thick steel sheet[**, unless otherwise indicated**].
7. Frames for Wood Doors: [**0.042-inch- (1.0-mm-)**] [**0.053-inch- (1.3-mm-)**] [**0.067-inch- (1.7-mm-)**] [**0.093-inch- (2.3-mm-)**] thick steel sheet[**, unless otherwise indicated**].
8. Frames for Borrowed Lights: [**0.042-inch- (1.0-mm-)**] [**0.053-inch- (1.3-mm-)**] thick steel sheet[**, unless otherwise indicated**].

D. Hardware Reinforcement: Fabricate reinforcement plates from same material as frames to comply with the following minimum sizes:

1. Hinges: Minimum 0.123 inch (3.0 mm) thick by 1-1/2 inches (38 mm) wide by 6 inches (152 mm) longer than hinge, secured by not less than 6 spot welds.
2. Pivots: Minimum 0.167 inch (4.2 mm) thick by 1-1/2 inches (38 mm) wide by 6 inches (152 mm) longer than hinge, secured by not less than 6 spot welds.
3. Lock Face[**, Flush Bolts,**] Closers, and Concealed Holders: Minimum 0.067 inch (1.7 mm) thick.
4. All Other Surface-Mounted Hardware: Minimum 0.067 inch (1.7 mm) thick.

E. Supports and Anchors: Fabricated from electrolytic zinc-coated or metallic-coated steel sheet.

F. Jamb Anchors:

1. Masonry Type: Adjustable strap-and-stirrup or T-shaped anchors to suit frame size, not less than 0.042 inch (1.0 mm) thick, with corrugated or perforated straps not less than 2 inches (50 mm) wide by 10 inches (250 mm) long; or wire anchors not less than 0.177 inch (4.5 mm) thick.
2. Stud-Wall Type: Designed to engage stud, welded to back of frames; not less than 0.042 inch (1.0 mm) thick.
3. Compression Type for Slip-on Frames: Adjustable compression anchors.
4. Postinstalled Expansion Type for In-Place Concrete or Masonry: Minimum 3/8-inch- (9.5-mm-) diameter bolts with expansion shields or inserts. Provide pipe spacer from frame to wall, with throat reinforcement plate, welded to frame at each anchor location.

G. Floor Anchors: Formed from same material as frames, not less than 0.042 inch (1.0 mm) thick, and as follows:

1. Monolithic Concrete Slabs: Clip-type anchors, with two holes to receive fasteners.
2. Separate Topping Concrete Slabs: Adjustable-type anchors with extension clips, allowing not less than 2-inch (50-mm) height adjustment. Terminate bottom of frames at finish floor surface.

H. Fabricate concealed stiffeners and hardware reinforcement from either cold- or hot-rolled steel sheet.

I. Ceiling Struts: Minimum 3/8-inch-thick by 2-inch- (9.5-mm-thick by 50-mm-) wide steel.

J. Plaster Guards: Formed from same material as frames, not less than 0.016-inch (0.4-mm) thick.

2.5 STOPS AND MOLDINGS

A. Moldings for Glazed Lites in Doors: Minimum 0.032 inch (0.8 mm) thick, fabricated from same material as door face sheet in which they are installed.

B. Fixed Frame Moldings: Formed integral with standard steel frames, minimum 5/8 inch (16 mm) high, unless otherwise indicated.

C. Loose Stops for Glazed Lites in Frames: Minimum 0.032 inch (0.8 mm) thick, fabricated from same material as frames in which they are installed.

D. Hospital Stops: Where indicated on interior door frames, terminate stops 6 inches (152 mm) above finish floor with a [**45**] [**90**]-degree angle cut, and close open end of stop with steel sheet closure. Cover opening in extension of frame with welded-steel filler plate, with welds ground smooth and flush with frame.

1. Provide terminated stops [**where indicated**] [**, unless otherwise indicated**].

2.6 FABRICATION

A. General: Fabricate standard steel doors and frames to be rigid and free of defects, warp, or buckle. Accurately form metal to required sizes and profiles, with minimum radius for thickness of metal. Where practical, fit and assemble units in manufacturer's plant. To ensure proper assembly at Project site, clearly identify work that cannot be permanently factory assembled before shipment.

B. Standard Steel Doors:

1. Exterior Doors: Provide weep-hole openings in bottom of exterior doors to permit moisture to escape. Seal joints in top edges of doors against water penetration.
2. Glazed Lites: Factory cut openings in doors.

C. Standard Steel Frames: Where frames are fabricated in sections due to shipping or handling limitations, provide alignment plates or angles at each joint, fabricated of same thickness metal as frames.

1. Welded Frames: Weld flush face joints continuously; grind, fill, dress, and make smooth, flush, and invisible.
2. [**Sidelight**] [**and**] [**Transom Bar**] Frames: Provide closed tubular members with no visible face seams or joints; fabricated from same material as door frame. Fasten members at crossings and to jambs by butt welding.
3. Provide countersunk, flat- or oval-head exposed screws and bolts for exposed fasteners, unless otherwise indicated.
4. Plaster Guards: Weld guards to frame at back of hardware mortises in frames installed in concrete or masonry.
5. Where installed in masonry, leave vertical mullions in frames open at top for grouting.
6. Floor Anchors: Weld anchors to bottom of jambs and mullions with at least four spot welds per anchor.
7. Jamb Anchors: Provide number and spacing of anchors as follows:

    a. Masonry Type: Locate anchors not more than 18 inches (457 mm) from top and bottom of frame. Space anchors not more than 32 inches (813 mm) o.c. and as follows:

        1) Two anchors per jamb up to 60 inches (1524 mm) in height.
        2) Three anchors per jamb from 60 to 90 inches (1524 to 2286 mm) in height.
        3) Four anchors per jamb from 90 to 120 inches (2286 to 3048 mm) in height.
        4) Four anchors per jamb plus 1 additional anchor per jamb for each 24 inches (610 mm) or fraction thereof more than 120 inches (3048 mm) in height.

    b. Stud-Wall Type: Locate anchors not more than 18 inches (457 mm) from top and bottom of frame. Space anchors not more than 32 inches (813 mm) o.c. and as follows:

        1) Three anchors per jamb up to 60 inches (1524 mm) in height.
        2) Four anchors per jamb from 60 to 90 inches (1524 to 2286 mm) in height.
        3) Five anchors per jamb from 90 to 96 inches (2286 to 2438 mm) in height.
        4) Five anchors per jamb plus 1 additional anchor per jamb for each 24 inches (610 mm) or fraction thereof more than 96 inches (2438 mm) in height.
        5) Two anchors per head for frames more than 42 inches (1066 mm) wide and mounted in metal-stud partitions.

    c. Compression Type: Not less than two anchors in each jamb.
    d. Postinstalled Expansion Type: Locate anchors not more than 6 inches (152 mm) from top and bottom of frame. Space anchors not more than 26 inches (660 mm) o.c.

8. Door Silencers: Except on weather-stripped doors, drill stops to receive door silencers as follows. Provide plastic plugs to keep holes clear during construction.

    a. Single-Door Frames: Drill stop in strike jamb to receive three door silencers.
    b. Double-Door Frames: Drill stop in head jamb to receive two door silencers.

D. Hardware Preparation: Factory prepare standard steel doors and frames to receive templated mortised hardware; include cutouts, reinforcement, mortising, drilling, and tapping, according to the Door Hardware Schedule and templates furnished as specified in Division 8 Section "Door Hardware."

1. Reinforce doors and frames to receive nontemplated mortised and surface-mounted door hardware.
2. Comply with applicable requirements in ANSI A250.6 and ANSI/DHI A115 Series specifications for door and frame preparation for hardware. Locate hardware as indicated on Shop Drawings or, if not indicated, according to ANSI A250.8.

E. Stops and Moldings: Provide stops and moldings around glazed lites where indicated. Form corners of stops and moldings with butted or mitered hairline joints.

1. Single Glazed Lites: Provide fixed stops and moldings welded on secure side of door or frame.
2. Multiple Glazed Lites: Provide fixed and removable stops and moldings such that each glazed lite is capable of being removed independently.
3. Provide fixed frame moldings on outside of exterior and on secure side of interior doors and frames.
4. Provide loose stops and moldings on inside of doors and frames.
5. Coordinate rabbet width between fixed and removable stops with type of glazing and type of installation indicated.

2.7 STEEL FINISHES

A. General: Comply with NAAMM's "Metal Finishes Manual for Architectural and Metal Products" for recommendations for applying and designating finishes.

1. Finish standard steel door and frames after assembly.

B. Metallic-Coated Steel Surface Preparation: Clean surfaces with nonpetroleum solvent so surfaces are free of oil and other contaminants. After cleaning, apply a conversion coating suited to the organic coating to be applied over it. Clean welds, mechanical connections, and abraded areas, and apply galvanizing repair paint specified below to comply with ASTM A 780.

1. Galvanizing Repair Paint: High-zinc-dust-content paint for regalvanizing welds in steel, complying with SSPC-Paint 20.

C. Steel Surface Preparation: Clean surfaces to comply with SSPC-SP 1, "Solvent Cleaning"; remove dirt, oil, grease, or other contaminants that could impair paint bond. Remove mill scale and rust, if present, from uncoated steel; comply with SSPC-SP 3, "Power Tool Cleaning," or SSPC-SP 6/NACE No. 3, "Commercial Blast Cleaning."

D. Factory Priming for Field-Painted Finish: Apply shop primer specified below immediately after surface preparation and pretreatment. Apply a smooth coat of even consistency to provide a uniform dry film thickness of not less than 0.7 mils (0.018 mm).

1. Shop Primer: Manufacturer's standard, fast-curing, lead- and chromate-free primer complying with ANSI A250.10 acceptance criteria; recommended by primer manufacturer for substrate; compatible with substrate and field-applied finish paint system indicated; and providing a sound foundation for field-applied topcoats despite prolonged exposure.

E. Factory-Applied Paint Finish: Manufacturer's standard, complying with ANSI A250.3 for performance and acceptance criteria.

1. Color and Gloss: [**As indicated by manufacturer's designations**] [**Match Architect's sample**] [**As selected by Architect from manufacturer's full range**].

PART 3 - EXECUTION

3.1 EXAMINATION

A. Examine substrates, areas, and conditions, with Installer present, for compliance with requirements for installation tolerances and other conditions affecting performance of standard steel doors and frames.

1. Examine roughing-in for embedded and built-in anchors to verify actual locations of standard steel frame connections before frame installation.
2. For the record, prepare written report, endorsed by Installer, listing conditions detrimental to performance of work.
3. Proceed with installation only after unsatisfactory conditions have been corrected.

3.2 PREPARATION

A. Remove welded-in shipping spreaders installed at factory.

B. Prior to installation and with installation spreaders in place, adjust and securely brace standard steel door frames for squareness, alignment, twist, and plumb to the following tolerances:

1. Squareness: Plus or minus 1/16 inch (1.6 mm), measured at door rabbet on a line 90 degrees from jamb perpendicular to frame head.
2. Alignment: Plus or minus 1/16 inch (1.6 mm), measured at jambs on a horizontal line parallel to plane of wall.
3. Twist: Plus or minus 1/16 inch (1.6 mm), measured at opposite face corners of jambs on parallel lines, and perpendicular to plane of wall.
4. Plumbness: Plus or minus 1/16 inch (1.6 mm), measured at jambs on a perpendicular line from head to floor.

C. Drill and tap doors and frames to receive nontemplated mortised and surface-mounted door hardware.

3.3 INSTALLATION

A. General: Provide doors and frames of sizes, thicknesses, and designs indicated. Install standard steel doors and frames plumb, rigid, properly aligned, and securely fastened in place; comply with Drawings and manufacturer's written instructions.

B. Standard Steel Frames: Install standard steel frames for [**doors**] [**sidelights**] [**transoms**] [**borrowed lights**] and other openings, of size and profile indicated. Comply with SDI 105.

1. Set frames accurately in position; plumbed, aligned, and braced securely until permanent anchors are set. After wall construction is complete, remove temporary braces, leaving surfaces smooth and undamaged.

    a. At fire-protection-rated openings, install frames according to NFPA 80.
    b. Where frames are fabricated in sections due to shipping or handling limitations, field splice at approved locations by welding face joint continuously; grind, fill, dress, and make splice smooth, flush, and invisible on exposed faces.
    c. Install frames with removable glazing stops located on secure side of opening.
    d. Install door silencers in frames before grouting.
    e. Remove temporary braces necessary for installation only after frames have been properly set and secured.
    f. Check plumb, squareness, and twist of frames as walls are constructed. Shim as necessary to comply with installation tolerances.
    g. Apply bituminous coating to backs of frames that are filled with mortar, grout, and plaster containing antifreezing agents.

2. Floor Anchors: Provide floor anchors for each jamb and mullion that extends to floor and secure with postinstalled expansion anchors.

    a. Floor anchors may be set with powder-actuated fasteners instead of postinstalled expansion anchors if so indicated and approved on Shop Drawings.

3. Metal-Stud Partitions: Solidly pack mineral-fiber insulation behind frames.
4. Masonry Walls: Coordinate installation of frames to allow for solidly filling space between frames and masonry with mortar as specified in Division 4 Section "Unit Masonry Assemblies."
5. Concrete Walls: Solidly fill space between frames and concrete with grout. Install grout in lifts and take precautions, including bracing frames, to ensure that frames are not deformed or damaged by grout forces.
6. In-Place Concrete or Masonry Construction: Secure frames in place with postinstalled expansion anchors. Countersink anchors, and fill and make smooth, flush, and invisible on exposed faces.
7. In-Place Gypsum Board Partitions: Secure frames in place with postinstalled expansion anchors through floor anchors at each jamb. Countersink anchors, and fill and make smooth, flush, and invisible on exposed faces.
8. Ceiling Struts: Extend struts vertically from top of frame at each jamb to supporting construction above, unless frame is anchored to masonry or to other structural support at each jamb. Bend top of struts to provide flush contact for securing to supporting construction above. Provide adjustable wedged or bolted anchorage to frame jamb members.
9. Installation Tolerances: Adjust standard steel door frames for squareness, alignment, twist, and plumb to the following tolerances:

    a. Squareness: Plus or minus 1/16 inch (1.6 mm), measured at door rabbet on a line 90 degrees from jamb perpendicular to frame head.
    b. Alignment: Plus or minus 1/16 inch (1.6 mm), measured at jambs on a horizontal line parallel to plane of wall.
    c. Twist: Plus or minus 1/16 inch (1.6 mm), measured at opposite face corners of jambs on parallel lines, and perpendicular to plane of wall.
    d. Plumbness: Plus or minus 1/16 inch (1.6 mm), measured at jambs at floor.

C. Standard Steel Doors: Fit hollow-metal doors accurately in frames, within clearances specified below. Shim as necessary.

1. Non-Fire-Rated Standard Steel Doors:

a. Jambs and Head: 1/8 inch (3 mm) plus or minus 1/16 inch (1.6 mm).
b. Between Edges of Pairs of Doors: 1/8 inch (3 mm) plus or minus 1/16 inch (1.6 mm).
c. Between Bottom of Door and Top of Threshold: Maximum 3/8 inch (9.5 mm).
d. Between Bottom of Door and Top of Finish Floor (No Threshold): Maximum 3/4 inch (19 mm).

2. Fire-Rated Doors: Install doors with clearances according to NFPA 80.
3. Smoke-Control Doors: Install doors according to [**NFPA 105**] [**UBC Standard 7-2**].

D. Glazing: Comply with installation requirements in Division 8 Section "Glazing" and with standard steel door and frame manufacturer's written instructions.

1. Secure stops with countersunk flat- or oval-head machine screws spaced uniformly not more than 9 inches (230 mm) o.c., and not more than 2 inches (50 mm) o.c. from each corner.

3.4 ADJUSTING AND CLEANING

A. Final Adjustments: Check and readjust operating hardware items immediately before final inspection. Leave work in complete and proper operating condition. Remove and replace defective work, including standard steel doors or frames that are warped, bowed, or otherwise unacceptable.

B. Clean grout and other bonding material off standard steel doors and frames immediately after installation.

C. Prime-Coat Touchup: Immediately after erection, sand smooth rusted or damaged areas of prime coat and apply touchup of compatible air-drying primer.

D. Galvannealed Surfaces: Clean abraded areas and repair with galvanizing repair paint according to manufacturer's written instructions.

END OF SECTION 08111

SECTION 08710
FINISH HARDWARE

1- RELATED DOCUMENTS

The general provisions of the Contract, including General and Special Conditions, apply to the work specified in this section.

2- DESCRIPTION OF WORK

The extent of finish hardware is shown on the drawings and in schedules. Finish hardware is hereby defined to include all items known commercially as builders hardware, as required for swing doors, except special types of hardware specified in the same section as the door and door frame.

3. QUALITY ASSURANCE

Manufacturer:

To the greatest extent possible, obtain each kind of hardware (latch and lock sets, hinges, closers, etc.) from only one manufacturer.

Supplier:

Subcontract the furnishing of hardware, only to a recognized builders hardware supplier who has been furnishing hardware for a period of not less than 2 years, and who has in his employment an experienced hardware consultant who is available at all reasonable times during the course of the work, for project hardware consultation to the A/E and Contractor.

Installer:

Assign the installation of hardware to experienced tradesmen either at the door and frame fabrication plant or at the project site at Contractor's option except as otherwise indicated.

Scheduled Designations:

Except as otherwise indicated, the use of one manufacturer's numeric designations system in schedules does not imply that another manufacturer's products will not be acceptable, unless they are not equal in design, size, weight, finish, function, or other quality of significance. However, do not make substitutions after A/E acceptance of final hardware schedule.

4. SUBMITTALS

Manufacturer's Data:

Submit 2 copies of manufacturer's data for each item of finish hardware for approval of A/E. Include whatever information may be necessary to show compliance with requirements, and include instructions for installation and for maintenance of operating parts and exposed finishes.

Hardware Schedule:

Submit 5 copies of the final hardware schedule after preliminary schedule is approved in writing by the A/E. Include a separate key schedule, showing clearly how the A/E final instructions on keying of locks have been fulfilled. Review and acceptance by the A/E does not relieve the Contractor of his exclusive responsibility to fulfill the requirements as shown and specified.

Samples:

Prior to submittal of the final hardware schedule submit for approval of A/E, one sample of each exposed hardware unit, finished as required, and tagged with full description for coordination with the schedule. No hardware shall be ordered, nor shall any work dependent upon approval proceed, until written approval of A/E has been obtained.

Samples will be returned to the Contractor. Units which are acceptable and remain undamaged through submittal, review and field comparison procedures may, after final check of operation, be installed by the Contractor where designated by the A/E. Furnish a record of such installation to the

5. JOB CONDITIONS

Coordination:

Coordinate hardware with other work. Tag each item or package separately, with identification related to the final hardware schedule, and include basic installation instructions in the package. Furnish hardware items of proper design for use on doors and frames of the thicknesses, profile, swing, security and similar requirements indicated, as necessary for proper installation and function, regardless of omissions or conflicts in the information in the contract documents. Deliver individually packaged hardware items at the times and to the locations (shop or field) for installation, as directed by the Contractors.

Templates:

Furnish hardware templates to each fabricator of doors, frames and other work to be factory-prepared for the installation of hardware. Upon request, check the shop drawings of such other work, to confirm that adequate provisions will be made for the proper installation of hardware.

6. HARDWARE MATERIALS AND FABRICATION

Fasteners:

Manufacture hardware to conform to published templates, generally prepared for machine screw installation. Do not provide hardware which has been prepared for self-tapping sheet metal screws, except as specifically indicated.

Furnish screws for installation, with each hardware item. Provide Phillips flat-head screws except as otherwise indicated. Finish exposed screws to match the hardware finish or, if exposed in surfaces of other work, to match the finish of such other work as closely as possible, except as otherwise indicated.

Provide concealed fasteners for hardware units which are exposed when the door is closed, except to the extent to no standard-manufactured units of the type specified are available with concealed fasteners.

Provide fasteners which are compatible with both the unit fastened and the substrate, and which will not cause corrosion or deterioration of hardware, base material or fastener.

7. HARDWARE FINISHES

All hardware will be US 26D, dull chromium plated, except as otherwise noted. Items not available in US 26D shall be supplied in sprayed aluminum finish.

Match the finish of every hardware unit at each door or opening, to the greatest extent possible, and except as otherwise indicated.

The A/E will be the sole judge of whether hardware units match the accepted samples and match each other satisfactorily.

Provide protective lacquer coating on all exposed hardware finishes of brass, bronze and aluminum, except as otherwise indicated.

8. HARDWARE MOUNTING HEIGHTS

Mount hardware units at heights recommended in "Recommended Locations for Builder's Hardware" by NBHA, except as otherwise specifically indicated or required to comply with governing regulations, and except as may be otherwise directed by the

9. INSTALLATION

Install each hardware item in compliance with the manufacturer's instructions and recommendations. Wherever cutting and fitting is required to install hardware onto or into surfaces which are later to be painted or finished in another way, install each item completely and then remove and store in a secure place during the finish application. After completion of the finishes, re-install each item. Do not install surface-mounted items until finishes have been completed on the substrate.

10. ADJUST AND CLEAN

Adjust and check each operating item of hardware and each door, to ensure proper operation or function of every unit. Lubricate moving parts with type lubrication recommended by manufacturer (graphite-type if no other recommended). Replace units which cannot be adjusted and lubricated to operate freely and smoothly as intended for the application made.

Final Adjustment:

Wherever hardware installations is made more than one month prior to acceptance or occupancy of a space or area, return to the work during the week prior to acceptance or occupancy, and make a final check and adjustment of all hardware items in such space or area. Clean and re-lubricate operating items as necessary to restore proper function and finish of hardware and doors. Adjust door control devices to compensate for final operation of ventilating equipment.

Instruct Owner's personnel in proper adjustment and maintenance of hardware and hardware finishes, during the final adjustment of hardware.

11. KEYING SYSTEM

Provide a master keying system. In addition to the permanent system, a construction master keying system shall be incorporated for interim use during construction. Any pertinent keying requirements not specified herein shall be as directed.

Locks and padlocks shall be keyed differently unless otherwise required, and master-keyed (MK) as directed. Three keys shall be provided with each lock or cylinder. Each key shall be stamped with incised figures showing the key change number corresponding with the respective lock or cylinder, and in addition, space shall be provided on each key for the stamping of a code number as prescribed for the keying system.

Keys shall have aluminum numbered tags, one for each key, 1-1/16 inches in diameter, attached to key with aluminum chain link or beads. The scheme for numbering keys shall be furnished by the manufacturer.

END OF SECTION

SECTION 08712 - DOOR HARDWARE (SCHEDULED BY DESCRIBING PRODUCTS)

PART 1 - GENERAL

1.1 RELATED DOCUMENTS

A. Drawings and general provisions of the Contract, including General and Supplementary Conditions and Division 1 Specification Sections, apply to this Section.

1.2 SUMMARY

A. This Section includes the following:

1. Commercial door hardware for the following:

    a. Swinging doors.
    b. Non-fire-rated sliding doors.
    c. Non-fire-rated folding doors.
    d. Other doors to the extent indicated.

2. Cylinders for doors specified in other Sections.
3. Electrified door hardware.

B. Related Sections include the following:

1. Division 8 Section "Standard Steel Doors and Frames" [**for astragals provided as part of fire-rated labeled assemblies**] [**and**] [**for door silencers provided as part of hollow-metal frames**].
2. Division 8 Section "Custom Steel Doors and Frames" [**for astragals provided as part of fire-rated labeled assemblies**] [**and**] [**for door silencers provided as part of hollow-metal frames**].
3. Division 8 Section "Interior Aluminum Frames" for door silencers provided as part of frames.
4. Division 8 Section "Stainless-Steel Doors and Frames" [**for astragals provided as part of fire-rated labeled assemblies**] [**and**] [**for door silencers provided as part of hollow-metal frames**].
5. Division 8 Section "Flush Wood Doors" for [**astragals**] [**and**] [**integral intumescent seals**] provided as part of fire-rated labeled assemblies.
6. Division 8 Section "Stile and Rail Wood Doors" for [**astragals**] [**and**] [**integral intumescent seals**] provided as part of fire-rated labeled assemblies.
7. Division 8 Section "Access Doors and Frames" for access door hardware, [**except**] [**including**] cylinders.
8. Division 8 Section "Steel Detention Doors and Frames" for door silencers provided as part of hollow-metal detention frames.
9. Division 8 Section "Overhead Coiling Doors" for door hardware provided as part of overhead door assemblies.

10. Division 8 Section "Overhead Coiling Grilles" for door hardware provided as part of overhead grille assemblies.
11. Division 8 Section "ICU/CCU Entrance Doors" for entrance door hardware, [**except**] [**including**] cylinders.
12. Division 8 Section "Sound-Control Door Assemblies" for hinges and gasketing provided as part of sound-rated door assemblies.
13. Division 8 Section "Aluminum-Framed Entrances and Storefronts" for entrance door hardware, [**except**] [**including**] cylinders.
14. Division 8 Section "All-Glass Entrances and Storefronts" for entrance door hardware, [**except**] [**including**] cylinders.
15. Division 8 Section "Sliding Automatic Entrance Doors" for entrance door hardware, [**except**] [**including**] cylinders.
16. Division 8 Section "Swinging Automatic Entrance Doors" for entrance door hardware, [**except**] [**including**] cylinders.
17. Division 8 Section "Folding Automatic Entrance Doors" for entrance door hardware, [**except**] [**including**] cylinders.
18. Division 8 Section "Detention Door Hardware" for hardware for detention doors.
19. Division 10 Section "Impact-Resistant Wall Protection" for plastic door protection units that match wall protection units.
20. Division 10 Section "Wire Mesh Partitions" for door hardware for doors in wire mesh partitions, [**except**] [**including**] cylinders.
21. Division 13 Section "Radiation Protection" for lead-lined astragals provided as part of fire-rated labeled assemblies.
22. Division 13 Section "Metal Building Systems" for door hardware, [**except**] [**including**] cylinders.
23. Division 13 Section "Intrusion Detection" for detection devices installed at door openings and provided as part of an intrusion detection system.
24. Division 13 Section "Security Access" for access control devices installed at door openings and provided as part of a security access system.
25. Division 13 Section "Fire Alarm" for connections to building fire alarm system.
26. Division 16 Sections for connections to electrical power system and for low-voltage wiring work.

C. Products furnished, but not installed, under this Section include the following. Coordinating, purchasing, delivering, and scheduling remain requirements of this Section.

1. [**Pivots**] [**thresholds**] [**weather stripping**] [**and**] [**cylinders for locks**] specified in other Sections.
2. Permanent cores to be installed by Owner.

1.3 DOOR HARDWARE ALLOWANCE

A. Door Hardware Selection: Furnish door hardware selected by Architect, in quantities specified in this Section and in Division 1 Section "Allowances."

B. Allowance Bidding: After Architect selects door hardware and issues the door hardware sets, request bids for products and materials.

C. Allowance Award: Architect will select bid from bids furnished by Contractor. Award purchase order to bidder selected.

D. Allowance Adjustment: A Change Order will be issued to adjust difference between door hardware allowance and selected bid from door hardware Installer.

E. Installation: General types and approximate quantities of door hardware are indicated in the list of door hardware sets to provide a basis for the cost of installation and other Work that is part of the Contract Sum but not included in door hardware allowance.

1.4 SUBMITTALS

A. Product Data: Include construction and installation details, material descriptions, dimensions of individual components and profiles, and finishes.

B. Shop Drawings: Details of electrified door hardware, indicating the following:

1. Wiring Diagrams: Power, signal, and control wiring. Include the following:

a. System schematic.
b. Point-to-point wiring diagram.
c. Riser diagram.
d. Elevation of each door.

2. Detail interface between electrified door hardware and [**fire alarm**] [**access control**] [**security**] [**building control**] system.
3. Operation Narrative: Describe the operation of doors controlled by electrified door hardware.

C. Samples for Initial Selection: For each finish, color, and texture required for each type of door hardware indicated.

D. Samples for Verification: Submit minimum 2-by-4-inch (51-by-102-mm) plate Samples of each type of finish required, except primed finish.

E. Samples for Verification: For exposed door hardware of each type, in specified finish, full size. Tag with full description for coordination with the door hardware sets. Submit Samples before, or concurrent with, submission of the final door hardware sets.

1. Samples will be returned to Contractor. Units that are acceptable and remain undamaged through submittal, review, and field comparison process may, after final check of operation, be incorporated into the Work, within limitations of keying requirements.

F. Product Certificates: For electrified door hardware, signed by product manufacturer.

1. Certify that door hardware approved for use on types and sizes of labeled fire doors complies with listed fire door assemblies.

G. Qualification Data: For [**Installer**] [**Architectural Hardware Consultant**].

H. Product Test Reports: Based on evaluation of comprehensive tests performed by manufacturer and witnessed by a qualified testing agency, for [**locks**] [**latches**] [**delayed-egress locks**] [**and**] [**closers**].

I. Maintenance Data: For each type of door hardware to include in maintenance manuals. Include final [**hardware**] [**and**] [**keying**] schedule.

J. Warranty: Special warranty specified in this Section.

K. Other Action Submittals:

1. Door Hardware Sets: Prepared by or under the supervision of [**Installer**] [**Architectural Hardware Consultant**], detailing fabrication and assembly of door hardware, as well as procedures and diagrams. Coordinate the final door hardware sets with doors, frames, and related work to ensure proper size, thickness, hand, function, and finish of door hardware.

a. Format: Comply with scheduling sequence and vertical format in DHI's "Sequence and Format for the Hardware Schedule." Double space entries, and number and date each page.
b. Format: Use same scheduling sequence and format[**and use same door numbers**] as in the Contract Documents.
c. Content: Include the following information:

1) Identification number, location, hand, fire rating, and material of each door and frame.
2) Type, style, function, size, quantity, and finish of each door hardware item.[**Include description and function of each lockset and exit device.**]
3) Complete designations of every item required for each door or opening including name and manufacturer.
4) Fastenings and other pertinent information.
5) Location of each door hardware set, cross-referenced to Drawings, both on floor plans and in door and frame schedule.
6) Explanation of abbreviations, symbols, and codes contained in schedule.
7) Mounting locations for door hardware.
8) Door and frame sizes and materials.
9) Description of each electrified door hardware function, including location, sequence of operation, and interface with other building control systems.

a) Sequence of Operation: Include description of component functions that occur in the following situations: authorized person wants to enter; authorized person wants to exit; unauthorized person wants to enter; unauthorized person wants to exit.

10) List of related door devices specified in other Sections for each door and frame.

d. Submittal Sequence: Submit the final door hardware sets at earliest possible date, particularly where approval of the door hardware sets must precede fabrication of other work that is critical in Project construction schedule. Include Product Data, Samples, Shop Drawings of other work affected by door hardware, and other information essential to the coordinated review of the door hardware sets.
e. Submittal Sequence: Submit initial draft of final schedule along with essential Product Data to facilitate the fabrication of other work that is critical in Project construction schedule. Submit the final door hardware sets after Samples, Product

Data, coordination with Shop Drawings of other work, delivery schedules, and similar information has been completed and accepted.

2. Keying Schedule: Prepared by or under the supervision of [**Installer**] [**Architectural Hardware Consultant**], detailing Owner's final keying instructions for locks. Include schematic keying diagram and index each key set to unique door designations.

1.5 QUALITY ASSURANCE

A. Installer Qualifications: An employer of workers trained and approved by lock manufacturer.

1. Installer's responsibilities include supplying and installing door hardware, and providing a qualified Architectural Hardware Consultant available during the course of the Work to consult with Contractor, Architect, and Owner about door hardware and keying.
2. Installer shall have warehousing facilities in Project's vicinity.
3. Scheduling Responsibility: Preparation of door hardware and keying schedules.
4. Engineering Responsibility: Preparation of data for electrified door hardware, including Shop Drawings, based on testing and engineering analysis of manufacturer's standard units in assemblies similar to those indicated for this Project.

B. Architectural Hardware Consultant Qualifications: A person who is currently certified by DHI as an Architectural Hardware Consultant and who is experienced in providing consulting services for door hardware installations that are comparable in material, design, and extent to that indicated for this Project.

1. Electrified Door Hardware Consultant Qualifications: A qualified Architectural Hardware Consultant who is experienced in providing consulting services for electrified door hardware installations.

C. Source Limitations: Obtain each type and variety of door hardware from a single manufacturer, unless otherwise indicated.

1. Provide electrified door hardware from same manufacturer as mechanical door hardware, unless otherwise indicated. Manufacturers that perform electrical modifications and that are listed by a testing and inspecting agency acceptable to authorities having jurisdiction are acceptable.

D. Fire-Rated Door Assemblies: Assemblies complying with NFPA 80 that are listed and labeled by a testing and inspecting agency acceptable to authorities having jurisdiction, for fire ratings indicated, based on testing according to [**NFPA 252**] [**UBC Standard 7-2**].

1. Test Pressure: [**Test at atmospheric pressure**] [**After 5 minutes into the test, neutral pressure level in furnace shall be established at 40 inches (1016 mm) or less above the sill**].

E. Electrified Door Hardware: Listed and labeled as defined in NFPA 70, Article 100, by a testing agency acceptable to authorities having jurisdiction.

F. Keying Conference: Conduct conference at Project site to comply with requirements in Division 1 Section "Project Management and Coordination." In addition to

Owner[**, Construction Manager,**] Contractor, and Architect, conference participants shall also include Installer's Architectural Hardware Consultant[**and Owner's security consultant**]. Incorporate keying conference decisions into final keying schedule after reviewing door hardware keying system including, but not limited to, the following:

1. Function of building, flow of traffic, purpose of each area, degree of security required, and plans for future expansion.
2. Preliminary key system schematic diagram.
3. Requirements for key control system.
4. Address for delivery of keys.
5. <**Insert requirements to suit Project.**>

G. Preinstallation Conference: Conduct conference at Project site to comply with requirements in Division 1 Section "Project Management and Coordination."

H. Preinstallation Conference: Conduct conference at Project site to comply with requirements in Division 1 Section "Project Management and Coordination." Review methods and procedures related to electrified door hardware including, but not limited to, the following:

1. Inspect and discuss electrical roughing-in and other preparatory work performed by other trades.
2. Review sequence of operation for each type of electrified door hardware.
3. Review and finalize construction schedule and verify availability of materials, Installer's personnel, equipment, and facilities needed to make progress and avoid delays.
4. Review required testing, inspecting, and certifying procedures.

1.6 DELIVERY, STORAGE, AND HANDLING

A. Inventory door hardware on receipt and provide secure lock-up for door hardware delivered to Project site.

B. Tag each item or package separately with identification related to the final door hardware sets, and include basic installation instructions, templates, and necessary fasteners with each item or package.

C. Deliver keys to manufacturer of key control system for subsequent delivery to Owner.

D. Deliver keys[**and permanent cores**] to Owner by registered mail or overnight package service.

1. <**Insert name and address of Owner's representative.**>

1.7 COORDINATION

A. Coordinate layout and installation of recessed [**pivots**] [**and**] [**closers**] with floor construction. Cast anchoring inserts into concrete. Concrete, reinforcement, and formwork requirements are specified in Division 3.

B. Templates: Distribute door hardware templates for doors, frames, and other work specified to be factory prepared for installing door hardware. Check Shop Drawings of other work to

confirm that adequate provisions are made for locating and installing door hardware to comply with indicated requirements.

C. Electrical System Roughing-in: Coordinate layout and installation of electrified door hardware with connections to [**power supplies**] [**fire alarm system and detection devices**] [**access control system**] [**security system**] [**building control system**].

D. Existing Openings: Where new hardware components are scheduled for application to existing construction or where modifications to existing door hardware are required, field verify existing conditions and coordinate installation of door hardware to suit opening conditions and to provide for proper operation.

1.8 WARRANTY

A. Special Warranty: Manufacturer's standard form in which manufacturer agrees to repair or replace components of door hardware that fail in materials or workmanship within specified warranty period.

1. Failures include, but are not limited to, the following:

a. Structural failures including excessive deflection, cracking, or breakage.
b. Faulty operation of operators and door hardware.
c. Deterioration of metals, metal finishes, and other materials beyond normal weathering and use.

2. Warranty Period: [**Three**] <**Insert number**> years from date of Substantial Completion, except as follows:

a. [**Electromagnetic**] [**Delayed-Egress**] Locks: [**Five**] <**Insert number**> years from date of Substantial Completion.
b. Exit Devices: [**Two**] <**Insert number**> years from date of Substantial Completion.
c. Manual Closers: [**10**] <**Insert number**> years from date of Substantial Completion.
d. Concealed Floor Closers: [**Five**] [**10**] [**25**] <**Insert number**> years from date of Substantial Completion.

1.9 MAINTENANCE SERVICE

A. Maintenance Tools and Instructions: Furnish a complete set of specialized tools and maintenance instructions as needed for Owner's continued adjustment, maintenance, and removal and replacement of door hardware.

B. Maintenance Service: Beginning at Substantial Completion, provide [**six**] <**Insert number**> months' full maintenance by skilled employees of door hardware Installer. Include quarterly preventive maintenance, repair or replacement of worn or defective components, lubrication, cleaning, and adjusting as required for proper door hardware operation. Provide parts and supplies same as those used in the manufacture and installation of original products.

1.10 EXTRA MATERIALS

A. Furnish full-size units of door hardware described below, before installation begins, that match products installed and that are packaged with protective covering for storage and identified with labels describing contents.

1. Door Hardware: <**Insert detailed descriptions and specific numbers of units.**>
2. Electrical Parts: <**Insert detailed descriptions and specific numbers of units.**>

PART 2 - PRODUCTS

2.1 SCHEDULED DOOR HARDWARE

A. General: Provide door hardware for each door to comply with requirements in this Section[**and door hardware sets indicated in door and frame schedule**] [**and door hardware sets indicated in Part 3 "Door Hardware Sets" Article**].

1. Door Hardware Sets: Provide quantity, item, size, finish or color indicated.
2. Sequence of Operation: Provide electrified door hardware function, sequence of operation, and interface with other building control systems indicated.

B. Designations: Requirements for design, grade, function, finish, size, and other distinctive qualities of each type of door hardware are indicated in Part 3 "Door Hardware Sets" Article. Products are identified by descriptive titles corresponding to requirements specified in Part 2.

C. In other Part 2 articles where titles below introduce lists, the following requirements apply to product selection:

1. Available Manufacturers: Subject to compliance with requirements, manufacturers offering products that may be incorporated into the Work include, but are not limited to, manufacturers specified.
2. Manufacturers: Subject to compliance with requirements, provide products by the manufacturers specified.

2.2 HINGES, GENERAL

A. Quantity: Provide the following, unless otherwise indicated:

1. Two Hinges: For doors with heights up to 60 inches (1524 mm).
2. Three Hinges: For doors with heights 61 to 90 inches (1549 to 2286 mm).
3. Four Hinges: For doors with heights 91 to 120 inches (2311 to 3048 mm).
4. For doors with heights more than 120 inches (3048 mm), provide 4 hinges, plus 1 hinge for every 30 inches (750 mm) of door height greater than 120 inches (3048 mm).

B. Template Requirements: Except for hinges and pivots to be installed entirely (both leaves) into wood doors and frames, provide only template-produced units.

C. Hinge Weight: Unless otherwise indicated, provide the following:

1. Entrance Doors: Heavy-weight hinges.
2. Doors with Closers: Antifriction-bearing hinges.
3. Interior Doors: Standard-weight hinges.

D. Hinge Base Metal: Unless otherwise indicated, provide the following:

1. Exterior Hinges: [**Stainless steel, with stainless-steel pin**] [**Brass, with stainless-steel pin body and brass protruding heads**].
2. Interior Hinges: [**Brass, with stainless-steel pin body and brass protruding heads**] [**Steel, with steel pin**] [**Stainless steel, with stainless-steel pin**].
3. Hinges for Fire-Rated Assemblies: [**Steel, with steel pin**] [**Stainless steel, with stainless-steel pin**].

E. Hinge Options: Where indicated in door hardware sets or on Drawings:

1. Hospital Tips: Slope ends of hinge barrel.
2. Decorator Tips: [**Oval**] [**Ball**] [**Steeple**] [**Urn**] [**Acorn**].
3. Safety Stud: Designed for stud in one leaf to engage hole in opposing leaf.
4. Maximum Security Pin: Fix pin in hinge barrel after it is inserted.
5. Nonremovable Pins: Provide set screw in hinge barrel that, when tightened into a groove in hinge pin, prevents removal of pin while door is closed; for [**outswinging exterior doors**] [**and**] [**outswinging corridor doors with locks**].
6. Corners: [**Square**] [**5/32-inch (4-mm) radius**] [**1/4-inch (6-mm) radius**] [**5/8-inch (16-mm) radius**].

F. Electrified Functions for Hinges: Comply with the following:

1. Power Transfer: Concealed PTFE-jacketed wires, secured at each leaf and continuous through hinge knuckle.
2. Monitoring: Concealed electrical monitoring switch.
3. Power Transfer and Monitoring: Concealed PTFE-jacketed wires, secured at each leaf and continuous through hinge knuckle, and with concealed electrical monitoring switch.

G. Fasteners: Comply with the following:

1. Machine Screws: For metal doors and frames. Install into drilled and tapped holes.
2. Wood Screws: For wood doors and frames.
3. Threaded-to-the-Head Wood Screws: For fire-rated wood doors.
4. Screws: Phillips flat-head; [**machine screws (drilled and tapped holes) for metal doors**] [**wood screws for wood doors and frames**]. Finish screw heads to match surface of hinges.

2.3 HINGES

A. Butts and Hinges: Listed under Category A in BHMA's "Certified Product Directory."

B. Template Hinge Dimensions: BHMA A156.7.

C. [**Available**]Manufacturers:

1. Baldwin Hardware Corporation.
2. Bommer Industries, Inc.
3. Cal-Royal Products, Inc.
4. Hager Companies.
5. Lawrence Brothers, Inc.
6. McKinney Products Company; an ASSA ABLOY Group company.
7. PBB, Inc.
8. Stanley Commercial Hardware; Div. of The Stanley Works.
9. <**Insert manufacturer's name.**>

D. Antifriction-Bearing, Full-Mortise (Butt) Hinges: BHMA A156.1, [**heavy weight; Grade 1, with 4 ball bearings**] [**standard weight; Grade 2, with 2 ball bearings**]; button tips; nonrising removable pins; and base metal as follows:

1. Base Metal: [**Cast, forged, or extruded brass or bronze**] [**Wrought brass or bronze**] [**Stainless steel**] [**Wrought, forged, or cast steel, or malleable iron**].

E. Antifriction-Bearing, Swing-Clear, Full-Mortise (Butt) Hinges: BHMA A156.1, [**heavy weight; Grade 1, with 4 ball bearings**] [**standard weight; Grade 2, with 2 ball bearings**]; button tips; nonrising removable pins; reversible; with 3/32-inch (2.4-mm) swaging; wrought, forged, or cast steel, or malleable iron.

F. Plain-Bearing, Standard-Weight, Full-Mortise (Butt) Hinges: BHMA A156.1, Grade 3, button tips, nonrising removable pins, and base metal as follows:

1. Base Metal: [**Cast, forged, or extruded brass or bronze**] [**Wrought brass or bronze**] [**Stainless steel**] [**Wrought, forged, or cast steel, or malleable iron**].

G. Plain-Bearing, Swing-Clear, Standard-Weight, Full-Mortise (Butt) Hinges: BHMA A156.1, Grade 3, button tips, nonrising removable pins, reversible; wrought, forged, or cast steel, or malleable iron.

H. Friction-Type, Heavy-Weight, Full-Mortise (Butt) Hinges: BHMA A156.1, Grade 1, with adjustable friction discs or bearings; wrought, forged, or cast steel, or malleable iron.

I. Antifriction-Bearing, Heavy-Weight, Full-Mortise, Slip-in-Type Hinges: BHMA A156.1, Grade 1, equipped with 4 ball bearings, with [**5/16-inch (7.9-mm) swaging**] [**3/16-inch (4.8-mm) swaging, handed,**] and base metal as follows:

1. Base Metal: [**Wrought brass or bronze**] [**Wrought, forged, or cast steel, or malleable iron**].

J. Antifriction-Bearing, Standard-Weight, Full-Mortise, Slip-in-Type Hinges: BHMA A156.1, Grade 2, equipped with 2 ball bearings, with [**5/16-inch (7.9-mm) swaging**] [**3/16-inch (4.8-mm) swaging, handed,**] and base metal as follows:

1. Base Metal: [**Wrought brass or bronze**] [**Wrought, forged, or cast steel, or malleable iron**].

K. Plain-Bearing, Standard-Weight, Full-Mortise, Slip-in-Type Hinges: BHMA A156.1, Grade 3, with [**5/16-inch (7.9-mm) swaging**] [**3/16-inch (4.8-mm) swaging, handed,**] and base metal as follows:

1. Base Metal: [**Wrought brass or bronze**] [**Wrought, forged, or cast steel, or malleable iron**].

L. Antifriction-Bearing, Half-Mortise Hinges: BHMA A156.1, [**heavy weight; Grade 1, with 4 ball bearings**] [**standard weight; Grade 2, with 2 ball bearings**]; button tips; nonrising removable pins; reversible; and base metal as follows:

1. Base Metal: [**Wrought brass or bronze**] [**Stainless steel**] [**Wrought, forged, or cast steel, or malleable iron**].

M. Antifriction-Bearing, Swing-Clear, Heavy-Weight, Half-Mortise Hinges: BHMA A156.1, Grade 1, button tips, nonrising removable pins, reversible, equipped with 4 ball bearings; wrought, forged, or cast steel, or malleable iron.

N. Plain-Bearing, Standard-Weight, Half-Mortise Hinges: BHMA A156.1, Grade 3, button tips, nonrising removable pins, reversible, and base metal as follows:

1. Base Metal: [**Wrought brass or bronze**] [**Stainless steel**] [**Wrought, forged, or cast steel, or malleable iron**].

O. Antifriction-Bearing, Full-Surface Hinges: BHMA A156.1, [**heavy weight; Grade 1, with 4 ball bearings**] [**narrow, heavy weight; Grade 1, with 4 ball bearings**] [**standard weight; Grade 2, with 2 ball bearings**]; button tips; nonrising removable pins; reversible; and base metal as follows:

1. Base Metal: [**Wrought brass or bronze**] [**Stainless steel**] [**Wrought, forged, or cast steel, or malleable iron**].

P. Antifriction-Bearing, Swing-Clear, Heavy-Weight, Full-Surface Hinges: BHMA A156.1, Grade 1, button tips, nonrising removable pins, reversible, equipped with 4 ball bearings; wrought, forged, or cast steel, or malleable iron.

Q. Plain-Bearing, Standard-Weight, Full-Surface Hinges: BHMA A156.1, Grade 3, button tips, nonrising removable pins, and base metal as follows:

1. Base Metal: [**Wrought brass or bronze**] [**Wrought, forged, or cast steel, or malleable iron**].

R. Antifriction-Bearing, Half-Surface Hinges: BHMA A156.1, [**heavy weight; Grade 1, with 4 ball bearings**] [**standard weight; Grade 2, with 2 ball bearings**]; button tips; nonrising removable pins; reversible; and base metal as follows:

1. Base Metal: [**Wrought brass or bronze**] [**Stainless steel**] [**Wrought, forged, or cast steel, or malleable iron**].

S. Antifriction-Bearing, Swing-Clear, Heavy-Weight, Half-Surface Hinges: BHMA A156.1, Grade 1, button tips, nonrising removable pins, reversible, equipped with 4 ball bearings; wrought, forged, or cast steel, or malleable iron.

T. Plain-Bearing, Standard-Weight, Half-Surface Hinges: BHMA A156.1, Grade 3, button tips, nonrising removable pins, reversible, and base metal as follows:

1. Base Metal: [**Wrought brass or bronze**] [**Wrought, forged, or cast steel, or malleable iron**].

U. Pivot-Reinforced Hinge and Hinge Sets: BHMA A156.1, Grade 1; consisting of one pivot-reinforced hinge plus two full-mortise hinges; heavy weight, antifriction bearing, handed; nonremovable pins; and base metal as follows:

1. Base Metal: [**Wrought brass or bronze**] [**Stainless steel**] [**Wrought, forged, or cast steel, or malleable iron**].

V. Anchor Hinge and Hinge Sets: BHMA A156.1, Grade 1; consisting of one anchor hinge plus two full-mortise hinges; heavy weight, antifriction bearing, handed; nonremovable pins; and base metal as follows:

1. Base Metal: [**Wrought brass or bronze**] [**Stainless steel**] [**Wrought, forged, or cast steel, or malleable iron**].

W. Thrust-Pivot Unit and Hinge Sets: BHMA A156.1, Grade 1; consisting of one thrust-pivot unit plus three full-mortise hinges; heavy weight, antifriction bearing, handed; nonremovable pins; and base metal as follows:

1. Base Metal: [**Wrought brass or bronze**] [**Stainless steel**] [**Wrought, forged, or cast steel, or malleable iron**].

X. Olive-Knuckle Hinges: BHMA A156.1, antifriction bearing, full mortise, [**heavy weight; Grade 1**] [**standard weight; Grade 2**], equipped with bearing unit, handed; only knuckle visible when door is closed; and base metal as follows:

1. Base Metal: [**Cast, forged, or extruded brass or bronze**] [**Wrought, forged, or cast steel, or malleable iron**].

Y. Antifriction-Bearing, Heavy-Weight, Pivot Hinges: BHMA A156.1, Grade 1, full mortise, equipped with concealed bearing unit, handed; only knuckle visible when door is closed; and base metal as follows:

1. Base Metal: [**Cast, forged, or extruded brass or bronze**] [**Wrought steel**].

Z. Antifriction-Bearing, Standard-Weight, Pivot Hinges: BHMA A156.1, Grade 2, full mortise, equipped with concealed bearing unit, handed; only knuckle visible when door is closed; wrought steel.

AA. Pocket Hinges: Heavy weight; antifriction bearing; BHMA A156.1, Grade 1; jamb leaf visible when door is closed and both leaves concealed when door is in pocket; type and size required for application indicated; and base metal as follows:

1. Base Metal: [**Cast, forged, or extruded brass or bronze**] [**Stainless steel**] [**Wrought, forged, or cast steel, or malleable iron**].

2.4 SPRING HINGES

A. Self-Closing Hinges: Listed under Category A in BHMA's "Certified Product Directory."

B. [**Available**]Manufacturers:

1. Baldwin Hardware Corporation.
2. Bommer Industries, Inc.
3. Cal-Royal Products, Inc.
4. Hager Companies.
5. Lawrence Brothers, Inc.
6. McKinney Products Company; an ASSA ABLOY Group company.
7. PBB, Inc.
8. Stanley Commercial Hardware; Div. of The Stanley Works.
9. <**Insert manufacturer's name.**>

C. Single-Acting, Full-Mortise, Spring Hinges: BHMA A156.17[**, Grade 1**] [**, Grade 2**], wrought steel, with torsion spring[**; listed for use on fire doors**].

D. Single-Acting, Full-Surface, Spring Hinges: BHMA A156.17[**, Grade 1**] [**, Grade 2**], wrought steel, with torsion spring.

E. Single-Acting, Half-Surface, Spring Hinges: BHMA A156.17[**, Grade 1**] [**, Grade 2**], wrought steel, with torsion spring[**; listed for use on fire doors**].

F. Double-Acting, Mortised-in-Door, Spring Hinges: BHMA A156.17[**, Grade 1**] [**, Grade 2**], surface applied to jamb; adjustable tension, torsion springs; wrought steel.

G. Double-Acting, Half-Surface, Spring Hinges: BHMA A156.17[**, Grade 1**] [**, Grade 2**], adjustable tension, torsion springs; wrought steel.

2.5 PIVOTS AND PIVOT HINGES

A. Pivots: Listed under Category C in BHMA's "Certified Product Directory."

B. Self-Closing Pivots: Listed under Category A in BHMA's "Certified Product Directory."

C. [**Available**]Manufacturers:

1. Bommer Industries, Inc.
2. DORMA Architectural Hardware; Member of The DORMA Group North America.
3. Glynn-Johnson; an Ingersoll-Rand Company.
4. Hager Companies.
5. IVES Hardware; an Ingersoll-Rand Company.
6. McKinney Products Company; an ASSA ABLOY Group company.
7. Rixson Specialty Door Controls; an ASSA ABLOY Group company.
8. Stanley Commercial Hardware; Div. of The Stanley Works.

9. <**Insert manufacturer's name.**>

D. Double-Acting Door Pivots: BHMA A156.4, Grade 2, consisting of one top and one bottom assembly with bearings; nonferrous bottom jamb bracket; wrought brass or bronze.

E. Double-Acting, Door Pivots: BHMA A156.4, Grade 2, stainless-steel or polycarbonate top and bottom, each a walking-type, cam-operated pivot; [**surface**] [**flush**] mounted.

F. Single-Acting, Center-Hung, Door Pivots: BHMA A156.4, Grade [**2**] [**3**], wrought-brass or bronze top and bottom units, each containing rack-and-pinion assemblies permitting door to open 105 degrees; reversible.

G. Center Pivot Sets: BHMA A156.4, Grade 1, type and size required for application indicated; complying with the following:

1. Top Pivots: Walking-beam type with retractable pin and oil-impregnated bronze bearing; mortised into door and frame.
2. Bottom Pivots: [**Surface floor mounted,**] [**Recessed in floor in cement case,**] [**Mortised into jamb,**] and mortised into door; with [**thrust ball**] [**needle**] bearing.
3. Base Metal: [**Brass**] [**Bronze**] [**Steel**].

H. Offset Pivot Sets: BHMA A156.4, Grade [**1**] [**2**], type and size required for application indicated; complying with the following:

1. Offset: [**3/4 inch (19 mm)**] [**1-1/2 inches (38 mm)**].
2. Fire Rated: Listed for use with labeled fire doors where indicated.
3. Top Pivots: Walking-beam type with retractable pin and oil-impregnated bronze bearing; mortised into door and frame[**; with asylum-type upper surface**].
4. Bottom Pivots: [**Surface floor mounted,**] [**Recessed in floor in cement case,**] [**Mortised into jamb,**] and mortised into door; with [**thrust ball**] [**needle**] bearing.
5. Base Metal: [**Brass**] [**Bronze**] [**Stainless steel**] [**Steel**].

I. Intermediate Pivot Sets: BHMA A156.4, Grade 1, type and size required for application indicated; with oil-impregnated bronze bearing; complying with the following:

1. Offset: [**3/4 inch (19 mm)**] [**1-1/2 inches (38 mm)**].
2. Mounting: [**Full mortise**] [**Half mortise**] [**Half surface**] [**Full surface**].
3. Knuckle: [**Standard**] [**Asylum type**].
4. Fire Rated: Listed for use with labeled fire doors where indicated.
5. Base Metal: [**Brass**] [**Bronze**] [**Stainless steel**] [**Steel**].
6. Electrified Functions: As follows:

a. Power Transfer: Concealed PTFE-jacketed wires, secured at each leaf and continuous through hinge knuckle.
b. Monitoring: Concealed electrical monitoring switch.

J. Double-Acting, Gate-Spring Pivot: BHMA A156.17, Grade 1, mortise application, [**adjustable**] [**fixed**] tension, and base metal as follows:

1. Base Metal: [**Cast, forged, or extruded brass or bronze**] [**Malleable iron**].

K. Double-Acting, Gravity Pivot: BHMA A156.17, Grade 1, malleable iron, surface applied, [**adjustable**] [**fixed**] tension.

2.6 CONTINUOUS HINGES

A. Standard: BHMA A156.26[**, Grade 1-150**] [**, Grade 1-300**] [**, Grade 1-600**] [**, Grade 2-150**] [**, Grade 2-300**] [**, Grade 2-600**] [**, Grade 3-150**] [**, Grade 3-300**].

1. Continuous Hinges: Listed under Category N in BHMA's "Certified Product Directory."

B. General: Minimum 0.120-inch- (3.0-mm-) thick, hinge leaves with minimum overall width of 4 inches (102 mm); fabricated to full height of door and frame and to template screw locations; with components finished after milling and drilling are complete.

1. Fire Pins: Steel pins to hold labeled fire doors in place if required by tested listing.

C. Continuous, Barrel-Type Hinges: Hinge with knuckles formed around a pin that extends entire length of hinge.

1. Base Metal for Exterior Hinges: Stainless steel.
2. Base Metal for Interior Hinges: [**Stainless steel**] [**Steel**] [**Aluminum**].
3. Base Metal for Hinges for Fire-Rated Assemblies: [**Stainless steel**] [**Steel**].
4. [**Available**]Manufacturers:

    a. Hager Companies.
    b. Markar Architectural Products, Inc.; a Subsidiary of Adams Rite Manufacturing Co.
    c. McKinney Products Company; an ASSA ABLOY Group company.
    d. Stanley Commercial Hardware; Div. of The Stanley Works.
    e. Zero International.
    f. <**Insert manufacturer's name.**>

D. Continuous, Gear-Type Hinges: Extruded-aluminum, pinless, geared hinge leaves; joined by a continuous extruded-aluminum channel cap; with concealed, self-lubricating thrust bearings.

1. Type: [**Fully concealed**] [**Swing clear**] [**Full surface, with removable continuous caps over fasteners**] [**Half surface, with removable continuous cap over fasteners**].
2. [**Available**]Manufacturers:

    a. Bommer Industries, Inc.
    b. Hager Companies.
    c. McKinney Products Company; an ASSA ABLOY Group company.
    d. Pemko Manufacturing Co.
    e. Select Products Limited.
    f. Zero International.
    g. <**Insert manufacturer's name.**>

2.7 LOCKS AND LATCHES, GENERAL

A. Accessibility Requirements: Where indicated to comply with accessibility requirements, comply with [**the U.S. Architectural & Transportation Barriers Compliance Board's "Americans with Disabilities Act (ADA), Accessibility Guidelines for Buildings and Facilities (ADAAG)."**] [**ANSI A117.1.**] [**FED-STD-795, "Uniform Federal Accessibility Standards."**] <**Insert local regulation.**>

1. Provide operating devices that do not require tight grasping, pinching, or twisting of the wrist and that operate with a force of not more than 5 lbf (22 N).

B. Latches and Locks for Means of Egress Doors: Comply with NFPA 101. Latches shall not require more than 15 lbf (67 N) to release the latch. Locks shall not require use of a key, tool, or special knowledge for operation.

C. Electrified Locking Devices: BHMA A156.25.

D. Lock Trim:

1. Levers: [**Wrought**] [**Forged**] [**Cast**].

a. <**Insert model number and description.**>

2. Knobs: [**Wrought**] [**Forged**] [**Cast**].
3. Escutcheons (Roses): [**Wrought**] [**Forged**] [**Cast**].
4. Dummy Trim: Match [**knob**] [**lever**] lock trim and escutcheons.
5. Lockset Designs: [**Provide design indicated on Drawings**] <**Insert name(s) of manufacturer(s) and product name(s) designating lockset design(s) that other manufacturers must match**> or, if sets are provided by another manufacturer, provide designs that match those designated.

E. Lock Throw: Comply with testing requirements for length of bolts required for labeled fire doors, and as follows:

1. Bored Locks: Minimum 1/2-inch (13-mm) latchbolt throw.
2. Mortise Locks: Minimum 3/4-inch (19-mm) latchbolt throw.
3. Deadbolts: Minimum 1-inch (25-mm) bolt throw.

F. Rabbeted Meeting Doors: Provide special rabbeted front and strike on locksets for rabbeted meeting stiles.

G. Backset: 2-3/4 inches (70 mm), unless otherwise indicated.

H. Strikes: Manufacturer's standard strike with strike box for each latchbolt or lock bolt, with curved lip extended to protect frame, finished to match door hardware set, and as follows:

1. Strikes for Bored Locks and Latches: BHMA A156.2.
2. Strikes for Mortise Locks and Latches: BHMA A156.13.
3. Strikes for Interconnected Locks and Latches: BHMA A156.12.
4. Strikes for Auxiliary Deadlocks: BHMA A156.5.

5. Flat-Lip Strikes: For locks with three-piece antifriction latchbolts, as recommended by manufacturer.
6. Extra-Long-Lip Strikes: For locks used on frames with applied wood casing trim.
7. Aluminum-Frame Strike Box: Manufacturer's special strike box fabricated for aluminum framing.

2.8 MECHANICAL LOCKS AND LATCHES

A. Lock Functions: Function numbers and descriptions indicated in door hardware sets comply with the following:

1. Bored Locks: BHMA A156.2.
2. Mortise Locks: BHMA A156.13.
3. Interconnected Locks: BHMA A156.12.

B. Bored Locks: BHMA A156.2[**, Grade 1**] [**, Grade 2**] [**, Grade 1 unless Grade 2 is indicated**]; Series 4000.[**Listed under Category F in BHMA's "Certified Product Directory."**]

1. [**Available**]Manufacturers:

a. Arrow USA; an ASSA ABLOY Group company.
b. Best Access Systems; Div. of The Stanley Works.
c. Cal-Royal Products, Inc.
d. Corbin Russwin Architectural Hardware; an ASSA ABLOY Group company.
e. Falcon Lock; an Ingersoll-Rand Company.
f. Marks USA.
g. Medeco Security Locks, Inc.; an ASSA ABLOY Group company.
h. PDQ Manufacturing.
i. SARGENT Manufacturing Company; an ASSA ABLOY Group company.
j. Schlage Commercial Lock Division; an Ingersoll-Rand Company.
k. Security Door Controls.
l. Weiser Lock; a Masco Company.
m. Yale Commercial Locks and Hardware; an ASSA ABLOY Group company.
n. <**Insert manufacturer's name.**>

C. Mortise Locks: Stamped steel case with steel or brass parts; BHMA A156.13[**, Grade 1**] [**, Grade 2**] [**, Grade 1 unless Grade 2 is indicated**]; Series 1000.[**Listed under Category F in BHMA's "Certified Product Directory."**]

1. [**Available**]Manufacturers:

a. Accurate Lock & Hardware Co.
b. Adams Rite Manufacturing Co.
c. Arrow USA; an ASSA ABLOY Group company.
d. Best Access Systems; Div. of The Stanley Works.
e. Cal-Royal Products, Inc.
f. Corbin Russwin Architectural Hardware; an ASSA ABLOY Group company.
g. Folger Adam Security, Inc.; an ASSA ABLOY Group company.
h. Falcon Lock; an Ingersoll-Rand Company.
i. Marks USA.

j. PDQ Manufacturing.
k. SARGENT Manufacturing Company; an ASSA ABLOY Group company.
l. Schlage Commercial Lock Division; an Ingersoll-Rand Company.
m. Security Door Controls.
n. Yale Commercial Locks and Hardware; an ASSA ABLOY Group company.
o. <**Insert manufacturer's name.**>

D. Interconnected Locks: BHMA A156.12[**, Grade 1**] [**, Grade 2**] [**, Grade 1 unless Grade 2 is indicated**]; Series 5000.[**Listed under Category F in BHMA's "Certified Product Directory."**]

1. [**Available**]Manufacturers:

a. Arrow USA; an ASSA ABLOY Group company.
b. Cal-Royal Products, Inc.
c. Falcon Lock; an Ingersoll-Rand Company.
d. Schlage Commercial Lock Division; an Ingersoll-Rand Company.
e. <**Insert manufacturer's name.**>

E. Roller Latches: Rolling plunger that engages socket or catch, with adjustable roller projection, and as follows:

1. Material: [**Brass**] [**Bronze**].
2. Mounting: [**Surface**] [**Mortise**].

F. Push-Pull Latches: Consisting of paddle handles that retract latchbolt; capable of being mounted vertically or horizontally; and as follows:

1. Lever and Escutcheon Material: [**Brass**] [**Bronze**] [**Stainless steel**] [**Aluminum**].
2. Latch Type: [**Bored**] [**Mortise**].
3. Lettering: Engrave with the words "Pull" and "Push."
4. Lead Lining: 0.047 inch (1.2 mm) thick for escutcheon plate.

2.9 AUXILIARY LOCKS AND LATCHES

A. Auxiliary Locks: BHMA A156.5[**, Grade 1**] [**, Grade 2**] [**, Grade 1 unless Grade 2 is indicated**].[**Listed under Category E in BHMA's "Certified Product Directory."**]

1. [**Available**]Manufacturers:

a. ABLOY Security, Inc.; an ASSA ABLOY Group company.
b. Accurate Lock & Hardware Co.
c. Adams Rite Manufacturing Co.
d. Arrow USA; an ASSA ABLOY Group company.
e. Best Access Systems; Div. of The Stanley Works.
f. Cal-Royal Products, Inc.
g. Falcon Lock; an Ingersoll-Rand Company.
h. Marks USA.
i. Medeco Security Locks, Inc.; an ASSA ABLOY Group company.
j. PDQ Manufacturing.

k. SARGENT Manufacturing Company; an ASSA ABLOY Group company.
l. Schlage Commercial Lock Division; an Ingersoll-Rand Company.
m. Weiser Lock; a Masco Company.
n. Yale Commercial Locks and Hardware; an ASSA ABLOY Group company.
o. <**Insert manufacturer's name.**>

2. Bored Auxiliary Locks:

a. Material: [**Aluminum**] [**Brass**] [**Bronze**] [**Stainless steel**] [**Zinc alloy**].
b. Deadlatches: Deadlocking latchbolt operated by [**key either side**] [**key outside and turn inside**] [**turn inside with no cylinder**].
c. Deadlocks: Deadbolt operated by [**key either side**] [**key outside and turn inside**] [**turn inside, no cylinder**] [**key outside, no trim inside**].

3. Mortise Auxiliary Locks:

a. Material: [**Aluminum**] [**Brass**] [**Bronze**] [**Stainless steel**] [**Zinc alloy**].
b. Deadlocks: Deadbolt operated by key [**either side**] [**outside and turn inside**] [**one side**].
c. Deadlatches: Latchbolt and auxiliary deadlatch operated by key [**either side**] [**outside and turn inside**].
d. Deadlocks for Sliding Doors: Expanding- or interlocking-type deadbolt operated by key [**either side**] [**outside and turn inside**] [**one side**].
e. Deadlatches for Sliding Doors: Hook-type latchbolt operated by key [**either side**] [**outside and handle inside**].

4. Narrow Stile Auxiliary Locks:

a. Material: [**Aluminum**] [**Brass**] [**Bronze**] [**Stainless steel**] [**Zinc alloy**].
b. Deadlock: Deadlocking bolt operated as follows:

1) Operation: Key [**both sides**] [**outside and operating trim inside**].
2) Door Application: [**Swinging**] [**Sliding**] door.

c. Deadlatch: Latchbolt with auxiliary deadlatch operated by key outside and paddle or lever inside; for single swinging doors.
d. Multipoint Lock: Deadlocking bolt for pairs of swinging doors; operated as follows:

1) Operation: Key [**both sides**] [**outside and turn, lever, or knob inside**].
2) Type: [**Two**] [**Three**] point.

e. Latch/Lock: Deadbolt and latchbolt; both operated by key both sides; inside handle operates only latchbolt.

5. Rim Auxiliary Locks:

a. Material: [**Aluminum**] [**Brass**] [**Bronze**] [**Stainless steel**] [**Zinc alloy**].
b. Latchbolt: Operated by key outside and turn inside.
c. Deadlocking Latchbolt: Operated by key outside and turn inside.
d. Deadbolt: Operated by key outside and turn inside.

e. Rotary Deadbolt: Operated by key [**either side**] [**outside and turn inside**] [**outside**].
f. Interlocking Deadbolt: Operated by key [**either side**] [**outside and turn inside**] [**outside**].

B. Push-Button Combination Locks: BHMA A156.5[**, Grade 1 for cylindrical locks**] [**, Grade 2 for mortise locks**].

1. [**Available**]Manufacturers:

a. Kaba Ilco Inc.; a Kaba Group company.
b. <**Insert manufacturer's name.**>

2. Lock opens by entering a one- to five-digit code by pushing correct buttons in correct sequence; automatically relocks when door is closed.
3. Lockset Configuration: [**Standard**] [**Privacy with inside push button**].
4. Auxiliary Lock Configuration: [**Deadbolt**] [**Deadlocking latch**] [**Deadlocking rim latch**].
5. Provide key override capability by means of cylinder.

2.10 ELECTROMAGNETIC LOCKS

A. General: BHMA A156.23; electrically powered, of strength and configuration indicated; with electromagnet attached to frame and armature plate attached to door.[**Listed under Category E in BHMA's "Certified Product Directory."**]

1. Type: Full exterior or full interior, as required by application indicated.
2. Strength Ranking: [**1500 lbf (6672 N)**] [**1000 lbf (4448 N)**] [**500 lbf (2224 N)**].
3. Inductive Kickback Peak Voltage: Not more than [**53**] [**0**] V.
4. Residual Magnetism: Not more than [**4 lbf (18 N)**] [**0 lbf (0 N)**] to separate door from magnet.

B. Delayed-Egress Locks: BHMA A156.24.[**Listed under Category G in BHMA's "Certified Product Directory."**]

1. Means of Egress Doors: Lock releases within 15 seconds after applying a force not more than 15 lbf (67 N) for not more than 3 seconds, as required by NFPA 101.
2. Security Grade: Activated from secure side of door by initiating device.
3. Movement Grade: Activated by door movement as initiating device.

C. Configuration: Direct-hold type.

1. Mounting: Lock mounted on bottom of header; strike mounted flush on push side of door.
2. Mounting: Lock mounted on face of header; strike mounted on pull side of door with angle bracket.
3. Mounting: Lock mounted on side of jamb; strike mounted flush on push side of door.

D. Configuration: Shear type.

1. Mounting: Lock mounted on face of header; strike mounted on either side of door with angle bracket.
2. Mounting: Lock mortised in header; strike mortised in top of door.
3. Mounting: Lock mortised in jamb; strike mortised in edge of door.
4. Mounting: Lock mortised in bottom of door; strike mortised in floor.
5. Mounting: Lock mortised in floor; strike mortised in bottom of door.

E. Optional Features:

1. Magnetic bond sensor.
2. Continuous housing for full width of door.
3. Continuous housing for full height of door.
4. Single LED indicators.
5. Double LED indicators.
6. Adjustable time delay with automatic relock.
7. Integral door position switch.

F. [**Available**]Manufacturers:

1. Door Controls International.
2. Doorguard Systems, Inc.
3. Dortronics Systems, Inc.
4. DynaLock Corp.
5. Locknetics; an Ingersoll-Rand Company.
6. Rutherford Controls Int'l. Corp.
7. SARGENT Manufacturing Company; an ASSA ABLOY Group company.
8. Securitron Magnalock Corporation; an ASSA ABLOY Group company.
9. Security Door Controls.
10. <**Insert manufacturer's name.**>

2.11 ELECTROMECHANICAL LOCKS

A. General: Grade [**1**] [**2**] [**1 unless Grade 2 is indicated**] for type of lock indicated; motor or solenoid driven.

B. Type: [**Bored**] [**Mortise latchbolt**] [**Mortise deadbolt**] [**Mortise deadlocking latchbolts**].

C. [**Available**]Manufacturers:

1. ABLOY Security, Inc.; an ASSA ABLOY Group company.
2. Best Access Systems; Div. of The Stanley Works.
3. Brink, R. R. Locking Systems, Inc.
4. DynaLock Corp.
5. Folger Adam Security, Inc.; an ASSA ABLOY Group company.
6. SARGENT Manufacturing Company; an ASSA ABLOY Group company.
7. Schlage Commercial Lock Division; an Ingersoll-Rand Company.
8. Security Door Controls.
9. Yale Commercial Locks and Hardware; an ASSA ABLOY Group company.
10. <**Insert manufacturer's name.**>

2.12 SELF-CONTAINED ELECTRONIC LOCKS

A. General: Internal, battery-powered, self-contained electronic locks; consisting of complete lockset, motor-driven lock mechanism, and actuating device; enclosed in zinc-dichromate-plated, wrought-steel case. Provide key override, low-battery detection and warning, LED status indicators, and ability to program at the lock; type and function indicated.

1. Type: [**Bored**] [**Mortise**].
2. Actuating Device: [**Digital keypad**] [**Magnetic-stripe card reader**].

    a. Card: [**Manufacturer's standard**] [**0.030-inch- (0.76-mm-) thick PVC or polyester**] [**Custom**].

3. Faceplate Material: [**Wrought brass**] [**Wrought bronze**] [**Stainless steel**].
4. Trim: [**Lever**] [**Knob**] [**Match trim specified for mechanical locks**].

B. Accessory: Card encoder and software.

C. Functions: [**Latch with**] [**Deadbolt with**] [**Latch without**] [**Deadbolt without**] key.

D. [**Available**]Manufacturers:

1. Best Access Systems; Div. of The Stanley Works.
2. Cypress Computer Systems, Inc.
3. Kaba Ilco Inc.; a Kaba Group company.
4. Marks USA.
5. SARGENT Manufacturing Company; an ASSA ABLOY Group company.
6. Schlage Commercial Lock Division; an Ingersoll-Rand Company.
7. Security Door Controls.
8. Yale Commercial Locks and Hardware; an ASSA ABLOY Group company.
9. <**Insert manufacturer's name.**>

2.13 EXIT LOCKS AND EXIT ALARMS

A. Exit Locks: BHMA A156.29, Grade 1, surface mounted; battery powered, housed in metal case; with red-and-white lettering reading "EMERGENCY EXIT PUSH TO OPEN--ALARM WILL SOUND."[**Include the following features:**]

1. Low-battery alert.
2. Outside key control.
3. Audible alarm that sounds when unauthorized use of door occurs.
4. Silent alarm with remote signal capability for connection to remote indicating panel.
5. Strike: [**Surface**] [**Mortise**].
6. Single-Door Type: Activated by [**arm, push plate, or paddle**] [**horizontal bar**].
7. Pairs-of-Door Type: Activated by [**arm, push plate, or paddle**] [**horizontal bar**].

B. Stand-Alone Exit Alarms: BHMA A156.29, Grade 1, [**surface mounted on door**] [**mounted separate from door and activated by door movement switch**].[**Include the following features:**]

1. Low-battery alert.
2. Outside key control.
3. Audible alarm that sounds when unauthorized use of door occurs.
4. Automatic rearming after authorized use[**, with adjustable time delay**].
5. Remote signal capability for connection to remote indicating panel.

C. [**Available**]Manufacturers:

1. Arrow USA; an ASSA ABLOY Group company.
2. Detex Corporation.
3. SARGENT Manufacturing Company; an ASSA ABLOY Group company.
4. <**Insert manufacturer's name.**>

2.14 DOOR BOLTS, GENERAL

A. Bolt Throw: Comply with testing requirements for length of bolts required for labeled fire doors, and as follows:

1. Half-Round Surface Bolts: Minimum 7/8-inch (22-mm) throw.
2. Interlocking Surface Bolts: Minimum 15/16-inch (24-mm) throw.
3. Fire-Rated Surface Bolts: Minimum 1-inch (25-mm) throw; listed and labeled for fire-rated doors.
4. Dutch-Door Bolts: Minimum 3/4-inch (19-mm) throw.
5. Mortise Flush Bolts: Minimum 3/4-inch (19-mm) throw.

B. Dustproof Strikes: BHMA A156.16[**, Grade 1**].

C. Surface Bolts: BHMA A156.16[**, Grade 1**] [**, Grade 2**] [**, Grade 1 unless Grade 2 is indicated**].

1. Flush Bolt Heads: Minimum of 1/2-inch- (13-mm-) diameter rods of brass, bronze, or stainless steel with minimum 12-inch- (305-mm-) long rod for doors up to 84 inches (2134 mm) in height. Provide longer rods as necessary for doors exceeding 84 inches (2134 mm).
2. [**Available**]Manufacturers:

a. Burns Manufacturing Incorporated.
b. Don-Jo Mfg., Inc.
c. Door Controls International.
d. Glynn-Johnson; an Ingersoll-Rand Company.
e. Hager Companies.
f. IVES Hardware; an Ingersoll-Rand Company.
g. Stanley Commercial Hardware; Div. of The Stanley Works.
h. Trimco.
i. <**Insert manufacturer's name.**>

D. Manual Flush Bolts: BHMA A156.16[**, Grade 1**] [**, Grade 2**] [**, Grade 1 unless Grade 2 is indicated**]; designed for mortising into door edge.

1. [**Available**]Manufacturers:

a. Adams Rite Manufacturing Co.
b. Burns Manufacturing Incorporated.
c. Don-Jo Mfg., Inc.
d. Door Controls International.
e. Glynn-Johnson; an Ingersoll-Rand Company.
f. Hager Companies.
g. Hiawatha, Inc.
h. IVES Hardware; an Ingersoll-Rand Company.
i. Stanley Commercial Hardware; Div. of The Stanley Works.
j. Trimco.
k. <**Insert manufacturer's name.**>

E. Automatic and Self-Latching Flush Bolts: BHMA A156.3[**, Grade 1**] [**, Grade 2**] [**, Grade 1 unless Grade 2 is indicated**]; designed for mortising into door edge.

1. [**Available**]Manufacturers:

a. Cal-Royal Products, Inc.
b. Door Controls International.
c. Glynn-Johnson; an Ingersoll-Rand Company.
d. Hager Companies.
e. IVES Hardware; an Ingersoll-Rand Company.
f. Trimco.
g. <**Insert manufacturer's name.**>

2.15 DOOR BOLTS

A. Half-Round Surface Bolts: 6-inch (152-mm) polished-brass or burnished-steel, half-round rod and knob; minimum 7/8-inch (22-mm) throw; with universal strike.

B. Interlocking Surface Bolts: 6-inch (152-mm) extruded-brass or aluminum, interlocking track and rod; minimum 15/16-inch (24-mm) throw; with universal or mortise strike.

C. Fire-Rated Surface Bolts: 8-inch (203-mm) steel bolt with 2 steel guides; minimum 1-inch (25-mm) throw; listed and labeled for fire-rated doors; with universal strike.

D. Dutch-Door Surface Bolts: Polished-brass bolt and knob, minimum 3/4-inch (19-mm) throw, with standard strike.

E. Automatic Flush Bolts: Fabricated from steel and brass components, with spring-activated bolts that automatically retract when active leaf is opened and that automatically engage when active door depresses bolt trigger[**; listed and labeled for fire-rated doors**]. Provide brass or stainless-steel cover plate, top and bottom strikes, guides, guide supports, wear plates, and shims.

F. Self-Latching Flush Bolts: Fabricated from steel and brass components, with spring-activated bolts that automatically engage when active door depresses trigger[**; listed and labeled for fire-rated doors**]. Bolts are manually retracted by a slide in the bolt face. Provide brass or stainless-steel cover plate, top and bottom strikes, guides, guide supports, wear plates, and shims.

G. Manual-Extension Flush Bolts: Fabricated from extruded brass or aluminum, with 12-inch (305-mm) rod actuated by flat lever[**; listed and labeled for fire-rated doors**]. Provide matching strike.

H. Slide Flush Bolts: Cast brass, with rod actuated by slide. Provide matching strike.

I. Tubular Bolts: Polished-brass or polished-bronze, oval turn knob and escutcheon; minimum 9/16-inch (14-mm) steel bolt with 1/2-inch (13-mm) throw.

J. Dustproof Strikes:

1. Jamb Type: Polished wrought brass, with 3/4-inch- (19-mm-) diameter, spring-tension plunger.
2. Floor Type: Polished wrought brass, with 3/4-inch- (19-mm-) diameter, spring-tension plunger.
3. Locking Floor Type: Polished wrought brass, with 3/4-inch- (19-mm-) diameter, spring-tension plunger that can be locked in the up position by rotating plunger.

2.16 EXIT DEVICES, GENERAL

A. Exit Devices: BHMA A156.3[**, Grade 1**] [**, Grade 2**] [**, Grade 1 unless Grade 2 is indicated**].[**Listed under Category G in BHMA's "Certified Product Directory."**]

B. Accessibility Requirements: Where handles, pulls, latches, locks, and other operating devices are indicated to comply with accessibility requirements, comply with [**the U.S. Architectural & Transportation Barriers Compliance Board's "Americans with Disabilities Act (ADA), Accessibility Guidelines for Buildings and Facilities (ADAAG)."**] [**ANSI A117.1.**] [**FED-STD-795, "Uniform Federal Accessibility Standards."**] <**Insert local regulation.**>

1. Provide operating devices that do not require tight grasping, pinching, or twisting of the wrist and that operate with a force of not more than 5 lbf (22 N).

C. Exit Devices for Means of Egress Doors: Comply with NFPA 101. Exit devices shall not require more than 15 lbf (67 N) to release the latch. Locks shall not require the use of a key, tool, or special knowledge for operation.

D. Panic Exit Devices: Listed and labeled by a testing and inspecting agency acceptable to authorities having jurisdiction, for panic protection, based on testing according to UL 305.

E. Fire Exit Devices: Devices complying with NFPA 80 that are listed and labeled by a testing and inspecting agency acceptable to authorities having jurisdiction, for fire and panic protection, based on testing according to UL 305 and NFPA 252.

F. Fire-Exit Removable Mullions: Provide removable mullions for use with fire exit devices complying with NFPA 80 that are listed and labeled by a testing and inspecting agency acceptable to authorities having jurisdiction, for fire and panic protection, based on testing according to UL 305 and NFPA 252. Mullions shall be used only with exit devices for which they have been tested.

G. Dummy Push Bar: Nonfunctioning push bar matching functional push bar.

1. Operation: [**Rigid**] [**Movable**] [**Movable with monitor switch**].

H. Outside Trim: [**Lever**] [**Lever with cylinder**] [**Knob**] [**Knob with cylinder**] [**Pull**] [**Pull with cylinder**] [**Thumb turn with cylinder**]; material and finish to match locksets, unless otherwise indicated.

1. Match design for locksets and latchsets, unless otherwise indicated.

I. Through Bolts: For exit devices and trim on [**metal doors**] [**non-fire-rated wood doors**] [**fire-rated wood doors**].

J. [**Available**]Manufacturers:

1. Adams Rite Manufacturing Co.
2. Arrow USA; an ASSA ABLOY Group company.
3. Cal-Royal Products, Inc.
4. Corbin Russwin Architectural Hardware; an ASSA ABLOY Group company.
5. Detex Corporation.
6. Door Controls International.
7. DORMA Architectural Hardware; Member of The DORMA Group North America.
8. Dor-O-Matic; an Ingersoll-Rand Company.
9. Locknetics; an Ingersoll-Rand Company.
10. Monarch Exit Devices & Door Hardware; an Ingersoll-Rand Company.
11. Precision Hardware, Inc.
12. Rutherford Controls Int'l. Corp.
13. SARGENT Manufacturing Company; an ASSA ABLOY Group company.
14. Von Duprin; an Ingersoll-Rand Company.
15. Yale Commercial Locks and Hardware; an ASSA ABLOY Group company.
16. <**Insert manufacturer's name.**>

2.17 EXIT DEVICES

A. Rim Exit Devices:

1. Type: BHMA A156.3, [**Type 1, rim**] [**Type 4, narrow stile**] [**Type 28, incorporating a deadbolt**].
2. Actuating Bar: [**Cross bar**] [**Push pad**] [**Narrow-stile push pad**].
3. Material: [**Brass**] [**Bronze**] [**Stainless steel**] [**Aluminum**] [**Wrought steel**].

B. Mortise Exit Devices:

1. Type: BHMA A156.3, [**Type 3**] [**Type 10, narrow stile**].
2. Actuating Bar: [**Cross bar**] [**Push pad**] [**Narrow-stile push pad**].
3. Material: [**Brass**] [**Bronze**] [**Stainless steel**] [**Aluminum**] [**Wrought steel**].

C. Surface Vertical-Rod Exit Devices:

1. Type: BHMA A156.3, [**Type 2**] [**Type 5, narrow stile**].
2. Actuating Bar: [**Cross bar**] [**Push pad**] [**Narrow-stile push pad**].
3. Material: [**Brass**] [**Bronze**] [**Stainless steel**] [**Aluminum**] [**Wrought steel**].

4. Configuration: [**Top and bottom rods**] [**Top rod**].

D. Concealed Vertical-Rod Exit Devices:

1. Type: BHMA A156.3, [**Type 6, narrow stile**] [**Type 7, for wood doors**] [**Type 8, for metal doors**].
2. Actuating Bar: [**Cross bar**] [**Push pad**] [**Narrow-stile push pad**].
3. Material: [**Brass**] [**Bronze**] [**Stainless steel**] [**Aluminum**] [**Wrought steel**].

E. Combination Exit Devices:

1. Type: BHMA A156.3, [**Type 9, rim and surface vertical rod**] [**Type 11, mortise and surface vertical rod**] [**Type 12, mortise and concealed vertical rod**].
2. Actuating Bar: [**Cross bar**] [**Push pad**] [**Narrow-stile push pad**].
3. Material: [**Brass**] [**Bronze**] [**Stainless steel**] [**Aluminum**] [**Wrought steel**].

F. Automatic Latching Bolts:

1. Type: BHMA A156.3, [**Type 23, concealed**] [**Type 24, surface**].
2. Material: [**Brass**] [**Bronze**] [**Stainless steel**].

G. Extension Flush Bolts:

1. Type: BHMA A156.3, [**Type 25, automatic**] [**Type 27, self-latching**].
2. Material: [**Brass**] [**Bronze**] [**Stainless steel**].

H. Electrified Exit Device Options: Types and functions indicated as follows:

1. Request-for-Exit Function: Signal initiated when push bar is actuated.
2. Delayed Egress: Depressing push bar for more than 3 seconds initiates irreversible alarm and 15-second delay for egress. Fire alarm voids 15-second delay.
3. Electric Latch Retraction: Remote signal activates continuous-duty solenoid that retracts latch.
4. Electric Locking/Unlocking: Remote signal controls locking of outside trim; complying with the following:

    a. Fail-Safe: Locked when energized, unlocked when de-energized and during power failure.
    b. Fail-Secure: Unlocked when energized, locked when de-energized and during power failure.
    c. Hold-Back Mechanism: [**Continuous-duty solenoid**] [**Magnet**].

5. Push-Bar Monitor: Signal initiated to remote alarm when push bar is actuated.
6. Push-Bar Alarm: Signal initiated to audible, battery-powered, internal alarm when push bar is actuated.

I. Electronic Exit Bars: Nonlatching electronic releasing device, activated by an adjustable capacitance sensor, with no moving parts; listed and labeled as panic exit hardware. Fabricate bar from extruded aluminum, and provide door and frame transfer device and 16 feet (4.9 m) of cord to route wiring off the door frame.

J. Extruded-Aluminum Removable Mullions: BHMA A156.3, with malleable-iron top and bottom retainers, and prepared for strikes as follows:

1. Strikes: [**Two standard recessed strikes**] [**Two monitor strikes**] [**One standard and one electric strike**].

K. Tube-Steel Removable Mullions: BHMA A156.3, with malleable-iron top and bottom retainers, and prepared for strikes as follows:

1. Strikes: [**Two standard recessed strikes**] [**Two monitor strikes**] [**One standard and one electric strike**].

2.18 LOCK CYLINDERS

A. Standard Lock Cylinders: BHMA A156.5[**, Grade 1**] [**, Grade 1A**] [**, Grade 2**] [**, Grade 1 unless Grade 1A is indicated**] [**, Grade 1 unless Grade 2 is indicated**].

B. High-Security Lock Cylinders: BHMA A156.30[**, Grade 1**] [**, Grade 2**] [**, Grade 3**]; [**M, mechanical**] [**E, electrical**].

1. Key Control Level: Category [**A**] [**B**] [**C**].
2. Destructive Test Level: Category [**A**] [**B**] [**C**].
3. Surreptitious Entry Resistance Level: Category [**A**] [**B**] [**C**].

C. Cylinders: Manufacturer's standard tumbler type, constructed from brass or bronze, stainless steel, or nickel silver, and complying with the following:

1. Number of Pins: [**Five**] [**Six**] [**Seven**].
2. Mortise Type: Threaded cylinders with rings and straight- or clover-type cam.
3. Rim Type: Cylinders with back plate, flat-type vertical or horizontal tailpiece, and raised trim ring.
4. Bored-Lock Type: Cylinders with tailpieces to suit locks.

    a. High-Security Grade: BHMA A156.5, Grade 1A, listed and labeled as complying with pick- and drill-resistant testing requirements in UL 437 (Suffix A).

D. Permanent Cores: Manufacturer's standard; finish face to match lockset; complying with the following:

1. Interchangeable Cores: Core insert, removable by use of a special key; usable with other manufacturers' cylinders.
2. Removable Cores: Core insert, removable by use of a special key; for use only with core manufacturer's cylinder and door hardware.

E. Construction Keying: Comply with the following:

1. Construction Master Keys: Provide cylinders with feature that permits voiding of construction keys without cylinder removal. Provide 10 construction master keys.
2. Construction Cores: Provide construction cores that are replaceable by permanent cores. Provide 10 construction master keys.

a. Replace construction cores with permanent cores as [**indicated in keying schedule**] [**directed by Owner**].
b. Furnish permanent cores to Owner for installation.

F. Manufacturer: Same manufacturer as for locks and latches.

G. [**Available**]Manufacturers:

1. ABLOY Security, Inc.; an ASSA ABLOY Group company.
2. Arrow USA; an ASSA ABLOY Group company.
3. ASSA, Inc.; an ASSA ABLOY Group company.
4. Best Access Systems; Div. of The Stanley Works.
5. Corbin Russwin Architectural Hardware; an ASSA ABLOY Group company.
6. Falcon Lock; an Ingersoll-Rand Company.
7. Medeco Security Locks, Inc.; an ASSA ABLOY Group company.
8. SARGENT Manufacturing Company; an ASSA ABLOY Group company.
9. Schlage Commercial Lock Division; an Ingersoll-Rand Company.
10. Yale Commercial Locks and Hardware; an ASSA ABLOY Group company.
11. <**Insert manufacturer's name.**>

2.19 KEYING

A. Keying System: Factory registered, complying with guidelines in BHMA A156.28, Appendix A. Incorporate decisions made in keying conference, and as follows:

1. No Master Key System: Cylinders are operated by change keys only.
2. Master Key System: Cylinders are operated by a change key and a master key.
3. Grand Master Key System: Cylinders are operated by a change key, a master key, and a grand master key.
4. Great-Grand Master Key System: Cylinders are operated by a change key, a master key, a grand master key, and a great-grand master key.
5. Existing System: Master key or grand master key locks to Owner's existing system.
6. Existing System: Re-key Owner's existing master key system into new keying system.
7. Keyed Alike: Key all cylinders to same change key.

B. Keys: Nickel silver.

1. Stamping: Permanently inscribe each key with a visual key control number and include the following notation:

a. Notation: [**"DO NOT DUPLICATE."**] [**Information to be furnished by Owner.**]

2. Quantity: In addition to one extra key blank for each lock, provide the following:

a. Cylinder Change Keys: Three.
b. Master Keys: Five.
c. Grand Master Keys: Five.
d. Great-Grand Master Keys: Five.

2.20 KEY CONTROL SYSTEM

A. Key Control Cabinet: BHMA A156.5, Grade [**1**] [**2**]; metal cabinet with baked-enamel finish; containing key-holding hooks, labels, 2 sets of key tags with self-locking key holders, key-gathering envelopes, and temporary and permanent markers; with key capacity of [**150**] <**Insert number**> percent of the number of locks.

1. Multiple-Drawer Cabinet: Cabinet with drawers equipped with key-holding panels and key envelope storage, and progressive-type ball-bearing suspension slides. Include single cylinder lock to lock all drawers.
2. Wall-Mounted Cabinet: Cabinet with hinged-panel door equipped with key-holding panels and pin-tumbler cylinder door lock.
3. Portable Cabinet: Tray for mounting in file cabinet, equipped with key-holding panels, envelopes, and cross-index system.

B. Cross-Index System: [**Multiple**] [**Single**]-index system for recording key information. Include three receipt forms for each key-holding hook. Set up by [**key control manufacturer**] [**Installer**].

1. [**Available**]Manufacturers:

    a. Key Control Systems, Inc.
    b. Lund Equipment Co., Inc.
    c. MMF Industries.
    d. Sunroc Corporation.
    e. <**Insert manufacturer's name.**>

C. Key Control System Software: BHMA A156.5, Grade 1; multiple-index system for recording and reporting key-holder listings, tracking keys and lock and key history, and printing receipts for transactions. Include instruction manual.

1. [**Available**]Manufacturers:

    a. Best Access Systems; Div. of The Stanley Works.
    b. Corbin Russwin Architectural Hardware; an ASSA ABLOY Group company.
    c. <**Insert manufacturer's name.**>

D. Key Lock Boxes: Designed for storage of [**two**] [**10**] <**Insert number**> keys[**, with tamper switches to connect to intrusion detection system**].

1. [**Available**]Manufacturers:

    a. ABLOY Security, Inc.; an ASSA ABLOY Group company.
    b. Knox Company.
    c. Supra Products.
    d. <**Insert manufacturer's name.**>

2.21 ELECTRIC STRIKES

A. Standard: BHMA A156.31[**, Grade 1**] [**, Grade 2**] [**, Grade 1 unless Grade 2 is indicated**].

B. General: Use fail-secure electric strikes with fire-rated devices.

1. Material: [**Steel**] [**Forged stainless steel**] [**Cast stainless steel**].
2. Mounting: [**Mortised**] [**Semirim mounted**] [**Rim mounted**].
3. Monitoring: [**Mechanical latchbolt**] [**Infrared latchbolt**] [**Mechanical strike**] [**Infrared strike**].

C. [**Available**]Manufacturers:

1. Adams Rite Manufacturing Co.
2. Brink, R. R. Locking Systems, Inc.
3. Folger Adam Security, Inc.; an ASSA ABLOY Group company.
4. HES, Inc.; an ASSA ABLOY Group company.
5. Locknetics; an Ingersoll-Rand Company.
6. Precision Hardware, Inc.
7. Rutherford Controls Int'l. Corp.
8. Security Door Controls.
9. Trine Access Technology.
10. Von Duprin; an Ingersoll-Rand Company.
11. <**Insert manufacturer's name.**>

2.22 OPERATING TRIM, GENERAL

A. Standard: BHMA A156.6[**and as illustrated on Drawings**].

B. Materials: Fabricate from [**aluminum**] [**brass**] [**bronze**] [**stainless steel**], unless otherwise indicated.

C. [**Available**]Manufacturers:

1. Burns Manufacturing Incorporated.
2. Don-Jo Mfg., Inc.
3. Forms + Surfaces.
4. Hager Companies.
5. Hiawatha, Inc.
6. IVES Hardware; an Ingersoll-Rand Company.
7. Rockwood Manufacturing Company.
8. Trimco.
9. <**Insert manufacturer's name.**>

2.23 OPERATING TRIM

A. Flat Push Plates: 0.050 inch (1.3 mm) thick, 4 inches wide by 16 inches high (102 mm wide by 406 mm high); with square corners and beveled edges, secured with exposed screws.

B. Cold-Forged Push Plates: 0.050 inch (1.3 mm) thick, 4 inches wide by 16 inches high (102 mm wide by 406 mm high); with square corners and beveled edges, secured with exposed screws.

C. Push-Pull Plates: 1/8 inch (3.2 mm) thick, 4 inches wide by 16 inches high (102 mm wide by 406 mm high); with square corners, beveled edges, and raised integral lip; secured with exposed screws.

D. Straight Door Pulls: 3/4-inch (19-mm) constant-diameter pull, with minimum clearance of 1-1/2 inches (38 mm) from face of door; fastened at 8 inches (203 mm) o.c.

1. Mounting: [**Surface applied with concealed fasteners**] [**Through bolted with oval-head machine screws and countersunk washers**] [**Back to back with threaded sleeves**].

E. Offset Door Pulls: 3/4-inch (19-mm) constant-diameter pull, with minimum clearance of 1-1/2 inches (38 mm) from face of door and offset of 2 inches (51 mm); fastened at 8 inches (203 mm) o.c.

1. Mounting: [**Surface applied with concealed fasteners**] [**Through bolted with oval-head machine screws and countersunk washers**] [**Back to back with threaded sleeves**].

F. Flush Door Pulls: Mortised 1/2 inch (13 mm) deep, fastened by screws, and as follows:

1. Shape: [**Circular**] [**Rectangular with oval recess**] [**Rectangular with rectangular recess**].

G. Pull-Plate Door Pulls: 0.050-inch- (1.3-mm-) thick plate, 4 inches wide by 16 inches high (102 mm wide by 406 mm high), with square corners and beveled edges; 3/4-inch (19-mm) constant-diameter pull, with minimum clearance of 1-1/2 inches (38 mm) from face of door; fastened at 8 inches (203 mm) o.c.

1. Mounting: [**Surface applied with concealed fasteners**] [**Through bolted with oval-head machine screws and countersunk washers**] [**Back to back with threaded sleeves**].

H. Straight Push-Pull Door Pulls: Push-pull plate minimum 5 inches wide by 12 inches high (125 mm wide by 300 mm high), with minimum clearance of 1-1/2 inches (38 mm) from face of door.

I. Offset Push-Pull Door Pulls: Push-pull plate minimum 5 inches wide by 12 inches high (125 mm wide by 300 mm high), with minimum clearance of 1-1/2 inches (38 mm) from face of door, and offset 2 inches (50 mm).

J. Single Push Bar: Horizontal bar, with minimum clearance of 1-1/2 inches (38 mm) from face of door, and as follows:

1. Shape and Size: [**1-inch (25-mm) constant-diameter round bar**] [**Minimum 3/8-by-1-1/4-inch (10-by-32-mm) flat bar**].
2. Mounting: [**Surface applied with concealed fasteners**] [**Through bolted with oval-head machine screws and countersunk washers**].

K. Double Pull Bar: Two horizontal bars connected by matching vertical pull bar and spaced at 8 inches (200 mm) o.c.; with minimum clearance of 1-1/2 inches (38 mm) from face of door, and as follows:

1. Shape and Size: [**1-inch (25-mm) constant-diameter round bars**] [**Minimum 3/8-by-1-1/4-inch (10-by-32-mm) flat bars**].
2. Mounting: [**Surface applied with concealed fasteners**] [**Through bolted with oval-head machine screws and countersunk washers**].

2.24 ACCESSORIES FOR PAIRS OF DOORS

A. Carry-Open Bars: Provide carry-open bars for inactive leaves of pairs of doors unless automatic or self-latching bolts are used.

1. Material: Polished brass or bronze, with strike plate.

B. Flat Overlapping Astragals: Flat metal bar, surface mounted on face of door with screws; minimum 1/8 inch (3.2 mm) thick by 2 inches (50 mm) wide by full height of door; and base metal as follows:

1. Base Metal: [**Primed steel**] [**Zinc-plated steel**] [**Aluminum**] [**Stainless steel**] [**Brass**].

C. Rigid, Housed Astragals: Gasket material held in place by metal housing; fastened to face of door with screws.

1. Gasket Material: [**Closed-cell sponge silicone**] [**Closed-cell sponge neoprene**] [**Neoprene**] [**Silicone bulb**].
2. Housing Material: [**Aluminum**] [**Copper alloy (brass or bronze)**].

D. Overlapping-with-Gasket Astragals: T-shaped metal, surface mounted on edge of door with screws; with integral gasket and base metal as follows:

1. Base Metal: [**Primed steel**] [**Zinc-plated steel**] [**Aluminum**] [**Stainless steel**].
2. Gasket Material: [**Vinyl**] [**Silicone**] [**Sponge neoprene**] [**Brush pile**] [**Polypropylene**].

2.25 CLOSERS, GENERAL

A. Accessibility Requirements: Where handles, pulls, latches, locks, and other operating devices are indicated to comply with accessibility requirements, comply with [**the U.S. Architectural & Transportation Barriers Compliance Board's "Americans with Disabilities Act (ADA), Accessibility Guidelines for Buildings and Facilities (ADAAG)."**] [**ANSI A117.1.**] [**FED-STD-795, "Uniform Federal Accessibility Standards."**] <**Insert local regulation.**>

1. Comply with the following maximum opening-force requirements:

a. Interior, Non-Fire-Rated Hinged Doors: 5 lbf (22.2 N) applied perpendicular to door.
b. Sliding or Folding Doors: 5 lbf (22.2 N) applied parallel to door at latch.
c. Fire Doors: Minimum opening force allowable by authorities having jurisdiction.

B. Door Closers for Means of Egress Doors: Comply with NFPA 101. Door closers shall not require more than 30 lbf (133 N) to set door in motion and not more than 15 lbf (67 N) to open door to minimum required width.

C. Hold-Open Closers/Detectors: Coordinate and interface integral smoke detector and closer device with fire alarm system.

D. Flush Floor Plates: Provide finish cover plates for floor closers unless thresholds are indicated. Match door hardware finish, unless otherwise indicated.

E. Recessed Floor Plates: Provide recessed floor plates with insert of floor finish material for floor closers unless thresholds are indicated. Provide extended closer spindle to accommodate thickness of floor finish.

F. Power-Assist Closers: As specified in Division 8 Section "Automatic Door Operators" for access doors for people with disabilities or where listed in door hardware sets.

G. Size of Units: Unless otherwise indicated, comply with manufacturer's written recommendations for size of door closers depending on size of door, exposure to weather, and anticipated frequency of use. Provide factory-sized closers, adjustable to meet field conditions and requirements for opening force.

H. Surface Closers: BHMA A156.4[**, Grade 1**] [**, Grade 2**] [**, Grade 1 unless Grade 2 is indicated**].[**Listed under Category C in BHMA's "Certified Product Directory."**] Provide type of arm required for closer to be located on non-public side of door, unless otherwise indicated.

1. [**Available**]Manufacturers:

    a. Arrow USA; an ASSA ABLOY Group company.
    b. Corbin Russwin Architectural Hardware; an ASSA ABLOY Group company.
    c. DORMA Architectural Hardware; Member of The DORMA Group North America.
    d. Dor-O-Matic; an Ingersoll-Rand Company.
    e. LCN Closers; an Ingersoll-Rand Company.
    f. Norton Door Controls; an ASSA ABLOY Group company.
    g. Rixson Specialty Door Controls; an ASSA ABLOY Group company.
    h. SARGENT Manufacturing Company; an ASSA ABLOY Group company.
    i. Yale Commercial Locks and Hardware; an ASSA ABLOY Group company.
    j. <**Insert manufacturer's name.**>

I. Concealed Closers: BHMA A156.4[**, Grade 1**] [**, Grade 2**] [**, Grade 1 unless Grade 2 is indicated**].[**Listed under Category C in BHMA's "Certified Product Directory."**]

1. [**Available**]Manufacturers:

    a. DORMA Architectural Hardware; Member of The DORMA Group North America.
    b. LCN Closers; an Ingersoll-Rand Company.
    c. Norton Door Controls; an ASSA ABLOY Group company.
    d. Rixson Specialty Door Controls; an ASSA ABLOY Group company.

e. SARGENT Manufacturing Company; an ASSA ABLOY Group company.
f. <**Insert manufacturer's name.**>

J. Closer Holder Release Devices: BHMA A156.15.[**Listed under Category C in BHMA's "Certified Product Directory."**]

1. Life-Safety Type: On release of hold open, door becomes self-closing. Automatic release is activated by [**smoke detection system**] [**loss of power**].
2. [**Available**]Manufacturers:

a. Corbin Russwin Architectural Hardware; an ASSA ABLOY Group company.
b. DORMA Architectural Hardware; Member of The DORMA Group North America.
c. LCN Closers; an Ingersoll-Rand Company.
d. Norton Door Controls; an ASSA ABLOY Group company.
e. Rixson Specialty Door Controls; an ASSA ABLOY Group company.
f. SARGENT Manufacturing Company; an ASSA ABLOY Group company.
g. <**Insert manufacturer's name.**>

K. Coordinators: BHMA A156.3.

2.26 CLOSERS

A. Traditional Surface Closers: Rack-and-pinion hydraulic type; with adjustable sweep and latch speeds controlled by key-operated valves; with forged-steel main arm; enclosed in a cast-aluminum alloy shell; complying with the following:

1. Mounting: [**Hinge side**] [**Opposite hinge side**] [**Parallel arm**] [**Bracket**].
2. Type: [**Regular arm**] [**Fusible-link holder arm**] [**Two-point hold-open arm**] [**Delayed action closing**].
3. Backcheck: [**Factory preset**] [**Adjustable**], effective between 60 and 85 degrees of door opening.

B. Modern-Type-without-Cover Surface Closers: Rack-and-pinion hydraulic type; with adjustable sweep and latch speeds controlled by key-operated valves; with forged-steel main arm; enclosed in a cast-aluminum alloy shell; complying with the following:

1. Mounting: [**Hinge side**] [**Opposite hinge side**] [**Parallel arm**] [**Bracket**] [**Hinge side top jamb**] [**Opposite side top jamb**].
2. Type: [**Regular arm**] [**Fusible-link holder arm**] [**Slide track arm**] [**Delayed action closing**].
3. Backcheck: [**Factory preset**] [**Adjustable**], effective between 60 and 85 degrees of door opening.
4. Closing Power Adjustment: At least [**50**] [**35**] [**15**] percent more than minimum tested value.

C. Modern-Type-with-Cover Surface Closers: Rack-and-pinion hydraulic type; with adjustable sweep and latch speeds controlled by key-operated valves; with forged-steel main arm; enclosed in cover indicated; complying with the following:

1. Mounting: [**Hinge side**] [**Opposite hinge side**] [**Parallel arm**] [**Bracket**] [**Hinge side, top jamb**] [**Opposite side, top jamb**].
2. Type: [**Regular arm**] [**Fusible-link holder arm**] [**Slide track arm**] [**Delayed action closing**].
3. Backcheck: [**Factory preset**] [**Adjustable**], effective between 60 and 85 degrees of door opening.
4. Cover Material: [**Aluminum**] [**Plated steel**] [**Molded plastic**].
5. Closing Power Adjustment: At least [**50**] [**35**] [**15**] percent more than minimum tested value.

D. Concealed-in-Door-Type Concealed Closers: Rack-and-pinion hydraulic type; with adjustable sweep and latch speeds controlled by key-operated valves; mortised into top rail of minimum 1-3/4-inch- (44-mm-) thick doors and track mortised into head frame; with double lever arm indicated; complying with the following:

1. Type: [**Surface shoe**] [**Mortised soffit plate**].
2. Arm: [**Regular**] [**Hold open**].
3. Closing Power Adjustment: At least [**50**] [**35**] [**15**] percent more than minimum tested value.

E. Overhead Concealed Closers: Rack-and-pinion hydraulic type; with adjustable sweep and latch speeds controlled by key-operated valves; mortised into head frame; with cast-metal body and exposed cover plate; complying with the following:

1. Type: [**Exposed arm with surface shoe, single acting**] [**Concealed arm and track, butt or pivot hung, single acting**] [**Concealed arm and track, center pivoted, single acting**] [**Concealed arm and track, center pivoted, double acting**].
2. Arm: [**Regular**] [**Automatic hold open**] [**Manually selected hold open**] [**Fusible-link holder arm**].
3. Track: [**Regular**] [**Automatic hold open**] [**Manually selected hold open**].
4. Cover Plate Material: [**Aluminum**] [**Plated steel**].
5. Backcheck: [**Factory preset**] [**Adjustable**].
6. Closing Power Adjustment: At least [**50**] [**35**] percent more than minimum tested value.

F. Floor Concealed Closers: Rack-and-pinion hydraulic type; with adjustable sweep and latch speeds controlled by key-operated valves; with cement case and cast-iron closer body case; for single-acting doors; complying with the following:

1. Type: [**Center pivoted**] [**Butt hinge hung or offset pivoted**] [**Offset pivoted**].
2. Fire Rated: Listed for use with labeled fire doors where indicated.
3. Function: [**Regular**] [**Automatic hold open**] [**Manually selected hold open**] [**Delayed action closing**].
4. Backcheck: [**Factory preset**] [**Adjustable**].
5. Closing Power Adjustment: At least [**50**] [**35**] percent more than minimum tested value.
6. Case Depth: [**Regular, 4 inches (100 mm)**] [**Shallow, 2 inches (50 mm)**].
7. Cover Plate Material: [**Aluminum**] [**Plated steel**].

G. Closer Holder Release Devices: Closer connected with separate or integral releasing and fire- or smoke-detecting devices. Door shall become self-closing on interruption of signal to release device. Comply with the following:

1. Type: [**Single-point hold open**] [**Multiple-point hold open**] [**Free-swinging release**].
2. Mounting: [**Surface mounted on face of door**] [**Surface mounted on face of top jamb**] [**Surface mounted on stop**] [**Mortised into top rail of door**] [**Mortised into top jamb**] [**Recessed into floor**].
3. Options: [**Adjustable backcheck**] [**Integral smoke detector**] [**Adjustable spring power**] [**Adjustable hold-open manual release force**].

H. Coordinators: Consisting of active-leaf, hold-open lever and inactive-leaf release trigger; fabricated from steel with nylon-coated strike plates; with built-in, adjustable safety release[**; and with internal override**].

2.27 PROTECTIVE TRIM UNITS, GENERAL

A. Size: 1-1/2 inches (38 mm) less than door width on push side and 1/2 inch (13 mm) less than door width on pull side, by height specified in door hardware sets.

B. Fasteners: Manufacturer's standard machine or self-tapping screws.

C. Metal Protective Trim Units: BHMA A156.6; beveled top and 2 sides; fabricated from [**material indicated in door hardware sets.**] [**the following material:**]

1. Material: 0.050-inch- (1.3-mm-) thick [**aluminum**] [**brass**] [**bronze**] [**stainless steel**].
2. [**Available**]Manufacturers:

    a. American Floor Products Co., Inc.
    b. Baldwin Hardware Corporation.
    c. Burns Manufacturing Incorporated.
    d. Don-Jo Mfg., Inc.
    e. Hager Companies.
    f. Hiawatha, Inc.
    g. IPC Door and Wall Protection Systems, Inc.; Div. of InPro Corporation.
    h. IVES Hardware; an Ingersoll-Rand Company.
    i. Pawling Corporation.
    j. Rockwood Manufacturing Company.
    k. Trimco.
    l. <**Insert manufacturer's name.**>

D. Plastic Protective Trim Units: BHMA A156.6; beveled 4 sides; fabricated from [**material indicated in door hardware sets.**] [**the following material:**]

1. Plastic Laminate: 1/8 inch (3.2 mm) thick; NEMA LD 3, Grade HGS.
2. Rigid Plastic: 0.060-inch- (1.5-mm-) thick, PVC or acrylic-modified vinyl plastic.
3. Acrylic: 1/8 inch (3.2 mm) thick.
4. Color and Texture: [**As indicated by manufacturer's designations**] [**Match Architect's sample**] [**As selected by Architect from manufacturer's full range**].
5. [**Available**]Manufacturers:

    a. American Floor Products Co., Inc.
    b. Balco, Inc.
    c. Burns Manufacturing Incorporated.

d. Construction Specialties, Inc.; a C/S Group Company.
e. Don-Jo Mfg., Inc.
f. Hager Companies.
g. Hiawatha, Inc.
h. IPC Door and Wall Protection Systems, Inc.; Div. of InPro Corporation.
i. IVES Hardware; an Ingersoll-Rand Company.
j. Korogard Wall Protection Systems; Div. of RJF International Corporation.
k. Pawling Corporation.
l. Rockwood Manufacturing Company.
m. Tepromark International, Inc.
n. Trimco.
o. <**Insert manufacturer's name.**>

2.28 PROTECTIVE TRIM UNITS

A. Armor Plates: 36 inches (914 mm) high by door width, with allowance for frame stops.

B. Kick Plates: 12 inches (305 mm) high by door width, with allowance for frame stops.

C. Mop Plates: 6 inches (152 mm) high by 1 inch (25 mm) less than door width.

D. Stretcher Plates: 8 inches (203 mm) high by door width, with allowance for frame stops.

E. Nonmortise Angle Door Edging: Minimum 0.050-inch- (1.3-mm-) thick metal sheet formed into angle shape; with 1-1/4-inch (32-mm) length of leg on face of door; surface mounted on door.

1. Leg Offset: For [**0.050-inch- (1.3-mm-) thick metal**] [**1/8-inch- (3.2-mm-) thick plastic**] plate.
2. Material: [**Aluminum**] [**Brass**] [**Bronze**] [**Stainless steel**].
3. Height: [**48 inches (1220 mm)**] [**42 inches (1067 mm)**].

F. Mortise Angle Door Edging: Minimum 0.050-inch- (1.3-mm-) thick metal sheet formed into angle shape; with 7/8-inch (22-mm) length of leg on face of door; mortised into edge of door.

1. Material: [**Aluminum**] [**Brass**] [**Bronze**] [**Stainless steel**].
2. Height: [**48 inches (1220 mm)**] [**42 inches (1067 mm)**].

G. Nonmortise Cap Door Edging: Minimum 0.050-inch- (1.3-mm-) thick metal sheet formed into "U" shape; with 1-1/4-inch (32-mm) length of leg on faces of door; surface mounted on door.

1. Leg Offset: For [**0.050-inch- (1.3-mm-) thick metal**] [**1/8-inch- (3.2-mm-) thick plastic**] plate.
2. Material: [**Aluminum**] [**Brass**] [**Bronze**] [**Stainless steel**].
3. Height: [**48 inches (1220 mm)**] [**42 inches (1067 mm)**].

H. Mortise Cap Door Edging: Minimum 0.050-inch- (1.3-mm-) thick metal sheet formed into "U" shape; with 7/8-inch (22-mm) length of leg on faces of door; mortised into edge of door.

1. Material: [**Aluminum**] [**Brass**] [**Bronze**] [**Stainless steel**].

2. Height: [**48 inches (1220 mm)**] [**42 inches (1067 mm)**].

2.29 STOPS AND HOLDERS, GENERAL

A. Stops and Bumpers: BHMA A156.16[**, Grade 1**] [**, Grade 2**] [**, Grade 1 unless Grade 2 is indicated**].

1. Provide floor stops for doors unless wall or other type stops are scheduled or indicated. Do not mount floor stops where they will impede traffic. Where floor or wall stops are not appropriate, provide overhead holders.

B. Mechanical Door Holders: BHMA A156.16[**, Grade 1**] [**, Grade 2**] [**, Grade 1 unless Grade 2 is indicated**].

C. Combination Floor and Wall Stops and Holders: BHMA A156.8[**, Grade 1**] [**, Grade 2**] [**, Grade 1 unless Grade 2 is indicated**].

D. Combination Overhead Stops and Holders: BHMA A156.8[**, Grade 1**] [**, Grade 2**] [**, Grade 1 unless Grade 2 is indicated**].

E. Electromagnetic Door Holders: Coordinate with fire detectors and interface with fire alarm system for labeled fire door assemblies.

1. Listed under Category C in BHMA's "Certified Product Directory."

F. Silencers for Wood Door Frames: BHMA A156.16, Grade 1; neoprene or rubber, minimum 5/8 by 3/4 inch (16 by 19 mm); fabricated for drilled-in application to frame.

G. Silencers for Metal Door Frames: BHMA A156.16, Grade 1; neoprene or rubber, minimum diameter 1/2 inch (13 mm); fabricated for drilled-in application to frame.

H. [**Available**]Manufacturers:

1. Architectural Builders Hardware Mfg., Inc.
2. Baldwin Hardware Corporation.
3. Burns Manufacturing Incorporated.
4. Cal-Royal Products, Inc.
5. Don-Jo Mfg., Inc.
6. Door Controls International.
7. DORMA Architectural Hardware; Member of The DORMA Group North America.
8. Dor-O-Matic; an Ingersoll-Rand Company.
9. Glynn-Johnson; an Ingersoll-Rand Company.
10. Hager Companies.
11. HES, Inc.; an ASSA ABLOY Group company.
12. Hiawatha, Inc.
13. IVES Hardware; an Ingersoll-Rand Company.
14. Rixson Specialty Door Controls; an ASSA ABLOY Group company.
15. Rockwood Manufacturing Company.
16. SARGENT Manufacturing Company; an ASSA ABLOY Group company.
17. Stanley Commercial Hardware; Div. of The Stanley Works.

18. Trimco.
19. <**Insert manufacturer's name.**>

2.30 STOPS AND HOLDERS

A. Chain Door Stops: Welded chain, each end attached to compression springs, both covered with protective sleeve; surface-screw application.

B. Rigid Wall Stops: Polished cast brass, bronze, or aluminum; 3-1/2 inches (89 mm) long, with rubber bumper; [**surface-screw**] [**expansion-shield**] application.

C. Wall Bumpers: Polished cast brass or aluminum with rubber bumper; 2-1/2-inch (64-mm) diameter, minimum 3/4-inch (19-mm) projection from wall, with backplate for concealed fastener installation; with [**convex**] [**concave**] bumper configuration.

D. Roller-Type Bumpers: Polished cast brass or bronze; minimum 4-3/8-inch (111-mm) projection from wall; attached by surface screws.

E. Rigid Floor Stops: Polished cast brass, bronze, or aluminum, with rubber bumper; [**surface-screw**] [**expansion-shield**] application.

F. Dome-Type Floor Stops: Polished cast brass, bronze, or aluminum, with rubber bumper; and as follows:

1. Height: Minimum [**1 inch (25 mm) high, for doors without threshold**] [**1-3/8 inches (35 mm) high, for doors with threshold**].
2. Riser: Extruded aluminum for carpet installations.

G. Lever-Type Door Holders: Polished cast brass, bronze, or aluminum; minimum 4-inch- (102-mm-) long arm that swings up and remains in vertical position; with replaceable rubber tip; surface-screw application.

H. Plunger-Type Door Holders: Polished cast brass, bronze, or aluminum; minimum 1-1/8-inch (29-mm) plunger throw; with replaceable rubber tip; surface-screw application.

I. Electromagnetic Door Holders: BHMA A156.15, Grade 1; electromagnet attached to wall or floor as indicated, and strike plate attached to swinging door.

1. Configuration: [**Wall-mounted single**] [**Floor-mounted single**] [**Floor-mounted double**] unit.

J. Combination Floor Stop and Holders: Polished cast brass, bronze, or aluminum; encased spring bumper with metal plunger and stop; and as follows:

1. Operation: [**Semiautomatic hold open**] [**Automatic hold open and release by pushing door**].
2. Application: [**Surface screw**] [**Expansion shield**].

K. Manual Combination Floor Stop and Holders: Polished cast brass, bronze, or aluminum; 3-1/2 inches (89 mm) long, with holder, keeper, and rubber bumper; [**surface-screw**] [**expansion-shield**] application.

L. Combination Wall Stop and Holders: Polished cast brass, bronze, or aluminum; encased spring bumper with metal plunger and stop; surface-screw application; and as follows:

1. Operation: [**Semiautomatic hold open**] [**Automatic hold open and release by pushing door**].

M. Manual Combination Wall Stop and Holders: Polished cast brass, bronze, or aluminum; 3-1/2 inches (89 mm) long, with holder, keeper, and rubber bumper; [**surface-screw**] [**expansion-shield**] application.

2.31 OVERHEAD STOPS AND HOLDERS

A. Overhead Concealed Slide Holders: BHMA A156.8, Type 1; hold open and release by push and pull of door unless control is set in inactive position; with stop and shock absorber; adjustable holding pressure; for [**single**] [**double**]-acting doors opening 110 degrees.

B. Overhead Concealed Slide Stops: BHMA A156.8, Type 1; release by push and pull of door unless control is set in inactive position; with stop and shock absorber; adjustable holding pressure; for [**single**] [**double**]-acting doors opening 110 degrees.

C. Overhead Surface-Mounted Slide Holders: BHMA A156.8, Type 2; hold open and release by push and pull of door unless control is set in inactive position; with stop and shock absorber; adjustable holding pressure; for single-acting doors opening 110 degrees.

D. Overhead Surface-Mounted, Concealed Slide Stops: BHMA A156.8, Type 2; release by push and pull of door unless control is set in inactive position; with stop and shock absorber; adjustable holding pressure; for single-acting doors opening 110 degrees.

E. Overhead Surface-Mounted, Jointed-Arm Holders: BHMA A156.8, Type 3; hold open and release by push and pull of door; control capable of being set in inactive position; with stop and shock absorber; for single-acting doors opening 110 degrees.

F. Overhead Surface-Mounted, Jointed-Arm Stops: BHMA A156.8, Type 3; release by push and pull of door; control capable of being set in inactive position; with stop and shock absorber; for single-acting doors opening 110 degrees.

G. Overhead Concealed, Friction Slide Holders: BHMA A156.8, Type 4; consisting of frictional element held under adjustable pressure; with free-acting shoulder pivots and shock absorber; for [**single**] [**double**]-acting doors opening 110 degrees.

H. Overhead Concealed, Nonfriction Slide Stops: BHMA A156.8, Type 4; consisting of nonfrictional element held under adjustable pressure; with shock absorber; for [**single**] [**double**]-acting doors opening 110 degrees.

I. Overhead Concealed, Nonfriction Slide Holders: BHMA A156.8, Type 4; consisting of nonfrictional element held under adjustable pressure; with automatic hold-open and shock absorber; for [**single**] [**double**]-acting doors opening 110 degrees.

J. Overhead Surface-Mounted, Friction Slide Holders: BHMA A156.8, Type 5; consisting of frictional element held under adjustable pressure; with free-acting shoulder pivots and shock absorber; for single-acting doors opening 110 degrees.

K. Overhead Surface-Mounted, Nonfriction Slide Stops: BHMA A156.8, Type 5; consisting of nonfrictional element held under adjustable pressure; with shock absorber; for single-acting doors opening 110 degrees.

L. Overhead Surface-Mounted, Nonfriction Slide Holders: BHMA A156.8, Type 5; consisting of nonfrictional element held under adjustable pressure; with automatic hold-open and shock absorber; for single-acting doors opening 110 degrees.

M. Overhead Surface-Mounted Rod Holders: BHMA A156.8, Type 8; hold open and release by push and pull of door unless roller cam is set in inactive position; with stop and shock absorber; adjustable spring tension; for single-acting doors opening 110 degrees.

N. Overhead Surface-Mounted Rod Stops: BHMA A156.8, Type 8; release by push and pull of door unless roller cam is set in inactive position; with stop and shock absorber; adjustable spring tension; for single-acting doors opening 110 degrees.

O. Overhead Surface-Mounted Cantilever Holders: BHMA A156.8, Type 9; hold open and release by push and pull of door or thumb turn; with stop and shock absorber; for single-acting doors opening 110 degrees.

P. Overhead Surface-Mounted Cantilever Stops: BHMA A156.8, Type 9; release by push and pull of door or thumb turn; with stop and shock absorber; for single-acting doors opening 110 degrees.

2.32 DOOR GASKETING, GENERAL

A. Standard: BHMA A156.22.[**Listed under Category J in BHMA's "Certified Product Directory."**]

B. General: Provide continuous weather-strip gasketing on exterior doors and provide smoke, light, or sound gasketing on interior doors where indicated or scheduled. Provide noncorrosive fasteners for exterior applications and elsewhere as indicated.

1. Perimeter Gasketing: Apply to head and jamb, forming seal between door and frame.
2. Meeting Stile Gasketing: Fasten to meeting stiles, forming seal when doors are closed.
3. Door Bottoms: Apply to bottom of door, forming seal with threshold when door is closed.

C. Air Leakage: Not to exceed 0.50 cfm per foot (0.000774 cu. m/s per m) of crack length for gasketing other than for smoke control, as tested according to ASTM E 283.

D. Smoke-Labeled Gasketing: Assemblies complying with NFPA 105 that are listed and labeled by a testing and inspecting agency acceptable to authorities having jurisdiction, for smoke-control ratings indicated, based on testing according to UL 1784.

1. Provide smoke-labeled gasketing on 20-minute-rated doors and on smoke-labeled doors.

E. Fire-Labeled Gasketing: Assemblies complying with NFPA 80 that are listed and labeled by a testing and inspecting agency acceptable to authorities having jurisdiction, for fire ratings indicated, based on testing according to [**NFPA 252**] [**UBC Standard 7-2**].

1. Test Pressure: [**Test at atmospheric pressure**] [**After 5 minutes into the test, neutral pressure level in furnace shall be established at 40 inches (1016 mm) or less above the sill**].

F. Sound-Rated Gasketing: Assemblies that are listed and labeled by a testing and inspecting agency, for sound ratings indicated, based on testing according to ASTM E 1408.

G. Replaceable Seal Strips: Provide only those units where resilient or flexible seal strips are easily replaceable and readily available from stocks maintained by manufacturer.

H. Gasketing Materials: ASTM D 2000 and AAMA 701/702.

I. [**Available**]Manufacturers:

1. Hager Companies.
2. M-D Building Products, Inc.
3. National Guard Products.
4. Pemko Manufacturing Co.
5. Reese Enterprises.
6. Sealeze; a Unit of Jason Incorporated.
7. Zero International.
8. <**Insert manufacturer's name.**>

2.33 DOOR GASKETING

A. Adhesive-Backed Perimeter Gasketing: Gasket material applied to frame rabbet with self-adhesive.

1. Gasket Material: [**Vinyl bulb**] [**Sponge silicone**] [**Silicone**] [**Neoprene bulb**] [**Sponge neoprene**].

B. Spring-Metal Perimeter Gasketing: Metal gasket material fastened to frame rabbet with nails or screws.

1. Gasket Material: Minimum [**0.008-inch- (0.20-mm-) thick brass or bronze**] [**0.008-inch- (0.20-mm-) thick stainless steel**] [**0.012-inch- (0.30-mm-) thick aluminum**].

C. Rigid, Housed, Perimeter Gasketing: Gasket material held in place by metal housing; fastened to frame stop with screws.

1. Gasket Material: [**Sponge silicone**] [**Sponge neoprene**] [**Silicone bulb**] [**Polyurethane bulb**] [**Vinyl bulb**] [**Vinyl brush**] [**Nylon brush**] [**Thermoplastic elastomer**].
2. Housing Material: [**Aluminum**] [**Brass or bronze**] [**Stainless steel**].

D. Adjustable, Housed, Perimeter Gasketing: Screw-adjustable gasket material held in place by metal housing; fastened to frame stop with screws.

1. Gasket Material: [**Sponge silicone**] [**Sponge neoprene**] [**Silicone bulb**] [**Polyurethane bulb**] [**Vinyl bulb**] [**Vinyl brush**] [**Nylon brush**] [**Thermoplastic elastomer**].
2. Housing Material: [**Aluminum**] [**Brass or bronze**] [**Stainless steel**].

E. Interlocking Perimeter Gasketing: Metal gasket material consisting of two pieces, one fastened to door and one fastened to frame, that interlock when door is closed; mounted with screws.

1. Gasket Material: Minimum [**0.018-inch- (0.46-mm-) thick zinc**] [**0.015-inch- (0.38-mm-) thick bronze**].

F. Overlapping Astragals for Meeting Stiles: Gasket material held in place by metal housing and overlapping when doors are closed; mounted to face of meeting stile with screws.

1. Gasket Material: [**EPDM strip**] [**Vinyl strip**] [**Nylon brush**].
2. Housing Material: [**Aluminum**] [**Bronze**].
3. Mounting: Surface mounted to [**each**] [**one**] door.

G. Meeting Astragals for Meeting Stiles: Gasket material held in place by metal housing; mounted with screws.

1. Gasket Material: [**Silicone bulb**] [**Neoprene bulb**] [**Vinyl bulb**] [**Nylon brush**] [**Brush pile**] [**Thermoplastic elastomer**].
2. Housing Material: [**Aluminum**] [**Bronze**].
3. Mounting: [**Surface mounted on face of each door**] [**Surface mounted on face of one door**] [**Semimortised into edge of each door**] [**Semimortised into edge of one door**] [**Mortised into edge of each door**] [**Mortised into edge of one door**].

H. Adjustable Astragals for Meeting Stiles: Screw-adjustable gasket material held in place by metal housing; mounted with screws.

1. Gasket Material: [**Silicone**] [**Neoprene**] [**Vinyl**] [**Vinyl-covered magnet**] [**Brush pile**] [**Thermoplastic elastomer**].
2. Housing Material: [**Aluminum**] [**Bronze**].
3. Mounting: [**Surface mounted on face**] [**Semimortised into edge**] [**Mortised into edge**] of each door.

I. Door Sweeps: Gasket material held in place by flat metal housing or flange; surface mounted to face of door with screws.

1. Gasket Material: [**Neoprene**] [**Vinyl**] [**Nylon brush**] [**Polyurethane**] [**Silicone**].
2. Housing Material: [**Aluminum**] [**Bronze**].

J. Door Shoes: Gasket material held in place by metal housing; mounted to bottom edge of door with screws.

1. Gasket Material: [**Vinyl**] [**Thermoplastic elastomer**] [**Neoprene**] [**Brush pile**].
2. Housing Material: [**Aluminum**] [**Bronze**].
3. Extended Housing: [**One side**] [**Both sides**] of door.
4. Mounting: [**Surface mounted on**] [**Mortised into**] bottom edge of door.

K. Automatic Door Bottoms: Gasket material held in place by metal housing that automatically drops to form seal when door is closed; mounted to bottom edge of door with screws.

1. Gasket Material: [**Sponge neoprene**] [**Sponge silicone**] [**Thermoplastic elastomer**] [**Nylon brush**].
2. Housing Material: [**Aluminum**] [**Bronze**] [**Aluminum with 0.047-inch (1.2-mm) lead lining**].
3. Mounting: [**Surface mounted on face**] [**Semimortised into bottom**] [**Mortised into bottom**] of door.
4. Type: Low-closing-force type for doors required to meet accessibility requirements.

2.34 THRESHOLDS, GENERAL

A. Standard: BHMA A156.21.[**Listed under Category J in BHMA's "Certified Product Directory."**]

B. Accessibility Requirements: Where thresholds are indicated to comply with accessibility requirements, comply with [**the U.S. Architectural & Transportation Barriers Compliance Board's "Americans with Disabilities Act (ADA), Accessibility Guidelines for Buildings and Facilities (ADAAG)."**] [**ANSI A117.1.**] [**FED-STD-795, "Uniform Federal Accessibility Standards."**] <**Insert local regulation.**>

1. Bevel raised thresholds with a slope of not more than 1:2. Provide thresholds not more than [**1/2 inch (13 mm) high**] [**3/4 inch (19 mm) high for exterior sliding doors**].

C. Thresholds for Means of Egress Doors: Comply with NFPA 101. Maximum 1/2 inch (13 mm) high.

D. [**Available**]Manufacturers:

1. Hager Companies.
2. M-D Building Products, Inc.
3. National Guard Products.
4. Pemko Manufacturing Co.
5. Reese Enterprises.
6. Rixson Specialty Door Controls; an ASSA ABLOY Group company.
7. Sealeze; a Unit of Jason Incorporated.
8. Zero International.
9. <**Insert manufacturer's name.**>

2.35 THRESHOLDS

A. Compressing-Top Thresholds: Metal member with compressible vinyl seal on top of threshold that seals against bottom of door; and base metal of [**aluminum**] [**extruded bronze**] [**stainless steel**].

B. Saddle Thresholds: Type and base metal as follows:

1. Type: [**Smooth top**] [**Fluted top**] [**Fluted top and offset**] [**Thermal break and fluted top**] [**Applied gasketed stop and fluted top**] [**Carpet separator with fluted top**].
2. Base Metal: [**Aluminum**] [**Extruded bronze**] [**Stainless steel**].

C. Half-Saddle Thresholds: Fluted-top metal member; and base metal of [**aluminum**] [**extruded bronze**].

D. Interlocking Thresholds: Fluted-top metal member with integral lip designed to engage a hook strip applied to door; type and base metal as follows:

1. Type: [**Single lip**] [**Double lip**] [**Double-lip water return**] [**Double-lip water return with aluminum pan**] [**Single lip with thermal barrier**].
2. Base Metal: [**Aluminum**] [**Extruded bronze**].

E. Latching/Rabbeted Thresholds: Type and base metal as follows:

1. Type: [**Fluted**] [**Smooth**] [**Offset with fluted**] top.
2. Base Metal: [**Aluminum**] [**Extruded bronze**].

F. Latching/Rabbeted Thresholds with Gasket: Fluted-top metal member with gasket; type and base metal as follows:

1. Type: [**Offset**] [**Thermal barrier**].
2. Base Metal: [**Aluminum**] [**Extruded bronze**].
3. Gasket Material: [**Vinyl**] [**Silicone**] [**Neoprene**] [**Brush pile**] [**Closed-cell sponge neoprene**].

G. Plate Thresholds: Solid metal plate; and base metal as follows:

1. Top Surface: [**Fluted**] [**Fluted with slip-resistant abrasive**].
2. Base Metal: [**Aluminum**] [**Extruded brass or bronze**] [**Stainless steel**].

H. Ramped Thresholds: Modular, interlocking, sloped, fluted-top metal assemblies with closed return ends; 1:12 slope; and base metal as follows:

1. Top Surface: [**Fluted**] [**Fluted with slip-resistant abrasive**].
2. Base Metal: [**Aluminum**] [**Extruded bronze**].

I. Saddle Thresholds for Floor Closers: Fluted top; type and base metal as follows:

1. Type: [**Type A, for center-hung doors; ends not mitered**] [**Type B, for offset-hung doors; ends not mitered**] [**Type C, for center-hung doors; ends mitered**] [**Type D, for offset-hung doors; ends mitered**].
2. Base Metal: [**Aluminum**] [**Extruded bronze**].

2.36 SLIDING DOOR HARDWARE, GENERAL

A. General: BHMA A156.14; consisting of complete sets including rails, hangers, supports, bumpers, floor guides, and accessories indicated.

1. Exterior Door Hardware: Galvanized steel or anodized aluminum.

B. Horizontal Sliding Door Hardware: Grade 1; rated for minimum door weight of [**240 lb (109 kg)**] [**320 lb (145 kg)**] [**450 lb (205 kg)**] [**560 lb (254 kg)**] [**640 lb (290 kg)**] [**800 lb (363 kg)**] [**1000 lb (455 kg)**] [**1500 lb (681 kg)**].

C. Bypassing Sliding Door Hardware: Rated for doors weighing up to [**200 lb (91 kg)**] [**125 lb (57 kg)**] [**75 lb (34 kg)**].

D. Pocket Sliding Door Hardware: Rated for doors weighing up to [**200 lb (91 kg)**] [**125 lb (57 kg)**] [**75 lb (34 kg)**].

E. [**Available**]Manufacturers:

1. Cox, Arthur & Sons, Inc.
2. Hager Companies.
3. Henderson, P. C. Inc.; Div. of Hepworth PLC.
4. Johnson, L. E. Products, Inc.
5. Lawrence Brothers, Inc.
6. Stanley Commercial Hardware; Div. of The Stanley Works.
7. <**Insert manufacturer's name.**>

2.37 SLIDING DOOR HARDWARE

A. Horizontal Sliding Door Hardware: Wrought steel, unless otherwise indicated.

1. Box Rail: [**Without mounting brackets**] [**With attached mounting brackets**] [**With attached flashing**].
2. Round Rail: [**Without**] [**With attached**] mounting brackets.
3. Rail Supports:

    a. Single Side-Wall Style: [**Intermediate**] [**End**] [**Splice**] type.
    b. Double Side-Wall Style: [**Intermediate**] [**End**] [**Splice**] type.
    c. Triple Side-Wall Style: [**Intermediate**] [**End**] [**Splice**] type.
    d. Single Overhead Style: [**Intermediate**] [**End**] [**Splice**] type.
    e. Single Overhead Parallel Style: [**Intermediate**] [**Splice**] type.
    f. Single Overhead Cross-Ear Style: [**Intermediate**] [**Splice**] type.
    g. Double Overhead Cross-Ear Style: [**Intermediate**] [**Splice**] type.
    h. Triple Overhead Cross-Ear Style: [**Intermediate**] [**Splice**] type.

4. Hanger Configuration: Four-wheel [**truck**] [**hanger assembly with top mounting plate**] [**hanger assembly with drop bolt**] [**hanger assembly with single drop strap**] [**hanger assembly with double drop strap**].

    a. Wheel Assembly: Steel wheels with ball bearings.

5. Accessories:

    a. Continuous bottom guide.
    b. Guide rail.
    c. Bow Handle: Minimum 6 inches (150 mm) in overall length.

d. Flush Pull: Minimum 4 by 5-1/2 by 3/4 inch (100 by 140 by 19 mm), mortised into door.
e. Cane Bolt: Minimum 1/2-inch (13-mm) diameter by 12 inches (305 mm) long.
f. Stay Roller: Minimum 2-inch- (50-mm-) diameter wheel.
g. Floor Center Stop: Cast iron.
h. End guide and stop.
i. Parallel door floor guides.
j. Door stop.
k. Sliding door latch.
l. Bumper Shoe: Minimum 0.0598-inch (1.5-mm) thickness.
m. Cremone Bolt: With lever handle, minimum 1/2-inch- (13-mm-) diameter oval or round rod, and rod guides at 24 inches (610 mm) o.c.
n. Top Spring Bolt: Malleable iron; with angle or surface strike and 24-inch (610-mm) chain.
o. Foot Bolt: Wrought steel, cast iron, or malleable iron; minimum [**6 inches (150 mm)**] [**8 inches (200 mm)**].

B. Bypassing Sliding Door Hardware: Rails and door hardware that allow vertical adjustment.

1. Rail Material: [**Galvanized wrought steel**] [**Extruded aluminum**].
2. Rail Configuration: [**V-grooved double leg**] [**V-grooved double leg with fascia**] [**I-beam**].
3. Mounting: [**Top hung**] [**Bottom supporting with overhead guide**].
4. Wheel Assembly: Two wheel or four wheel, with [**ball**] [**roller**] bearings.
5. Wheel Material: [**Steel**] [**Nylon**].
6. Accessories:

a. Bumper Stops: Wrought steel.
b. Pulls: [**Flush, mortised into door**] [**Cast, forged, or extruded brass or bronze surface-applied type**] [**Wrought brass or bronze edge type, mortised into edge of door**] [**Sliding door latch**] [**Sliding door lock with emergency release**].

C. Pocket Sliding Door Hardware: Overhead box rails and door hardware that allows vertical adjustment.

1. Rail Material: [**Galvanized wrought steel**] [**Extruded aluminum**].
2. Door Type: [**Single**] [**Biparting**].
3. Rail Configuration: [**V-grooved double leg**] [**I-beam**].
4. Wheel Assembly: Two wheel or four wheel, with [**ball**] [**roller**] bearings.
5. Wheel Material: [**Steel**] [**Nylon**].
6. Accessories:

a. Bumper Stops: Wrought steel.
b. Pulls: [**Flush, mortised into door**] [**Cast, forged, or extruded brass or bronze surface-applied type**] [**Wrought brass or bronze edge type, mortised into edge of door**] [**Sliding door latch**] [**Sliding door lock with emergency release**].

2.38 FOLDING DOOR HARDWARE, GENERAL

A. General: BHMA A156.14; consisting of complete sets including overhead rails, hangers, supports, bumpers, floor guides, and accessories indicated.

1. Interior Doors: Provide door hardware for interior bifolding doors when not furnished as part of door package.

B. Bifolding Door Hardware: Rated for door panels weighing up to [**125 lb (57 kg)**] [**50 lb (23 kg)**].

C. Multiple Folding Door Hardware: Rated for door panels weighing up to [**75 lb (34 kg)**] [**30 lb (14 kg)**].

D. [**Available**]Manufacturers:

1. Cox, Arthur & Sons, Inc.
2. Hager Companies.
3. Henderson, P. C. Inc.; Div. of Hepworth PLC.
4. Johnson, L. E. Products, Inc.
5. Lawrence Brothers, Inc.
6. Stanley Commercial Hardware; Div. of The Stanley Works.
7. <**Insert manufacturer's name.**>

2.39 FOLDING DOOR HARDWARE

A. Bifolding Door Hardware: Rails and door hardware that allow horizontal and vertical adjustment.

1. Rail Material: [**Galvanized wrought steel**] [**Extruded aluminum**].
2. Rail Configuration: [**V-grooved double leg**] [**V-grooved double leg with fascia**] [**I-beam**].
3. Mounting: [**Surface mounted overhead**] [**Top and bottom hung**].
4. Wheel Assembly: Two wheel or four wheel, with [**ball**] [**roller**] bearings.
5. Wheel Material: [**Steel**] [**Nylon**].

B. Multiple Folding Door Hardware: Rails and door hardware that allows horizontal and vertical adjustment.

1. Rail Material: [**Galvanized wrought steel**] [**Extruded aluminum**].
2. Rail Configuration: [**V-grooved double leg**] [**V-grooved double leg with fascia**] [**I-beam**].
3. Mounting: [**Surface mounted overhead**] [**Top and bottom hung**].
4. Wheel Assembly: Two wheel or four wheel, with [**ball**] [**roller**] bearing.
5. Wheel Material: [**Steel**] [**Nylon**].

2.40 MISCELLANEOUS DOOR HARDWARE, GENERAL

A. Boxed Power Supplies: Modular unit in NEMA ICS 6, Type 4 enclosure; filtered and regulated; voltage rating and type matching requirements of door hardware served; and listed and labeled for use with fire alarm systems.

B. Monitor Strikes: [**Cast strike with toggle**] [**Dustbox monitor for installation under standard strike**].

C. Auxiliary Hardware: BHMA A156.16[**, Grade 1**] [**, Grade 2**] [**, Grade 1 unless Grade 2 is indicated**] [**, Grade 3**].

1. [**Available**]Manufacturers:

a. Baldwin Hardware Corporation.
b. Cal-Royal Products, Inc.
c. Don-Jo Mfg., Inc.
d. Hager Companies.
e. Lawrence Brothers, Inc.
f. Rockwood Manufacturing Company.
g. Stanley Commercial Hardware; Div. of The Stanley Works.
h. Trimco.
i. <**Insert manufacturer's name.**>

2.41 MISCELLANEOUS DOOR HARDWARE

A. Cardholders: Cast rectangular holder, surface mounted, size as indicated:

1. Card Size: [**2 by 3-1/2 inches (51 by 89 mm)**] [**3-1/2 by 5 inches (89 by 127 mm)**] [**5 by 8 inches (127 by 203 mm)**].
2. Material: [**Brass**] [**Bronze**] [**Stainless steel**].

B. Chain Door Guards: Polished cast brass or bronze or extruded brass; consisting of plate slotted to receive 6-inch- (150-mm-) long welded chain secured to an anchor plate. Guard shall allow door to be opened 3 inches (75 mm) with chain engaged in slotted plate. Equip with chain holder.

C. Coat Hooks: Two curved hooks with rounded ends; 3-inch (76-mm) projection from wall; surface-screw applied; fabricated from [**polished cast brass**] [**polished cast bronze**] [**burnished cast aluminum**].

D. Rod-Type Door Guards: Straight door-mounted rod that engages U-shaped, jamb-mounted rod. U-shaped rod can swing 180 degrees away from door; guard allows door to be slightly opened when engaged. Fabricated from polished cast [**brass**] [**bronze**] [**aluminum**].

E. Door Knockers: BHMA A156.16, Grade 1; solid brass[**, with engraved number and nameplates**].

F. Door Position Switches: Magnetically operated reed switch designed for concealed mounting.

G. Garment Hooks: One long hat hook and one small coat hook; 3-3/4-inch (95-mm) projection from wall with 7-inch (178-mm) overall height; surface-screw applied; fabricated from [**polished cast brass**] [**burnished cast aluminum**].

H. House Numbers: BHMA A156.16, Grade 1; wrought, cast, or forged brass; 4 inches (102 mm) high; secured with brass screws.

I. Letter Box Plates: Spring-loaded front plate with brass spring; inside covered gravity flap or hood; fabricated from [**wrought brass**] [**wrought bronze**] [**aluminum**]; of the following type:

1. Regular Size, Inswinging: Minimum 0.036-inch (0.9-mm) metal thickness, with minimum 7-by-1-5/8-inch (178-by-41-mm) opening.
2. Regular Size, Outswinging: Minimum 0.036-inch (0.9-mm) metal thickness, with minimum 7-by-1-1/2-inch (178-by-38-mm) opening.
3. Magazine Size, Outswinging: Minimum 0.051-inch (1.3-mm) metal thickness, with minimum 11-by-1-7/8-inch (279-by-48-mm) opening.

J. Door and Frame Transfer Devices: Steel housing for mortise in hinge stile of door, with flexible tube for wiring bundle; accommodating doors that swing open to 120 degrees.

K. Wide-Angle Door Viewers: Solid brass, with optical glass lenses; adjustable to door thickness, and permitting 1-way observation with minimum 190-degree viewing angle.

L. Fire-Rated Door Viewers: Solid brass, with optical glass lenses; listed and labeled; adjustable to door thickness, and permitting 1-way observation with minimum [**120**] [**150**] [**190**]-degree viewing angle.

2.42 FABRICATION

A. Manufacturer's Nameplate: Do not provide products that have manufacturer's name or trade name displayed in a visible location except in conjunction with required fire-rated labels and as otherwise approved by Architect.

1. Manufacturer's identification is permitted on rim of lock cylinders only.

B. Base Metals: Produce door hardware units of base metal, fabricated by forming method indicated, using manufacturer's standard metal alloy, composition, temper, and hardness. Furnish metals of a quality equal to or greater than that of specified door hardware units and BHMA A156.18. Do not furnish manufacturer's standard materials or forming methods if different from specified standard.

C. Fasteners: Provide door hardware manufactured to comply with published templates generally prepared for machine, wood, and sheet metal screws. Provide screws according to commercially recognized industry standards for application intended, except aluminum fasteners are not permitted. Provide Phillips flat-head screws with finished heads to match surface of door hardware, unless otherwise indicated.

1. Concealed Fasteners: For door hardware units that are exposed when door is closed, except for units already specified with concealed fasteners. Do not use through bolts for installation where bolt head or nut on opposite face is exposed unless it is the only means

of securely attaching the door hardware. Where through bolts are used on hollow door and frame construction, provide sleeves for each through bolt.

2. Steel Machine or Wood Screws: For the following fire-rated applications:

   a. Mortise hinges to doors.
   b. Strike plates to frames.
   c. Closers to doors and frames.

3. Steel Through Bolts: For the following fire-rated applications unless door blocking is provided:

   a. Surface hinges to doors.
   b. Closers to doors and frames.
   c. Surface-mounted exit devices.

4. Spacers or Sex Bolts: For through bolting of hollow-metal doors.
5. Fasteners for Wood Doors: Comply with requirements in DHI WDHS.2, "Recommended Fasteners for Wood Doors."

2.43 FINISHES

A. Standard: BHMA A156.18, as indicated in door hardware sets.

B. Protect mechanical finishes on exposed surfaces from damage by applying a strippable, temporary protective covering before shipping.

C. Appearance of Finished Work: Variations in appearance of abutting or adjacent pieces are acceptable if they are within one-half of the range of approved Samples. Noticeable variations in the same piece are not acceptable. Variations in appearance of other components are acceptable if they are within the range of approved Samples and are assembled or installed to minimize contrast.

PART 3 - EXECUTION

3.1 EXAMINATION

A. Examine doors and frames, with Installer present, for compliance with requirements for installation tolerances, labeled fire door assembly construction, wall and floor construction, and other conditions affecting performance.

B. Examine roughing-in for electrical power systems to verify actual locations of wiring connections before electrified door hardware installation.

C. Proceed with installation only after unsatisfactory conditions have been corrected.

3.2 PREPARATION

A. Steel Doors and Frames: Comply with DHI A115 Series.

1. Surface-Applied Door Hardware: Drill and tap doors and frames according to ANSI A250.6.

B. Wood Doors: Comply with DHI A115-W Series.

3.3 INSTALLATION

A. Mounting Heights: Mount door hardware units at heights indicated [**on Drawings**] [**as follows**] unless otherwise indicated or required to comply with governing regulations.

1. Standard Steel Doors and Frames: DHI's "Recommended Locations for Architectural Hardware for Standard Steel Doors and Frames."
2. Custom Steel Doors and Frames: DHI's "Recommended Locations for Builders' Hardware for Custom Steel Doors and Frames."
3. Wood Doors: DHI WDHS.3, "Recommended Locations for Architectural Hardware for Wood Flush Doors."

B. Install each door hardware item to comply with manufacturer's written instructions. Where cutting and fitting are required to install door hardware onto or into surfaces that are later to be painted or finished in another way, coordinate removal, storage, and reinstallation of surface protective trim units with finishing work specified in Division 9 Sections. Do not install surface-mounted items until finishes have been completed on substrates involved.

1. Set units level, plumb, and true to line and location. Adjust and reinforce attachment substrates as necessary for proper installation and operation.
2. Drill and countersink units that are not factory prepared for anchorage fasteners. Space fasteners and anchors according to industry standards.

C. Key Control System: Tag keys and place them on markers and hooks in key control system cabinet, as determined by final keying schedule.

D. Boxed Power Supplies: Locate power supplies as indicated or, if not indicated, [**above accessible ceilings**] [**in equipment room**]. Verify location with Architect.

1. Configuration: Provide one power supply for each door opening.
2. Configuration: Provide the least number of power supplies required to adequately serve doors with electrified door hardware.

E. Thresholds: Set thresholds for exterior and acoustical doors in full bed of sealant complying with requirements specified in Division 7 Section "Joint Sealants."

3.4 FIELD QUALITY CONTROL

A. Independent Architectural Hardware Consultant: Owner will engage a qualified independent Architectural Hardware Consultant to perform inspections and to prepare inspection reports.

1. Independent Architectural Hardware Consultant will inspect door hardware and state in each report whether installed work complies with or deviates from requirements, including whether door hardware is properly installed and adjusted.

3.5 ADJUSTING

A. Initial Adjustment: Adjust and check each operating item of door hardware and each door to ensure proper operation or function of every unit. Replace units that cannot be adjusted to operate as intended. Adjust door control devices to compensate for final operation of heating and ventilating equipment and to comply with referenced accessibility requirements.

1. Spring Hinges: Adjust to achieve positive latching when door is allowed to close freely from an open position of 30 degrees.
2. Electric Strikes: Adjust horizontal and vertical alignment of keeper to properly engage lock bolt.
3. Door Closers: Unless otherwise required by authorities having jurisdiction, adjust sweep period so that, from an open position of 70 degrees, the door will take at least 3 seconds to move to a point 3 inches (75 mm) from the latch, measured to the leading edge of the door.

B. Occupancy Adjustment: Approximately [**three**] [**six**] <**Insert number**> months after date of Substantial Completion, Installer's Architectural Hardware Consultant shall examine and readjust, including adjusting operating forces, each item of door hardware as necessary to ensure function of doors, door hardware, and electrified door hardware.

3.6 CLEANING AND PROTECTION

A. Clean adjacent surfaces soiled by door hardware installation.

B. Clean operating items as necessary to restore proper function and finish.

C. Provide final protection and maintain conditions that ensure that door hardware is without damage or deterioration at time of Substantial Completion.

3.7 DEMONSTRATION

A. Engage a factory-authorized service representative to train Owner's maintenance personnel to adjust, operate, and maintain door hardware and door hardware finishes. Refer to Division 1 Section "Demonstration and Training."

3.8 DOOR HARDWARE SETS

PRIVATE tbl1

Door Hardware Set No. <**Insert number**>

Door No. <**Insert designation(s)**>; each to have the following:

No.	Item	Description	Finish
*	Hanging Devices	<**Insert description.**>	<**Insert finish.**>
[#]	Securing Devices (inactive leaf)	<**Insert description.**>	<**Insert finish.**>
[#]	Securing Devices (active leaf)	<**Insert description.**>	<**Insert finish.**>
[#]	Operating Trim	<**Insert description.**>	<**Insert finish.**>
[#]	Accessories for Pairs of Doors	<**Insert description.**>	<**Insert finish.**>
[#]	Closing Devices	<**Insert description.**>	<**Insert finish.**>

[#]	Protective Trim Units	<**Insert description.**>	<**Insert finish.**>
[#]	Stops and Holders	<**Insert description.**>	<**Insert finish.**>
[#]	Accessories	<**Insert description.**>	<**Insert finish.**>
[#]	Miscellaneous Items	<**Insert description.**>	<**Insert finish.**>

* Number of hinges, as specified.

END OF SECTION 08712

SECTION 08 90 00
LOUVERS AND VENTS

PART 1 - GENERAL

1.1 DESCRIPTION

A. This section specifies fixed and operable wall louvers, door louvers and wall vents.

1.2 RELATED WORK

A. Section 08 11 13, HOLLOW METAL DOORS AND FRAMES: Louvers in Steel Doors.

B. Section 09 06 00, SCHEDULE FOR FINISHES: Color of finish.

C. Section 13 49 00, RADIATION PROTECTION: Louvers in lead lined wood doors.

1.3 SUBMITTALS

A. Submit in accordance with Section 01 33 23, SHOP DRAWINGS, PRODUCT DATA, AND SAMPLES.

B. Shop Drawings:

1. Each type, showing material, finish, size of members, // operating devices, // method of assembly, and installation and anchorage details.

C. Manufacturer's Literature and Data:

1. Each type of louver and vent.

D. Color samples.

E. Blast Design Calculations: Louver System and Anchorage

1. Submit calculations for review and approval prepared by qualified blast consultant, with a minimum of 5 years experience in design of blast resistant window systems, verifying louver assembly including anchors comply with specified blast resistance performance. The magnitudes of the design threats W1,W2 and GP1,GP2 are defined in the Physical Security Design Standards Data Definitions which is a document separate from the referenced VA Security Design Manual. The Physical Security Design Standards Data Definitions are provided on a need to know basis by the blast/structural engineer performing the blast design on VA projects. It is the responsibility of the engineer of blast resistant windows to request and obtain the Physical Security Design Data Standard Data Definitions from the VA Office of Construction and Facilities Management (CFM). Any

associated delays or increased costs due to failure to obtain this information will be borne by the contractor.

1.4 APPLICABLE PUBLICATIONS:

A. The publications listed below form a part of this specification to the extent referenced. The publications are referenced in the text by the basic designation only.

B. The Master Painters Institute (MPI):
Approved Product List – Updated Monthly

C. ASTM International (ASTM):

A240/A240M-20	Chromium and Chromium-Nickel Stainless Steel Plate, Sheet, and Strip for Pressure Vessels and for General Applications
A653/A653M-20	Steel Sheet Zinc-Coated (Galvanized) or Zinc-Iron Alloy Coated (Galvannealed) by the Hot Dip Process
A1008/A1008M-20	Steel, Sheet, Carbon, Cold Rolled, Structural, and High Strength Low-Alloy with Improved Formability
B209-14	Aluminum and Aluminum Alloy, Sheet and Plate
B209M-14	Aluminum and Aluminum Alloy, Sheet and Plate (Metric)
B221-14	Aluminum and Aluminum Alloy Extruded Bars, Rods, Wire, Shapes, and Tubes
B221M-13	Aluminum and Aluminum Alloy Extruded Bars, Rods, Wire, Shapes, and Tubes (Metric)
D1187/D1187M-97(2018) ..	Asphalt-Base Emulsions for Use as Protective Coatings for Metal

D. National Association of Architectural Metal Manufacturers (NAAMM):

AMP 500-06	Metal Finishes Manual

E. National Fire Protection Association (NFPA):

90A-15	Installation of Air Conditioning and Ventilating Systems

F. American Architectural Manufacturers Association (AAMA):

2605-13	High Performance Organic Coatings on Architectural Extrusions and Panels

G. Air Movement and Control Association, Inc. (AMCA):

500-L-07	Testing Louvers

H Department of Veterans Affairs:

//VA Physical Security Design Manual for Life Safety Protected Facilities January 2015//

// VA Physical Security Design Manual for Mission Critical Protected Facilities January 2015//

I. Protective Design Center

PDC-TR-08 Single Degree of Freedom Structural Response Limits for Antiterrorism Design

PART 2 - PRODUCTS

2.1 MATERIALS:

A. Aluminum, Extruded: ASTM B221M (B221).

B. Stainless Steel: ASTM A240/A240M, Type 302B.

C. Galvanized Steel Sheet: ASTM A653/A653M; G90 min.

D. Carbon Steel and Sheet: ASTM A1008/A1008M (interior use louvers only).

E. Aluminum, Plate and Sheet: ASTM B209M (B209); alloy 3003 or 5005 with temper as required for forming.

F. Fasteners: Fasteners for securing louvers and wall vents to adjoining construction, except as otherwise specified or indicated in construction documents, to be toggle or expansion bolts of size and type as required for each specific type of installation and service condition.

1. Where type, size, or spacing of fasteners is not shown or specified, submit shop drawings showing proposed fasteners, and method of installation.
2. Fasteners for louvers, louver frames, and wire guards to be of stainless steel or aluminum with same finish as louvers.
3. Fasteners for louvers, louver frames and wire guards within mental health areas to be non-removable/tamper-proof type.

G. Inorganic Zinc Primer: MPI No. 19.

H. Bituminous Coating: ASTM D1187/D1187M; cold applied asphalt mastic emulsion.

2.2 EXTERIOR WALL LOUVERS:

A. General:

1. Provide // fixed // // and operable // type louvers of size and design shown.
2. Heads, sills and jamb sections are to have formed caulking slots or be designed to retain caulking. Head sections are to have exterior drip lip, and sill sections an integral water stop.

3. Furnish louvers with sill extension or separate sill as shown.
4. Frame is to be mechanically fastened or welded construction with welds dressed smooth and flush.

B. Performance Characteristics:

1. Weather louvers are to have a minimum of // // percent free area and to pass // // mm/s (// // fpm) free area velocity at a pressure drop not exceeding // // mm (// // inch) water gauge and carry not more than // // g (// // ounces) of water per square meter (// // square foot) of free area for 15 minutes when tested per AMCA Standard 500-L.
2. Louvers are to bear AMCA certified rating seals for air performance and water penetration ratings.
3. Blast Resistance:
   A. Louvers in exterior walls shall be blast resistant and meet the following criteria per the VA Physical Security Design Manual for //Life Safety // //Mission Critical//Protected Facilities January 2015:
      1. Standoff Distance: //25 feet (Life Safety Protected) //50 feet (Mission Critical Protected)//
         a. Design Threat W1 at the standoff distance not to exceed pressure and impulse associated with //GP1 threat for Life Safety Protected Buildings// // W1 at the standoff distance not to exceed pressure and impulse associated with GP2 threat for Mission Critical Protected Buildings//.
         b. Deformation not to exceed those defined by B3 response per the Protective Design Center document PDC-TR-08 while experiencing design level pressures.

C. Aluminum Louvers:

1. General: Frames, blades, // sills // and mullions (sliding interlocking type); 2 mm (0.078-inch) thick extruded 6063-T5 or –T52 aluminum. Blades to be // standard // // drainable // type and have reinforcing bosses.
2. Louvers, fixed: Make frame sizes 13 mm (1/2-inch) smaller than openings. Single louvers frames are not to exceed 1676 mm (66 inches) wide. When openings exceed 1676 mm (66 inches), provide twin louvers separated by mullion members.

3. Louvers are to withstand the effects or gravity loads and the following wind loads and stresses within limits and under conditions indicated without permanent deformation of louver components, noise or metal fatigue caused by louver-blade rattle or flutter, or permanent damage to fasteners and anchors.
   a. Wind load acting inward or outward of not less than 1436 //_____// Pa (30 //_____// pound per square foot.).
4. Louvers, operable: Louver frame opening sizes, single louver sizes and mullion requirements are to be as specified for fixed louvers.
   a. Blades: Attach blades to frame with aluminum pivot pins through nylon bearings. Fasten each blade to stainless steel operation arms that are connected to minimum 3 mm (1/8-inch) thick stainless steel operating // bar // // handle // arranged for simultaneous operation of blades.
   b. //Spring/chain operation: Exposed operator activated by spring attached to operating // bar // // handle // and mounted on frame.// //Control of louver to be by pull chain of required length to be operable from floor. Provide pulleys and brackets as required.//
   c. //Hand crank operation: Hand crank operator activated by case hardened gears concealed in aluminum housing. Operators are to be removable and located at jambs. Provide one right-handed operator for each louver. //
   d. // Motor operation: Motor operated by approved electric motor. Motors are to be removable and located at jambs of louver. Connect motor operator lever arm to operating bar by means of stainless steel connecting rod. //
   e. // Automatic operation: Louvers are to be complete with // weights, // // pull chain, // // chain holder and brackets, // // cables, // // sheaves, // // spring, // // 70 degrees C (160 degrees F) fusible link, // and other related items meeting requirements of NFPA 90A. Provide non-ferrous bearings and spindles of replaceable type. // Control of louver to be by pull chain of required length to be operable from floor. // Louvers are to close automatically in case of fire. //

D. Stainless Steel Louvers: Form stainless steel louvers using 1.6 mm (0.063-inch) thick sheet for frames, blades, sills and mullions.

1. Provide louver with fixed 45 degree // standard // // drainable // blades with water baffle. Make overall frame size 13 mm (1/2-inch) less than opening, unless otherwise indicated in construction documents.
2. Single louver sections are not to exceed 1676 mm (66 inches) in width. For openings larger than 1676 mm (66 inches) wide, provide multiple sections not larger than 1676 mm (66 inches) wide separated by mullions.

E. Formed Steel Louvers: Form // galvanized // louvers using 1.5 mm (0.059-inch) thick sheet for frames, blades, sills and mullions.
1. Provide louver with fixed 45 degree // standard // // drainable // blades with water baffle. Make overall frame size 13 mm (1/2-inch) less than opening, unless otherwise indicated in construction documents.
2. Single louver sections are not to exceed 1676 mm (66 inches) in width. For openings larger than 1676 mm (66 inches) wide, provide multiple sections not larger than 1676 mm (66 inches) side separated by mullions.

2.3 CLOSURE ANGLES AND CLOSURE PLATES:

A. Fabricate from 2 mm (0.078-inch) thick stainless steel or aluminum.
B. Provide continuous closure angles and closure plates on inside head, jambs and sill of exterior wall louvers.
C. Secure angles and plates to louver frames with screws, and to masonry or concrete with fasteners as indicated in construction documents.

2.4 WIRE GUARDS:

A. Provide wire guards on outside of all exterior louvers, except on exhaust air louvers.
B. Fabricate frames from // 2 mm (0.078-inch) thick extruded or sheet aluminum // // 1.5 mm (0.059-inch) thick stainless steel // designed to retain wire mesh.
C. Wire mesh to be woven from not less than // 1.6 mm (0.063-inch) diameter aluminum wire // // 1.3 mm (0.05-inch) diameter stainless steel wire // in 13 mm (1/2-inch) square mesh.
D. Miter corners and join by concealed corner clips or locks extending not less than 57 mm (2-1/4 inches) into rails and stiles. Equip wire guards over 1219 mm (4 feet) in height with a mid-rail constructed as specified for frame components.

E. Fasten frames to outside of louvers with aluminum or stainless steel devices of same finish as louvers designed to allow removal and replacement without damage to the wire guard or the louver.

2.5 BLANK-OFF PANELS:

A. Uninsulated panels attached with clips or screws as follows: Panel finish is to be // same finish applied to louvers // // same finish type applied to louvers but black color //.

1. Aluminum sheet for aluminum louvers, 1.27 mm (0.050 inch) minimum thickness.
2. Galvanized-steel sheet for galvanized-steel louvers, 1.02 mm (0.040 inch) minimum.
3. Stainless-steel sheet for stainless-steel louvers, not less than 0.95 mm (0.038 inch) minimum.

B. Insulated laminated panels consisting of an insulating core surfaced on back and front with metal sheets and attached to back of louver with clips on screws and gasketed or sealant sealed perimeter. Panel finish is to be // same finish applied to louvers // //same type of finish applied to louvers but black color //.

1. Thickness: // 25 mm (1 inch) // // 50 mm (2 inches) // .
2. Aluminum sheet for aluminum louver 0.81 mm (0.032 inch) minimum.
3. Galvanized-steel sheet for galvanized-steel louver 0.71 mm (0.028 inch) minimum.
4. Stainless-steel sheet for stainless-steel louvers 0.79 mm (0.031 inch) minimum.
5. Insulating Core: // Rigid, glass-fiber-board insulation // // extruded-polystyrene foam //.

2.6 EXTERIOR DOOR LOUVERS:

A. Fabricate of 1.6 mm (0.063-inch) thick extruded aluminum. Miter frames at corners and join by concealed corner brackets. Louvers are to be weather resistant type.

B. Equip louvers on outside with wire guards, except omit wire guards for louvers in doors located completely below enclosed areaways.

2.7 INTERIOR DOOR LOUVERS:

A. Fabricate louvers for interior doors // and partitions of // // 1.2 mm (0.0472-inch) thick steel // // 1.6 mm (0.063-inch) thick extruded aluminum //.

B. Make louvers sight-proof type with stationary blades, // except where light-proof louvers are required //.

C. //Lightproof louvers are to have stationary blades and be designed to exclude passage of light but permit free ventilation. //

2.8 WALL VENTS:

A. Fabricate exterior wall vents from either 4.7 mm (0.185-inch) thick aluminum plate or 6 mm (1/4-inch) thick cast iron, perforated in diamond lattice pattern, with not over 19 mm (3/4-inch) openings.

B. Vents are to have aluminum screen frame with aluminum alloy insect screening mounted on back of vent by means of 19 mm x 5 mm (3/4-inch by 3/16-inch) top and bottom bars screwed to grille.

C. Vent Frames in Masonry: Fabricate of 45 mm x 30 mm x 5 mm (1-3/4 inch by 1-1/4 inch by 3/16-inch) steel angles bolted with 6 mm (1/4-inch) diameter expansion bolts at jambs.

2.9 AIR INTAKE VENTS:

A. Fabricate exterior louvered wall ventilators for fresh air intake for air conditioning units from extruded aluminum, ASTM B221M (B221). Form with integral horizontal louvers and frame, with drip extending beyond face of wall and integral water stops.

B. //Provide aluminum closures where shown for inside face of dummy vents.//

C. Provide 0.8 mm (0.032-inch) thick aluminum sleeves // in cavity walls // // where indicated in construction documents //.

2.10 BRICK VENTS:

A. Vents are to be of size shown formed of approximately 3 mm (0.125 inch) thick cast aluminum, or 3 mm (0.118 inch) extruded aluminum.

B. Provide vents complete with aluminum screen frame with corrosion resistant insect screening mounted on back of vent.

C. Provide vents with required anchors.

2.11 FINISH:

A. In accordance with NAAMM Metal Finishes Manual: AMP 500-505

B. Aluminum Louvers // Air Intake Vents // // Wire Guards // // Blank Off Panels //:

1. Anodized finish

a. //AA-M1X, Mill finish, as fabricated.//

b. //AA-M10C22A41, Chemically etched medium matte, with clear anodic coating, Class I Architectural, 0.17 mm (0.7 mils) thick.//

c. //AA-M10C22A42, Chemically etched medium matte, with integrally colored anodic coating, Class I Architectural, 0.17 mm (0.7 mils) thick.//

d. //AA-M10C22A44, Chemically etched medium matte, with electronically deposited metallic compound, Class I Architectural, 0.17 mm (0.7 mils) thick color anodic coating. Dyes will not be accepted.//

2. Organic Finish: AAMA 2605 (Fluorocarbon coating) with total dry film thickness of not less than 0.03 mm (1.2 mil), color as indicated in Section 09 06 00, SCHEDULE FOR FINISHES.

A. Aluminum // Wall Vents // // and Brick Vents //: Sand blasted satin finish.

B. Stainless Steel: Mechanical finish No. 4 in accordance with NAAMM Metal Finishes Manual.

C. Galvanized Sheet Steel: Two-coat baked-enamel or powder-coat finish consisting of prime coat and thermosetting topcoat, with a minimum dry film thickness of 0.05 mm (2 mils).

1. Paint interior surfaces of lightproof louvers with two (2) additional finish shop coats of baked-on flat black enamel.

2. //Finish painting of exposed surfaces of shop primed louvers is specified in Section 09 91 00, PAINTING. //

3. //Manufacturer finished louvers // and blank-off panels // are to have color as indicated in Section 09 06 00, SCHEDULE FOR FINISHES. //

D. Steel: Surfaces of steel work, for which no other finish is specified, are to be cleaned free from scale, rust, oil and grease, and then given a light colored prime paint after fabrication, except ferrous metals concealed in finished work. Paint all contact surfaces of assembled work (except welded contact surfaces) with an additional shop coat of similar paint.

2.12 PROTECTION:

A. Provide protection for aluminum against galvanic action wherever dissimilar materials are in contact, by painting the contact surfaces of the dissimilar material with a heavy coat of bituminous coating (complete coverage), or by separating the contact surfaces with a performed synthetic rubber tape having pressure sensitive adhesive coating on one side.

B. Isolate the aluminum from plaster, concrete and masonry by coating aluminum with zinc-chromate primer.

C. Protect finished surfaces from damage during fabrication, erection, and after completion of the work. Strippable plastic coating on // colored anodized // // organic // finish is not approved.

PART 3 - EXECUTION

3.1 INSTALLATION:

A. Set work accurately, in alignment and where indicated in construction documents. Install plumb, level, free of rack and twist, and set parallel or perpendicular as required to line and plane of surface.

B. Furnish setting drawings and instructions for installation of anchors and for the positioning of items having anchors to be built into masonry construction. Provide temporary bracing for such items until masonry is set.

C. Provide anchoring devices and fasteners as shown and as necessary for securing louvers // and vents // to building construction as specified. Power actuated drive pins may be used, except for removal items and where members would be deformed or substrate damaged by their use.

D. Set wall louvers // and vents // in masonry walls during progress of the work. If wall louvers // and vents // are not delivered to job in time for installation in prepared openings, make provision for later installation. Set in cast-in-place concrete in prepared openings.

3.2 CLEANING AND ADJUSTING:

A. After installation, all exposed prefinished and plated items and all items fabricated from stainless steel and aluminum are to be cleaned as recommended by the manufacturer and protected from damage until completion of the project.

B. All movable parts, including hardware, are to be cleaned and adjusted to operate as designed without binding or deformation of the members, so as to be centered in the opening of frame, and where applicable, to have all contact surfaces fit tight and even without forcing or warping the components.

C. Restore louvers and vents damaged during installation and construction so no evidence remains of corrective work. If results of restoration are unsuccessful, as determined by Contracting Officer Representative (COR) damaged units and replace with new units.

- - - E N D - - -

Division 9 – Finishes

SECTION 09180
CEMENT PLASTER

1- RELATED DOCUMENTS

The general provisions of the contract including General and Special Conditions, apply to the work specified in this section.

2- DESCRIPTION OF WORK

The extent of the portland cement plaster work is shown on the drawings.

3. GENERAL

Delivery and Storage of Materials:

Except for sand and water, deliver materials to the site in sealed containers or bags fully identified with manufacturer's name, brand, type and grade. Store materials in a dry, well-ventilated space, under cover, off the ground and away from surfaces subject to dampness or condensation.

Warm Weather Requirements:

Protect plaster against uneven and excessive evaporation and from strong blasts of dry air, both natural or artificial. Apply and cure plaster as required by climatic and job conditions to prevent rapid dryout. Provide suitable coverings, moist curing, barriers to deflect sunlight and wind, or combinations of these, as required.

Ventilation Requirements:

Provide natural or mechanical means of ventilation to properly dry interior plaster during and after application.

Sample Installation:

Prior to installation of plaster work, plaster sample section of each type of plaster required for approval of the Arch. Demonstrate the proposed range of texture, workmanship, and color if required, to be expected in the complete work.

4. MATERIALS

Bonding Compound:

ASTM C 631 of FS MMM – B 350 or MIL Spec. – 19235.

For exterior use, provide bonding compound which is not affected by moisture on surface or present in plaster base and suitable for temperature conditions at application time.

Aggregate:

Natural or manufactured sand, complying with ASTM C 144, except grade within the following limits (expressed as the minimum and maximum percentage retained by weight on U.S. Standard Sieves, plus or minus 2%); No. 4 Sieve – 0%, No. 8 Sieve – 0 to 16%., No. 16 Sieve – 10 to 40%, No. 30 Sieve – 30 to 65%, No. 50 Sieve – 95 to 100%.

Portland Cement:

ASTM C 150, Type I color gray unless otherwise called for by the finish schedule.

5. INSTALLATION

General Requirements:

Contractor must examine all surfaces which are to receive plaster and all grounds and other accessories which act as grounds or screeds, and shall notify the Architect in writing, of any conditions detrimental to the proper and timely completion of the work. do not proceed with the plaster work until unsatisfactory conditions have been corrected in a manner acceptable to the Contractor.

Protect continuous work from rusting or soiling as a result of plastering operations.

Mix materials for a minimum of 2 minutes or until all ingredients present a uniform color in the mixer. Use the minimum amount of water required to produce plaster of a workable consistency. Use only clean water, fre from impurities which might impair the plaster work.

Hand apply plaster to the specified thickness. Machine application of plaster will not be allowed, except where sprayed-on plaster is specified.

Apply plaster to an entire wall or ceiling panel with interruptions occurring only at junctions of plaster planes or at openings or expansion and control joints (if any). Where the distance between such natural interruptions exceeds 20' in either direction, plaster application may be interrupted when the practical application limits is exceeded.

Where plaster abuts frames or other items of metal or wood which act as plaster ground, and plaster is not terminated by a casing bead, tool edge of plaster to produce a small uniform "V" joint.

Wherever a masonry wall abuts or adjoins the concrete framework, tool plaster to produce a "V" joint.

Plaster work shall be finished level, plumb, square, and true, within a tolerance of 1/8-inch in 10 feet, without waves, cracks, blisters, pits, crazing, discoloration, projections, or other imperfections. Plaster work shall be formed carefully around angles and contours, and well up to screeds. Special care shall be taken to prevent sagging. There shall be no visible junction marks in finish coat where one day's work adjoins another. Finished work shall be covered and protected in an approved manner to prevent damage.

Plaster Proportions: (By volume)

Sand	5 3/4	parts
Lime	1	parts
Cement	1 1/3	parts

Hair or fiber may be used in the mix for the first (scratch) basecoat applied to metal lath. Do not use more than one pound of hair or fiber per bag of cementitious material. Use goat, cattle or deer hair or pure manilla fiber, ½" to 2" long, free from grease, oil, deer and other impurities.

Accurately measure ingredients, including water, using measuring devices of known volume. Do not use shovel or water buckets as measuring devices. Proportion successive batches alike.

Place coat within a maximum of 2-1/2 hours after mixing, except during hot, dry weather, reduce maximum placing time as required to prevent premature stiffening of plaster.

Plaster over Metal Lath:

Apply 3 – coat plaster over all metal lath, with or without solid backing. Apply first (scratch) coat not less than ½" thick and second (brown) basecoat not less than ¼" thick.

Measure thickness of plaster from back plane of metal lath (exclusive of ribs of dimples), except if metal lath is applied over solid base, measure from face of solid baking.

Apply first basecoat with sufficient material and pressure to form full keys through metal lath and to embed lath with sufficient plaster coverage. After first coat is firm, scratch (score) in one direction only, to provide mechanical bond for second coat. On vertical surfaces, scratch in horizontal direction.

Apply second basecoat with sufficient material and pressure to ensure tight contact with first basecoat. Bring surface to a true, even plane rodding and float to a uniformly rough surface. Fill defects and scratches with plaster.

After the second coat has been allowed to dry slowly for 24 hours, the finish coat shall be applied to a thickness of not less than 1/8" thick, with a sand float finish.

Plaster over Concrete or Masonry:

Surfaces shall be free of loose or deteriorated areas, clean and free of dust, loose particles, and foreign matter.

Apply bonding agent to concrete surfaces prior to application of plaster, in accordance with manufacturer's instructions.

Apply plaster in a single coat not less than 3/8" thick, rod to a true, smooth surface and float to an even sand finish.

Moisture Retention Requirements:

Dampen bases, if required, for proper suction. Do not saturate bases and do not apply plaster until visible surface water disappears.

Dampen previous plaster coats which have dried out prior to time for applications of next coat. Dampen with water as required for uniform suction.

The Contractor is responsible for determining the most effective procedure for curing and time lapse between applications of coats based on climatic and job conditions. Plaster which is cracked or crazed due to improper timing and curing will not be accepted. Remove and replace unacceptable plaster including plaster base materials, if damaged during removal of defective plaster.

6. CUTTING AND PATCHING

Cut, patch, repair, and point-up plaster as required and as directed by the Arch. Repair cracks and indented surfaces by moistening plaster and filling with new material, throweled or tamped flush with adjoining surfaces. Point-up finish plaster surfaces around items which are built into or penetrate plaster surfaces.

7. CLEANING AND PROTECTION

Make provisions to minimize spattering of plaster on other work. Promptly remove plaster from door frames, windows and other surfaces which are not to be plastered. Repair floors, walls and other surfaces which have been stained, marred or otherwise damaged during the plastering work. When plastering work is completed, remove unused materials, containers and equipment and clean floors of all plaster debris.

Contractor shall be aware of requirements for protection of plaster from deterioration and damage until time of acceptance of the work.

END OF SECTION

SECTION 09671 - RESINOUS FLOORING

PART 1 - GENERAL

1.1 RELATED DOCUMENTS

A. Drawings and general provisions of the Contract, including General and Supplementary Conditions and Division 1 Specification Sections, apply to this Section.

1.2 SUMMARY

A. This Section includes resinous flooring systems with [**epoxy**] [**epoxy-novolac**] [**urethane**] [**vinyl-ester**] <**Insert resin**> body coat(s).

1. Application Method: [**Self-leveling slurry with broadcast aggregates**] [**Self-leveling slurry**] [**Troweled or screeded**].

B. Related Sections include the following:

1. Division 1 Section "LEED Requirements" for additional LEED requirements.
2. Division 7 Section "Joint Sealants" for sealants installed at joints in resinous flooring systems.
3. Division 9 Section "Epoxy Terrazzo" for thin-set, resinous terrazzo.

1.3 SUBMITTALS

A. Product Data: For each type of product indicated. Include manufacturer's technical data, application instructions, and recommendations for each resinous flooring component required.

B. Samples for Initial Selection: For each type of exposed finish required.

C. Samples for Verification: For each resinous flooring system required, 6 inches (150 mm) square, applied to a rigid backing by Installer for this Project.

D. LEED Submittals:

1. Credit EQ 4.1: Manufacturers' product data for installation adhesive, including printed statement of VOC content.

E. Product Schedule: Use resinous flooring designations indicated in Part 2 and room designations indicated on Drawings in product schedule.

F. Installer Certificates: Signed by manufacturer certifying that installers comply with specified requirements.

G. Material Test Reports: For each resinous flooring component.

H. Material Certificates: For each resinous flooring component, signed by manufacturer.

I. Maintenance Data: For resinous flooring to include in maintenance manuals.

1.4 QUALITY ASSURANCE

A. Installer Qualifications: Engage an experienced installer (applicator) who is experienced in applying resinous flooring systems similar in material, design, and extent to those indicated for this Project, whose work has resulted in applications with a record of successful in-service performance, and who is acceptable to resinous flooring manufacturer.

1. Engage an installer who employs only persons trained and approved by resinous flooring manufacturer for applying resinous flooring systems indicated.
2. Engage an installer who is certified in writing by resinous flooring manufacturer as qualified to apply resinous flooring systems indicated.

B. Source Limitations: Obtain primary resinous flooring materials, including primers, resins, hardening agents, grouting coats, and topcoats, through one source from a single manufacturer. Provide secondary materials, including patching and fill material, joint sealant, and repair materials, of type and from source recommended by manufacturer of primary materials.

C. Federal Agency Approvals: Where indicated, provide resinous flooring systems approved by the [**USDA**] [**FDA**] for use indicated.

D. Mockups: Apply mockups to verify selections made under sample submittals and to demonstrate aesthetic effects and set quality standards for materials and execution.

1. Apply full-thickness mockups on 48-inch- (1200-mm-) square floor area selected by Architect.

   a. Include 48-inch (1200-mm) length of integral cove base.

2. Simulate finished lighting conditions for Architect's review of mockups.
3. Approved mockups may become part of the completed Work if undisturbed at time of Substantial Completion.

1.5 DELIVERY, STORAGE, AND HANDLING

A. Deliver materials in original packages and containers, with seals unbroken, bearing manufacturer's labels indicating brand name and directions for storage and mixing with other components.

B. Store materials to prevent deterioration from moisture, heat, cold, direct sunlight, or other detrimental effects.

1.6 PROJECT CONDITIONS

A. Environmental Limitations: Comply with resinous flooring manufacturer's written instructions for substrate temperature, ambient temperature, moisture, ventilation, and other conditions affecting resinous flooring application.

B. Lighting: Provide permanent lighting or, if permanent lighting is not in place, simulate permanent lighting conditions during resinous flooring application.

C. Close spaces to traffic during resinous flooring application and for not less than 24 hours after application, unless manufacturer recommends a longer period.

PART 2 - PRODUCTS

2.1 RESINOUS FLOORING <**Insert drawing designation**>

A. Available Products: Subject to compliance with requirements, products that may be incorporated into the Work include, but are not limited to, the following:

B. Products: Subject to compliance with requirements, provide one of the following:

1. Arizona Polymer Flooring, Inc.; <**Insert product designation(s)**>.
2. Atlas Minerals & Chemicals, Inc., Polymer Flooring Division; <**Insert product designation(s)**>.
3. ChemMasters; <**Insert product designation(s)**>.
4. Crawford Laboratories, Inc.; <**Insert product designation(s)**>.
5. Crossfield Products Corp., Dex-O-Tex; <**Insert product designation(s)**>.
6. Dur-A-Flex Inc.; <**Insert product designation(s)**>.
7. General Polymers Corporation, a division of the Sherwin-Williams Company; <**Insert product designation(s)**>.
8. Key Resin Company; <**Insert product designation(s)**>.
9. Kinsman Corporation, Nox-Crete, Inc.; <**Insert product designation(s)**>.
10. Micor Company, Inc.; <**Insert product designation(s)**>.
11. Pacific Polymers, Inc.; <**Insert product designation(s)**>.
12. Palma, Inc.; <**Insert product designation(s)**>.
13. Polymerica Incorporated; <**Insert product designation(s)**>.
14. Protective Floorings & Linings, Inc.; <**Insert product designation(s)**>.
15. RBC Industries, Inc.; <**Insert product designation(s)**>.
16. Rust-Oleum Concrete Protection Systems, Inc.; <**Insert product designation(s)**>.
17. Seamco Laboratories, Inc.; <**Insert product designation(s)**>.
18. Selby-Ucrete Industrial Flooring, a division of Master Builders, Inc.; <**Insert product designation(s)**>.
19. Silikal Resin Systems; <**Insert product designation(s)**>.
20. Stonhard, Inc.; <**Insert product designation(s)**>.
21. Tamms Industries, Inc.; <**Insert product designation(s)**>.
22. Torginol, Inc.; <**Insert product designation(s)**>.
23. Ultradec, Inc.; <**Insert product designation(s)**>.
24. Valspar, Federal Flooring Division; <**Insert product designation(s)**>.
25. <**Insert manufacturer's name; product designations(s).**>

C. System Characteristics:

1. Color and Pattern: [**As selected by Architect from manufacturer's full range**] [**As indicated by product designation listed above**] [**Match Architect's sample**] <**Insert description**>.
2. Wearing Surface: [**Textured for slip resistance**] [**Manufacturer's standard orange-peel texture**] [**Smooth**] <**Insert description**>.
3. Integral Cove Base: [**4 inches (100 mm)**] <**Insert dimension**> high.
4. Overall System Thickness: [**1/16 inch (1.6 mm)**] [**1/8 inch (3.2 mm)**] [**3/16 inch (4.8 mm)**] [**1/4 inch (6.4 mm)**] <**Insert thickness**>.
5. Federal Agency Approvals: [**USDA**] [**FDA**] approved for food-processing environments.

D. System Components: Manufacturer's standard components that are compatible with each other and as follows:

1. Body Coat(s):

   a. Resin: [**Epoxy**] [**Epoxy novolac**] [**Urethane**] [**Vinyl ester**] <**Insert resin**>.
   b. Formulation Description: [**100 percent solids**] [**High solids**] [**Water based**] <**Insert requirements**>.
   c. Application Method: [**Self-leveling slurry with broadcast aggregates**] [**Self-leveling slurry**] [**Troweled or screeded**].

      1) Thickness of Coats: [**1/16 inch (1.6 mm)**] [**1/8 inch (3.2 mm)**] [**3/16 inch (4.8 mm)**] [**1/4 inch (6.4 mm)**] <**Insert dimension**>.
      2) Number of Coats: [**One**] [**Two**].

   d. Aggregates: [**Manufacturer's standard**] [**Colored quartz (ceramic-coated silica)**] [**Vinyl flakes**] [**Granite**] [**Natural silica**] <**Insert requirements**>.

2. Primer: Type recommended by manufacturer for substrate and body coat(s) indicated.

   a. Formulation Description: [**100 percent solids**] [**High solids**] [**Water based**] <**Insert requirements**>.

3. Waterproofing Membrane: Type recommended by manufacturer for substrate and primer and body coat(s) indicated.

   a. Formulation Description: [**100 percent solids**] [**High solids**] <**Insert requirements**>.

4. Reinforcing Membrane: Flexible resin formulation that is recommended by manufacturer for substrate and primer and body coat(s) indicated and that prevents substrate cracks from reflecting through resinous flooring.

   a. Formulation Description: [**100 percent solids**] [**High solids**] <**Insert requirements**>.
   b. Provide fiberglass scrim embedded in reinforcing membrane.

5. Topcoat: [**Chemical-resistant**] [**UV-resistant**] <**Insert requirements**> sealing or finish coat(s).

a. Resin: [**Epoxy**] [**Epoxy novolac**] [**Urethane**] [**Vinyl ester**] <**Insert resin**>.
b. Formulation Description: [**100 percent solids**] [**High solids**] [**Water based**] <**Insert requirements**>.
c. Type: [**Clear**] [**Pigmented**] <**Insert description**>.
d. Finish: [**Matte**] [**Gloss**].
e. Number of Coats: [**One**] [**Two**].

E. System Physical Properties: Provide resinous flooring system with the following minimum physical property requirements when tested according to test methods indicated:

1. Compressive Strength: <**Insert value**> per ASTM C 579.
2. Tensile Strength: <**Insert value**> per ASTM C 307.
3. Flexural Modulus of Elasticity: <**Insert value**> per ASTM C 580.
4. Water Absorption: <**Insert value**> per ASTM C 413.
5. Coefficient of Thermal Expansion: <**Insert value**> per ASTM C 531.
6. Indentation: <**Insert value**> percent maximum per MIL-D-3134.
7. Impact Resistance: No chipping, cracking, or delamination and not more than 1/16-inch (1.6-mm) permanent indentation per MIL-D-3134.
8. Resistance to Elevated Temperature: No slip or flow of more than 1/16 inch (1.6 mm) per MIL-D-3134.
9. Abrasion Resistance: <**Insert value**> maximum weight loss per ASTM D 4060.
10. Flammability: Self-extinguishing per ASTM D 635.
11. Hardness: <**Insert value**>, Shore D per ASTM D 2240.
12. Bond Strength: <**Insert value**>, 100 percent concrete failure per ACI 503R.

F. System Chemical Resistance: Test specimens of cured resinous flooring system are unaffected when tested according to [**ASTM D 543, Procedure A, for immersion**] [**ASTM C 267 for immersion**] [**ASTM D 1308 for 50 percent immersion**] <**Insert testing requirements**> in the following reagents for not less than 7 days:

1. <**Insert list of reagents that Owner has determined are likely to contact resinous flooring during in-service use.**>

2.2 ACCESSORY MATERIALS

A. Patching and Fill Material: Resinous product of or approved by resinous flooring manufacturer and recommended by manufacturer for application indicated.

B. Joint Sealant: Type recommended or produced by resinous flooring manufacturer for type of service and joint condition indicated.

1. Use sealants that have a VOC content of [**250**] <**Insert limit**> g/L or less when calculated according to 40 CFR 59, Subpart D (EPA Method 24).

PART 3 - EXECUTION

3.1 PREPARATION

A. General: Prepare and clean substrates according to resinous flooring manufacturer's written instructions for substrate indicated. Provide clean, dry, and neutral Ph substrate for resinous flooring application.

B. Concrete Substrates: Provide sound concrete surfaces free of laitance, glaze, efflorescence, curing compounds, form-release agents, dust, dirt, grease, oil, and other contaminants incompatible with resinous flooring.

1. Roughen concrete substrates as follows:

a. Shot-blast surfaces with an apparatus that abrades the concrete surface, contains the dispensed shot within the apparatus, and recirculates the shot by vacuum pickup.
b. Comply with ASTM C 811 requirements, unless manufacturer's written instructions are more stringent.

2. Repair damaged and deteriorated concrete according to resinous flooring manufacturer's written recommendations.
3. Verify that concrete substrates are dry.

a. Perform anhydrous calcium chloride test, ASTM F 1869. Proceed with application only after substrates have maximum moisture-vapor-emission rate of [**3 lb of water/1000 sq. ft. (1.36 kg of water/92.9 sq. m) of slab**] <**Insert emission rate**> in 24 hours.
b. Perform plastic sheet test, ASTM D 4263. Proceed with application only after testing indicates absence of moisture in substrates.
c. Perform additional moisture tests recommended by manufacturer. Proceed with application only after substrates pass testing.

4. Verify that concrete substrates have neutral Ph and that resinous flooring will adhere to them. Perform tests recommended by manufacturer. Proceed with application only after substrates pass testing.

C. Resinous Materials: Mix components and prepare materials according to resinous flooring manufacturer's written instructions.

D. Use patching and fill material to fill holes and depressions in substrates according to manufacturer's written instructions.

E. Treat control joints and other nonmoving substrate cracks to prevent cracks from reflecting through resinous flooring according to manufacturer's written recommendations.

3.2 APPLICATION

A. General: Apply components of resinous flooring system according to manufacturer's written instructions to produce a uniform, monolithic wearing surface of thickness indicated.

1. Coordinate application of components to provide optimum adhesion of resinous flooring system to substrate, and optimum intercoat adhesion.
2. Cure resinous flooring components according to manufacturer's written instructions. Prevent contamination during application and curing processes.
3. At substrate expansion and isolation joints, provide joint in resinous flooring to comply with resinous flooring manufacturer's written recommendations.

a. Apply joint sealant to comply with manufacturer's written recommendations.

B. Apply primer over prepared substrate at manufacturer's recommended spreading rate.

C. Apply waterproofing membrane, where indicated, in manufacturer's recommended thickness.

1. Apply waterproofing membrane to integral cove base substrates.

D. Apply reinforcing membrane to [**substrate cracks**] [**entire substrate surface**].

E. Integral Cove Base: Apply cove base mix to wall surfaces before applying flooring. Apply according to manufacturer's written instructions and details including those for taping, mixing, priming, troweling, sanding, and topcoating of cove base. Round internal and external corners.

F. Apply self-leveling slurry body coat(s) in thickness indicated for flooring system.

1. Broadcast aggregates and, after resin is cured, remove excess aggregates to provide surface texture indicated.

G. Apply troweled or screeded body coat(s) in thickness indicated for flooring system. Hand or power trowel and grout to fill voids. When cured, sand to remove trowel marks and roughness.

H. Apply grout coat, of type recommended by resinous flooring manufacturer to fill voids in surface of final body coat and to produce wearing surface indicated.

I. Apply topcoat(s) in number of coats indicated for flooring system and at spreading rates recommended in writing by manufacturer.

3.3 FIELD QUALITY CONTROL

A. Core Sampling: At the direction of Owner and at locations designated by Owner, take 1 core sample per 1000 sq. ft. (92.9 sq. m) of resinous flooring, or portion of, to verify thickness. For each sample that fails to comply with requirements, take two additional samples. Repair damage caused by coring and correct deficiencies.

B. Material Sampling: Owner may at any time and any number of times during resinous flooring application require material samples for testing for compliance with requirements.

1. Owner will engage an independent testing agency to take samples of materials being used. Material samples will be taken, identified, sealed, and certified in presence of Contractor.
2. Testing agency will test samples for compliance with requirements, using applicable referenced testing procedures or, if not referenced, using testing procedures listed in manufacturer's product data.
3. If test results show applied materials do not comply with specified requirements, pay for testing, remove noncomplying materials, prepare surfaces coated with unacceptable materials, and reapply flooring materials to comply with requirements.

3.4 CLEANING AND PROTECTING

A. Protect resinous flooring from damage and wear during the remainder of construction period. Use protective methods and materials, including temporary covering, recommended in writing by resinous flooring manufacturer.

END OF SECTION 09671

SECTION 09900
PAINTING

1. RELATED DOCUMENTS

The general provisions of the contract, including General and Special Conditions apply to the work specified in this section.

2. DESCRIPTION OF WORK

The extent of painting work is shown on the drawings and schedules, and as herein specified.

This work includes the painting and finishing of all interior and exterior exposed items and surfaces throughout the project, except as herein specified. Surface preparation, priming and coats of paint specified are in addition to shop priming and surface treatment specified under other sections, except as otherwise specified.

The work includes the field painting of all bare and covered pipes (including color coding), and of hangers, exposed steel and iron work, and primed metal surfaces of equipment installed under the mechanical and electrical work, except as otherwise specified.

The "paint" as used herein means all coating systems materials which includes primers, emulsions, enamels, sealers and fillers, and other applied materials whether used as prime, intermediate or finish coats.

Paint all exposed surfaces whether or not colors are designated in any "schedule", except where the natural finish of the material is obviously intended and specifically noted as a surface not to be painted. Where items or surfaces are not specifically mentioned, paint these same as adjacent similar materials or areas. If color or finish is not designated, the Architect will select these from standard colors available.

3. PAINTING NOT INCLUDED

The following categories of work are not included as part of the painter-applied finish work, or are included in other sections of these specifications, unless otherwise shown or specified.

Shop Priming

Unless otherwise specified, shop priming of ferrous metal-items is included under the various sections for structural steel, miscellaneous metal items, hollow metal work, and similar items. Also, for such fabricated components as architectural woodwork, wood casework, and shop fabricated or factory built mechanical and electrical equipment or accessories.

Pre-Finished Items

Unless otherwise indicated, do not include painting when factory finishing is specified for such items as (but not limited to) metal toilet enclosures, acoustic materials, architectural woodwork and casework, finished mechanical and electrical equipment including light fixtures, switchgear and distribution cabinets, doors and equipment.

Concealed Surfaces

Unless otherwise indicated, painting is not required on wall or ceiling surfaces in concealed areas and inaccessible areas, such as foundation spaces, furred areas, pipe spaces, duct shafts as applicable to this project.

Do not paint copper pipe, zinc-coated pipe and zinc-coated ducts under insulation. Do not paint zinc-coated and copper pipe in concealed spaces.

Finished Metal Surfaces

Metal surfaces of anodized aluminum, stainless steel, chromium plate, copper, bronze and similar finished materials will not require finish painting, except as otherwise specified.

Operating Parts and Labels

Do not paint any moving parts of operating units, mechanical and electrical parts, such as valve and damper operators, linkages, sinkages, sensing devices, motor and fan shafts, unless otherwise indicated.

Do not paint over any code-required labels, such as Underwriters Laboratories and Factory Mutual, or any equipment identification, performance rating, name, or nomenclature plates.

4. GENERAL

Site Conditions

Starting of painting work will be construed as the Applicator's acceptance of the surfaces within any particular area.

Do not paint over dirt, rust, scale, grease, moisture, scuffed surfaces, or conditions otherwise detrimental to the formation of a durable paint film.

Atmospheric Conditions

Exterior paint shall not be applied when the temperature of the surface is below 45 degrees Fahrenheit or above 95 degrees Fahrenheit unless otherwise directed. Interior paint may be applied at any time, provided the surfaces to be painted are dry and the temperature can be kept above 45 degrees Fahrenheit during the application of ordinary paints, and between 65 degrees Fahrenheit and 95 degrees Fahrenheit during the application of enamels and varnishes. Paint shall not be applied during foggy or rainy weather or when, in the opinion of the A/E the surfaces are not in proper condition for painting.

Delivery and Storage

Deliver all materials to the job site in original, new and unopened packages and containers bearing manufacturer's name and label, and application instructions thereon.

Protection

Protect work of other trades, whether to be painted or not, against damage by the painting and finishing work. Leave nil such work undamaged. Correct any damages by cleaning, repainting or replacing, and repainting, as directed by the A/E.

Provide “Wet Paint" signs as required to protect newly painted finishes. Remove temporary protective wrappings after completion of painting operations.

Clean Up

During the progress of the work, remove from the project all discarded paint materials, rubbish, cans and rags.

Upon completion of painting work, clean all paint spattered surfaces. Remove spattered paint by proper methods of washing and scraping, using care not to scratch or otherwise damage finished surfaces.

Colors

Prior to beginning work, the A/E will furnish a color schedule to the Contractor.

5- MATERIALS

In the following schedule, refer to "Guide to U.S. Government Paint Specifications", Federal Standards & Test Methods, (19th. Edition) for type and quality of finishes required. Best grade products of manufacturers may be used only when copy of the test made by an independent laboratory are submitted by the Contractor and approved by the A/E.

FEDERAL STANDARDS & TEST METHODS:

Exterior concrete and masonry TT-P-19c

Interior concrete and masonry TT-P-29J

Water repellent, colorless, silicone base SS-W-110C

Interior semi-gloss enamel TT-P-102E

Interior Wood Stain TT-S-711

Varnish, low sheen TT-V-85c

Primer for aluminum and galvanized metal surfaces …… TT-P-641G

Primer for ferrous metal surfaces TT-P-636D

Gloss enamel for metal surfaces TT-E-489G

Wainscot epoxy coating TT-C-535B

Linseed oil, turpentine, putty, ect ..... Best quality obtainable.

6- MATERIAL TESTING

The right is reserved by the A/E to engage the services of a testing laboratory to perform all the necessary tests to verify that the paint submitted for approval by the Contractor complies with the requirements of these specifications.

7- SURFACE PREPARATION

General

Perform all preparation and cleaning procedures in strict accordance with the paint manufacturer's instructions and as herein specified.

Remove all hardware, hardware accessories, machined surfaces, plates, lighting fixtures, and similar items in place and not to be finish painted, or provide stir face-applied protection prior to surface preparation and painting operations. Remove, if necessary, for the complete painting of the items and adjacent surfaces. Following completion of painting of each space or area, reinstall the removed items by workmen skilled in the trades involved.

Clean surfaces to be painted before applying paint or surface treatments. Remove oil and grease with clean cloths and cleaning solvents prior to mechanical cleaning. Provide cleaning solvents of low toxicity and a flash point in excess of 100°F. Program the cleaning and painting so that dust and other contaminants from the cleaning process will not fall in wet, newly painted surfaces.

Cementitious Materials

Prepare cementitious surfaces of concrete, concrete block, cement plaster and cement-asbestos board to be painted by removing all efflorescence, chalk, dust, dirt, grease, oils, and by roughening as required to remove glaze.

Determine the alkalinity and moisture content of the surfaces to be painted by performing appropriate tests. If the surfaces are found to be sufficiently alkaline to cause blistering and burning of the finish paint, correct this condition by sponging the affected surfaces with a zinc sulphate solution of 2 lbs. zinc sulphate per gal. of water, or other acceptable method, before application of paint. Do not paint over surfaces where the moisture content exceeds 8%, unless otherwise permitted in the manufacturer's printed directions.

Wood

Clean wood surfaces to be painted of all dirt, oil, or other foreign substances with scrapers, mineral spirits, and sandpaper, as required. Sandpaper smooth those finished surfaces exposed to view, and dust off.

Prime, stain, or seal wood required to be job painted immediately upon delivery to job. Prime edges, ends, face, undersides, and backsides of such wood, including cabinets, counters, cases, paneling, etc. Seal tops and bottoms of wood doors with a heavy coat of varnish or equivalent sealer immediately upon delivery to job.

Scrape and clean small, dry, seasoned knots and apply a thin coat of white shellac or other approved sealer, before application of the priming coat.

After priming, fill holes and imperfections in finish surfaces with putty or plastic wood filler. Sandpaper smooth when dried.

Ferrous Metals

Clean non-galvanized, ferrous surfaces that have not been shop-coated of all oil, grease, dirt, loose mill scale and other foreign substances by solvent or mechanical cleaning, complying with SSPC recommendations.

Touch-up all shop-applied prime coats which have damaged, or bare areas, where required by other sections of these specifications. Wirebrush, solvent clean, and touch up with the same primer as the shop coat.

8- MATERIALS PREPARATION

Mix and prepare painting materials in strict accordance with the manufacturer's directions.

Store materials not in actual use in tightly covered containers. Maintain containers used in storage, mixing, and application of paint in a clean condition, free of foreign materials and residue.

Stir all materials before application to produce a mixture of uniform density, and as required during the application of the materials. Do not stir any film which may form on the surfaces of materials into the material. Remove the film and, if necessary, strain the material before using.

9- APPLICATION

Apply paint by brush, roller or spray in accordance with the manufacturer's directions. Spray paint uniformly with suitable equipment.

The number of coats and paint film thickness required is the same regardless of the application method. Do not apply succeeding coats until the previous coat hag completely dried.

Apply additional coats when undercoats, stains, or other conditions show through the final coat of paint, until the paint film is of uniform finish, color and appearance.

"Exposed surfaces" shall mean areas visible when permanent of built in fixtures, grilles, etc., are in place in areas scheduled to be painted.

Paint the back sides of access panels, removable or hinged covers to match the exposed surfaces.

Finish exterior doors on tops, bottoms, and side edges the same as the exterior faces, unless otherwise indicated.

Sand lightly between each succeeding enamel or varnish coat.

Prime Coats

Before application of finish coats, apply a prime coat to material which is required to be painted or finished, and which has not been prime coated by others.

Recoat primed and sealed walls and ceilings where there is evidence of suction spots or unsealed areas in first coat, to assure a finish coat with no burn through or other defects due to insufficient sealing.

Mechanical Applications

Apply each roller coat to provide the equivalent hiding as brush-applied coats.

Use spray application (generally) on wire mesh and similar surfaces where hand brush work would be inferior.

Wherever spray application is used, apply each coat to provide the equivalent hiding of brush-app1ied coats. Do not double1back with spray equipment for the purpose of building up film thickness of 2 coats in one pass.

Completed Work

Match approved samples for color, texture and coverage. Remove, finish, or repaint work not in compliance with specified requirements.

10- SUBMITTALS

Manufacturer's Data

Submit 2 copies of manufacturer's specifications, including paint label analysis and application instructions for each material specified.

List each material and cross reference to the specific paint and finish system and application. Identify by manufacturer's catalog number and general classification. No painting work shall be done until this schedule has been finally approved.

Samples

On 12" x 12" hardboard, provide 2 samples of each color and material, with texture to simulate actual conditions. Resubmit each sample as requested until required sheen, color, and texture is achieved.

On actual wood surfaces, provide 2, 4" x 8" samples of each finish as required. Label and identify each as to location and application.

11- SURFACES TO BE PAINTED

The exact locations and limits of the surfaces requiring the various types of finishes shall be as established in the Color Schedule. The paint required for the various types of surfaces shall be as follows:

Exterior concrete, masonry or plastered surfaces, except as otherwise noted

Two (2) coats exterior concrete and masonry paint

Exterior exposed concrete surfaces, except as otherwise noted

Two (2) coats of water repellent finish

Interior concrete, masonry or plastered surfaces, except where indicated to receive an enamel finish

Two (2) coats interior concrete and masonry paint

Interior concrete, masonry or plastered surfaces indicated to received enamel finish

First coat - enamel undercoater as recommended by manufacturer

Second and third coats - Semi-gloss enamel

Interior woodwork (enamel finish)

First coat - enamel undercoater as recommended by the manufacturer

Second and third coats - Semi-gloss enamel

Interior woodwork (natural finish)

First coat - Stain if required

Second coat - Filler tinted to match stain if required by species of wood

Third and fourth coats - Semi-gloss varnish

Miscellaneous metal items which are specified under other sections to receive finishes as specified under this section or for which finishes are not specified under other sections

First coat - shop primed; or (1) coat of primer for galvanized or non-galvanized metal as the case may be

Second and third coats - gloss enamel

Wainscots indicated to receive polyurethane finish

Two (2) coats polyurethane paint

END OF SECTION

SECTION 09911 - EXTERIOR PAINTING

PART 1 - GENERAL

1.1 RELATED DOCUMENTS

A. Drawings and general provisions of the Contract, including General and Supplementary Conditions and Division 1 Specification Sections, apply to this Section.

1.2 SUMMARY

A. This Section includes surface preparation and the application of paint systems on the following exterior substrates:

1. Concrete.
2. Clay masonry.
3. Concrete masonry units (CMU).
4. Steel.
5. Galvanized metal.
6. Aluminum (not anodized or otherwise coated).
7. Wood.
8. Plastic trim fabrications.
9. Exterior portland cement (stucco).
10. Exterior gypsum board.

B. Related Sections include the following:

1. Division 5 Sections for shop priming of metal substrates with primers specified in this Section.
2. Division 6 Sections for shop priming carpentry with primers specified in this Section.
3. Division 8 Sections for factory priming windows and doors with primers specified in this Section.
4. Division 9 Section "Interior Painting" for surface preparation and the application of paint systems on interior substrates.
5. Division 9 Section "Wood Stains and Transparent Finishes" for surface preparation and the application of wood stains and transparent finishes on exterior wood substrates.
6. Division 9 painting Sections for special-use coatings.

1.3 SUBMITTALS

A. Product Data: For each type of product indicated.

B. Samples for Initial Selection: For each type of topcoat product indicated.

C. Samples for Verification: For each type of paint system and each color and gloss of topcoat indicated.

1. Submit Samples on rigid backing, 8 inches (200 mm) square.
2. Step coats on Samples to show each coat required for system.
3. Label each coat of each Sample.
4. Label each Sample for location and application area.

D. Product List: For each product indicated, include the following:

1. Cross-reference to paint system and locations of application areas. Use same designations indicated on Drawings and in schedules.
2. Printout of current "MPI Approved Products List" for each product category specified in Part 2, with the proposed product highlighted.

1.4 QUALITY ASSURANCE

A. MPI Standards:

1. Products: Complying with MPI standards indicated and listed in "MPI Approved Products List."
2. Preparation and Workmanship: Comply with requirements in "MPI Architectural Painting Specification Manual" for products and paint systems indicated.

B. Mockups: Apply benchmark samples of each paint system indicated and each color and finish selected to verify preliminary selections made under sample submittals and to demonstrate aesthetic effects and set quality standards for materials and execution.

1. Architect will select one surface to represent surfaces and conditions for application of each paint system specified in Part 3.

a. Vertical and Horizontal Surfaces: Provide samples of at least 100 sq. ft. (9 sq. m).
b. Other Items: Architect will designate items or areas required.

2. Final approval of color selections will be based on benchmark samples.

a. If preliminary color selections are not approved, apply additional benchmark samples of additional colors selected by Architect at no added cost to Owner.

1.5 DELIVERY, STORAGE, AND HANDLING

A. Store materials not in use in tightly covered containers in well-ventilated areas with ambient temperatures continuously maintained at not less than 45 deg F (7 deg C).

1. Maintain containers in clean condition, free of foreign materials and residue.
2. Remove rags and waste from storage areas daily.

1.6 PROJECT CONDITIONS

A. Apply paints only when temperature of surfaces to be painted and ambient air temperatures are between 50 and 95 deg F (10 and 35 deg C).

B. Do not apply paints in snow, rain, fog, or mist; when relative humidity exceeds 85 percent; at temperatures less than 5 deg F (3 deg C) above the dew point; or to damp or wet surfaces.

1.7 EXTRA MATERIALS

A. Furnish extra materials described below that are from same production run (batch mix) as materials applied and that are packaged for storage and identified with labels describing contents.

1. Quantity: Furnish an additional [**5**] <**Insert number**> percent, but not less than [**1 gal. (3.8 L)**] <**Insert number**> of each material and color applied.

PART 2 - PRODUCTS

2.1 MANUFACTURERS

A. Available Manufacturers: Subject to compliance with requirements, manufacturers offering products that may be incorporated into the Work include, but are not limited to, the following:

B. Manufacturers: Subject to compliance with requirements, provide products by one of the following:

1. Benjamin Moore & Co.
2. Benjamin Moore & Co., Limited (Canada).
3. Bennette Paint Mfg. Co., Inc.
4. BLP Mobile Paint Manufacturing.
5. California Paints.
6. ChemRex.
7. Cloverdale Paint.
8. Color Wheel Paints & Coatings.
9. Columbia Paint & Coatings.
10. Coronado Paint.
11. Davis Paint Company.
12. Del Technical Coatings.
13. Diamond Vogel Paints.
14. Dunn-Edwards Corporation.
15. Durant Paints Inc.
16. Duron, Inc.
17. Envirocoat Technologies Inc.
18. Farrell-Calhoun.
19. Flex Bon Paints.
20. Frazee Paint.
21. General Paint.
22. Griggs Paint.
23. Hallman Lindsay Quality Paints.
24. Hirshfield's, Inc.
25. ICI Devoe (Canada).
26. ICI Paints.

27. ICI Paints (Canada).
28. Insl-x.
29. Iowa Paint Manufacturing Company, Inc.
30. Kelly-Moore Paints.
31. Kryton Canada Corporation.
32. Kwal-Howells Paint.
33. M.A.B. Paints.
34. McCormick Paints.
35. Miller Paint.
36. Mills Paint.
37. NCP Coatings.
38. Northern Paint.
39. PARA Paints.
40. Parker Paint Mfg. Co. Inc.
41. Porter Paints.
42. PPG Architectural Finishes, Inc.
43. Rodda Paint Co.
44. Sherwin-Williams Company (The).
45. Sico, Inc.
46. Sigma Coatings.
47. Smiland Paint Company.
48. Spectra-Tone.
49. Tamms Industries, Inc.
50. Tower Paint.
51. Vista Paint.
52. <**Insert manufacturer's name.**>

2.2 PAINT, GENERAL

A. Material Compatibility:

1. Provide materials for use within each paint system that are compatible with one another and substrates indicated, under conditions of service and application as demonstrated by manufacturer, based on testing and field experience.
2. For each coat in a paint system, provide products recommended in writing by manufacturers of topcoat for use in paint system and on substrate indicated.

B. Colors: [**As selected by Architect from manufacturer's full range**] [**Match Architect's samples**] [**As indicated in a color schedule**] <**Insert requirements**>.

2.3 BLOCK FILLERS

A. Interior/Exterior Latex Block Filler: MPI #4.

1. VOC Content: E Range of [**E2**] [**E3**].

2.4 PRIMERS/SEALERS

A. Alkali-Resistant Primer: MPI #3.

1. VOC Content: E Range of [**E1**] [**E2**] [**E3**].

B. Bonding Primer (Water Based): MPI #17.

1. VOC Content: E Range of [**E1**] [**E2**] [**E3**].

C. Bonding Primer (Solvent Based): MPI #69.

1. VOC Content: E Range of [**E1**] [**E2**] [**E3**].

D. Wood-Knot Sealer: Sealer recommended in writing by topcoat manufacturer for use in paint system indicated.

2.5 METAL PRIMERS

A. Alkyd Anticorrosive Metal Primer: MPI #79.

1. VOC Content: E Range of [**E1**] [**E2**].

B. Quick-Drying Alkyd Metal Primer: MPI #76.

1. VOC Content: E Range of [**E1**] [**E2**] [**E3**].

C. Cementitious Galvanized-Metal Primer: MPI #26.

1. VOC Content: E Range of E1.

D. Waterborne Galvanized-Metal Primer: MPI #134.

1. VOC Content: E Range of [**E1**] [**E2**] [**E3**].
2. Environmental Performance Rating: [**EPR 1**] [**EPR 2**] [**EPR 3**].

E. Quick-Drying Primer for Aluminum: MPI #95.

1. VOC Content: E Range of [**E1**] [**E2**] [**E3**].

2.6 WOOD PRIMERS

A. Exterior Latex Wood Primer: MPI #6.

1. VOC Content: E Range of [**E1**] [**E2**] [**E3**].

B. Exterior Alkyd Wood Primer: MPI #5.

1. VOC Content: E Range of [**E2**] [**E3**].

C. Exterior Oil Wood Primer: MPI #7.

1. VOC Content: E Range of E2.

2.7 EXTERIOR LATEX PAINTS

A. Exterior Latex (Flat): MPI #10 (Gloss Level 1).

1. VOC Content: E Range of [**E1**] [**E2**] [**E3**].

B. Exterior Latex (Semigloss): MPI #11 (Gloss Level 5).

1. VOC Content: E Range of [**E1**] [**E2**] [**E3**].

C. Exterior Latex (Gloss): MPI #119 (Gloss Level 6, except minimum gloss of 65 units at 60 deg).

1. VOC Content: E Range of [**E1**] [**E2**] [**E3**].

2.8 EXTERIOR ALKYD PAINTS

A. Exterior Alkyd Enamel (Flat): MPI #8 (Gloss Level 1).

1. VOC Content: E Range of E1.

B. Exterior Alkyd Enamel (Semigloss): MPI #94 (Gloss Level 5).

1. VOC Content: E Range of [**E1**] [**E2**].

C. Exterior Alkyd Enamel (Gloss): MPI #9 (Gloss Level 6).

1. VOC Content: E Range of [**E1**] [**E2**].

2.9 QUICK-DRYING ENAMELS

A. Quick-Drying Enamel (Semigloss): MPI #81 (Gloss Level 5).

1. VOC Content: E Range of [**E1**] [**E2**] [**E3**].

B. Quick-Drying Enamel (High Gloss): MPI #96 (Gloss Level 7).

1. VOC Content: E Range of [**E1**] [**E2**] [**E3**].

2.10 TEXTURED AND HIGH-BUILD COATINGS

A. Latex Stucco and Masonry Textured Coating: MPI #42.

1. VOC Content: E Range of [**E2**] [**E3**].

B. High-Build Latex (Exterior): MPI #40.

1. VOC Content: E Range of [**E1**] [**E3**].

2.11 ALUMINUM PAINT

A. Aluminum Paint: MPI #1.

1. VOC Content: E Range of [**E1**] [**E2**] [**E3**].

2.12 FLOOR COATINGS

A. Interior/Exterior Clear Concrete Floor Sealer (Water Based): MPI #99.

1. VOC Content: E Range of [**E1**] [**E2**] [**E3**].

B. Interior/Exterior Clear Concrete Floor Sealer (Solvent Based): MPI #104.

1. VOC Content: E Range of [**E1**] [**E2**].

C. Interior/Exterior Latex Floor and Porch Paint (Low Gloss): MPI #60 (maximum Gloss Level 3).

1. VOC Content: E Range of [**E2**] [**E3**].
2. Environmental Performance Rating: EPR 3.

D. Exterior/Interior Alkyd Floor Enamel (Gloss): MPI #27 (Gloss Level 6).

1. VOC Content: E Range of [**E1**] [**E2**].
2. Additives: Manufacturer's standard additive to increase skid resistance of painted surface.

PART 3 - EXECUTION

3.1 EXAMINATION

A. Examine substrates and conditions, with Applicator present, for compliance with requirements for maximum moisture content and other conditions affecting performance of work.

B. Maximum Moisture Content of Substrates: When measured with an electronic moisture meter as follows:

1. Concrete: 12 percent.
2. Masonry (Clay and CMU): 12 percent.
3. Wood: 15 percent.
4. Plaster: 12 percent.
5. Gypsum Board: 12 percent.

C. Verify suitability of substrates, including surface conditions and compatibility with existing finishes and primers.

D. Begin coating application only after unsatisfactory conditions have been corrected and surfaces are dry.

1. Beginning coating application constitutes Contractor's acceptance of substrates and conditions.

3.2 PREPARATION

A. Comply with manufacturer's written instructions and recommendations in "MPI Architectural Painting Specification Manual" applicable to substrates and paint systems indicated.

B. Remove plates, machined surfaces, and similar items already in place that are not to be painted. If removal is impractical or impossible because of size or weight of item, provide surface-applied protection before surface preparation and painting.

1. After completing painting operations, use workers skilled in the trades involved to reinstall items that were removed. Remove surface-applied protection if any.
2. Do not paint over labels of independent testing agencies or equipment name, identification, performance rating, or nomenclature plates.

C. Clean substrates of substances that could impair bond of paints, including dirt, oil, grease, and incompatible paints and encapsulants.

1. Remove incompatible primers and reprime substrate with compatible primers as required to produce paint systems indicated.

D. Concrete Substrates: Remove release agents, curing compounds, efflorescence, and chalk. Do not paint surfaces if moisture content or alkalinity of surfaces to be painted exceeds that permitted in manufacturer's written instructions.

E. Clay Masonry Substrates: Remove efflorescence and chalk. Do not paint surfaces if moisture content of surfaces or alkalinity of mortar joints to be painted exceed that permitted in manufacturer's written instructions.

F. Concrete Masonry Substrates: Remove efflorescence and chalk. Do not paint surfaces if moisture content or alkalinity of surfaces to be painted exceeds that permitted in manufacturer's written instructions.

G. Steel Substrates: Remove rust and loose mill scale. Clean using methods recommended in writing by paint manufacturer.

H. Galvanized-Metal Substrates: Remove grease and oil residue from galvanized sheet metal fabricated from coil stock by mechanical methods to produce clean, lightly etched surfaces that promote adhesion of subsequently applied paints.

I. Aluminum Substrates: Remove surface oxidation.

J. Wood Substrates:

1. Scrape and clean knots, and apply coat of knot sealer before applying primer.
2. Sand surfaces that will be exposed to view, and dust off.
3. Prime edges, ends, faces, undersides, and backsides of wood.
4. After priming, fill holes and imperfections in the finish surfaces with putty or plastic wood filler. Sand smooth when dried.

K. Plastic Trim Fabrication Substrates: Remove dust, dirt, and other foreign material that might impair bond of paints to substrates.

L. Plaster Substrates: Do not begin paint application until plaster is fully cured and dry.

M. Exterior Gypsum Board Substrates: Do not begin paint application until finishing compound is dry and sanded smooth.

3.3 APPLICATION

A. Apply paints according to manufacturer's written instructions.

1. Use applicators and techniques suited for paint and substrate indicated.
2. Paint surfaces behind movable items same as similar exposed surfaces. Before final installation, paint surfaces behind permanently fixed items with prime coat only.

B. Tint each undercoat a lighter shade to facilitate identification of each coat if multiple coats of same material are to be applied. Tint undercoats to match color of topcoat, but provide sufficient difference in shade of undercoats to distinguish each separate coat.

C. If undercoats or other conditions show through topcoat, apply additional coats until cured film has a uniform paint finish, color, and appearance.

D. Apply paints to produce surface films without cloudiness, spotting, holidays, laps, brush marks, roller tracking, runs, sags, ropiness, or other surface imperfections. Cut in sharp lines and color breaks.

3.4 FIELD QUALITY CONTROL

A. Testing of Paint Materials: Owner reserves the right to invoke the following procedure at any time and as often as Owner deems necessary during the period when paints are being applied:

1. Owner will engage the services of a qualified testing agency to sample paint materials being used. Samples of material delivered to Project site will be taken, identified, sealed, and certified in presence of Contractor.
2. Testing agency will perform tests for compliance of paint materials with product requirements.
3. Owner may direct Contractor to stop applying paints if test results show materials being used do not comply with product requirements. Contractor shall remove noncomplying-paint materials from Project site, pay for testing, and repaint surfaces painted with rejected materials. Contractor will be required to remove rejected materials from previously painted surfaces if, on repainting with complying materials, the two paints are incompatible.

3.5 CLEANING AND PROTECTION

A. At end of each workday, remove rubbish, empty cans, rags, and other discarded materials from Project site.

B. After completing paint application, clean spattered surfaces. Remove spattered paints by washing, scraping, or other methods. Do not scratch or damage adjacent finished surfaces.

C. Protect work of other trades against damage from paint application. Correct damage to work of other trades by cleaning, repairing, replacing, and refinishing, as approved by Architect, and leave in an undamaged condition.

D. At completion of construction activities of other trades, touch up and restore damaged or defaced painted surfaces.

3.6 EXTERIOR PAINTING SCHEDULE

A. Concrete Substrates, Nontraffic Surfaces:

1. Latex System: MPI EXT 3.1A.

    a. Prime Coat: Exterior latex matching topcoat.
    b. Intermediate Coat: Exterior latex matching topcoat.
    c. Topcoat: Exterior latex [**(flat)**] [**(semigloss)**] [**(gloss)**].

2. Latex Aggregate/Latex System: MPI EXT 3.1 B.

    a. Prime Coat: Latex stucco and masonry textured coating.
    b. Intermediate Coat: Exterior latex matching topcoat.
    c. Topcoat: Exterior latex [**(flat)**] [**(semigloss)**] [**(gloss)**].

3. Latex Over Alkali-Resistant Primer System: MPI EXT 3.1K.

    a. Prime Coat: Alkali-resistant primer.
    b. Intermediate Coat: Exterior latex matching topcoat.
    c. Topcoat: Exterior latex [**(flat)**] [**(semigloss)**] [**(gloss)**].

4. High-Build Latex System: MPI EXT 3.1L, applied to form dry film thickness of not less than 10 mils (0.25 mm).

    a. Prime Coat: As recommended in writing by topcoat manufacturer.
    b. Intermediate Coat: As recommended in writing by topcoat manufacturer.
    c. Topcoat: High-build latex (exterior).

5. Latex Aggregate System: MPI EXT 3.1N.

    a. Prime Coat: As recommended in writing by topcoat manufacturer.
    b. Intermediate Coat: As recommended in writing by topcoat manufacturer.
    c. Topcoat: Latex stucco and masonry textured coating.

B. Concrete Substrates, Traffic Surfaces:

1. Latex Floor Paint System: MPI EXT 3.2A.

    a. Prime Coat: Interior/exterior latex floor and porch paint (low gloss).
    b. Intermediate Coat: Interior/exterior latex floor and porch paint (low gloss).
    c. Topcoat: Interior/exterior latex floor and porch paint (low gloss).

2. Alkyd Floor Enamel System: MPI EXT 3.2D.

    a. Prime Coat: Exterior/interior alkyd floor enamel (gloss).
    b. Intermediate Coat: Exterior/interior alkyd floor enamel (gloss).
    c. Topcoat: Exterior/interior alkyd floor enamel (gloss).

3. Clear Sealer System: MPI EXT 3.2G.

    a. Prime Coat: Interior/exterior clear concrete floor sealer (solvent based).
    b. Intermediate Coat: Interior/exterior clear concrete floor sealer (solvent based).
    c. Topcoat: Interior/exterior clear concrete floor sealer (solvent based).

4. Water-Based Clear Sealer System: MPI EXT 3.2H.

    a. Prime Coat: Interior/exterior clear concrete floor sealer (water based).
    b. Intermediate Coat: Interior/exterior clear concrete floor sealer (water based).
    c. Topcoat: Interior/exterior clear concrete floor sealer (water based).

C. Clay-Masonry Substrates:

1. Latex System: MPI EXT 4.1A.

    a. Prime Coat: Exterior latex matching topcoat.
    b. Intermediate Coat: Exterior latex matching topcoat.
    c. Topcoat: Exterior latex [**(flat)**] [**(semigloss)**] [**(gloss)**].

2. High-Build Latex System: MPI EXT 4.1H, applied to form dry film thickness of not less than 10 mils (0.25 mm).

    a. Prime Coat: As recommended in writing by topcoat manufacturer.
    b. Intermediate Coat: As recommended in writing by topcoat manufacturer.
    c. Topcoat: High-build latex (exterior).

3. Latex Aggregate System: MPI EXT 4.1B.

    a. Prime Coat: As recommended in writing by topcoat manufacturer.
    b. Intermediate Coat: As recommended in writing by topcoat manufacturer.
    c. Topcoat: Latex stucco and masonry textured coating.

D. CMU Substrates:

1. Latex System: MPI EXT 4.2A.

    a. Prime Coat: Interior/exterior latex block filler.
    b. Intermediate Coat: Exterior latex matching topcoat.
    c. Topcoat: Exterior latex [**(flat)**] [**(semigloss)**] [**(gloss)**].

2. Latex Over Alkali-Resistant Primer System: MPI EXT 4.2L.

    a. Prime Coat: Alkali-resistant primer.
    b. Intermediate Coat: Exterior latex matching topcoat.
    c. Topcoat: Exterior latex [**(flat)**] [**(semigloss)**] [**(gloss)**].

3. High-Build Latex System: MPI EXT 4.2K, applied to form dry film thickness of not less than 10 mils (0.25 mm).

    a. Prime Coat: As recommended in writing by topcoat manufacturer.
    b. Intermediate Coat: As recommended in writing by topcoat manufacturer.
    c. Topcoat: High-build latex (exterior).

4. Latex Aggregate System: MPI EXT 4.2B.

    a. Prime Coat: As recommended in writing by topcoat manufacturer.
    b. Intermediate Coat: As recommended in writing by topcoat manufacturer.
    c. Topcoat: Latex stucco and masonry textured coating.

E. Steel Substrates:

1. Quick-Drying Enamel System: MPI EXT 5.1A.

    a. Prime Coat: Quick-drying alkyd metal primer.
    b. Intermediate Coat: Quick-drying enamel matching topcoat.
    c. Topcoat: Quick-drying enamel [**(semigloss)**] [**(high gloss)**].

2. Alkyd System: MPI EXT 5.1D.

    a. Prime Coat: Alkyd anticorrosive metal primer.
    b. Intermediate Coat: Exterior alkyd enamel matching topcoat.
    c. Topcoat: Exterior alkyd enamel [**(flat)**] [**(semigloss)**] [**(gloss)**].

3. Aluminum Paint System: MPI EXT 5.1K.

    a. Prime Coat: Alkyd anticorrosive metal primer.
    b. Intermediate Coat: Aluminum paint.
    c. Topcoat: Aluminum paint.

F. Galvanized-Metal Substrates:

1. Latex System: MPI EXT 5.3A.

    a. Prime Coat: Cementitious galvanized-metal primer.
    b. Intermediate Coat: Exterior latex matching topcoat.
    c. Topcoat: Exterior latex [**(flat)**] [**(semigloss)**] [**(gloss)**].

2. Latex Over Water-Based Primer System: MPI EXT 5.3H.

    a. Prime Coat: Waterborne galvanized-metal primer.
    b. Intermediate Coat: Exterior latex matching topcoat.
    c. Topcoat: Exterior latex [**(flat)**] [**(semigloss)**] [**(gloss)**].

3. Alkyd System: MPI EXT 5.3B.

    a. Prime Coat: Cementitious galvanized-metal primer.
    b. Intermediate Coat: Exterior alkyd enamel matching topcoat.
    c. Topcoat: Exterior alkyd enamel [**(flat)**] [**(semigloss)**] [**(gloss)**].

G. Aluminum Substrates:

1. Latex System: MPI EXT 5.4H.

    a. Prime Coat: Quick-drying primer for aluminum.
    b. Intermediate Coat: Exterior latex matching topcoat.
    c. Topcoat: Exterior latex [**(flat)**] [**(semigloss)**] [**(gloss)**].

2. Alkyd System: MPI EXT 5.4F.

    a. Prime Coat: Quick-drying primer for aluminum.
    b. Intermediate Coat: Exterior alkyd enamel matching topcoat.
    c. Topcoat: Exterior alkyd enamel [**(flat)**] [**(semigloss)**] [**(gloss)**].

H. Glue-Laminated Beam and Column Substrates:

1. Latex System: MPI EXT 6.1L.

    a. Prime Coat: Exterior latex wood primer.
    b. Intermediate Coat: Exterior latex matching topcoat.
    c. Topcoat: Exterior latex [**(flat)**] [**(semigloss)**] [**(gloss)**].

2. Latex Over Alkyd Primer System: MPI EXT 6.1A.

    a. Prime Coat: Exterior [**alkyd**] [**oil**] wood primer.
    b. Intermediate Coat: Exterior latex matching topcoat.
    c. Topcoat: Exterior latex [**(flat)**] [**(semigloss)**] [**(gloss)**].

3. Alkyd System: MPI EXT 6.1B.

    a. Prime Coat: Exterior [**alkyd**] [**oil**] wood primer.
    b. Intermediate Coat: Exterior alkyd enamel matching topcoat.
    c. Topcoat: Exterior alkyd enamel [**(flat)**] [**(semigloss)**] [**(gloss)**].

I. Dressed Lumber Substrates: Including [**architectural woodwork**] [**doors**] <**Insert description**>.

1. Latex System: MPI EXT 6.3L.

    a. Prime Coat: Exterior latex wood primer.
    b. Intermediate Coat: Exterior latex matching topcoat.
    c. Topcoat: Exterior latex [**(flat)**] [**(semigloss)**] [**(gloss)**].

2. Latex Over Alkyd Primer System: MPI EXT 6.3A.

    a. Prime Coat: Exterior [**alkyd**] [**oil**] wood primer.

b. Intermediate Coat: Exterior latex matching topcoat.
c. Topcoat: Exterior latex [**(flat)**] [**(semigloss)**] [**(gloss)**].

3. Alkyd System: MPI EXT 6.3B.

a. Prime Coat: Exterior [**alkyd**] [**oil**] wood primer.
b. Intermediate Coat: Exterior alkyd enamel matching topcoat.
c. Topcoat: Exterior alkyd enamel [**(flat)**] [**(semigloss)**] [**(gloss)**].

J. Wood Panel Substrates: Including [**plywood siding**] [**fascias**] [**soffits**] <**Insert description**>.

1. Latex System: MPI EXT 6.4K.

a. Prime Coat: Exterior latex wood primer.
b. Intermediate Coat: Exterior latex matching topcoat.
c. Topcoat: Exterior latex [**(flat)**] [**(semigloss)**] [**(gloss)**].

2. Latex Over Alkyd Primer System: MPI EXT 6.4G.

a. Prime Coat: Exterior alkyd wood primer.
b. Intermediate Coat: Exterior latex matching topcoat.
c. Topcoat: Exterior latex [**(flat)**] [**(semigloss)**] [**(gloss)**].

3. Alkyd System: MPI EXT 6.4B.

a. Prime Coat: Exterior [**alkyd**] [**oil**] wood primer.
b. Intermediate Coat: Exterior alkyd enamel matching topcoat.
c. Topcoat: Exterior alkyd enamel [**(flat)**] [**(semigloss)**] [**(gloss)**].

K. Wood Shingle and Shake Substrates (Excluding Roofs):

1. Latex System: MPI EXT 6.6E.

a. Prime Coat: Exterior latex wood primer.
b. Intermediate Coat: Exterior latex matching topcoat.
c. Topcoat: Exterior latex [**(flat)**] [**(semigloss)**] [**(gloss)**].

2. Latex Over Alkyd Primer System: MPI EXT 6.6A.

a. Prime Coat: Exterior [**alkyd**] [**oil**] wood primer.
b. Intermediate Coat: Exterior latex matching topcoat.
c. Topcoat: Exterior latex [**(flat)**] [**(semigloss)**] [**(gloss)**].

3. Alkyd System: MPI EXT 6.6B.

a. Prime Coat: Exterior [**alkyd**] [**oil**] wood primer.
b. Intermediate Coat: Exterior alkyd enamel matching topcoat.
c. Topcoat: Exterior alkyd enamel [**(flat)**] [**(semigloss)**] [**(gloss)**].

L. Dimension Lumber Substrates, Nontraffic Surfaces: Including [**board siding**] [**fencing**] [**undersides of decking**] <**Insert description**>.

1. Latex System: MPI EXT 6.2M.

    a. Prime Coat: Exterior latex wood primer.
    b. Intermediate Coat: Exterior latex matching topcoat.
    c. Topcoat: Exterior latex [**(flat)**] [**(semigloss)**] [**(gloss)**].

2. Latex Over Alkyd Primer System: MPI EXT 6.2A.

    a. Prime Coat: Exterior [**alkyd**] [**oil**] wood primer.
    b. Intermediate Coat: Exterior latex matching topcoat.
    c. Topcoat: Exterior latex [**(flat)**] [**(semigloss)**] [**(gloss)**].

3. Alkyd System: MPI EXT 6.2C.

    a. Prime Coat: Exterior [**alkyd**] [**oil**] wood primer.
    b. Intermediate Coat: Exterior alkyd enamel matching topcoat.
    c. Topcoat: Exterior alkyd enamel [**(flat)**] [**(semigloss)**] [**(gloss)**].

M. Dimension Lumber Substrates, Traffic Surfaces: Including [**lumber decking**] [**stairs**] <**Insert description**>.

1. Latex System: MPI EXT 6.5E.

    a. Prime Coat: Exterior latex wood primer.
    b. Intermediate Coat: Interior/exterior latex floor and porch (low gloss).
    c. Topcoat: Interior/exterior latex floor and porch (low gloss).

        1) With additive to increase skid resistance of painted surface.

2. Latex Over Alkyd Primer System: MPI EXT 6.5A.

    a. Prime Coat: Exterior alkyd wood primer.
    b. Intermediate Coat: Interior/exterior latex floor and porch (low gloss).
    c. Topcoat: Interior/exterior latex floor and porch (low gloss).

        1) With additive to increase skid resistance of painted surface.

3. Alkyd Floor Enamel System: MPI EXT 6.5B.

    a. Prime Coat: Exterior/interior alkyd floor enamel (gloss).
    b. Intermediate Coat: Exterior/interior alkyd floor enamel (gloss).
    c. Topcoat: Exterior/interior alkyd floor enamel (gloss).

        1) With additive to increase skid resistance of painted surface.

N. Plastic Trim Fabrication Substrates:

1. Latex System: MPI EXT 6.8A.

    a. Prime Coat: Bonding primer [**(water based)**] [**(solvent based)**].
    b. Intermediate Coat: Exterior latex matching topcoat.
    c. Topcoat: Exterior latex [**(flat)**] [**(semigloss)**] [**(gloss)**].

2. Alkyd System: MPI EXT 6.8B.

    a. Prime Coat: Bonding primer [**(water based)**] [**(solvent based)**].
    b. Intermediate Coat: Exterior alkyd enamel matching topcoat.
    c. Topcoat: Exterior alkyd enamel [**(flat)**] [**(semigloss)**] [**(gloss)**].

O. Stucco Substrates:

1. Latex System: MPI EXT 9.1A.

    a. Prime Coat: Exterior latex matching topcoat.
    b. Intermediate Coat: Exterior latex matching topcoat.
    c. Topcoat: Exterior latex [**(flat)**] [**(semigloss)**] [**(gloss)**].

2. Latex Over Alkali-Resistant Primer System: MPI EXT 9.1J.

    a. Prime Coat: Alkali-resistant primer.
    b. Intermediate Coat: Exterior latex matching topcoat.
    c. Topcoat: Exterior latex [**(flat)**] [**(semigloss)**] [**(gloss)**].

3. High-Build Latex System: MPI EXT 9.1H, applied to form dry film thickness of not less than 10 mils (0.25 mm).

    a. Prime Coat: As recommended in writing by topcoat manufacturer.
    b. Intermediate Coat: As recommended in writing by topcoat manufacturer.
    c. Topcoat: High-build latex (exterior).

P. Exterior Gypsum Board Substrates:

1. Latex System: MPI EXT 9.2A.

    a. Prime Coat: Exterior latex matching topcoat.
    b. Intermediate Coat: Exterior latex matching topcoat.
    c. Topcoat: Exterior latex [**(flat)**] [**(semigloss)**] [**(gloss)**].

END OF SECTION 09911

SECTION 09912 - INTERIOR PAINTING

PART 1 - GENERAL

1.1 RELATED DOCUMENTS

A. Drawings and general provisions of the Contract, including General and Supplementary Conditions and Division 1 Specification Sections, apply to this Section.

1.2 SUMMARY

A. This Section includes surface preparation and the application of paint systems on the following interior substrates:

1. Concrete.
2. Clay masonry.
3. Concrete masonry units (CMU).
4. Steel.
5. Galvanized metal.
6. Aluminum (not anodized or otherwise coated).
7. Wood.
8. Gypsum board.
9. Plaster.
10. Spray-textured ceilings.
11. Cotton or canvas insulation covering.

B. Related Sections include the following:

1. Division 1 Section "LEED Requirements" for additional LEED requirements.
2. Division 5 Sections for shop priming of metal substrates with primers specified in this Section.
3. Division 6 Sections for shop priming carpentry with primers specified in this Section.
4. Division 8 Sections for factory priming windows and doors with primers specified in this Section.
5. Division 9 Section "Exterior Painting" for surface preparation and the application of paint systems on exterior substrates.
6. Division 9 Section "Wood Stains and Transparent Finishes" for surface preparation and the application of wood stains and transparent finishes on interior wood substrates.
7. Division 9 painting Sections for special-use coatings.

1.3 SUBMITTALS

A. Product Data: For each type of product indicated.

B. Samples for Initial Selection: For each type of topcoat product indicated.

C. Samples for Verification: For each type of paint system and in each color and gloss of topcoat indicated.

1. Submit Samples on rigid backing, 8 inches (200 mm) square.
2. Step coats on Samples to show each coat required for system.
3. Label each coat of each Sample.
4. Label each Sample for location and application area.

D. Product List: For each product indicated, include the following:

1. Cross-reference to paint system and locations of application areas. Use same designations indicated on Drawings and in schedules.
2. Printout of current "MPI Approved Products List" for each product category specified in Part 2, with the proposed product highlighted.

E. LEED Submittals: For Credit EQ 4.2, manufacturers' product data for paints, including printed statement of VOC content and chemical components.

1.4 QUALITY ASSURANCE

A. MPI Standards:

1. Products: Complying with MPI standards indicated and listed in "MPI Approved Products List."
2. Preparation and Workmanship: Comply with requirements in "MPI Architectural Painting Specification Manual" for products and paint systems indicated.

B. Mockups: Apply benchmark samples of each paint system indicated and each color and finish selected to verify preliminary selections made under sample submittals and to demonstrate aesthetic effects and set quality standards for materials and execution.

1. Architect will select one surface to represent surfaces and conditions for application of each paint system specified in Part 3.

a. Wall and Ceiling Surfaces: Provide samples of at least 100 sq. ft. (9 sq. m).
b. Other Items: Architect will designate items or areas required.

2. Apply benchmark samples after permanent lighting and other environmental services have been activated.
3. Final approval of color selections will be based on benchmark samples.

a. If preliminary color selections are not approved, apply additional benchmark samples of additional colors selected by Architect at no added cost to Owner.

1.5 DELIVERY, STORAGE, AND HANDLING

A. Store materials not in use in tightly covered containers in well-ventilated areas with ambient temperatures continuously maintained at not less than 45 deg F (7 deg C).

1. Maintain containers in clean condition, free of foreign materials and residue.

2. Remove rags and waste from storage areas daily.

1.6 PROJECT CONDITIONS

A. Apply paints only when temperature of surfaces to be painted and ambient air temperatures are between 50 and 95 deg F (10 and 35 deg C).

B. Do not apply paints when relative humidity exceeds 85 percent; at temperatures less than 5 deg F (3 deg C) above the dew point; or to damp or wet surfaces.

1.7 EXTRA MATERIALS

A. Furnish extra materials described below that are from same production run (batch mix) as materials applied and that are packaged for storage and identified with labels describing contents.

1. Quantity: Furnish an additional [**5**] <**Insert number**> percent, but not less than [**1 gal. (3.8 L)**] <**Insert number**> of each material and color applied.

PART 2 - PRODUCTS

2.1 MANUFACTURERS

A. Available Manufacturers: Subject to compliance with requirements, manufacturers offering products that may be incorporated into the Work include, but are not limited to, the following:

B. Manufacturers: Subject to compliance with requirements, provide products by one of the following:

1. Benjamin Moore & Co.
2. Benjamin Moore & Co., Limited (Canada).
3. Bennette Paint Mfg. Co., Inc.
4. BLP Mobile Paint Manufacturing.
5. California Paints.
6. ChemRex.
7. Cloverdale Paint.
8. Color Wheel Paints & Coatings.
9. Columbia Paint & Coatings.
10. Coronado Paint.
11. Davis Paint Company.
12. Diamond Vogel Paints.
13. Dunn-Edwards Corporation.
14. Durant Paints Inc.
15. Duron, Inc.
16. Envirocoat Technologies Inc.
17. Farrell-Calhoun.
18. Flex Bon Paints.

19. Frazee Paint.
20. General Paint.
21. Griggs Paint.
22. Hallman Lindsay Quality Paints.
23. Hirshfield's, Inc.
24. ICI Devoe (Canada).
25. ICI Paints.
26. ICI Paints (Canada).
27. Insl-x.
28. Iowa Paint Manufacturing Company, Inc.
29. Kelly-Moore Paints.
30. Kryton Canada Corporation.
31. Kwal-Howells Paint.
32. M.A.B. Paints.
33. McCormick Paints.
34. Miller Paint.
35. Mills Paint.
36. Northern Paint.
37. PARA Paints.
38. Parker Paint Mfg. Co. Inc.
39. Porter Paints.
40. PPG Architectural Finishes, Inc.
41. Rodda Paint Co.
42. Sherwin-Williams Company (The).
43. Sico, Inc.
44. Sigma Coatings.
45. Smiland Paint Company.
46. Spectra-Tone.
47. Sterling Paint.
48. Tamms Industries, Inc.
49. Tower Paint.
50. Vista Paint.
51. <**Insert manufacturer's name.**>

2.2 PAINT, GENERAL

A. Material Compatibility:

1. Provide materials for use within each paint system that are compatible with one another and substrates indicated, under conditions of service and application as demonstrated by manufacturer, based on testing and field experience.
2. For each coat in a paint system, provide products recommended in writing by manufacturers of topcoat for use in paint system and on substrate indicated.

B. Chemical Components of Field-Applied Interior Paints and Coatings: Provide products that comply with the following limits for VOC content, exclusive of colorants added to a tint base, when calculated according to 40 CFR 59, Subpart D (EPA Method 24) and the following chemical restrictions; these requirements do not apply to primers or finishes that are applied in a fabrication or finishing shop:

1. Flat Paints and Coatings: VOC content of not more than 50 g/L.
2. Nonflat Paints and Coatings: VOC content of not more than 150 g/L.
3. Aromatic Compounds: Paints and coatings shall not contain more than 1.0 percent by weight of total aromatic compounds (hydrocarbon compounds containing one or more benzene rings).
4. Restricted Components: Paints and coatings shall not contain any of the following:

    a. Acrolein.
    b. Acrylonitrile.
    c. Antimony.
    d. Benzene.
    e. Butyl benzyl phthalate.
    f. Cadmium.
    g. Di (2-ethylhexyl) phthalate.
    h. Di-n-butyl phthalate.
    i. Di-n-octyl phthalate.
    j. 1,2-dichlorobenzene.
    k. Diethyl phthalate.
    l. Dimethyl phthalate.
    m. Ethylbenzene.
    n. Formaldehyde.
    o. Hexavalent chromium.
    p. Isophorone.
    q. Lead.
    r. Mercury.
    s. Methyl ethyl ketone.
    t. Methyl isobutyl ketone.
    u. Methylene chloride.
    v. Naphthalene.
    w. Toluene (methylbenzene).
    x. 1,1,1-trichloroethane.
    y. Vinyl chloride.

C. Colors: [**As selected by Architect from manufacturer's full range**] [**Match Architect's samples**] [**As indicated in a color schedule**] <**Insert requirements**>.

2.3 BLOCK FILLERS

A. Interior/Exterior Latex Block Filler: MPI #4.

1. VOC Content: E Range of [**E2**] [**E3**].

2.4 PRIMERS/SEALERS

A. Interior Latex Primer/Sealer: MPI #50.

1. VOC Content: E Range of [**E1**] [**E2**] [**E3**].
2. Environmental Performance Rating: [**EPR 1**] [**EPR 2**] [**EPR 3**].

B. Interior Alkyd Primer/Sealer: MPI #45.

1. VOC Content: E Range of [**E1**] [**E2**].

C. Wood-Knot Sealer: Sealer recommended in writing by topcoat manufacturer for use in paint systems indicated.

2.5 METAL PRIMERS

A. Alkyd Anticorrosive Metal Primer: MPI #79.

1. VOC Content: E Range of [**E1**] [**E2**].

B. Quick-Drying Alkyd Metal Primer: MPI #76.

1. VOC Content: E Range of [**E1**] [**E2**] [**E3**].

C. Rust-Inhibitive Primer (Water Based): MPI #107.

1. VOC Content: E Range of [**E1**] [**E2**] [**E3**].
2. Environmental Performance Rating: [**EPR 1**] [**EPR 2**] [**EPR 3**].

D. Cementitious Galvanized-Metal Primer: MPI #26.

1. VOC Content: E Range of E1.

E. Waterborne Galvanized-Metal Primer: MPI #134.

1. VOC Content: E Range of [**E1**] [**E2**] [**E3**].
2. Environmental Performance Rating: [**EPR 1**] [**EPR 2**] [**EPR 3**].

F. Vinyl Wash Primer: MPI #80.

1. VOC Content: E Range of [**E2**] [**E3**].

G. Quick-Drying Primer for Aluminum: MPI #95.

1. VOC Content: E Range of [**E1**] [**E2**] [**E3**].

2.6 WOOD PRIMERS

A. Interior Latex-Based Wood Primer: MPI #39.

1. VOC Content: E Range of [**E1**] [**E2**] [**E3**].
2. Environmental Performance Rating: [**EPR 1**] [**EPR 2**] [**EPR 3**].

2.7 LATEX PAINTS

A. Interior Latex (Flat): MPI #53 (Gloss Level 1).

1. VOC Content: E Range of [**E1**] [**E2**] [**E3**].
2. Environmental Performance Rating: [**EPR 0.5**] [**EPR 1.5**] [**EPR 2.5**].

B. Interior Latex (Low Sheen): MPI #44 (Gloss Level 2).

1. VOC Content: E Range of [**E1**] [**E2**] [**E3**].
2. Environmental Performance Rating: [**EPR 1**] [**EPR 2**] [**EPR 3**].

C. Interior Latex (Eggshell): MPI #52 (Gloss Level 3).

1. VOC Content: E Range of [**E1**] [**E2**] [**E3**].
2. Environmental Performance Rating: [**EPR 1**] [**EPR 2**] [**EPR 3**].

D. Interior Latex (Satin): MPI #43 (Gloss Level 4).

1. VOC Content: E Range of [**E1**] [**E2**] [**E3**].
2. Environmental Performance Rating: [**EPR 1.5**] [**EPR 2**] [**EPR 2.5**] [**EPR 3.5**].

E. Interior Latex (Semigloss): MPI #54 (Gloss Level 5).

1. VOC Content: E Range of [**E1**] [**E2**] [**E3**].
2. Environmental Performance Rating: [**EPR 2**] [**EPR 3**] [**EPR 4**].

F. Interior Latex (Gloss): MPI #114 (Gloss Level 6, except minimum gloss of 65 units at 60 deg).

1. VOC Content: E Range of [**E1**] [**E2**] [**E3**].
2. Environmental Performance Rating: [**EPR 2**] [**EPR 3**] [**EPR 4**].

G. Institutional Low-Odor/VOC Latex (Flat): MPI #143 (Gloss Level 1).

1. VOC Content: E Range of E3.
2. Environmental Performance Rating: [**EPR 4**] [**EPR 5.5**].

H. Institutional Low-Odor/VOC Latex (Low Sheen): MPI #144 (Gloss Level 2).

1. VOC Content: E Range of E3.
2. Environmental Performance Rating: EPR 4.5.

I. Institutional Low-Odor/VOC Latex (Eggshell): MPI #145 (Gloss Level 3).

1. VOC Content: E Range of E3.
2. Environmental Performance Rating: EPR 4.5.

J. Institutional Low-Odor/VOC Latex (Semigloss): MPI #147 (Gloss Level 5).

1. VOC Content: E Range of E3.
2. Environmental Performance Rating: [**EPR 3**] [**EPR 5.5**].

K. High-Performance Architectural Latex (Low Sheen): MPI #138 (Gloss Level 2).

1. VOC Content: E Range of [**E1**] [**E2**] [**E3**].
2. Environmental Performance Rating: [**EPR 4**] [**EPR 5**] [**EPR 6**].

L. High-Performance Architectural Latex (Eggshell): MPI #139 (Gloss Level 3).

1. VOC Content: E Range of [**E2**] [**E3**].
2. Environmental Performance Rating: [**EPR 5**] [**EPR 6**].

M. High-Performance Architectural Latex (Satin): MPI #140 (Gloss Level 4).

1. VOC Content: E Range of [**E1**] [**E3**].
2. Environmental Performance Rating: [**EPR 4.5**] [**EPR 6.5**].

N. High-Performance Architectural Latex (Semigloss): MPI #141 (Gloss Level 5).

1. VOC Content: E Range of [**E1**] [**E2**] [**E3**].
2. Environmental Performance Rating: [**EPR 5**] [**EPR 6**] [**EPR 7**].

O. Exterior Latex (Flat): MPI #10 (Gloss Level 1).

1. VOC Content: E Range of [**E1**] [**E2**] [**E3**].

P. Exterior Latex (Semigloss): MPI #11 (Gloss Level 5).

1. VOC Content: E Range of [**E1**] [**E2**] [**E3**].

Q. Exterior Latex (Gloss): MPI #119 (Gloss Level 6, except minimum gloss of 65 units at 60 deg).

1. VOC Content: E Range of [**E1**] [**E2**] [**E3**].

2.8 ALKYD PAINTS

A. Interior Alkyd (Flat): MPI #49 (Gloss Level 1).

1. VOC Content: E Range of [**E1**] [**E2**] [**E3**].

B. Interior Alkyd (Eggshell): MPI #51 (Gloss Level 3).

1. VOC Content: E Range of [**E1**] [**E2**].

C. Interior Alkyd (Semigloss): MPI #47 (Gloss Level 5).

1. VOC Content: E Range of [**E1**] [**E2**].
2. Environmental Performance Rating: [**EPR 1**] [**EPR 2**] [**EPR 3**].

D. Interior Alkyd (Gloss): MPI #48 (Gloss Level 6).

1. VOC Content: E Range of [**E1**] [**E2**].

2.9 QUICK-DRYING ENAMELS

A. Quick-Drying Enamel (Semigloss): MPI #81 (Gloss Level 5).

1. VOC Content: E Range of [**E1**] [**E2**] [**E3**].

B. Quick-Drying Enamel (High Gloss): MPI #96 (Gloss Level 7).

1. VOC Content: E Range of [**E1**] [**E2**] [**E3**].

2.10 TEXTURED COATING

A. Latex Stucco and Masonry Textured Coating: MPI #42.

1. VOC Content: E Range of [**E2**] [**E3**].

2.11 DRY FOG/FALL COATINGS

A. Latex Dry Fog/Fall: MPI #118.

1. VOC Content: E Range of [**E1**] [**E2**] [**E3**].
2. Environmental Performance Rating: [**EPR 1**] [**EPR 2**] [**EPR 3**].

B. Waterborne Dry Fall: MPI #133.

1. VOC Content: E Range of [**E1**] [**E2**] [**E3**].
2. Environmental Performance Rating: [**EPR 1**] [**EPR 2**] [**EPR 3**].

C. Interior Alkyd Dry Fog/Fall: MPI #55.

1. VOC Content: E Range of [**E1**] [**E2**] [**E3**].

2.12 ALUMINUM PAINT

A. Aluminum Paint: MPI #1.

1. VOC Content: E Range of [**E1**] [**E2**] [**E3**].

2.13 FLOOR COATINGS

A. Interior Concrete Floor Stain: MPI #58.

1. VOC Content: E Range of [**E1**] [**E2**] [**E3**].
2. Environmental Performance Rating: EPR 2.

B. Interior/Exterior Clear Concrete Floor Sealer (Water Based): MPI #99.

1. VOC Content: E Range of [**E1**] [**E2**] [**E3**].

C. Interior/Exterior Clear Concrete Floor Sealer (Solvent Based): MPI #104.

1. VOC Content: E Range of [**E1**] [**E2**].

D. Interior/Exterior Latex Floor and Porch Paint (Low Gloss): MPI #60 (maximum Gloss Level 3).

1. VOC Content: E Range of [**E2**] [**E3**].
2. Environmental Performance Rating: EPR 3.

E. Exterior/Interior Alkyd Floor Enamel (Gloss): MPI #27 (Gloss Level 6).

1. VOC Content: E Range of [**E1**] [**E2**].
2. Additives: Manufacturer's standard additive to increase skid resistance of painted surface.

PART 3 - EXECUTION

3.1 EXAMINATION

A. Examine substrates and conditions, with Applicator present, for compliance with requirements for maximum moisture content and other conditions affecting performance of work.

B. Maximum Moisture Content of Substrates: When measured with an electronic moisture meter as follows:

1. Concrete: 12 percent.
2. Masonry (Clay and CMU): 12 percent.
3. Wood: 15 percent.
4. Gypsum Board: 12 percent.
5. Plaster: 12 percent.

C. Verify suitability of substrates, including surface conditions and compatibility with existing finishes and primers.

D. Begin coating application only after unsatisfactory conditions have been corrected and surfaces are dry.

1. Beginning coating application constitutes Contractor's acceptance of substrates and conditions.

3.2 PREPARATION

A. Comply with manufacturer's written instructions and recommendations in "MPI Architectural Painting Specification Manual" applicable to substrates indicated.

B. Remove plates, machined surfaces, and similar items already in place that are not to be painted. If removal is impractical or impossible because of size or weight of item, provide surface-applied protection before surface preparation and painting.

1. After completing painting operations, use workers skilled in the trades involved to reinstall items that were removed. Remove surface-applied protection if any.

2. Do not paint over labels of independent testing agencies or equipment name, identification, performance rating, or nomenclature plates.

C. Clean substrates of substances that could impair bond of paints, including dirt, oil, grease, and incompatible paints and encapsulants.

1. Remove incompatible primers and reprime substrate with compatible primers as required to produce paint systems indicated.

D. Concrete Substrates: Remove release agents, curing compounds, efflorescence, and chalk. Do not paint surfaces if moisture content or alkalinity of surfaces to be painted exceeds that permitted in manufacturer's written instructions.

E. Clay Masonry Substrates: Remove efflorescence and chalk. Do not paint surfaces if moisture content of surfaces or alkalinity of mortar joints to be painted exceed that permitted in manufacturer's written instructions.

F. Concrete Masonry Substrates: Remove efflorescence and chalk. Do not paint surfaces if moisture content or alkalinity of surfaces to be painted exceeds that permitted in manufacturer's written instructions.

G. Steel Substrates: Remove rust and loose mill scale. Clean using methods recommended in writing by paint manufacturer.

H. Galvanized-Metal Substrates: Remove grease and oil residue from galvanized sheet metal fabricated from coil stock by mechanical methods to produce clean, lightly etched surfaces that promote adhesion of subsequently applied paints.

I. Aluminum Substrates: Remove surface oxidation.

J. Wood Substrates:

1. Scrape and clean knots, and apply coat of knot sealer before applying primer.
2. Sand surfaces that will be exposed to view, and dust off.
3. Prime edges, ends, faces, undersides, and backsides of wood.
4. After priming, fill holes and imperfections in the finish surfaces with putty or plastic wood filler. Sand smooth when dried.

K. Gypsum Board Substrates: Do not begin paint application until finishing compound is dry and sanded smooth.

L. Plaster Substrates: Do not begin paint application until plaster is fully cured and dry.

M. Spray-Textured Ceiling Substrates: Do not begin paint application until surfaces are dry.

N. Cotton or Canvas Insulation Covering Substrates: Remove dust, dirt, and other foreign material that might impair bond of paints to substrates.

3.3 APPLICATION

A. Apply paints according to manufacturer's written instructions.

1. Use applicators and techniques suited for paint and substrate indicated.
2. Paint surfaces behind movable equipment and furniture same as similar exposed surfaces. Before final installation, paint surfaces behind permanently fixed equipment or furniture with prime coat only.
3. Paint front and backsides of access panels, removable or hinged covers, and similar hinged items to match exposed surfaces.

B. Tint each undercoat a lighter shade to facilitate identification of each coat if multiple coats of same material are to be applied. Tint undercoats to match color of topcoat, but provide sufficient difference in shade of undercoats to distinguish each separate coat.

C. If undercoats or other conditions show through topcoat, apply additional coats until cured film has a uniform paint finish, color, and appearance.

D. Apply paints to produce surface films without cloudiness, spotting, holidays, laps, brush marks, roller tracking, runs, sags, ropiness, or other surface imperfections. Cut in sharp lines and color breaks.

E. Painting Mechanical and Electrical Work: Paint items exposed in equipment rooms and occupied spaces including, but not limited to, the following:

1. Mechanical Work:

a. Uninsulated metal piping.
b. Uninsulated plastic piping.
c. Pipe hangers and supports.
d. Tanks that do not have factory-applied final finishes.
e. Visible portions of internal surfaces of metal ducts, without liner, behind air inlets and outlets.
f. Duct, equipment, and pipe insulation having cotton or canvas insulation covering or other paintable jacket material.
g. Mechanical equipment that is indicated to have a factory-primed finish for field painting.
h. <**Insert mechanical items to be painted.**>

2. Electrical Work:

a. Switchgear.
b. Panelboards.
c. Electrical equipment that is indicated to have a factory-primed finish for field painting.
d. <**Insert electrical items to be painted.**>

3.4 FIELD QUALITY CONTROL

A. Testing of Paint Materials: Owner reserves the right to invoke the following procedure at any time and as often as Owner deems necessary during the period when paints are being applied:

1. Owner will engage the services of a qualified testing agency to sample paint materials being used. Samples of material delivered to Project site will be taken, identified, sealed, and certified in presence of Contractor.
2. Testing agency will perform tests for compliance with product requirements.
3. Owner may direct Contractor to stop applying paints if test results show materials being used do not comply with product requirements. Contractor shall remove noncomplying-paint materials from Project site, pay for testing, and repaint surfaces painted with rejected materials. Contractor will be required to remove rejected materials from previously painted surfaces if, on repainting with complying materials, the two paints are incompatible.

3.5 CLEANING AND PROTECTION

A. At end of each workday, remove rubbish, empty cans, rags, and other discarded materials from Project site.

B. After completing paint application, clean spattered surfaces. Remove spattered paints by washing, scraping, or other methods. Do not scratch or damage adjacent finished surfaces.

C. Protect work of other trades against damage from paint application. Correct damage to work of other trades by cleaning, repairing, replacing, and refinishing, as approved by Architect, and leave in an undamaged condition.

D. At completion of construction activities of other trades, touch up and restore damaged or defaced painted surfaces.

3.6 INTERIOR PAINTING SCHEDULE

A. Concrete Substrates, Nontraffic Surfaces:

1. Latex System: MPI INT 3.1E.

    a. Prime Coat: Interior latex matching topcoat.
    b. Intermediate Coat: Interior latex matching topcoat.
    c. Topcoat: Interior latex [**(flat)**] [**(low sheen)**] [**(eggshell)**] [**(satin)**] [**(semigloss)**] [**(gloss)**].

2. Latex Over Sealer System: MPI INT 3.1A.

    a. Prime Coat: Interior latex primer/sealer.
    b. Intermediate Coat: Interior latex matching topcoat.
    c. Topcoat: Interior latex [**(flat)**] [**(low sheen)**] [**(eggshell)**] [**(satin)**] [**(semigloss)**] [**(gloss)**].

3. Latex Over Latex Aggregate System: MPI INT 3.1B.

    a. Prime Coat: Latex stucco and masonry textured coating.
    b. Intermediate Coat: Exterior latex matching topcoat.
    c. Topcoat: Exterior latex [**(flat)**] [**(semigloss)**] [**(gloss)**].

4. Alkyd System: MPI INT 3.1D.

    a. Prime Coat: Interior latex primer/sealer.
    b. Intermediate Coat: Interior alkyd matching topcoat.
    c. Topcoat: Interior alkyd [**(flat)**] [**(eggshell)**] [**(semigloss)**] [**(gloss)**].

5. Institutional Low-Odor/VOC Latex System: MPI INT 3.1M.

    a. Prime Coat: Institutional low-odor/VOC interior latex matching topcoat.
    b. Intermediate Coat: Institutional low-odor/VOC interior latex matching topcoat.
    c. Topcoat: Institutional low-odor/VOC interior latex [**(flat)**] [**(low sheen)**] [**(eggshell)**] [**(semigloss)**].

6. High-Performance Architectural Latex System: MPI INT 3.1C.

    a. Prime Coat: Interior latex primer/sealer.
    b. Intermediate Coat: High-performance architectural latex matching topcoat.
    c. Topcoat: High-performance architectural latex [**(low sheen)**] [**(eggshell)**] [**(satin)**] [**(semigloss)**].

B. Concrete Substrates, Traffic Surfaces:

1. Latex Floor Enamel System: MPI INT 3.2A.

    a. Prime Coat: Interior/exterior latex floor and porch paint (low gloss).
    b. Intermediate Coat: Interior/exterior latex floor and porch paint (low gloss).
    c. Topcoat: Interior/exterior latex floor and porch paint (low gloss).

2. Alkyd Floor Enamel System: MPI INT 3.2B.

    a. Prime Coat: Exterior/interior alkyd floor enamel (gloss).
    b. Intermediate Coat: Exterior/interior alkyd floor enamel (gloss).
    c. Topcoat: Exterior/interior alkyd floor enamel (gloss).

3. Concrete Stain System: MPI INT 3.2E.

    a. First Coat: Interior concrete floor stain.
    b. Topcoat: Interior concrete floor stain.

4. Clear Sealer System: MPI INT 3.2F.

    a. First Coat: Interior/exterior clear concrete floor sealer (solvent based).
    b. Topcoat: Interior/exterior clear concrete floor sealer (solvent based).

5. Water-Based Clear Sealer System: MPI INT 3.2G.

    a. First Coat: Interior/exterior clear concrete floor sealer (water based).
    b. Topcoat: Interior/exterior clear concrete floor sealer (water based).

C. Clay-Masonry Substrates:

1. Latex System: MPI INT 4.1A.

a. Prime Coat: Interior latex matching topcoat.
b. Intermediate Coat: Interior latex matching topcoat.
c. Topcoat: Interior latex [**(flat)**] [**(low sheen)**] [**(eggshell)**] [**(satin)**] [**(semigloss)**] [**(gloss)**].

2. Alkyd System: MPI INT 4.1D.

a. Prime Coat: Interior latex primer/sealer.
b. Intermediate Coat: Interior alkyd matching topcoat.
c. Topcoat: Interior alkyd [**(flat)**] [**(eggshell)**] [**(semigloss)**] [**(gloss)**].

3. Latex Aggregate System: MPI INT 4.1B.

a. Prime Coat: As recommended in writing by topcoat manufacturer.
b. Intermediate Coat: As recommended in writing by topcoat manufacturer.
c. Topcoat: Latex stucco and masonry textured coating.

4. Institutional Low-Odor/VOC Latex System: MPI INT 4.1M.

a. Prime Coat: Institutional low-odor/VOC interior latex matching topcoat.
b. Intermediate Coat: Institutional low-odor/VOC interior latex matching topcoat.
c. Topcoat: Institutional low-odor/VOC interior latex [**(flat)**] [**(low sheen)**] [**(eggshell)**] [**(semigloss)**].

5. High-Performance Architectural Latex System: MPI INT 4.1L.

a. Prime Coat: High-performance architectural latex matching topcoat.
b. Intermediate Coat: High-performance architectural latex matching topcoat.
c. Topcoat: High-performance architectural latex [**(low sheen)**] [**(eggshell)**] [**(satin)**] [**(semigloss)**].

D. CMU Substrates:

1. Latex System: MPI INT 4.2A.

a. Prime Coat: Interior/exterior latex block filler.
b. Intermediate Coat: Interior latex matching topcoat.
c. Topcoat: Interior latex [**(flat)**] [**(low sheen)**] [**(eggshell)**] [**(satin)**] [**(semigloss)**] [**(gloss)**].

2. Alkyd System: MPI INT 4.2C.

a. Prime Coat: Interior/exterior latex block filler.
b. Intermediate Coat: Interior alkyd matching topcoat.
c. Topcoat: Interior alkyd [**(flat)**] [**(eggshell)**] [**(semigloss)**] [**(gloss)**].

3. Alkyd Over Latex Sealer System: MPI INT 4.2N.

a. Prime Coat: Interior/exterior latex block filler.
b. Sealer Coat: Interior latex primer/sealer.
c. Intermediate Coat: Interior alkyd matching topcoat.

d. Topcoat: Interior alkyd [**(flat)**] [**(eggshell)**] [**(semigloss)**] [**(gloss)**].

4. Institutional Low-Odor/VOC Latex System: MPI INT 4.2E.

a. Prime Coat: Interior/exterior latex block filler.
b. Intermediate Coat: Institutional low-odor/VOC interior latex matching topcoat.
c. Topcoat: Institutional low-odor/VOC interior latex [**(flat)**] [**(low sheen)**] [**(eggshell)**] [**(semigloss)**].

5. High-Performance Architectural Latex System: MPI INT 4.2D.

a. Prime Coat: Interior/exterior latex block filler.
b. Intermediate Coat: High-performance architectural latex matching topcoat.
c. Topcoat: High-performance architectural latex [**(low sheen)**] [**(eggshell)**] [**(satin)**] [**(semigloss)**].

E. Steel Substrates:

1. Quick-Drying Enamel System: MPI INT 5.1A.

a. Prime Coat: Quick-drying alkyd metal primer.
b. Intermediate Coat: Quick-drying enamel matching topcoat.
c. Topcoat: Quick-drying enamel [**(semigloss)**] [**(high gloss)**].

2. Water-Based Dry-Fall System: MPI INT 5.1C.

a. Prime Coat: [**Alkyd anticorrosive**] [**Quick-drying alkyd**] metal primer.
b. Topcoat: [**Latex dry fog/fall**] [**Waterborne dry fall**].

3. Alkyd Dry-Fall System: MPI INT 5.1D.

a. Prime Coat: [**Alkyd anticorrosive**] [**Quick-drying alkyd**] metal primer.
b. Topcoat: Interior alkyd dry fog/fall.

4. Latex Over Alkyd Primer System: MPI INT 5.1Q.

a. Prime Coat: [**Alkyd anticorrosive**] [**Quick-drying alkyd**] metal primer.
b. Intermediate Coat: Interior latex matching topcoat.
c. Topcoat: Interior latex [**(flat)**] [**(low sheen)**] [**(eggshell)**] [**(satin)**] [**(semigloss)**] [**(gloss)**].

5. Alkyd System: MPI INT 5.1E.

a. Prime Coat: [**Alkyd anticorrosive**] [**Quick-drying alkyd**] metal primer.
b. Intermediate Coat: Interior alkyd matching topcoat.
c. Topcoat: Interior alkyd [**(flat)**] [**(eggshell)**] [**(semigloss)**] [**(gloss)**].

6. Aluminum Paint System: MPI INT 5.1M.

a. Prime Coat: [**Alkyd anticorrosive**] [**Quick-drying alkyd**] metal primer.
b. Intermediate Coat: Aluminum paint.
c. Topcoat: Aluminum paint.

7. Institutional Low-Odor/VOC Latex System: MPI INT 5.1S.

    a. Prime Coat: Rust-inhibitive primer (water based).
    b. Intermediate Coat: Institutional low-odor/VOC interior latex matching topcoat.
    c. Topcoat: Institutional low-odor/VOC interior latex [**(flat)**] [**(low sheen)**] [**(eggshell)**] [**(semigloss)**].

8. High-Performance Architectural Latex System: MPI INT 5.1R.

    a. Prime Coat: [**Alkyd anticorrosive**] [**Quick-drying alkyd**] metal primer.
    b. Intermediate Coat: High-performance architectural latex matching topcoat.
    c. Topcoat: High-performance architectural latex [**(low sheen)**] [**(eggshell)**] [**(satin)**] [**(semigloss)**].

F. Galvanized-Metal Substrates:

1. Water-Based Dry-Fall System: MPI INT 5.3H.

    a. Prime Coat: Waterborne dry fall.
    b. Topcoat: Waterborne dry fall.

2. Alkyd Dry-Fall System: MPI INT 5.3F.

    a. Prime Coat: Cementitious galvanized-metal primer.
    b. Topcoat: Interior alkyd dry fog/fall.

3. Latex System: MPI INT 5.3A.

    a. Prime Coat: Cementitious galvanized-metal primer.
    b. Intermediate Coat: Interior latex matching topcoat.
    c. Topcoat: Interior latex [**(flat)**] [**(low sheen)**] [**(eggshell)**] [**(satin)**] [**(semigloss)**] [**(gloss)**].

4. Latex Over Waterborne Primer System: MPI INT 5.3J.

    a. Prime Coat: Waterborne galvanized-metal primer.
    b. Intermediate Coat: Interior latex matching topcoat.
    c. Topcoat: Interior latex [**(flat)**] [**(low sheen)**] [**(eggshell)**] [**(satin)**] [**(semigloss)**] [**(gloss)**].

5. Alkyd System: MPI INT 5.3C.

    a. Prime Coat: Cementitious galvanized-metal primer.
    b. Intermediate Coat: Interior alkyd matching topcoat.
    c. Topcoat: Interior alkyd [**(flat)**] [**(eggshell)**] [**(semigloss)**] [**(gloss)**].

6. Aluminum Paint System: MPI INT 5.3G.

    a. Prime Coat: Cementitious galvanized-metal primer.
    b. Intermediate Coat: Aluminum paint.
    c. Topcoat: Aluminum paint.

7. Institutional Low-Odor/VOC Latex System: MPI INT 5.3N.

    a. Prime Coat: Waterborne galvanized-metal primer.
    b. Intermediate Coat: Institutional low-odor/VOC interior latex matching topcoat.
    c. Topcoat: Institutional low-odor/VOC interior latex [**(flat)**] [**(low sheen)**] [**(eggshell)**] [**(semigloss)**].

8. High-Performance Architectural Latex System: MPI INT 5.3M.

    a. Prime Coat: Waterborne galvanized-metal primer.
    b. Intermediate Coat: High-performance architectural latex matching topcoat.
    c. Topcoat: High-performance architectural latex [**(low sheen)**] [**(eggshell)**] [**(satin)**] [**(semigloss)**].

G. Aluminum (Not Anodized or Otherwise Coated) Substrates:

1. Latex System: MPI INT 5.4H.

    a. Prime Coat: Quick-drying primer for aluminum.
    b. Intermediate Coat: Interior latex matching topcoat.
    c. Topcoat: Interior latex [**(flat)**] [**(low sheen)**] [**(eggshell)**] [**(satin)**] [**(semigloss)**] [**(gloss)**].

2. Alkyd Over Vinyl Wash Primer System: MPI INT 5.4A.

    a. Prime Coat: Vinyl wash primer.
    b. Intermediate Coat: Interior alkyd matching topcoat.
    c. Topcoat: Interior alkyd [**(flat)**] [**(eggshell)**] [**(semigloss)**] [**(gloss)**].

3. Alkyd Over Quick-Drying Primer System: MPI INT 5.4J.

    a. Prime Coat: Quick-drying primer for aluminum.
    b. Intermediate Coat: Interior alkyd matching topcoat.
    c. Topcoat: Interior alkyd [**(flat**] [**(eggshell)**] [**(semigloss)**] [**(gloss)**].

4. Aluminum Paint System: MPI INT 5.4D.

    a. Prime Coat: Vinyl wash primer.
    b. Intermediate Coat: Aluminum paint.
    c. Topcoat: Aluminum paint.

5. Institutional Low-Odor/VOC Latex System: MPI INT 5.4G.

    a. Prime Coat: Quick-drying primer for aluminum.
    b. Intermediate Coat: Institutional low-odor/VOC interior latex matching topcoat.
    c. Topcoat: Institutional low-odor/VOC interior latex [**(flat)**] [**(low sheen)**] [**(eggshell)**] [**(semigloss)**].

6. High-Performance Architectural Latex System: MPI INT 5.4F.

    a. Prime Coat: Quick-drying primer for aluminum.
    b. Intermediate Coat: High-performance architectural latex matching topcoat.

c. Topcoat: High-performance architectural latex [**(low sheen)**] [**(eggshell)**] [**(satin)**] [**(semigloss)**].

H. Glue-Laminated Beam and Column Substrates:

1. Latex System: MPI INT 6.1M.

a. Prime Coat: Interior latex-based wood primer.
b. Intermediate Coat: Interior latex matching topcoat.
c. Topcoat: Interior latex [**(flat)**] [**(low sheen)**] [**(eggshell)**] [**(satin)**] [**(semigloss)**] [**(gloss)**].

2. Latex Over Alkyd Primer System: MPI INT 6.1A.

a. Prime Coat: Interior alkyd primer/sealer.
b. Intermediate Coat: Interior latex matching topcoat.
c. Topcoat: Interior latex [**(flat)**] [**(low sheen)**] [**(eggshell)**] [**(satin)**] [**(semigloss)**] [**(gloss)**].

3. Alkyd System: MPI INT 6.1B.

a. Prime Coat: Interior alkyd primer/sealer.
b. Intermediate Coat: Interior alkyd matching topcoat.
c. Topcoat: Interior alkyd [**(flat)**] [**(eggshell)**] [**(semigloss)**] [**(gloss)**].

4. Institutional Low-Odor/VOC Latex System: MPI INT 6.1Q.

a. Prime Coat: Interior latex-based wood primer.
b. Intermediate Coat: Institutional low-odor/VOC interior latex matching topcoat.
c. Topcoat: Institutional low-odor/VOC interior latex [**(flat)**] [**(low sheen)**] [**(eggshell)**] [**(semigloss)**].

5. High-Performance Architectural Latex System: MPI INT 6.1N.

a. Prime Coat: Interior latex-based wood primer.
b. Intermediate Coat: High-performance architectural latex matching topcoat.
c. Topcoat: High-performance architectural latex [**(low sheen)**] [**(eggshell)**] [**(satin)**] [**(semigloss)**].

I. Dressed Lumber Substrates: Including [**architectural woodwork**] [**doors**] <**Insert description**>.

1. Latex System: MPI INT 6.3T.

a. Prime Coat: Interior latex-based wood primer.
b. Intermediate Coat: Interior latex matching topcoat.
c. Topcoat: Interior latex [**(semigloss)**] [**(gloss)**].

2. Latex Over Alkyd Primer System: MPI INT 6.3U.

a. Prime Coat: Interior alkyd primer/sealer.
b. Intermediate Coat: Interior latex matching topcoat.

c. Topcoat: Interior latex [**(semigloss)**] [**(gloss)**].

3. Alkyd System: MPI INT 6.3B.

a. Prime Coat: Interior alkyd primer/sealer.
b. Intermediate Coat: Interior alkyd matching topcoat.
c. Topcoat: Interior alkyd [**(eggshell)**] [**(semigloss)**] [**(gloss)**].

4. Institutional Low-Odor/VOC Latex System: MPI INT 6.3V.

a. Prime Coat: Interior latex-based wood primer.
b. Intermediate Coat: Institutional low-odor/VOC interior latex matching topcoat.
c. Topcoat: Institutional low-odor/VOC interior latex [**(flat)**] [**(low sheen)**] [**(eggshell)**] [**(semigloss)**].

5. High-Performance Architectural Latex System: MPI INT 6.3A.

a. Prime Coat: Interior latex-based wood primer.
b. Intermediate Coat: High-performance architectural latex matching topcoat.
c. Topcoat: High-performance architectural latex [**(low sheen)**] [**(eggshell)**] [**(satin)**] [**(semigloss)**].

J. Wood Panel Substrates: Including [**painted plywood**] [**medium-density fiberboard**] [**hardboard**] <**Insert description**>.

1. Latex System: MPI INT 6.4R.

a. Prime Coat: Interior latex-based wood primer.
b. Intermediate Coat: Interior latex matching topcoat.
c. Topcoat: Interior latex [**(semigloss)**] [**(gloss)**].

2. Latex Over Alkyd Primer System: MPI INT 6.4A.

a. Prime Coat: Interior alkyd primer/sealer.
b. Intermediate Coat: Interior latex matching topcoat.
c. Topcoat: Interior latex [**(flat)**] [**(low sheen)**] [**(eggshell)**] [**(satin)**] [**(semigloss)**] [**(gloss)**].

3. Alkyd System: MPI INT 6.4B.

a. Prime Coat: Interior alkyd primer/sealer.
b. Intermediate Coat: Interior alkyd matching topcoat.
c. Topcoat: Interior alkyd [**(flat)**] [**(eggshell)**] [**(semigloss)**] [**(gloss)**].

4. Institutional Low-Odor/VOC Latex System: MPI INT 6.4T.

a. Prime Coat: Interior latex-based wood primer.
b. Intermediate Coat: Institutional low-odor/VOC interior latex matching topcoat.
c. Topcoat: Institutional low-odor/VOC interior latex [**(flat)**] [**(low sheen)**] [**(eggshell)**] [**(semigloss)**].

5. High-Performance Architectural Latex System: MPI INT 6.4S.

a. Prime Coat: Interior latex-based wood primer.
b. Intermediate Coat: High-performance architectural latex matching topcoat.
c. Topcoat: High-performance architectural latex [**(low sheen)**] [**(eggshell)**] [**(satin)**] [**(semigloss)**].

K. Dimension Lumber Substrates, Nontraffic Surfaces: Including [**exposed joists**] [**exposed beams**] <**Insert description**>.

1. Latex System: MPI INT 6.2D.

a. Prime Coat: Interior latex-based wood primer.
b. Intermediate Coat: Interior latex matching topcoat.
c. Topcoat: Interior latex [**(flat)**] [**(low sheen)**] [**(eggshell)**] [**(satin)**] [**(semigloss)**] [**(gloss)**].

2. Latex Over Alkyd Primer System: MPI INT 6.2A.

a. Prime Coat: Interior alkyd primer/sealer.
b. Intermediate Coat: Interior latex matching topcoat.
c. Topcoat: Interior latex [**(flat)**] [**(low sheen)**] [**(eggshell)**] [**(satin)**] [**(semigloss)**] [**(gloss)**].

3. Alkyd System: MPI INT 6.2C.

a. Prime Coat: Interior alkyd primer/sealer.
b. Intermediate Coat: Interior alkyd matching topcoat.
c. Topcoat: Interior alkyd [**(flat)**] [**(eggshell)**] [**(semigloss)**] [**(gloss)**].

4. Institutional Low-Odor/VOC Latex System: MPI INT 6.2L.

a. Prime Coat: Interior latex-based wood primer.
b. Intermediate Coat: Institutional low-odor/VOC interior latex matching topcoat.
c. Topcoat: Institutional low-odor/VOC interior latex [**(flat)**] [**(low sheen)**] [**(eggshell)**] [**(semigloss)**].

5. High-Performance Architectural Latex System: MPI INT 6.2B.

a. Prime Coat: Interior alkyd primer/sealer.
b. Intermediate Coat: High-performance architectural latex matching topcoat.
c. Topcoat: High-performance architectural latex [**(low sheen)**] [**(eggshell)**] [**(satin)**] [**(semigloss)**].

L. Wood Substrates, Traffic Surfaces:

1. Latex Floor Paint System: MPI INT 6.5G.

a. Prime Coat: Interior alkyd primer/sealer.
b. Intermediate Coat: Interior/exterior latex floor and porch paint (low gloss).
c. Topcoat: Interior/exterior latex floor and porch paint (low gloss).

2. Alkyd Floor Enamel System: MPI INT 6.5A.

a. Prime Coat: Exterior/interior alkyd floor enamel (gloss).
b. Intermediate Coat: Exterior/interior alkyd floor enamel (gloss).
c. Topcoat: Exterior/interior alkyd floor enamel (gloss).

M. Gypsum Board Substrates:

1. Latex System: MPI INT 9.2A.

a. Prime Coat: Interior latex [**primer/sealer**] [**matching topcoat**].
b. Intermediate Coat: Interior latex matching topcoat.
c. Topcoat: Interior latex [**(flat)**] [**(low sheen)**] [**(eggshell)**] [**(satin)**] [**(semigloss)**] [**(gloss)**].

2. Alkyd Over Latex Primer System: MPI INT 9.2C.

a. Prime Coat: Interior latex primer/sealer.
b. Intermediate Coat: Interior alkyd matching topcoat.
c. Topcoat: Interior alkyd [**(flat)**] [**(eggshell)**] [**(semigloss)**] [**(gloss)**].

3. Institutional Low-Odor/VOC Latex System: MPI INT 9.2M.

a. Prime Coat: Interior latex primer/sealer.
b. Intermediate Coat: Institutional low-odor/VOC interior latex matching topcoat.
c. Topcoat: Institutional low-odor/VOC interior latex [**(flat)**] [**(low sheen)**] [**(eggshell)**] [**(semigloss)**].

4. High-Performance Architectural Latex System: MPI INT 9.2B.

a. Prime Coat: Interior latex primer/sealer.
b. Intermediate Coat: High-performance architectural latex matching topcoat.
c. Topcoat: High-performance architectural latex [**(low sheen)**] [**(eggshell)**] [**(satin)**] [**(semigloss)**].

N. Plaster Substrates:

1. Latex System: MPI INT 9.2A.

a. Prime Coat: Interior latex [**primer/sealer**] [**matching topcoat**].
b. Intermediate Coat: Interior latex matching topcoat.
c. Topcoat: Interior latex [**(flat)**] [**(low sheen)**] [**(eggshell)**] [**(satin)**] [**(semigloss)**] [**(gloss)**].

2. Latex Over Alkyd Primer System: MPI INT 9.2K.

a. Prime Coat: Interior alkyd primer/sealer.
b. Intermediate Coat: Interior latex matching topcoat.
c. Topcoat: Interior latex [**(flat)**] [**(low sheen)**] [**(eggshell)**] [**(satin)**] [**(semigloss)**] [**(gloss)**].

3. Alkyd Over Latex Primer System: MPI INT 9.2C.

a. Prime Coat: Interior latex primer/sealer.

b. Intermediate Coat: Interior alkyd matching topcoat.
c. Topcoat: Interior alkyd [**(flat)**] [**(eggshell)**] [**(semigloss)**] [**(gloss)**].

4. Institutional Low-Odor/VOC Latex System: MPI INT 9.2M.

a. Prime Coat: Interior latex primer/sealer.
b. Intermediate Coat: Institutional low-odor/VOC interior latex matching topcoat.
c. Topcoat: Institutional low-odor/VOC interior latex [**(flat)**] [**(low sheen)**] [**(eggshell)**] [**(semigloss)**].

5. High-Performance Architectural Latex System: MPI INT 9.2B.

a. Prime Coat: Interior latex primer/sealer.
b. Intermediate Coat: High-performance architectural latex matching topcoat.
c. Topcoat: High-performance architectural latex [**(low sheen)**] [**(eggshell)**] [**(satin)**] [**(semigloss)**].

O. Spray-Textured Ceiling Substrates:

1. Latex (Flat) System: MPI INT 9.1A, spray applied.

a. Prime Coat: Interior latex [**primer/sealer**] [**(flat)**].
b. Topcoat: Interior latex (flat).

2. Latex System: MPI INT 9.1E, spray applied.

a. Prime Coat: Interior latex matching topcoat.
b. Intermediate Coat: Interior latex matching topcoat.
c. Topcoat: Interior latex [**(flat)**] [**(low sheen)**] [**(eggshell)**] [**(satin)**] [**(semigloss)**].

3. Latex Over Alkyd Primer System: MPI INT 9.1B.

a. Prime Coat: Interior alkyd primer/sealer.
b. Topcoat: Interior latex [**(flat)**] [**(low sheen)**] [**(eggshell)**] [**(satin)**] [**(semigloss)**] [**(gloss)**].

4. Alkyd (Flat) System: MPI INT 9.1C.

a. Prime Coat: Interior alkyd (flat).
b. Topcoat: Interior alkyd (flat).

5. Alkyd System: MPI INT 9.1D.

a. Prime Coat: Interior alkyd primer/sealer.
b. Intermediate Coat: Interior alkyd matching topcoat.
c. Topcoat: Interior alkyd [**(eggshell)**] [**(semigloss)**] [**(gloss)**].

P. Cotton or Canvas Insulation-Covering Substrates: Including [**pipe and duct coverings**] <**Insert description**>.

1. Latex System: MPI INT 10.1A.

a. Prime Coat: Interior latex [**primer/sealer**] [**matching topcoat**].
b. Intermediate Coat: Interior latex matching topcoat.
c. Topcoat: Interior latex [**(flat)**] [**(low sheen)**] [**(eggshell)**] [**(satin)**] [**(semigloss)**] [**(gloss)**].

2. Alkyd Over Latex Primer System: MPI INT 10.1B.

a. Prime Coat: Interior latex primer/sealer.
b. Intermediate Coat: Interior alkyd matching topcoat.
c. Topcoat: Interior alkyd [**(flat)**] [**(eggshell)**] [**(semigloss)**] [**(gloss)**].

3. Aluminum Paint System: MPI INT 10.1C.

a. Prime Coat: Interior latex primer/sealer.
b. Intermediate Coat: Aluminum paint.
c. Topcoat: Aluminum paint.

4. Institutional Low-Odor/VOC Latex System: MPI INT 10.1D.

a. Prime Coat: Interior latex primer/sealer.
b. Intermediate Coat: Institutional low-odor/VOC interior latex matching topcoat.
c. Topcoat: Institutional low-odor/VOC interior latex [**(flat)**] [**(low sheen)**] [**(eggshell)**] [**(semigloss)**].

END OF SECTION 09912

DIVISION 22 PLUMBING

SECTION 22 05 11
COMMON WORK RESULTS FOR PLUMBING

PART 1 - GENERAL

1.1 DESCRIPTION

A. The requirements of this Section shall apply to all sections of Division 22.

B. Definitions:

1. Exposed: Piping and equipment exposed to view in finished rooms.
2. Exterior: Piping and equipment exposed to weather be it temperature, humidity, precipitation, wind or solar radiation.
3. RE: resident Engineer
4. OR: Owner’s Representative

1.2 RELATED WORK

A. Section 01 00 00, GENERAL REQUIREMENTS.

B. Section 01 33 23, SHOP DRAWINGS, PRODUCT DATA, AND SAMPLES.

C. Section 01 74 19, CONSTRUCTION WASTE MANAGEMENT.

D. Section 01 81 13, SUSTAINABLE CONSTRUCTION REQUIREMENTS.

E. Section 01 91 00, GENERAL COMMISSIONING REQUIREMENTS.

F. Section 02 82 11, TRADITIONAL ASBESTOS ABATEMENT.

G. Section 03 30 00, CAST-IN-PLACE CONCRETE

H. Section 05 50 00, METAL FABRICATIONS.

I. Section 07 60 00, FLASHING AND SHEET METAL: Flashing for Wall and Roof Penetrations.

J. Section 07 84 00, FIRESTOPPING.

K. Section 07 92 00, JOINT SEALANTS.

L. Section 09 91 00, PAINTING.

M. Section 13 05 41, SEISMIC RESTRAINT REQUIREMENTS FOR NON-STRUCTURAL COMPONENTS.

N. Section 22 05 12, GENERAL MOTOR REQUIREMENTS FOR PLUMBING EQUIPMENT.

O. Section 22 07 11, PLUMBING INSULATION.

P. Section 22 08 00, COMMISSIONING OF PLUMBING SYSTEMS.

Q. Section 23 09 23, DIRECT-DIGITAL CONTROL SYSTEM FOR HVAC.

R. Section 26 05 11, REQUIREMENTS FOR ELECTRICAL INSTALLATIONS.

S. Section 26 05 19, LOW-VOLTAGE ELECTRICAL POWER CONDUCTORS AND CABLES.

T. Examine all drawings and criteria sheets and all other Sections of the Specifications for requirements, which affect work under this Section whether or not such work is specifically mentioned in this Section.

1.3 APPLICABLE PUBLICATIONS

A. The publications listed below shall form a part of this specification to the extent referenced. The publications are referenced in the text by the basic designation only

B. American Society of Mechanical Engineers (ASME):

B31.1-2013.....Power Piping

ASME Boiler and Pressure Vessel Code -

BPVC Section IX-2019.... Welding, Brazing, and Fusing Qualifications

C. American Society for Testing and Materials (ASTM):

A36/A36M-2019.....Standard Specification for Carbon Structural Steel

A575-96(2013)e1.....Standard Specification for Steel Bars, Carbon, Merchant Quality, M-Grades

E84-2013a.....Standard Test Method for Surface Burning Characteristics of Building Materials

E119-2012a.....Standard Test Methods for Fire Tests of Building Construction and Materials

D. International Code Council, (ICC):

IBC-2018.....International Building Code

IPC-2018.....International Plumbing Code

E. Manufacturers Standardization Society (MSS) of the Valve and Fittings Industry, Inc:

SP-58-2018.....Pipe Hangers and Supports - Materials, Design, Manufacture, Selection, Application and Installation

F. National Electrical Manufacturers Association (NEMA):

MG 1-2016.....Motors and Generators

G. National Fire Protection Association (NFPA):

51B-2019.....Standard for Fire Prevention During Welding, Cutting and Other Hot Work

54-2018.....National Fuel Gas Code

70-2020.....National Electrical Code (NEC)

99-2018.....Healthcare Facilities Code

H. NSF International (NSF):

5-2019.....Water Heaters, Hot Water Supply Boilers, and Heat Recovery Equipment

14-2019.....Plastic Piping System Components and Related Materials
61-2019.....Drinking Water System Components – Health Effects
372-2016.....Drinking Water System Components – Lead Content

1.4 SUBMITTALS

A. Submittals, including number of required copies, shall be submitted in accordance with Section 01 33 23, SHOP DRAWINGS, PRODUCT DATA, and SAMPLES.

B. Information and material submitted under this section shall be marked "SUBMITTED UNDER SECTION 22 05 11, COMMON WORK RESULTS FOR PLUMBING", with applicable paragraph identification.

C. If the project is phased, contractors shall submit complete phasing plan/schedule with manpower levels prior to commencing work. The phasing plan shall be detailed enough to provide milestones in the process that can be verified.

D. Contractor shall make all necessary field measurements and investigations to assure that the equipment and assemblies will meet contract requirements, and all equipment that requires regular maintenance, calibration, etc are accessable from the floor or permanent work platform. It is the Contractor’s responsibility to ensure all submittals meet the Owner’s specifications and requirements and it is assumed by the Owner that all submittals do meet the specifications unless the Contractor has requested a variance in writing and approved by OR prior to the submittal. If at any time during the project it is found that any item does not meet the owner’s specifications and there was no variance approval the Contractor shall correct at no additional cost or time to the Owner even if a submittal was approved.

E. If equipment is submitted which differs in arrangement from that shown, provide documentation proving equivalent performance, design standards and drawings that show the rearrangement of all associated systems. Additionally, any impacts on ancillary equipment or services such as foundations, piping, and electrical shall be the Contractor’s responsibility to design, supply, and install at no additional cost or time to the Owner. Owner’s approval will be given only if all features of the equipment and associated systems, including accessibility, are equivalent to that required by the contract.

F. Prior to submitting shop drawings for approval, Contractor shall certify in writing that manufacturers of all major items of equipment have each reviewed drawings and specifications, and have jointly coordinated and properly integrated their equipment and controls to provide a complete and efficient installation.

G. Submittals and shop drawings for interdependent items, containing applicable descriptive information, shall be furnished together and complete in a group. Coordinate and properly integrate materials and equipment in each group to provide a completely compatible and efficient installation. Final review and approvals will be made only by groups.

H. Manufacturer's Literature and Data including: Manufacturer’s literature shall be submitted under the pertinent section rather than under this section.

1. Electric motor data and variable speed drive data shall be submitted with the driven equipment.
2. Equipment and materials identification.
3. Firestopping materials.
4. Hangers, inserts, supports and bracing. Provide load calculations for variable spring and constant support hangers.
5. Wall, floor, and ceiling plates.

I. Coordination/Shop Drawings:

1. Submit complete consolidated and coordinated shop drawings for all new systems, and for existing systems that are in the same areas.
2. The coordination/shop drawings shall include plan views, elevations and sections of all systems and shall be on a scale of not less than 1:32 (3/8-inch equal to 1 foot). Clearly identify and dimension the proposed locations of the principal items of equipment. The drawings shall clearly show locations and adequate clearance for all equipment, piping, valves, control panels and other items. Show the access means for all items requiring access for operations and maintenance. Provide detailed coordination/shop drawings of all piping and duct systems. The drawings should include all lockout/tagout points for all energy/hazard sources for each piece of equipment. Coordinate lockout/tagout procedures and practices with local requirements.
3. Do not install equipment foundations, equipment or piping until coordination/shop drawings have been approved.

4. In addition, for plumbing systems, provide details of the following:
   a. Mechanical equipment rooms.
   b. Hangers, inserts, supports, and bracing.
   c. Pipe sleeves.
   d. Duct or equipment penetrations of floors, walls, ceilings, or roofs.

J. Rigging Plan: Provide documentation of the capacity and weight of the rigging and equipment intended to be used. The plan shall include the path of travel of the load, the staging area and intended access, and qualifications of the operator and signal person.

K. Plumbing Maintenance Data and Operating Instructions:
1. Maintenance and operating manuals in accordance with Section 01 00 00, GENERAL REQUIREMENTS, Article, INSTRUCTIONS, for systems and equipment.
2. Complete operating and maintenance manuals including wiring diagrams, technical data sheets, information for ordering replacement parts, and troubleshooting guide:
   a. Include complete list indicating all components of the systems.
   b. Include complete diagrams of the internal wiring for each item of equipment.
   c. Diagrams shall have their terminals identified to facilitate installation, operation and maintenance.
3. Provide a listing of recommended replacement parts for keeping in stock supply, including sources of supply, for equipment. Include in the listing belts for equipment: Belt manufacturer, model number, size and style, and distinguished whether of multiple belt sets.

L. Provide copies of approved plumbing equipment submittals to the Owner.

1.5 QUALITY ASSURANCE

A. Mechanical, electrical, and associated systems shall be safe, reliable, efficient, durable, easily and safely operable and maintainable, easily and safely accessible, and in compliance with applicable codes as specified. The systems shall be comprised of high quality institutional-class and industrial-class products of manufacturers that are experienced specialists in the required product lines. All construction firms and personnel shall be experienced and qualified specialists in industrial and institutional plumbing.

B. Products Criteria:

1. Standard Products: Material and equipment shall be the standard products of a manufacturer regularly engaged in the manufacture, supply and servicing of the specified products for at least 5 years. However, digital electronics devices, software and systems such as controls, instruments, computer work station, shall be the current generation of technology and basic design that has a proven satisfactory service record of at least 5 years.
2. Equipment Service: There shall be permanent service organizations, authorized and trained by manufacturers of the equipment supplied, located within 160 km (100 miles) of the project. These organizations shall come to the site and provide acceptable service to restore operations within 4 hours of receipt of notification by phone, e-mail or fax in event of an emergency, such as the shut-down of equipment; or within 24 hours in a non-emergency. Names, mail and e-mail addresses and phone numbers of service organizations providing service under these conditions for (as applicable to the project): pumps, compressors, water heaters, critical instrumentation, computer workstation and programming shall be submitted for project record and inserted into the operations and maintenance manual.
3. All items furnished shall be free from defects that would adversely affect the performance, maintainability and appearance of individual components and overall assembly.
4. The products and execution of work specified in Division 22 shall conform to the referenced codes and standards as required by the specifications. Local codes and amendments enforced by the local code official shall be enforced, if required by local authorities such as the natural gas supplier. If the local codes are more stringent, then the local code shall apply. Any conflicts shall be brought to the attention of the Owner’s Representative (OR).
5. Multiple Units: When two or more units of materials or equipment of the same type or class are required, these units shall be of the same manufacturer and model number, or if different models are required they shall be of the same manufacturer and identical to the greatest extent possible (i.e., same model series).

6. Assembled Units: Performance and warranty of all components that make up an assembled unit shall be the responsibility of the manufacturer of the completed assembly.
7. Nameplates: Nameplate bearing manufacturer's name or identifiable trademark shall be securely affixed in a conspicuous place on equipment, or name or trademark cast integrally with equipment, stamped or otherwise permanently marked on each item of equipment.
8. Asbestos products or equipment or materials containing asbestos is prohibited.
9.

C. Welding: Before any welding is performed, Contractor shall submit a certificate certifying that welders comply with the following requirements:
   1. Qualify welding processes and operators for piping according to ASME BPVC, Section IX, "Welding and Brazing Qualifications". Provide proof of current certification to CO.
   2. Comply with provisions of ASME B31 series "Code for Pressure Piping".
   3. Certify that each welder and welding operator has passed American Welding Society (AWS) qualification tests for the welding processes involved, and that certification is current.
   4. All welds shall be stamped according to the provisions of the AWS or ASME as required herein and by the association code.

D. Manufacturer's Recommendations: Where installation procedures or any part thereof are required to be in accordance with the recommendations of the manufacturer of the material being installed, printed copies of these recommendations shall be furnished to the OR prior to installation. Installation of the item will not be allowed to proceed until the recommendations are received. Failure to furnish these recommendations can be cause for rejection of the material.

E. Execution (Installation, Construction) Quality:
   1. All items shall be applied and installed in accordance with manufacturer's written instructions. Conflicts between the manufacturer's instructions and the contract documents shall be referred to the OR for resolution. Printed copies or electronic files of manufacturer’s installation instructions shall be provided to the OR at least 10 working days prior to commencing installation of any item.

2. All items that require access, such as for operating, cleaning, servicing, maintenance, and calibration, shall be easily and safely accessible by persons standing at floor level, or standing on permanent platforms, without the use of portable ladders. Examples of these items include but are not limited to: all types of valves, filters and strainers, transmitters, and control devices. Prior to commencing installation work, refer conflicts between this requirement and contract documents to OR for resolution. Failure of the Contractor to resolve or call attention to any discrepancies or deficiencies to the OR will result in the Contractor correcting at no additional cost or time to the Owner.

3. Complete layout drawings shall be required by Paragraph, SUBMITTALS. Construction work shall not start on any system until the layout drawings have been approved by OR.
4. Installer Qualifications: Installer shall be licensed and shall provide evidence of the successful completion of at least five projects of equal or greater size and complexity. Provide tradesmen skilled in the appropriate trade.
5. Workmanship/craftsmanship will be of the highest quality and standards. The Owner reserves the right to reject any work based on poor quality of workmanship this work shall be removed and done again at no additional cost or time to the Owner.

F. Upon request by Owner, provide lists of previous installations for selected items of equipment. Include contact persons who will serve as references, with current telephone numbers and e-mail addresses.

G. Guaranty: Warranty of Construction, FAR clause 52.246-21.

H. Plumbing Systems: IPC, International Plumbing Code. Unless otherwise required herein, perform plumbing work in accordance with the latest version of the IPC. For IPC codes referenced in the contract documents, advisory provisions shall be considered mandatory, the word “should” shall be interpreted as “shall”. Reference to the “code official” or “owner” shall be interpreted to mean the OR.

I. Cleanliness of Piping and Equipment Systems:
1. Care shall be exercised in the storage and handling of equipment and piping material to be incorporated in the work. Debris arising from cutting, threading and welding of piping shall be removed.

2. Piping systems shall be flushed, blown or pigged as necessary to deliver clean systems.
3. The interior of all tanks shall be cleaned prior to delivery and beneficial use by the Owner. All piping shall be tested in accordance with the specifications and the International Plumbing Code (IPC). All filters, strainers, fixture faucets shall be flushed of debris prior to final acceptance.
4. Contractor shall be fully responsible for all costs, damage, and delay arising from failure to provide clean systems.

1.6 DELIVERY, STORAGE AND HANDLING

A. Protection of Equipment:
1. Equipment and material placed on the job site shall remain in the custody of the Contractor until phased acceptance, whether or not the Owner has reimbursed the Contractor for the equipment and material. The Contractor is solely responsible for the protection of such equipment and material against any damage or theft.
2. Damaged equipment shall be replaced with an identical unit as determined and directed by the OR. Such replacement shall be at no additional cost or additional time to the Owner.
3. Interiors of new equipment and piping systems shall be protected against entry of foreign matter. Both inside and outside shall be cleaned before painting or placing equipment in operation.
4. Existing equipment and piping being worked on by the Contractor shall be under the custody and responsibility of the Contractor and shall be protected as required for new work.
5. Protect plastic piping and tanks from ultraviolet light (sunlight) while in pre-construction. Plastic piping and tanks shall not be installed exposed to sunlight without metal jacketing to block ultraviolet rays.

1.7 AS-BUILT DOCUMENTATION

A. Submit manufacturer’s literature and data updated to include submittal review comments and any equipment substitutions.
B. Submit operation and maintenance data updated to include submittal review comments, Owner’s approved substitutions and construction revisions shall be in electronic version on CD inserted into a three—ring binder. All aspects of system operation and maintenance procedures, including applicable piping isometrics, wiring diagrams of all circuits, a written description of system design, control logic,

and sequence of operation shall be included in the operation and maintenance manual. The operations and maintenance manual shall include troubleshooting techniques and procedures for emergency situations. Notes on all special systems or devices shall be included. A List of recommended spare parts (manufacturer, model number, and quantity) shall be furnished. Information explaining any special knowledge or tools the owner will be required to employ shall be inserted into the As-Built documentation.

C. The installing Contractor shall maintain as-built drawings of each completed phase for verification; and, shall provide the complete set at the time of final systems certification testing. Should the installing Contractor engage the testing company to provide as-built or any portion thereof, it shall not be deemed a conflict of interest or breach of the 'third party testing company' requirement. Provide record drawings as follows:
   1. Red-lined, hand-marked drawings are to be provided, with one paper copy and a scanned PDF version of the hand-marked drawings provided on CD.
   2. As-built drawings are to be provided, with a copy of them on AutoCAD latest version provided on CD. The CAD drawings shall use multiple line layers with a separate individual layer for each system.

D. The as-built drawings shall indicate the location and type of all lockout/tagout points for all energy sources for all equipment and pumps to include breaker location and numbers, valve tag numbers, etc. Coordinate lockout/tagout procedures and practices with local Owner's requirements.

E. Certification documentation shall be provided to OR 21 working days prior to submitting the request for final inspection. The documentation shall include all test results, the names of individuals performing work for the testing agency on this project, detailed procedures followed for all tests, and provide documentation/certification that all results of tests were within limits specified. Test results shall contain written sequence of test procedure with written test results annotated at each step along with the expected outcome or setpoint. The results shall include all readings, including but not limited to data on device (make, model and performance characteristics_), normal pressures, switch ranges, trip points, amp readings, and calibration

data to include equipment serial numbers or individual identifications, etc.

1.8 JOB CONDITIONS – WORK IN EXISTING BUILDING

A. Building Operation: Location employees will be continuously operating and managing all facilities, including temporary facilities that serve the facility.

B. Maintenance of Service: Schedule all work to permit continuous service as required by the Owner's Representative.

C. Building Working Environment: Maintain the architectural and structural integrity of the building and the working environment at all times. Maintain the interior of building at 18 degrees C (65 degrees F) minimum. Limit the opening of doors, windows or other access openings to brief periods as necessary for rigging purposes. Storm water or ground water leakage is prohibited. Provide daily clean-up of construction and demolition debris on all floor surfaces and on all equipment being operated by Owner. Maintain all egress routes and safety systems/devices.

D. Acceptance of Work for Facility Operation: As new equipment, systems and facilities are made available for operation and these items are deemed of beneficial use to the Owner's, inspections and tests will be performed. Based on the inspections, a list of contract deficiencies will be issued to the Contractor. After correction of deficiencies as necessary for beneficial use, the Contracting Officer will process necessary acceptance and the equipment will then be under the control and operation of Owner personnel.

PART 2 - PRODUCTS

2.1 MATERIALS FOR VARIOUS SERVICES

A. See Piping specification on plumbing drawings

B. Plastic pipe, fittings and solvent cement shall meet NSF 14 and shall bear the NSF seal "NSF-PW". Polypropylene pipe and fittings shall comply with NSF 14 and NSF 61. Solder or flux containing lead shall not be used with copper pipe.

C. Material or equipment containing a weighted average of greater than 0.25 percent lead shall not be used in any potable water system intended for human consumption and shall be certified in accordance with NSF 61 or NSF 372.

D. In-line devices such as water meters, building valves, check valves, stops, valves, fittings, tanks and backflow preventers shall comply with NSF 61 and NSF 372.

E. End point devices such as drinking fountains, lavatory faucets, kitchen and bar faucets, ice makers supply stops, and end-point control valves used to dispense drinking water must meet requirements of NSF 61 and NSF 372.

2.2 FACTORY-ASSEMBLED PRODUCTS

A. Standardization of components shall be maximized to reduce spare part requirements.

B. Manufacturers of equipment assemblies that include components made by others shall assume complete responsibility for final assembled unit.

1. All components of an assembled unit need not be products of same manufacturer.
2. Constituent parts that are alike shall be products of a single manufacturer.
3. Components shall be compatible with each other and with the total assembly for intended service.
4. Contractor shall guarantee performance of assemblies of components and shall repair or replace elements of the assemblies as required to deliver specified performance of the complete assembly at no additional cost or time to the Owner.

C. Components of equipment shall bear manufacturer's name and trademark, model number, serial number and performance data on a name plate securely affixed in a conspicuous place, or cast integral with, stamped or otherwise permanently marked upon the components of the equipment.

D. Major items of equipment, which serve the same function, shall be the same make and model.

2.3 COMPATIBILITY OF RELATED EQUIPMENT

A. Equipment and materials installed shall be compatible in all respects with other items being furnished and with existing items so that the result will be a complete and fully operational system that conforms to contract requirements.

2.4 SAFETY GUARDS

A. Equipment shall have moving parts protected from personal injury.

2.5 LIFTING ATTACHMENTS

A. Equipment shall be provided with suitable lifting attachments to enable equipment to be lifted in its normal position. Lifting attachments

shall withstand any handling conditions that might be encountered, without bending or distortion of shape, such as rapid lowering and braking of load.

2.6 ELECTRIC MOTORS, MOTOR CONTROL, CONTROL WIRING

A. All material and equipment furnished and installation methods used shall conform to the requirements of Section 22 05 12, GENERAL MOTOR REQUIREMENTS FOR PLUMBING EQUIPMENT. All electrical wiring, conduit, and devices necessary for the proper connection, protection and operation of the systems shall be provided. Premium efficient motors shall be provided. Unless otherwise specified for a particular application, electric motors shall have the following requirements.

B. Special Requirements:

1. Where motor power requirements of equipment furnished deviate from power shown on plans, provide electrical service designed under the requirements of NFPA 70 at no additional cost or time to the Owner.
2. Assemblies of motors, starters, and controls and interlocks on factory assembled and wired devices shall be in accordance with the requirements of this specification.
3. Wire and cable materials specified in the electrical division of the specifications shall be modified as follows:
   a. Wiring material located where temperatures can exceed 71° C (160° F) shall be stranded copper with Teflon FEP insulation with jacket. This includes wiring on the boilers and water heaters.
   b. Other wiring at boilers and water heaters, and to control panels, shall be NFPA 70 designation THWN.
   c. Shielded conductors or wiring in separate conduits for all instrumentation and control systems shall be provided where recommended by manufacturer of equipment.
4. Motor sizes shall be selected so that the motors do not operate into the service factor at maximum required loads on the driven equipment. Motors on pumps shall be sized for non-overloading at all points on the pump performance curves.
5. Motors utilized with variable frequency drives shall be rated “inverter-ready” per NEMA Standard, MG1.

C. Motor Efficiency and Power Factor: All motors, when specified as “high efficiency or Premium Efficiency” by the project specifications on driven equipment, shall conform to efficiency and power factor requirements in Section 22 05 12, GENERAL MOTOR REQUIREMENTS FOR

PLUMBING EQUIPMENT, with no consideration of annual service hours. Motor manufacturers generally define these efficiency requirements as "NEMA premium efficient" and the requirements generally exceed those of the Energy Policy Act (EPACT), revised 2005. Motors not specified as "high efficiency or premium efficient" shall comply with EPACT.

D. Single-phase Motors: Capacitor-start type for hard starting applications. Motors for centrifugal pumps may be split phase or permanent split capacitor (PSC).

E. Poly-phase Motors: NEMA Design B, Squirrel cage, induction type. Each two-speed motor shall have two separate windings. A time delay (20 seconds minimum) relay shall be provided for switching from high to low speed.

F. Rating: Rating shall be continuous duty at 100 percent capacity in an ambient temperature of 40° C (104° F); minimum horsepower as shown on drawings; maximum horsepower in normal operation shall not exceed nameplate rating without service factor.

G. Insulation Resistance: Not less than one-half meg-ohm between stator conductors and frame shall be measured at the time of final inspection.

2.7 VARIABLE SPEED MOTOR CONTROLLERS

A. Refer to Section 26 05 11 for specifications.

B. The combination of controller and motor shall be provided by the respective pump manufacturer and shall be rated for 100 percent output performance. Multiple units of the same class of equipment, i.e. pumps, shall be product of a single manufacturer.

C. Motors shall be premium efficient type, "invertor duty", and be approved by the motor controller manufacturer. The controller-motor combination shall be guaranteed to provide full motor nameplate horsepower in variable frequency operation. Both driving and driven motor sheaves shall be fixed pitch.

D. Controller shall not add any current or voltage transients to the input AC power distribution system, DDC controls, sensitive medical equipment, etc., nor shall be affected from other devices on the AC power system.

2.8 EQUIPMENT AND MATERIALS IDENTIFICATION

A. Use symbols, nomenclature and equipment numbers specified, shown in the drawings, or shown in the maintenance manuals. Coordinate equipment and valve identification with local facility shops. In addition, provide bar code identification nameplate for all equipment which will allow

the equipment identification code to be scanned into the system for maintenance and inventory tracking. Identification for piping is specified in Section 09 91 00, PAINTING.

B. Interior (Indoor) Equipment: Engraved nameplates, with letters not less than 7 mm (3/16 inch) high of brass with black-filled letters, or rigid black plastic with white letters specified in Section 09 91 00, PAINTING shall be permanently fastened to the equipment. Unit components such as water heaters, tanks, coils, filters, etc. shall be identified.

C. Exterior (Outdoor) Equipment: Brass nameplates, with engraved black filled letters, not less than 7 mm (3/16 inch) high riveted or bolted to the equipment.

D. Control Items: All temperature, pressure, and controllers shall be labeled and the component’s function identified. Identify and label each item as they appear on the control diagrams.

E. Valve Tags and Lists:

1. Plumbing: All valves shall be provided with valve tags and listed on a valve list (Fixture stops not included).
2. Valve tags: Engraved black filled numbers and letters not less than 15 mm (1/2 inch) high for number designation, and not less than 8 mm (1/4 inch) for service designation on 19 gauge, 40 mm (1-1/2 inches) round brass disc, attached with brass "S" hook or brass chain.
3. Valve lists: Valve lists shall be created using a word processing program and printed on plastic coated cards. The plastic-coated valve list card(s), sized 215 mm (8-1/2 inches) by 275 mm (11 inches) shall show valve tag number, valve function and area of control for each service or system. The valve list shall be in a punched 3-ring binder notebook. An additional copy of the valve list shall be mounted in picture frames for mounting to a wall. OR shall instruct Contractor where frames shall be mounted.
4. A detailed plan for each floor of the building indicating the location and valve number for each valve shall be provided in the 3-ring binder notebook. Each valve location shall be identified with a color-coded sticker or thumb tack in ceiling or access door.

2.9 FIRESTOPPING

A. Section 07 84 00, FIRESTOPPING specifies an effective barrier against the spread of fire, smoke and gases where penetrations occur for

piping. Refer to Section 22 07 11, PLUMBING INSULATION, for pipe insulation.

2.10 PIPE AND EQUIPMENT SUPPORTS AND RESTRAINTS

A. In lieu of the paragraph which follows, suspended equipment support and restraints may be designed and installed in accordance with the International Building Code (IBC)// and Section 13 05 41, SEISMIC RESTRAINT REQUIREMENTS FOR NON-STRUCTURAL COMPONENTS.// Submittals based on the International Building Code (IBC)// and Section 13 05 41, SEISMIC RESTRAINT REQUIREMENTS FOR NON-STRUCTURAL COMPONENTS// requirements, or the following paragraphs of this Section shall be stamped and signed by a professional engineer registered in the state where the project is located. The Support system of suspended equipment over 227 kg (500 pounds) shall be submitted for approval of the OR in all cases. See the above specifications for lateral force design requirements.

B. Type Numbers Specified: For materials, design, manufacture, selection, application, and installation refer to MSS SP-58. Refer to Section 05 50 00, METAL FABRICATIONS, for miscellaneous metal support materials and prime coat painting.

C. For Attachment to Concrete Construction:
   1. Concrete insert: Type 18, MSS SP-58.
   2. Self-drilling expansion shields and machine bolt expansion anchors: Permitted in concrete not less than 100 mm (4 inches) thick when approved by the OR for each job condition.
   3. Power-driven fasteners: Permitted in existing concrete or masonry not less than 100 mm (4 inches) thick when approved by the ORORfor each job condition.

D. For Attachment to Steel Construction: MSS SP-58.
   1. Welded attachment: Type 22.
   2. Beam clamps: Types 20, 21, 28 or 29. Type 23 C-clamp may be used for individual copper tubing up to 23 mm (7/8 inch) outside diameter.

E. Hanger Rods: Hot-rolled steel, ASTM A36/A36M or ASTM A575 for allowable load listed in MSS SP-58. For piping, provide adjustment means for controlling level or slope. Types 13 or 15 turn-buckles shall provide 40 mm (1-1/2 inches) minimum of adjustment and incorporate locknuts. All-thread rods are acceptable.

F. Multiple (Trapeze) Hangers: Galvanized, cold formed, lipped steel channel horizontal member, not less than 43 mm by 43 mm (1-5/8 inches

by 1-5/8 inches), 2.7 mm (No. 12 gauge), designed to accept special spring held, hardened steel nuts.

1. Allowable hanger load: Manufacturers rating less 91kg (200 pounds).
2. Guide individual pipes on the horizontal member of every other trapeze hanger with 8 mm (1/4 inch) U-bolt fabricated from steel rod. Provide Type 40 insulation shield, secured by two 15 mm (1/2 inch) galvanized steel bands, or insulated calcium silicate shield for insulated piping at each hanger.

G. Pipe Hangers and Supports: (MSS SP-58), use hangers sized to encircle insulation on insulated piping. Refer to Section 22 07 11, PLUMBING INSULATION for insulation thickness. To protect insulation, provide Type 39 saddles for roller type supports or insulated calcium silicate shields. Provide Type 40 insulation shield or insulated calcium silicate shield at all other types of supports and hangers including those for insulated piping.

1. General Types (MSS SP-58):
   a. Standard clevis hanger: Type 1; provide locknut.
   b. Riser clamps: Type 8.
   c. Wall brackets: Types 31, 32 or 33.
   d. Roller supports: Type 41, 43, 44 and 46.
   e. Saddle support: Type 36, 37 or 38.
   f. Turnbuckle: Types 13 or 15.
   g. U-bolt clamp: Type 24.
   h. Copper Tube:
      1) Hangers, clamps and other support material in contact with tubing shall be painted with copper colored epoxy paint, copper-coated, plastic coated or taped with isolation tape to prevent electrolysis.
      2) For vertical runs use epoxy painted, copper-coated or plastic coated riser clamps.
      3) For supporting tube to strut: Provide epoxy painted pipe straps for copper tube or plastic inserted vibration isolation clamps.
      4) Insulated Lines: Provide pre-insulated calcium silicate shields sized for copper tube.
   i. Supports for plastic or glass piping: As recommended by the pipe manufacturer with black rubber tape extending 1 inch beyond steel support or clamp.

j. Spring hangers are required on all plumbing system pumps one horsepower and greater.

2. Plumbing Piping (Other Than General Types):
   a. Horizontal piping: Type 1, 5, 7, 9, and 10.
   b. Chrome plated piping: Chrome plated supports.
   c. Hangers and supports in pipe chase: Prefabricated system ABS self-extinguishing material, not subject to electrolytic action, to hold piping, prevent vibration and compensate for all static and operational conditions.
   d. Blocking, stays and bracing: Angle iron or preformed metal channel shapes, 1.3 mm (18 gauge) minimum.

H. Pre-insulated Calcium Silicate Shields:
   1. Provide 360-degree water resistant high density 965 kPa (140 psig) compressive strength calcium silicate shields encased in galvanized metal.
   2. Pre-insulated calcium silicate shields to be installed at the point of support during erection.
   3. Shield thickness shall match the pipe insulation.
   4. The type of shield is selected by the temperature of the pipe, the load it must carry, and the type of support it will be used with.
      a. Shields for supporting cold water shall have insulation that extends a minimum of 25 mm (1 inch) past the sheet metal.
      b. The insulated calcium silicate shield shall support the maximum allowable water filled span as indicated in MSS SP-58. To support the load, the shields shall have one or more of the following features: structural inserts 4138 kPa (600 psig) compressive strength, an extra bottom metal shield, or formed structural steel (ASTM A36/A36M) wear plates welded to the bottom sheet metal jacket.
   5. Shields may be used on steel clevis hanger type supports, trapeze hangers, roller supports or flat surfaces.

I. Seismic Restraint of Piping: Refer to Section 13 05 41, SEISMIC RESTRAINT REQUIREMENTS FOR NON-STRUCTURAL COMPONENTS.

2.11 PIPE PENETRATIONS

A. Pipe penetration sleeves shall be installed for all pipe other than rectangular blocked out floor openings for risers in mechanical bays.

B. Pipe penetration sleeve materials shall comply with all firestopping requirements for each penetration.

C. To prevent accidental liquid spills from passing to a lower level, provide the following:
   1. For sleeves: Extend sleeve 25 mm (1 inch) above finished floor and provide sealant for watertight joint.
   2. For blocked out floor openings: Provide 40 mm (1-1/2 inch) angle set in silicone adhesive around opening.
   3. For drilled penetrations: Provide 40 mm (1-1/2 inch) angle ring or square set in silicone adhesive around penetration.

D. Penetrations are prohibited through beams or ribs, but may be installed in concrete beam flanges, with structural engineer prior approval. Any deviation from these requirements must receive prior approval of OR.

E. Sheet metal, plastic, or moisture resistant fiber sleeves shall be provided for pipe passing through floors, interior walls, and partitions, unless brass or steel pipe sleeves are specifically called for below.

F. Cast iron or zinc coated pipe sleeves shall be provided for pipe passing through exterior walls below grade. The space between the sleeve and pipe shall be made watertight with a modular or link rubber seal. The link seal shall be applied at both ends of the sleeve.

G. Galvanized steel or an alternate black iron pipe with asphalt coating sleeves shall be for pipe passing through concrete beam flanges, except where brass pipe sleeves are called for. A galvanized steel sleeve shall be provided for pipe passing through floor of mechanical rooms, laundry work rooms, and animal rooms above basement. Except in mechanical rooms, sleeves shall be connected with a floor plate.

H. Brass Pipe Sleeves shall be provided for pipe passing through quarry tile, terrazzo or ceramic tile floors. The sleeve shall be connected with a floor plate.

I. Sleeve clearance through floors, walls, partitions, and beam flanges shall be 25 mm (1 inch) greater in diameter than external diameter of pipe. Sleeve for pipe with insulation shall be large enough to accommodate the insulation plus 25 mm (1 inch) in diameter. Interior openings shall be caulked tight with firestopping material and sealant to prevent the spread of fire, smoke, water and gases.

J. Sealant and Adhesives: Shall be as specified in Section 07 92 00, JOINT SEALANTS. Bio-based materials shall be utilized when possible.

K. Pipe passing through roof shall be installed through a 4.9 kg per square meter copper flashing with an integral skirt or flange. Skirt or flange shall extend not less than 200 mm (8 inches) from the pipe and set in a solid coating of bituminous cement. Extend flashing a minimum of 250 mm (10 inches) up the pipe. Pipe passing through a waterproofing membrane shall be provided with a clamping flange. The annular space between the sleeve and pipe shall be sealed watertight.

2.12 TOOLS AND LUBRICANTS

A. Furnish, and turn over to the OR, special tools not readily available commercially, that are required for disassembly or adjustment of equipment and machinery furnished.

B. Grease Guns with Attachments for Applicable Fittings: One for each type of grease required for each motor or other equipment.

C. Tool Containers: metal, permanently identified for intended service and mounted, or located, where directed by the OR.

D. Lubricants: A minimum of 0.95 L (1 quart) of oil, and 0.45 kg (1 pound) of grease, of equipment manufacturer's recommended grade and type, in unopened containers and properly identified as to use for each different application. Bio-based materials shall be utilized when possible.

2.13 WALL, FLOOR AND CEILING PLATES

A. Material and Type: Chrome plated brass or chrome plated steel, one piece or split type with concealed hinge, with set screw for fastening to pipe, or sleeve. Use plates that fit tight around pipes, cover openings around pipes and cover the entire pipe sleeve projection.

B. Thickness: Not less than 2.4 mm (3/32 inch) for floor plates. For wall and ceiling plates, not less than 0.64 mm (0.025 inch) for up to 75 mm (3 inch) pipe, 0.89 mm (0.035 inch) for larger pipe.

C. Locations: Use where pipe penetrates floors, walls and ceilings in exposed locations, in finished areas only. Wall plates shall be used where insulation ends on exposed water supply pipe drop from overhead. A watertight joint shall be provided in spaces where brass or steel pipe sleeves are specified.

2.14 ASBESTOS

A. Materials containing asbestos are prohibited.

PART 3 - EXECUTION

3.1 ARRANGEMENT AND INSTALLATION OF EQUIPMENT AND PIPING

A. Location of piping, sleeves, inserts, hangers, and equipment, access provisions shall be coordinated with the work of all trades. Piping, sleeves, inserts, hangers, and equipment shall be located clear of windows, doors, openings, light outlets, and other services and utilities. Equipment layout drawings shall be prepared to coordinate proper location and personnel access of all facilities. The drawings shall be submitted for review.

B. Manufacturer's published recommendations shall be followed for installation methods not otherwise specified.

C. Operating Personnel Access and Observation Provisions: All equipment and systems shall be arranged to provide clear view and easy access, without use of portable ladders, for maintenance, testing and operation of all devices including, but not limited to: all equipment items, valves, backflow preventers, filters, strainers, transmitters, sensors, meters and control devices. All gauges and indicators shall be clearly visible by personnel standing on the floor or on permanent platforms. Maintenance and operating space and access provisions that are shown in the drawings shall not be changed nor reduced.

D. Structural systems necessary for pipe and equipment support shall be coordinated to permit proper installation.

E. Location of pipe sleeves, trenches and chases shall be accurately coordinated with equipment and piping locations.

F. Cutting Holes:

1. Holes shall be located to avoid interference with structural members such as beams or grade beams. Holes shall be laid out in advance and drilling done only after approval by OR. If the Contractor considers it necessary to drill through structural members, this matter shall be referred to OR for approval.
2. Waterproof membrane shall not be penetrated. Pipe floor penetration block outs shall be provided outside the extents of the waterproof membrane.
3. Holes through concrete and masonry shall be cut by rotary core drill. Pneumatic hammer, impact electric, and hand or manual hammer type drill will not be allowed, except as permitted by OR where working area space is limited.

G. Minor Piping: Generally, small diameter pipe runs from drips and drains, water cooling, and other services are not shown but must be provided.

H. Protection and Cleaning:

1. Equipment and materials shall be carefully handled, properly stored, and adequately protected to prevent damage before and during installation, in accordance with the manufacturer's recommendations and as approved by the OR. Damaged or defective items in the opinion of the OR, shall be replaced at no additional cost or time to the Owner.
2. Protect all finished parts of equipment, such as shafts and bearings where accessible, from rust prior to operation by means of protective grease coating and wrapping. Close pipe openings with caps or plugs during installation. Pipe openings, equipment, and plumbing fixtures shall be tightly covered against dirt or mechanical injury. At completion of all work thoroughly clean fixtures, exposed materials and equipment.

I. Concrete and Grout: Concrete and shrink compensating grout 25 MPa (3000 psig) minimum, specified in Section 03 30 00, CAST-IN-PLACE CONCRETE, shall be used for all pad or floor mounted equipment.

J. Gauges, thermometers, valves and other devices shall be installed with due regard for ease in reading or operating and maintaining said devices. Thermometers and gauges shall be located and positioned to be easily read by operator or staff standing on floor or walkway provided. Servicing shall not require dismantling adjacent equipment or pipe work.

K. Interconnection of Controls and Instruments: Electrical interconnection is generally not shown but shall be provided. This includes interconnections of sensors, transmitters, transducers, control devices, control and instrumentation panels, alarms, instruments and computer workstations. Comply with NFPA 70.

L. Domestic cold and hot water systems interface with the HVAC control system for the temperature, pressure and flow monitoring requirements to mitigate legionella. See the HVAC control points list as specified on drawings.

M. Work in Existing Building:

1. Perform as specified in Article, OPERATIONS AND STORAGE AREAS, Article, ALTERATIONS, and Article, RESTORATION of the Section 01 00

00, GENERAL REQUIREMENTS for relocation of existing equipment, alterations and restoration of existing building(s).

2. As specified in Section 01 00 00, GENERAL REQUIREMENTS, Article, OPERATIONS AND STORAGE AREAS, make alterations to existing service piping at times that will cause the least interfere with normal operation of the facility.

N. Work in Animal Research Areas: Seal all pipe penetrations with silicone sealant to prevent entrance of insects.

O. Work in bathrooms, restrooms, housekeeping closets: All pipe penetrations behind escutcheons shall be sealed with plumbers' putty.

P. Switchgear Drip Protection: Every effort shall be made to eliminate the installation of pipe above data equipment, and electrical and telephone switchgear. If this is not possible, encase pipe in a second pipe with a minimum of joints. Drain valve shall be provided in low point of casement pipe.

Q. Inaccessible Equipment:

1. Where the Owner determines that the Contractor has installed equipment not conveniently accessible for operation and maintenance, equipment shall be removed and reinstalled or remedial action performed as directed at no additional cost or additional time to the Owner.

2. The term "conveniently accessible" is defined as capable of being reached without the use of ladders, or without climbing or crawling under or over obstacles such as electrical conduit, motors, fans, pumps, belt guards, transformers, high voltage lines, piping, and ductwork.

3.2 TEMPORARY PIPING AND EQUIPMENT

A. Continuity of operation of existing facilities may require temporary installation or relocation of equipment and piping. Temporary equipment or pipe installation or relocation shall be provided to maintain continuity of operation of existing facilities.

B. The Contractor shall provide all required facilities in accordance with the requirements of phased construction and maintenance of service. All piping and equipment shall be properly supported, sloped to drain, operate without excessive stress, and shall be insulated where injury can occur to personnel by contact with operating facilities. The requirements of paragraph 3.1 shall apply.

C. Temporary facilities and piping shall be completely removed back to the nearest active distribution branch or main pipe line and any openings in structures sealed. Dead legs are prohibited in potable water systems. Necessary blind flanges and caps shall be provided to seal open piping remaining in service.

3.3 RIGGING

A. Openings in building structures shall be planned to accommodate design scheme.

B. Alternative methods of equipment delivery may be offered and will be considered by Owner under specified restrictions of phasing and service requirements as well as structural integrity of the building.

C. All openings in the building shall be closed when not required for rigging operations to maintain proper environment in the facility for Owner operation and maintenance of service.

D. Contractor shall provide all facilities required to deliver specified equipment and place on foundations. Attachments to structures for rigging purposes and support of equipment on structures shall be Contractor's full responsibility.

E. Contractor shall check all clearances, weight limitations and shall provide a rigging plan designed by a Registered Professional Engineer. All modifications to structures, including reinforcement thereof, shall be at Contractor's cost, time and responsibility.

F. Rigging plan and methods shall be referred to OR for evaluation prior to actual work.

3.4 PIPE AND EQUIPMENT SUPPORTS

A. Where hanger spacing does not correspond with joist or rib spacing, use structural steel channels secured directly to joist and rib structure that will correspond to the required hanger spacing, and then suspend the equipment and piping from the channels. Holes shall be drilled or burned in structural steel ONLY with the prior written approval of the OR.

B. The use of chain pipe supports, wire or strap hangers; wood for blocking, stays and bracing, or hangers suspended from piping above shall not be permitted. Rusty products shall be replaced.

C. Hanger rods shall be used that are straight and vertical. Turnbuckles for vertical adjustments may be omitted where limited space prevents use. A minimum of 15 mm (1/2 inch) clearance between pipe or piping covering and adjacent work shall be provided.

D. For horizontal and vertical plumbing pipe supports, refer to the International Plumbing Code (IPC) and these specifications.

E. Overhead Supports:

1. The basic structural system of the building is designed to sustain the loads imposed by equipment and piping to be supported overhead.
2. Provide steel structural members, in addition to those shown, of adequate capability to support the imposed loads, located in accordance with the final approved layout of equipment and piping.
3. Tubing and capillary systems shall be supported in channel troughs.

F. Floor Supports:

1. Provide concrete bases, concrete anchor blocks and pedestals, and structural steel systems for support of equipment and piping. Concrete bases and structural systems shall be anchored and doweled to resist forces under operating and seismic conditions (if applicable) without excessive displacement or structural failure.
2. Bases and supports shall not be located and installed until equipment mounted thereon has been approved. Bases shall be sized to match equipment mounted thereon plus 50 mm (2 inch) excess on all edges. Structural drawings shall be reviewed for additional requirements. Bases shall be neatly finished and smoothed, shall have chamfered edges at the top, and shall be suitable for painting.
3. All equipment shall be shimmed, leveled, firmly anchored, and grouted with epoxy grout. Anchor bolts shall be placed in sleeves, anchored to the bases. Fill the annular space between sleeves and bolts with a grout material to permit alignment and realignment.
4. For seismic anchoring, refer to Section 13 05 41, SEISMIC RESTRAINT REQUIREMENTS FOR NON-STRUCTURAL COMPONENTS.

3.5 LUBRICATION

A. All equipment and devices requiring lubrication shall be lubricated prior to initial operation. All devices and equipment shall be field checked for proper lubrication.

B. All devices and equipment shall be equipped with required lubrication fittings. A minimum of 1 liter (1 quart) of oil and 0.45 kg (1 pound) of grease of manufacturer's recommended grade and type for each different application shall be provided. All materials shall be delivered to OR in unopened containers that are properly identified as to application.

C. A separate grease gun with attachments for applicable fittings shall be provided for each type of grease applied.

D. All lubrication points shall be accessible without disassembling equipment, except to remove access plates.

E. All lubrication points shall be extended to one side of the equipment.

3.6 PLUMBING SYSTEMS DEMOLITION

A. Rigging access, other than indicated in the drawings, shall be provided after approval for structural integrity by the OR. Such access shall be provided at no additional cost or time to the Owner. Where work is in an operating plant, approved protection from dust and debris shall be provided at all times for the safety of plant personnel and maintenance of plant operation and environment of the plant.

B. In an operating plant, cleanliness and safety shall be maintained. The plant shall be kept in an operating condition. Owner personnel will be carrying on their normal duties of operating, cleaning and maintaining equipment and plant operation. Work shall be confined to the immediate area concerned; maintain cleanliness and wet down demolished materials to eliminate dust. Dust and debris shall not be permitted to accumulate in the area to the detriment of plant operation. All flame cutting shall be performed to maintain the fire safety integrity of this plant. Adequate fire extinguishing facilities shall be available at all times. All work shall be performed in accordance with recognized fire protection standards including NFPA 51B. Inspections will be made by personnel of the facility, and the Contractor shall follow all directives of the OR with regard to rigging, safety, fire safety, and maintenance of operations.

C. Unless specified otherwise, all piping, wiring, conduit, and other devices associated with the equipment not re-used in the new work shall be completely removed from Owner property per Section 01 74 19, CONSTRUCTION WASTE MANAGEMENT. This includes all concrete equipment pads, pipe, valves, fittings, insulation, and all hangers including the top connection and any fastenings to building structural systems. All openings shall be sealed after removal of equipment, pipes, ducts, and other penetrations in roof, walls, floors, in an approved manner and in accordance with plans and specifications where specifically covered. Structural integrity of the building system shall be maintained. Reference shall also be made to the drawings and specifications of the

other disciplines in the project for additional facilities to be demolished or handled.

D. All valves including gate, globe, ball, butterfly and check, all pressure gauges and thermometers with wells shall remain Owner property and shall be removed and delivered to OR and stored as directed. The Contractor shall remove all other material and equipment, devices and demolition debris under these plans and specifications. Such material shall be removed from Owner property expeditiously and shall not be allowed to accumulate. Coordinate with the OR and Infection Control.

E. Asbestos Insulation Removal: Conform to Section 02 82 11, TRADITIONAL ASBESTOS ABATEMENT.

3.7 CLEANING AND PAINTING

A. Prior to final inspection and acceptance of the plant and facilities for beneficial use by the Owner, the plant facilities, equipment and systems shall be thoroughly cleaned and painted. Refer to Section 09 91 00, PAINTING.

B. In addition, the following special conditions apply:

1. Cleaning shall be thorough. Solvents, cleaning materials and methods recommended by the manufacturers shall be used for the specific tasks. All rust shall be removed prior to painting and from surfaces to remain unpainted. Scratches, scuffs, and abrasions shall be repaired prior to applying prime and finish coats.
2. The following Material and Equipment shall NOT be painted:
   a. Motors, controllers, control switches, and safety switches.
   b. Control and interlock devices.
   c. Regulators.
   d. Pressure reducing valves.
   e. Control valves and thermostatic elements.
   f. Lubrication devices and grease fittings.
   g. Copper, brass, aluminum, stainless steel and bronze surfaces.
   h. Valve stems and rotating shafts.
   i. Pressure gauges and thermometers.
   j. Glass.
   k. Name plates.
3. Control and instrument panels shall be cleaned and damaged surfaces repaired. Touch-up painting shall be made with matching paint type and color obtained from manufacturer or computer matched.

4. Pumps, motors, steel and cast-iron bases, and coupling guards shall be cleaned, and shall be touched-up with the same paint type and color as utilized by the pump manufacturer.
5. Temporary Facilities: Apply paint to surfaces that do not have existing finish coats per Section 09 91 00, Painting.
6. The final result shall be a smooth, even-colored, even-textured factory finish on all items. The entire piece of equipment shall be repainted, if necessary, to achieve this. Lead based paints shall not be used.

3.8 IDENTIFICATION SIGNS

A. Laminated plastic signs, with engraved lettering not less than 7 mm (3/16 inch) high, shall be provided that designates equipment function, for all equipment, switches, motor controllers, relays, meters, control devices, including automatic control valves. Nomenclature and identification symbols shall correspond to that used in maintenance manual, and in diagrams specified elsewhere. Attach by chain, adhesive, or screws.

B. Factory Built Equipment: Metal plate, securely attached, with name and address of manufacturer, serial number, model number, size, and performance data shall be placed on factory-built equipment.

C. Pipe Identification: Refer to Section 09 91 00, PAINTING.

3.9 STARTUP AND TEMPORARY OPERATION

A. Startup of equipment shall be performed as described in the equipment specifications. Vibration within specified tolerance shall be verified prior to extended operation. Temporary use of equipment is specified in Section 01 00 00, GENERAL REQUIREMENTS, Article, TEMPORARY USE OF MECHANICAL AND ELECTRICAL EQUIPMENT.

3.10 OPERATING AND PERFORMANCE TESTS

A. Prior to the final inspection, all required tests shall be performed as specified in Section 01 00 00, GENERAL REQUIREMENTS, Article, TESTS and submit the test reports and records to the OR.

B. Should evidence of malfunction in any tested system, or piece of equipment or component part thereof, occur during or as a result of tests, make proper corrections, repairs or replacements, and repeat tests at no additional cost to the Owner.

C. When completion of certain work or systems occurs at a time when final control settings and adjustments cannot be properly made to make performance tests, then conduct such performance tests and finalize

control settings during the first actual seasonal use of the respective systems following completion of work. Rescheduling of these tests shall be requested in writing to OR for approval.

D. Perform tests as required for commissioning provisions in accordance with Section 22 08 00, COMMISSIONING OF PLUMBING SYSTEMS and Section 01 91 00, GENERAL COMMISSIONING REQUIREMENTS.

3.11 OPERATION AND MAINTENANCE MANUALS

A. All new and temporary equipment and all elements of each assembly shall be included.

B. Data sheet on each device listing model, size, capacity, pressure, speed, horsepower, impeller size, and other information shall be included.

C. Manufacturer’s installation, maintenance, repair, and operation instructions for each device shall be included. Assembly drawings and parts lists shall also be included. A summary of operating precautions and reasons for precautions shall be included in the Operations and Maintenance Manual.

D. Lubrication instructions, type and quantity of lubricant shall be included.

E. Schematic diagrams and wiring diagrams of all control systems corrected to include all field modifications shall be included.

F. Set points of all interlock devices shall be listed.

G. Trouble-shooting guide for the control system troubleshooting shall be inserted into the Operations and Maintenance Manual.

H. The control system sequence of operation corrected with submittal review comments shall be inserted into the Operations and Maintenance Manual.

I. Emergency procedures for shutdown and startup of equipment and systems.

3.12 COMMISSIONING

A. Provide commissioning documentation in accordance with the requirements of Section 22 08 00, COMMISSIONING OF PLUMBING SYSTEMS.

B. Components provided under this section of the specification will be tested as part of a larger system.

3.13 DEMONSTRATION AND TRAINING

A. Provide services of manufacturer’s technical representative for 4 hours to instruct the personnel responsible in operation and maintenance of the system.

B. Submit training plans and instructor qualifications in accordance with the requirements of Section 22 08 00, COMMISSIONING OF PLUMBING SYSTEMS.

- - - E N D - - -

DIVISION 23 HEATING, VENTILATING & AIR CONDITIONING (HVAC)

SECTION 23 05 11
COMMON WORK RESULTS FOR HVAC

PART 1 - GENERAL

1.1 DESCRIPTION

A. The requirements of this Section apply to all sections of Division 23.

B. Definitions:

1. Exposed: Piping, ductwork, and equipment exposed to view in finished rooms.
2. Exterior: Piping, ductwork, and equipment exposed to weather be it temperature, humidity, precipitation, wind, or solar radiation.

C. Abbreviations/Acronyms:

1. ac: Alternating Current
2. AC: Air Conditioning
3. ACU: Air Conditioning Unit
4. ACR: Air Conditioning and Refrigeration
5. AI: Analog Input
6. AISI: American Iron and Steel Institute
7. AO: Analog Output
8. ASJ: All Service Jacket
9. AWG: American Wire Gauge
10. BACnet: Building Automation and Control Networking Protocol
11. BAg: Silver-Copper-Zinc Brazing Alloy
12. BAS: Building Automation System
13. BCuP: Silver-Copper-Phosphorus Brazing Alloy
14. bhp: Brake Horsepower
15. Btu: British Thermal Unit
16. Btu/h: British Thermal Unit Per Hour
17. CDA: Copper Development Association
18. C: Celsius
19. CD: Compact Disk
20. CFM: Cubic Foot Per Minute
21. CH: Chilled Water Supply
22. CHR: Chilled Water Return
23. CLR: Color
24. CO: Carbon Monoxide
25. OR: Owner’s Representative
26. CPD: Condensate Pump Discharge
27. CPM: Cycles Per Minute

28. CPVC: Chlorinated Polyvinyl Chloride
29. CRS: Corrosion Resistant Steel
30. CTPD: Condensate Transfer Pump Discharge
31. CTPS: Condensate Transfer Pump Suction
32. CW: Cold Water
33. CWP: Cold Working Pressure
34. CxA: Commissioning Agent
35. dB: Decibels
36. dB(A): Decibels (A weighted)
37. DDC: Direct Digital Control
38. DI: Digital Input
39. DO: Digital Output
40. DVD: Digital Video Disc
41. DN: Diameter Nominal
42. DWV: Drainage, Waste and Vent
43. EPDM: Ethylene Propylene Diene Monomer
44. EPT: Ethylene Propylene Terpolymer
45. ETO: Ethylene Oxide
46. F: Fahrenheit
47. FAR: Federal Acquisition Regulations
48. FD: Floor Drain
49. FED: Federal
50. FG: Fiberglass
51. FGR: Flue Gas Recirculation
52. FOS: Fuel Oil Supply
53. FOR: Fuel Oil Return
54. FSK: Foil-Scrim-Kraft facing
55. FWPD: Feedwater Pump Discharge
56. FWPS: Feedwater Pump Suction
57. GC: Chilled Glycol Water Supply
58. GCR: Chilled Glycol Water Return
59. GH: Hot Glycol Water Heating Supply
60. GHR: Hot Glycol Water Heating Return
61. gpm: Gallons Per Minute
62. HDPE: High Density Polyethylene
63. Hg: Mercury
64. HOA: Hands-Off-Automatic
65. hp: Horsepower

66. HPS: High Pressure Steam (414 kPa (60 psig) and above)
67. HPR: High Pressure Steam Condensate Return
68. HW: Hot Water
69. HWH: Hot Water Heating Supply
70. HWHR: Hot Water Heating Return
71. Hz: Hertz
72. ID: Inside Diameter
73. IPS: Iron Pipe Size
74. kg: Kilogram
75. klb: 1000 lb
76. kPa: Kilopascal
77. lb: Pound
78. lb/hr: Pounds Per Hour
79. L/s: Liters Per Second
80. L/min: Liters Per Minute
81. LPS: Low Pressure Steam (103 kPa (15 psig) and below)
82. LPR: Low Pressure Steam Condensate Gravity Return
83. MAWP: Maximum Allowable Working Pressure
84. MAX: Maximum
85. MBtu/h: 1000 Btu/h
86. MBtu: 1000 Btu
87. MED: Medical
88. m: Meter
89. MFG: Manufacturer
90. mg: Milligram
91. mg/L: Milligrams Per Liter
92. MIN: Minimum
93. MJ: Megajoules
94. ml: Milliliter
95. mm: Millimeter
96. MPS: Medium Pressure Steam (110 kPa (16 psig) through 414 kPa (60 psig))
97. MPR: Medium Pressure Steam Condensate Return
98. MW: Megawatt
99. NC: Normally Closed
100. NF: Oil Free Dry (Nitrogen)
101. Nm: Newton Meter
102. NO: Normally Open

103. NOx: Nitrous Oxide
104. NPT: National Pipe Thread
105. NPS: Nominal Pipe Size
106. OD: Outside Diameter
107. OSD: Open Sight Drain
108. OS&Y: Outside Stem and Yoke
109. PC: Pumped Condensate
110. PID: Proportional-Integral-Differential
111. PLC: Programmable Logic Controllers
112. PP: Polypropylene
113. PPE: Personal Protection Equipment
114. ppb: Parts Per Billion
115. ppm: Parts Per Million
116. PRV: Pressure Reducing Valve \
117. PSIA: Pounds Per Square Inch Absolute
118. psig: Pounds Per Square Inch Gauge
119. PTFE: Polytetrafluoroethylene
120. PVC: Polyvinyl Chloride
121. PVDC: Polyvinylidene Chloride Vapor Retarder Jacketing, White
122. PVDF: Polyvinylidene Fluoride
123. rad: Radians
124. RH: Relative Humidity
125. RO: Reverse Osmosis
126. rms: Root Mean Square
127. RPM: Revolutions Per Minute
128. RS: Refrigerant Suction
129. RTD: Resistance Temperature Detectors
130. RTRF: Reinforced Thermosetting Resin Fittings
131. RTRP: Reinforced Thermosetting Resin Pipe
132. SCFM: Standard Cubic Feet Per Minute
133. SPEC: Specification
134. SPS: Sterile Processing Services
135. STD: Standard
136. SDR: Standard Dimension Ratio
137. SUS: Saybolt Universal Second
138. SW: Soft water
139. SWP: Steam Working Pressure
140. TAB: Testing, Adjusting, and Balancing

141. TDH: Total Dynamic Head
142. TEFC: Totally Enclosed Fan-Cooled
143. TFE: Tetrafluoroethylene
144. THERM: 100,000 Btu
145. THHN: Thermoplastic High-Heat Resistant Nylon Coated Wire
146. THWN: Thermoplastic Heat & Water-Resistant Nylon Coated Wire
147. T/P: Temperature and Pressure
148. USDA: U.S. Department of Agriculture
149. V: Volt
150. VAC: Vacuum
151. VAC: Voltage in Alternating Current
152. VR: Vacuum condensate return
153. WCB: Wrought Carbon Steel, Grade B
154. WG: Water Gauge or Water Column
155. WOG: Water, Oil, Gas

1.2 RELATED WORK

A. Section 01 00 00, GENERAL REQUIREMENTS.
B. Section 01 33 23, SHOP DRAWINGS, PRODUCT DATA, AND SAMPLES.
C. Section 01 74 19, CONSTRUCTION WASTE MANAGEMENT.
D. Section 01 81 13, SUSTAINABLE CONSTRUCTION REQUIREMENTS.
E. Section 01 91 00, GENERAL COMMISSIONING REQUIREMENTS.
F. Section 02 82 11, TRADITIONAL ASBESTOS ABATEMENT.
G. Section 03 30 00, CAST-IN-PLACE CONCRETE.
H. Section 05 50 00, METAL FABRICATIONS.
I. Section 07 84 00, FIRESTOPPING.
J. Section 07 92 00, JOINT SEALANTS.
K. Section 09 91 00, PAINTING.
L. Section 13 05 41, SEISMIC RESTRAINT REQUIREMENTS FOR NON-STRUCTURAL COMPONENTS.
M. Section 23 05 12, GENERAL MOTOR REQUIREMENTS FOR HVAC .
N. Section 23 05 41, NOISE AND VIBRATION CONTROL FOR HVAC PIPING and EQUIPMENT.
O. Section 23 05 93, TESTING, ADJUSTING, AND BALANCING FOR HVAC.
P. Section 23 07 11, HVAC INSULATION.
Q. Section 23 08 00, COMMISSIONING OF HVAC SYSTEMS.
R. Section 23 09 23, DIRECT-DIGITAL CONTROL SYSTEM FOR HVAC.

.

1.3 APPLICABLE PUBLICATIONS

A. The publications listed below form a part of this specification to the extent referenced. The publications are referenced in the text by the basic designation only. Where conflicts occur these specifications and the CODE standard will govern.

B. Air Movement and Control Association (AMCA):

410-//1996//.....Recommended Safety Practices for Users and Installers of Industrial and Commercial Fans

C. American Society of Mechanical Engineers (ASME):

B31.1-//2018//.....Power Piping

B31.9-//2014//.....Building Services Piping

ASME Boiler and Pressure Vessel Code:

BPVC Section IX-//2019// Welding, Brazing, and Fusing Qualifications

D. American Society for Testing and Materials (ASTM):

A36/A36M-//2014//.....Standard Specification for Carbon Structural Steel

A575-//1996(R2018)//....Standard Specification for Steel Bars, Carbon, Merchant Quality, M-Grades

E. Association for Rubber Products Manufacturers (ARPM):

IP-20-//2015//.....Specifications for Drives Using Classical V-Belts and Sheaves

IP-21-//2016//.....Specifications for Drives Using Double-V (Hexagonal) Belts

IP-24-//2016//.....Specifications for Drives Using Synchronous Belts

IP-27-//2015//.....Specifications for Drives Using Curvilinear Toothed Synchronous Belts

F. Manufacturers Standardization Society (MSS) of the Valve and Fittings Industry, Inc.:

SP-58-//2018//.....Pipe Hangers and Supports-Materials, Design, Manufacture, Selection, Application, and Installation

SP-127-//2014a//.....Bracing for Piping Systems: Seismic–Wind–Dynamic Design, Selection, and Application

G. National Fire Protection Association (NFPA):

70-//2017//.....National Electrical Code (NEC)

101-//2018//.....Life Safety Code

1.4 SUBMITTALS

A. Submittals, including number of required copies, shall be submitted in accordance with Section 01 33 23, SHOP DRAWINGS, PRODUCT DATA, AND SAMPLES.

B. Information and material submitted under this section shall be marked "SUBMITTED UNDER SECTION 23 05 11, COMMON WORK RESULTS FOR HVAC", with applicable paragraph identification.

C. If the project is phased submit complete phasing plan/schedule with manpower levels prior to commencing work. The phasing plan shall be detailed enough to provide milestones in the process that can be verified.

D. Contractor shall make all necessary field measurements and investigations to assure that the equipment and assemblies will meet contract requirements, and all equipment that requires regular maintenance, calibration, etc are accessable from the floor or permanent work platform. It is the Contractor's responsibility to ensure all submittals meet the Owner specifications and requirements and it is assumed by the Owner that all submittals do meet the Owner specifications unless the Contractor has requested a variance in writing and approved by Owner's Representative prior to the submittal. If at any time during the project it is found that any item does not meet the Owner specifications and there was no variance approval the Contractor shall correct at no additional cost or time to the Owner even if a submittal was approved.

E. If equipment is submitted which differs in arrangement from that shown, provide documentation proving equivalent performance, design standards and drawings that show the rearrangement of all associated systems. Additionally, any impacts on ancillary equipment or services such as foundations, piping, and electrical shall be the Contractor's responsibility to design, supply, and install at no additional cost or time to the Owner. Owner approval will be given only if all features of the equipment and associated systems, including accessibility, are equivalent to that required by the contract.

F. Prior to submitting shop drawings for approval, Contractor shall certify in writing that manufacturers of all major items of equipment have each reviewed contract documents, and have jointly coordinated and properly integrated their equipment and controls to provide a complete and efficient installation.

G. Submittals and shop drawings for interdependent items, containing applicable descriptive information, shall be furnished together. Coordinate and properly integrate materials and equipment to provide a completely compatible and efficient installation.

H. Samples: Samples will not be required, except for insulation or where materials offered differ from specification requirements. Samples shall be accompanied by full description of characteristics different from specification. The Contractor may submit samples of additional material at the Contractor's option; however, if additional samples of materials are submitted later, pursuant to Owner request, adjustment in contract price and time will be made.

I. Mock-ups: Mock-ups are required for critical items and typical component installations replicated numerous times throughout the project as indicated in the individual Division 23 sections. The Owner’s Representative and Facility representatives shall review and approve the mock-up prior to installation of additional applicable components.

J. Coordination/Shop Drawings:

1. Submit complete consolidated and coordinated shop drawings for all new systems, and for existing systems that are in the same areas.
2. The coordination/shop drawings shall include plan views, elevations and sections of all systems and shall be on a scale of not less than 1:32 (3/8-inch equal to one foot). Clearly identify and dimension the proposed locations of the principal items of equipment. The drawings shall clearly show locations and adequate clearance for all equipment, piping, valves, control panels and other items. Show the access means for all items requiring access for operations and maintenance. Provide detailed coordination/shop drawings of all piping and duct systems. The drawings should include all lockout/tagout points for all energy/hazard sources for each piece of equipment. Coordinate lockout/tagout procedures and practices with local requirements.
3. Do not install equipment foundations, equipment or piping until coordination/shop drawings have been approved.
4. In addition, for HVAC systems, provide details of the following:

a. Mechanical equipment rooms.

b. Hangers, inserts, supports, and bracing.
c. Pipe sleeves.
d. Duct or equipment penetrations of floors, walls, ceilings, or roofs.

K. Manufacturer's Literature and Data: Include full item description and optional features and accessories. Include dimensions, weights, materials, applications, standard compliance, model numbers, size, and capacity. Submit under the pertinent section rather than under this section.
1. Submit belt drive with the driven equipment. Submit selection data for specific drives when requested by the Owner’s Representative.
2. Submit electric motor data and variable speed drive data with the driven equipment.
3. Equipment and materials identification.
4. Fire-stopping materials.
5. Hangers, inserts, supports and bracing. Provide complete stress analysis for variable spring and constant support hangers.
6. Wall, floor, and ceiling plates.

L. Rigging Plan: Provide documentation of the capacity and weight of the rigging and equipment intended to be used. The plan shall include the path of travel of the load, the staging area and intended access, and qualifications of the operator and signal person.

M. HVAC Maintenance Data and Operating Instructions:
1. Maintenance and operating manuals in accordance with Section 01 00 00, GENERAL REQUIREMENTS, Article, INSTRUCTIONS, for systems and equipment.
2. Complete operating and maintenance manuals including wiring diagrams, technical data sheets, information for ordering replacement parts, and troubleshooting guide:
a. Include complete list indicating all components of the systems.
b. Include complete diagrams of the internal wiring for each item of equipment.
c. Diagrams shall have their terminals identified to facilitate installation, operation and maintenance.
3. Provide a listing of recommended replacement parts for keeping in stock supply, including sources of supply, for equipment. Include in the listing belts for equipment: Belt manufacturer, model

number, size and style, and distinguished whether of multiple belt sets.

N. Provide copies of approved HVAC equipment submittals to the TAB Subcontractor.

O. Completed System Readiness Checklist provided by the Owner Representative and completed by the Contractor, signed by a qualified technician and dated on the date of completion, in accordance with the requirements of Section 23 08 00, COMMISSIONING OF HVAC SYSTEMS.

P. Submit training plans and instructor qualifications in accordance with the requirements of Section 23 08 00, COMMISSIONING OF HVAC SYSTEMS.

1.5 QUALITY ASSURANCE

A. Mechanical, electrical and associated systems shall be safe, reliable, efficient, durable, easily and safely operable and maintainable, easily and safely accessible, and in compliance with applicable codes as specified. The systems shall be comprised of high quality institutional-class and industrial-class products of manufacturers that are experienced specialists in the required product lines. All construction firms and personnel shall be experienced and qualified specialists in industrial and institutional HVAC.

B. Flow Rate Tolerance for HVAC Equipment: Section 23 05 93, TESTING, ADJUSTING, AND BALANCING FOR HVAC.

C. Equipment Vibration Tolerance:

1. Refer to Section 23 05 41, NOISE AND VIBRATION CONTROL FOR HVAC PIPING and EQUIPMENT. Equipment shall be factory-balanced to this tolerance and re-balanced on site, as necessary.
2. After HVAC air balance work is completed and permanent drive sheaves are in place, perform field mechanical balancing and adjustments required to meet the specified vibration tolerance.

D. Products Criteria:

1. Standard Products: Material and equipment shall be the standard products of a manufacturer regularly engaged in the manufacture of the products for at least 3 years (or longer as specified elsewhere). The design, model and size of each item shall have been in satisfactory and efficient operation on at least three installations for approximately three years. However, digital electronics devices, software and systems such as controls, instruments, computer work station, shall be the current generation of technology and basic design that has a proven

satisfactory service record of at least three years. See other specification sections for any exceptions and/or additional requirements.

2. Refer to all other sections for quality assurance requirements for systems and equipment specified therein.
3. All items furnished shall be free from defects that would adversely affect the performance, maintainability and appearance of individual components and overall assembly.
4. The products and execution of work specified in Division 33 shall conform to the referenced codes and standards as required by the specifications. Local codes and amendments shall be enforced, along with requirements of local utility companies. The most stringent requirements of these specifications, local codes, or utility company requirements shall always apply. Any conflicts shall be brought to the attention of the Owner’s Representative.
5. Multiple Units: When two or more units of materials or equipment of the same type or class are required, these units shall be of the same manufacturer and model number, or if different models are required they shall be of the same manufacturer and identical to the greatest extent possible (i.e., same model series).
6. Assembled Units: Performance and warranty of all components that make up an assembled unit shall be the responsibility of the manufacturer of the completed assembly.
7. Nameplates: Nameplate bearing manufacturer's name or identifiable trademark shall be securely affixed in a conspicuous place on equipment, or name or trademark cast integrally with equipment, stamped or otherwise permanently marked on each item of equipment.
8. Use of asbestos products or equipment or materials containing asbestos is prohibited.

E. HVAC Equipment Service Providers: Service providers shall be authorized and trained by the manufacturers of the equipment supplied. These providers shall be capable of responding onsite and provide acceptable service to restore equipment operations within 4 hours of receipt of notification by phone, e-mail or fax in event of an emergency, such as the shutdown of equipment; or within 24 hours in a non-emergency. Submit names, mail and e-mail addresses and phone numbers of service personnel and companies providing service under these conditions for (as applicable to the project): fans, air handling units, chillers,

cooling towers, control systems, pumps, critical instrumentation, computer workstation and programming.

F. HVAC Mechanical Systems Welding: Before any welding is performed, Contractor shall submit a certificate certifying that welders comply with the following requirements:
   1. Qualify welding processes and operators for piping according to ASME BPVC Section IX. Provide proof of current certification.
   2. Comply with provisions of ASME B31 series "Code for Pressure Piping".
   3. Certify that each welder and welding operator has passed American Welding Society (AWS) qualification tests for the welding processes involved, and that certification is current.
   4. All welds shall be stamped according to the provisions of the AWS or ASME as required herein and by the associated code.

G. Manufacturer's Recommendations: Where installation procedures or any part thereof are required to be in accordance with the recommendations of the manufacturer of the material being installed, printed copies of these recommendations shall be furnished to the Owner’s Representative with submittals. Installation of the item will not be allowed to proceed until the recommendations are received. Failure to furnish these recommendations can be cause for rejection of the material and removal by the Contractor and no additional cost or time to the Owner.

H. Execution (Installation, Construction) Quality:
   1. Apply and install all items in accordance with manufacturer's written instructions. Refer conflicts between the manufacturer's instructions and the contract documents to the Owner’s Representative for resolution. Provide written hard copies and computer files on CD or DVD of manufacturer’s installation instructions to the Owner’s Representative with submittals prior to commencing installation of any item. Installation of the item will not be allowed to proceed until the recommendations are received and approved by the Owner’s Representative. Failure to furnish these recommendations is a cause for rejection of the material.
   2. All items that require access, such as for operating, cleaning, servicing, maintenance, and calibration, shall be easily and safely accessible by persons standing at floor level, or standing on permanent platforms, without the use of portable ladders.

Examples of these items include, but are not limited to, all types of valves, filters and strainers, transmitters, control devices. Prior to commencing installation work, refer conflicts between this requirement and contract documents to the Owner's Representative for resolution. Failure of the Contractor to resolve, or point out any issues will result in the Contractor correcting at no additional cost or time to the Owner's Representative.

3. Complete coordination/shop drawings shall be required in accordance with Article, SUBMITTALS. Construction work shall not start on any system until the coordination/shop drawings have been approved by Owner's representative.
4. Workmanship/craftsmanship will be of the highest quality and standards. The Ownerreserves the right to reject any work based on poor quality of workmanship this work shall be removed and done again at no additional cost or time to the Owner's Representative.

I. Upon request by Owner's Representative provide lists of previous installations for selected items of equipment. Include contact persons who will serve as references, with current telephone numbers and e-mail addresses.

J. Guaranty: Warranty of Construction, FAR Clause 52.246-21.

1.6 DELIVERY, STORAGE AND HANDLING

A. Protection of Equipment:

1. Equipment and material placed on the job site shall remain in the custody of the Contractor until phased acceptance, whether or not the Owner's Representative has reimbursed the Contractor for the equipment and material. The Contractor is solely responsible for the protection of such equipment and material against any damage or theft.
2. Large equipment such as boilers, chillers, cooling towers, fans, and air handling units if shipped on open trailer trucks shall be covered with shrink on plastics or water proof tarpaulins that provide protection from exposure to rain, road salts and other transit hazards. Protection shall be kept in place until equipment is moved into a building or installed as designed.
3. Repair damaged equipment in first class, new operating condition and appearance; or, replace same as determined and directed by the

Owner’s Representative. Such repair or replacement shall be at no additional cost or time to the Owner’s Representativeernment.

4. Protect interiors of new equipment and piping systems against entry of foreign matter. Clean both inside and outside before painting or placing equipment in operation.
5. Existing equipment and piping being worked on by the Contractor shall be under the custody and responsibility of the Contractor and shall be protected as required for new work.
6. Protect plastic piping and tanks from ultraviolet light (sunlight).

B. Cleanliness of Piping and Equipment Systems:

1. Exercise care in storage and handling of equipment and piping material to be incorporated in the work. Remove debris arising from cutting, threading and welding of piping.
2. Piping systems shall be flushed, blown or pigged as necessary to deliver clean systems.
3. Clean interior of all tanks prior to delivery for beneficial use by the Owner’s Representativeernment.
4. Contractor shall be fully responsible for all costs, damage, and delay arising from failure to provide clean systems.

1.7 AS-BUILT DOCUMENTATION

A. Submit manufacturer’s literature and data updated to include submittal review comments and any equipment substitutions.

B. Submit operation and maintenance data updated to include submittal review comments, Owner approved substitutions and construction revisions shall be in electronic version on CD or DVD inserted into a three-ring binder. All aspects of system operation and maintenance procedures, including applicable piping isometrics, wiring diagrams of all circuits, a written description of system design, control logic, and sequence of operation shall be included in the operation and maintenance manual. The operations and maintenance manual shall include troubleshooting techniques and procedures for emergency situations. Notes on all special systems or devices shall be included. A List of recommended spare parts (manufacturer, model number, and quantity) shall be furnished. Information explaining any special knowledge or tools the owner will be required to employ shall be inserted into the As-Built documentation.

C. The installing Contractor shall maintain as-built drawings of each completed phase for verification; and, shall provide the complete set at the time of final systems certification testing. Should the installing Contractor engage the testing company to provide as-built or any portion thereof, it shall not be deemed a conflict of interest or breach of the 'third party testing company' requirement. Provide record drawings as follows:
   1. Red-lined, hand-marked drawings are to be provided, with one paper copy and a scanned PDF version of the hand-marked drawings provided on CD or DVD.
   2. As-built drawings are to be provided, with a copy of them on AutoCAD provided on CD or DVD. The CAD drawings shall use multiple line layers with a separate individual layer for each system.

D. The as-built drawings shall indicate the location and type of all lockout/tagout points for all energy sources for all equipment and pumps to include breaker location and numbers, valve tag numbers, etc. Coordinate lockout/tagout procedures and practices with local Ownerrequirements.

E. Certification documentation shall be provided to Owner's Representative 21 working days prior to submitting the request for final inspection. The documentation shall include all test results, the names of individuals performing work for the testing agency on this project, detailed procedures followed for all tests, and provide documentation/certification that all results of tests were within limits specified. Test results shall contain written sequence of test procedure with written test results annotated at each step along with the expected outcome or setpoint. The results shall include all readings, including but not limited to data on device (make, model and performance characteristics_), normal pressures, switch ranges, trip points, amp readings, and calibration data to include equipment serial numbers or individual identifications, etc.

1.8 JOB CONDITIONS – WORK IN EXISTING BUILDING

A. Building Operation: Owner's Representativeemployees will be continuously operating and managing all facilities, including temporary facilities.

B. Maintenance of Service: Schedule all work to permit continuous service as required by the Owner.

C. Phasing of Work: Comply with all requirements shown on contract documents. Contractor shall submit a complete detailed phasing plan/schedule with manpower levels prior to commencing work. The phasing plan shall be detailed enough to provide milestones in the process that can be verified.

D. Building Working Environment: Maintain the architectural and structural integrity of the building and the working environment at all times. Maintain the interior of building at 18 degrees C (65 degrees F) minimum. Limit the opening of doors, windows or other access openings to brief periods as necessary for rigging purposes. Storm water or ground water leakage is prohibited. Provide daily clean-up of construction and demolition debris on all floor surfaces and on all equipment being operated by Owner. Maintain all egress routes and safety systems/devices.

E. Acceptance of Work for OwnerOperation: As new equipment, systems and facilities are made available for operation and these items are deemed of beneficial use to the Owner's Representative inspections will be made and tests will be performed. Based on the inspections, a list of contract deficiencies will be issued to the Contractor. After correction of deficiencies as necessary for beneficial use, the Contracting Officer will process necessary acceptance and the equipment will then be under the control and operation of personnel.

SPEC WRITER NOTE: Delete the following paragraph if not applicable to project.

PART 2 - PRODUCTS

2.1 FACTORY-ASSEMBLED PRODUCTS

A. Provide maximum standardization of components to reduce spare part requirements.

B. Performance and warranty of all components that make up an assembled unit shall be the responsibility of the manufacturer of the completed assembly.

1. All components of an assembled unit need not be products of same manufacturer.
2. Constituent parts that are alike shall be products of a single manufacturer.
3. Components shall be compatible with each other and with the total assembly for intended service.

4. Contractor shall guarantee performance of assemblies of components, and shall repair or replace elements of the assemblies as required to deliver specified performance of the complete assembly.

C. Equipment and components of equipment shall bear manufacturer's name and trademark, model number, serial number and performance data on a nameplate securely affixed in a conspicuous place, or cast integral with, stamped or otherwise permanently marked upon the components of the equipment.

D. Major items of equipment, which serve the same function, must be the same make and model. Exceptions must be approved by the Owner, but may be permitted if performance requirements cannot be met.

2.2 COMPATIBILITY OF RELATED EQUIPMENT

A. Equipment and materials installed shall be compatible in all respects with other items being furnished and with existing items so that the result will be a complete and fully operational plant that conforms to contract requirements.

2.3 V-BELT DRIVES

A. Type: ARPM standard V-belts with proper motor pulley and driven sheave. Belts shall be constructed of reinforced cord and rubber.

B. Dimensions, rating and selection standards: ARPM IP-20 and ARPM IP-21.

C. Minimum Horsepower Rating: Motor horsepower plus recommended ARPM service factor (not less than 20 percent) in addition to the ARPM allowances for pitch diameter, center distance, and arc of contact.

D. Maximum Speed: 25 m/s (5000 feet per minute).

E. Adjustment Provisions: For alignment and ARPM standard allowances for installation and take-up.

F. Drives may utilize a single V-Belt (any cross section) when it is the manufacturer's standard.

G. Multiple Belts: Matched to ARPM specified limits by measurement on a belt measuring fixture. Seal matched sets together to prevent mixing or partial loss of sets. Replacement, when necessary, shall be an entire set of new matched belts.

H. Sheaves and Pulleys:

1. Material: Pressed steel, or close-grained cast iron.
2. Bore: Fixed or bushing type for securing to shaft with keys.
3. Balanced: Statically and dynamically.
4. Groove spacing for driving and driven pulleys shall be the same.

I. Drive Types, Based on ARI 435:

1. Provide adjustable-pitch //or fixed-pitch// drive as follows:
   a. Fan speeds up to 1800 RPM: 7.5 kW (10 horsepower) and smaller.
   b. Fan speeds over 1800 RPM: 2.2 kW (3 horsepower) and smaller.
2. Provide fixed-pitch drives for drives larger than those listed above.
3. The final fan speeds required to just meet the system CFM and pressure requirements, without throttling the design air flow branch, shall be determined by adjustment of a temporary adjustable-pitch motor sheave or by fan law calculation if a fixed-pitch drive is used initially.

J. Final Drive Set: If adjustment is required beyond the capabilities of the factory drive set, the final drive set shall be provided as part of this contract at no additional cost or time to the Owner.

2.4 SYNCHRONOUS BELT DRIVES

A. Type: ARPM synchronous belts with proper motor pulley and driven sheave. Belts shall be constructed of reinforced cord and rubber.

B. Dimensions, rating and selection standards: ARPM IP-24 and ARPM IP-27.

C. Minimum Horsepower Rating: Motor horsepower plus recommended ARPM service factor (not less than 20 percent) in addition to the ARPM allowances for pitch diameter, center distance, and arc of contact.

D. Maximum Speed: 25 m/s (5000 feet per minute).

E. Adjustment Provisions: For alignment and ARPM standard allowances for installation and take-up.

F. Drives may utilize a single belt of manufacturer’s standard width for the application.

G. Multiple Belts: Matched to ARPM specified limits by measurement on a belt measuring fixture. Seal matched sets together to prevent mixing or partial loss of sets. Replacement, when necessary, shall be an entire set of new matched belts.

H. Sheaves and Pulleys:

1. Material: Pressed steel, or close-grained cast iron.
2. Bore: Fixed or bushing type for securing to shaft with keys.
3. Balanced: Statically and dynamically.

I. Final Drive Set: The final fan speeds required to just meet the system CFM and pressure requirements, without throttling the design air flow branch, shall be determined by fan law calculation. If adjustment is required beyond the capabilities of the factory drive set, the final

drive set shall be provided as part of this contract at no additional cost or time to the Owner .

2.5 DRIVE GUARDS

A. For machinery and equipment, provide guards as shown in AMCA 410 for belts, chains, couplings, pulleys, sheaves, shafts, gears and other moving parts regardless of height above the floor to prevent damage to equipment and injury to personnel. Drive guards may be excluded where motors and drives are inside factory-fabricated air handling unit casings.

B. Pump shafts and couplings shall be fully guarded by a sheet steel guard, covering coupling and shaft but not bearings. Material shall be minimum 16-gauge sheet steel; all edges shall be hemmed and ends shall be bent into flanges and the flanges shall be drilled and attached to pump base with minimum of four 6 mm (1/4 inch) bolts. Reinforce guard as necessary to prevent side play forcing guard onto couplings.

C. V-belt and sheave assemblies shall be totally enclosed, firmly mounted, non-resonant. Guard shall be an assembly of minimum 22-gauge sheet steel and expanded or perforated metal to permit observation of belts. 25 mm (1 inch) diameter hole shall be provided at each shaft centerline to permit speed measurement.

D. Materials: Sheet steel, expanded metal or wire mesh rigidly secured so as to be removable without disassembling pipe, duct, or electrical connections to equipment.

E. Access for Speed Measurement: 25 mm (1 inch) diameter hole at each shaft center.

2.6 LIFTING ATTACHMENTS

A. Provide equipment with suitable lifting attachments to enable equipment to be lifted in its normal position. Lifting attachments shall withstand any handling conditions that might be encountered, without bending or distortion of shape, such as rapid lowering and braking of load.

SPEC WRITER NOTE: Verify that special motor requirements when required, such as two-speed or explosion proof, are shown on the drawings in the equipment schedules.

2.7 ELECTRIC MOTORS

A. All material and equipment furnished and installation methods shall conform to the requirements of Section 23 05 12, GENERAL MOTOR

REQUIREMENTS FOR HVACProvide all electrical wiring, conduit, and devices necessary for the proper connection, protection and operation of the systems. Provide special energy efficient premium efficiency type motors as scheduled.

2.8 VARIABLE SPEED MOTOR CONTROLLERS

A. Coordinate variable speed motor controller communication protocol with Section 23 09 23, DIRECT-DIGITAL CONTROL SYSTEM FOR HVAC.

B. Provide variable speed motor controllers with or without a bypass contactor as indicated in contract drawings.

C. The combination of controller and motor shall be provided by the manufacturer of the driven equipment, such as pumps and fans, and shall be rated for 100 percent output performance. Multiple units of the same class of equipment, i.e. air handlers, fans, pumps, shall be product of a single manufacturer.

D. Motors shall be premium efficiency type and be approved by the motor controller manufacturer. The controller-motor combination shall be guaranteed to provide full motor nameplate horsepower in variable frequency operation. Both driving and driven motor/fan sheaves shall be fixed pitch.

E. Controller shall not add any current or voltage transients to the input ac power distribution system, DDC controls, sensitive medical equipment, etc., nor shall be affected from other devices on the ac power system.

2.9 EQUIPMENT AND MATERIALS IDENTIFICATION

A. Use symbols, nomenclature and equipment numbers specified, shown on the contract documents and shown in the maintenance manuals. Identification for piping is specified in Section 09 91 00, PAINTING.

B. Use symbols, nomenclature and equipment numbers specified, shown on the contract documents and shown in the maintenance manuals. In addition, provide bar code identification nameplate for all equipment which will allow the equipment identification code to be scanned into the system for maintenance and inventory tracking. Identification for piping is specified in Section 09 91 00, PAINTING.

C. Interior (Indoor) Equipment: Engraved nameplates, with letters not less than 5 mm (3/16 inch) high of brass with black-filled letters, or rigid black plastic with white letters specified in Section 09 91 00,

PAINTING permanently fastened to the equipment. Identify unit components such as coils, filters, fans, etc.

D. Exterior (Outdoor) Equipment: Brass nameplates, with engraved black filled letters, not less than 5 mm (3/16 inch) high riveted or bolted to the equipment.

E. Control Items: Label all instrumentation, temperature and humidity sensors, controllers and control dampers. Identify and label each item as they appear on the control diagrams.

F. Valve Tags and Lists:

1. HVAC and Mechanical Rooms: Provide for all valves other than for equipment in Section 23 82 00, CONVECTION HEATING AND COOLING UNITS and Section 23 36 00, AIR TERMNAL UNITS.
2. Valve tags: Engraved black filled numbers and letters not less than 15 mm (1/2 inch) high for number designation, and not less than 6 mm (1/4 inch) for service designation on 19-gauge 40 mm (1-1/2 inches) round brass disc, attached with brass "S" hook or brass chain.
3. Valve lists: Typed or printed plastic coated card(s), sized 215 mm (8-1/2 inches) by 275 mm (11 inches) showing tag number, valve function and area of control, for each service or system. Punch sheets for a 3-ring notebook.
4. Provide detailed plan for each floor of the building indicating the location and valve number for each valve. Identify location of each valve with a color-coded thumb tack in ceiling.

G. Ceiling Grid Labels:

1. 50 mm (2 inch) long by 15 mm (1/2 inch) wide by 0.025 mm (1 mil) thick UV resistant metalized polyester label with red border color and black custom lettering on white background interior. Peel and stick adhesive backing. Label and adhesive manufactured specifically for use in equipment inventory tagging.
2. Custom print labels with above ceiling HVAC equipment numbers.

2.10 FIRESTOPPING

A. Section 07 84 00, FIRESTOPPING specifies an effective barrier against the spread of fire, smoke and gases where penetrations occur for piping and ductwork. Refer to Section 23 07 11, HVAC INSULATION, for firestop pipe and duct insulation.

2.11 GALVANIZED REPAIR COMPOUND

A. Mil-P-21035B, paint form.

2.12 HVAC PIPE AND EQUIPMENT SUPPORTS AND RESTRAINTS

A. Vibration Isolators: Refer to Section 23 05 41, NOISE AND VIBRATION CONTROL FOR HVAC PIPING AND EQUIPMENT.

B. Supports for Roof Mounted Items:

1. Equipment: Equipment rails shall be galvanized steel, minimum 1.3 mm (18 gauge), with integral baseplate, continuous welded corner seams, factory installed 50 by 100 mm (2 by 4 inches) treated wood nailer, 1.3 mm (18 gauge) galvanized steel counter flashing cap with screws, built-in cant strip, (except for gypsum or tectum deck), minimum height 275 mm (11 inches). For surface insulated roof deck, provide raised cant strip to start at the upper surface of the insulation.
2. Pipe/duct pedestals: Provide a galvanized Unistrut channel welded to U-shaped mounting brackets which are secured to side of rail with galvanized lag bolts.

C. Pipe Supports: Comply with MSS SP-58. Type Numbers specified refer to this standard. For selection and application comply with MSS SP-58. Refer to Section 05 50 00, METAL FABRICATIONS, for miscellaneous metal support materials and prime coat painting requirements.

D. Attachment to Concrete Building Construction:

1. Concrete insert: MSS SP-58, Type 18.
2. Self-drilling expansion shields and machine bolt expansion anchors: Permitted in concrete not less than 100 mm (4 inches) thick when approved by the Owner’s Representative for each job condition.
3. Power-driven fasteners: Permitted in existing concrete or masonry not less than 100 mm (4 inches) thick when approved by the Owner’s Representative for each job condition.

E. Attachment to Steel Building Construction:

1. Welded attachment: MSS SP-58, Type 22.
2. Beam clamps: MSS SP-58, Types 20, 21, 28 or 29. Type 23 C-clamp may be used for individual copper tubing up to 23 mm (7/8 inch) outside diameter.

F. Attachment to existing structure: Support from existing floor/roof frame.

G. Hanger Rods: Hot-rolled steel, ASTM A36/A36M or ASTM A575 for allowable load listed in MSS SP-58. For piping, provide adjustment means for controlling level or slope. Types 13 or 15 turn-buckles shall provide

40 mm (1-1/2 inches) minimum of adjustment and incorporate locknuts. All-thread rods are acceptable.

H. Hangers Supporting Multiple Pipes (Trapeze Hangers): Galvanized, cold formed, lipped steel channel horizontal member, not less than 41 mm by 41 mm (1-5/8 inches by 1-5/8 inches), 2.7 mm (12 gauge), designed to accept special spring held, hardened steel nuts.

1. Allowable hanger load: Manufacturers rating less 91 kg (200 pounds).
2. Guide individual pipes on the horizontal member of every other trapeze hanger with 6 mm (1/4 inch) U-bolt fabricated from steel rod. Provide Type 40 insulation shield, secured by two 15 mm (1/2 inch) galvanized steel bands, or preinsulated calcium silicate shield for insulated piping at each hanger.

I. Supports for Piping Systems:

1. Select hangers sized to encircle insulation on insulated piping. Refer to Section 23 07 11, HVACINSULATION for insulation thickness. To protect insulation, provide Type 39 saddles for roller type supports or preinsulated calcium silicate shields. Provide Type 40 insulation shield or preinsulated calcium silicate shield at all other types of supports and hangers including those for preinsulated piping.
2. Piping Systems except High and Medium Pressure Steam (MSS SP-58):
   a. Standard clevis hanger: Type 1; provide locknut.
   b. Riser clamps: Type 8.
   c. Wall brackets: Types 31, 32 or 33.
   d. Roller supports: Type 41, 43, 44 and 46.
   e. Saddle support: Type 36, 37 or 38.
   f. Turnbuckle: Types 13 or 15. Preinsulate.
   g. U-bolt clamp: Type 24.
   h. Copper Tube:
      1) Hangers, clamps and other support material in contact with tubing shall be painted with copper colored epoxy paint, plastic coated or taped with non-adhesive isolation tape to prevent electrolysis.
      2) For vertical runs use epoxy painted or plastic-coated riser clamps.

3) For supporting tube to strut: Provide epoxy painted pipe straps for copper tube or plastic inserted vibration isolation clamps.
4) Insulated Lines: Provide pre-insulated calcium silicate shields sized for copper tube.

i. Supports for plastic piping: As recommended by the pipe manufacturer with black rubber tape extending one inch beyond steel support or clamp.

3. Convertor and Expansion Tank Hangers: May be Type 1 sized for the shell diameter. Insulation where required will cover the hangers.

J. Pre-insulated Calcium Silicate Shields:
1. Provide 360-degree water resistant high density 965 kPa (140 psig) compressive strength calcium silicate shields encased in galvanized metal.
2. Pre-insulated calcium silicate shields to be installed at the point of support during erection.
3. Shield thickness shall match the pipe insulation.
4. The type of shield is selected by the temperature of the pipe, the load it must carry, and the type of support it will be used with.

a. Shields for supporting chilled or cold water shall have insulation that extends a minimum of 25 mm (1 inch) past the sheet metal. Provide for an adequate vapor barrier in chilled lines.
b. The pre-insulated calcium silicate shield shall support the maximum allowable water filled span as indicated in MSS SP-58. To support the load, the shields may have one or more of the following features: structural inserts 4138 kPa (600 psig) compressive strength, an extra bottom metal shield, or formed structural steel (ASTM A36/A36M) wear plates welded to the bottom sheet metal jacket.

5. Shields may be used on steel clevis hanger type supports, roller supports or flat surfaces.

K. Seismic Restraint of Piping and Ductwork: Refer to Section 13 05 41, SEISMIC RESTRAINT REQUIREMENTS FOR NON-STRUCTURAL COMPONENTS. Comply with MSS SP-127.

2.13 PIPE PENETRATIONS

A. Install sleeves during construction for other than blocked out floor openings for risers in mechanical bays.

B. To prevent accidental liquid spills from passing to a lower level, provide the following:

1. For sleeves: Extend sleeve 25 mm (1 inch) above finished floor and provide sealant for watertight joint.
2. For blocked out floor openings: Provide 40 mm (1-1/2 inch) angle set in silicone adhesive around opening.
3. For drilled penetrations: Provide 40 mm (1-1/2 inch) angle ring or square set in silicone adhesive around penetration.

C. Penetrations through beams or ribs are prohibited, but may be installed in concrete beam flanges. Any deviation from these requirements must receive prior approval of Owner.

D. Sheet Metal, Plastic, or Moisture-resistant Fiber Sleeves: Provide for pipe passing through floors, interior walls, and partitions, unless brass or steel pipe sleeves are specifically called for below.

E. Cast Iron or Zinc Coated Pipe Sleeves: Provide for pipe passing through exterior walls below grade. Make space between sleeve and pipe watertight with a modular or link rubber seal. Seal shall be applied at both ends of sleeve.

F. Galvanized Steel or an alternate Black Iron Pipe with asphalt coating Sleeves: Provide for pipe passing through concrete beam flanges, except where brass pipe sleeves are called for. Provide sleeve for pipe passing through floor of mechanical rooms, laundry work rooms, and animal rooms above basement. Except in mechanical rooms, connect sleeve with floor plate.

G. Brass Pipe Sleeves: Provide for pipe passing through quarry tile, terrazzo or ceramic tile floors. Connect sleeve with floor plate.

H. Sleeves are not required for wall hydrants for fire department connections or in drywall construction.

I. Sleeve Clearance: Sleeve through floors, walls, partitions, and beam flanges shall be one inch greater in diameter than external diameter of pipe. Sleeve for pipe with insulation shall be large enough to accommodate the insulation. Interior openings shall be caulked tight with fire stopping material and sealant to prevent the spread of fire, smoke, and gases.

J. Sealant and Adhesives: Shall be as specified in Section 07 92 00, JOINT SEALANTS.

2.14 DUCT PENETRATIONS

A. Provide curbs for roof mounted piping, ductwork and equipment. Curbs shall be 450 mm (18 inches) high with continuously welded seams, built-in cant strip, interior baffle with acoustic insulation, curb bottom, hinged curb adapter.

B. Provide firestopping for openings through fire and smoke barriers, maintaining minimum required rating of floor, ceiling or wall assembly. See section 07 84 00, FIRESTOPPING.

2.15 SPECIAL TOOLS AND LUBRICANTS

A. Furnish, and turn over to the Owner’s Representative, tools not readily available commercially, that are required for disassembly or adjustment of equipment and machinery furnished.

B. Grease Guns with Attachments for Applicable Fittings: One for each type of grease required for each motor or other equipment.

C. Refrigerant Tools: Provide system charging/Evacuation equipment, gauges, fittings, and tools required for maintenance of furnished equipment.

D. Tool Containers: Hardwood or metal, permanently identified for intended service and mounted, or located, where directed by the Owner’s Representative.

E. Lubricants: A minimum of 0.95 L (1 quart) of oil, and 0.45 kg (1 pound) of grease, of equipment manufacturer's recommended grade and type, in unopened containers and properly identified as to use for each different application.

2.16 WALL, FLOOR AND CEILING PLATES

A. Material and Type: Chrome plated brass or chrome plated steel, one piece or split type with concealed hinge, with set screw for fastening to pipe, or sleeve. Use plates that fit tight around pipes, cover openings around pipes and cover the entire pipe sleeve projection.

B. Thickness: Not less than 2.4 mm (3/32 inch) for floor plates. For wall and ceiling plates, not less than 0.64 mm (0.025 inch) for up to 80 mm (3-inch pipe), 0.89 mm (0.035 inch) for larger pipe.

C. Locations: Use where pipe penetrates floors, walls and ceilings in exposed locations, in finished areas only. Provide a watertight joint in spaces where brass or steel pipe sleeves are specified.

2.17 ASBESTOS

A. Materials containing asbestos are prohibited.

PART 3 - EXECUTION

3.1 GENERAL

A. If an installation is unsatisfactory to the Owner’s Representative, the Contractor shall correct the installation at no additional cost or time to the Owner’s Representativeernment.

3.2 ARRANGEMENT AND INSTALLATION OF EQUIPMENT AND PIPING

A. Location of piping, sleeves, inserts, hangers, and equipment, access provisions shall be coordinated with the work of all trades. The coordination/shop drawings shall be submitted for review. Locate piping, sleeves, inserts, hangers, ductwork and equipment clear of windows, doors, openings, light outlets, and other services and utilities. Equipment coordination/shop drawings shall be prepared to coordinate proper location and personnel access of all facilities. The drawings shall be submitted for review. Follow manufacturer's published recommendations for installation methods not otherwise specified.

B. Operating Personnel Access and Observation Provisions: Select and arrange all equipment and systems to provide clear view and easy access, without use of portable ladders, for maintenance and operation of all devices including, but not limited to: all equipment items, valves, filters, strainers, transmitters, sensors, control devices. All gauges and indicators shall be clearly visible by personnel standing on the floor or on permanent platforms. Do not reduce or change maintenance and operating space and access provisions that are shown on the contract documents.

C. Equipment and Piping Support: Coordinate structural systems necessary for pipe and equipment support with pipe and equipment locations to permit proper installation.

D. Location of pipe sleeves, trenches and chases shall be accurately coordinated with equipment and piping locations.

E. Cutting Holes:

1. Cut holes through concrete and masonry by rotary core drill. Pneumatic hammer, impact electric, and hand or manual hammer type drill is prohibited, except as permitted by Owner’s Representative where working area space is limited.
2. Locate holes to avoid interference with structural members such as slabs, columns, ribs, beams or reinforcing. Holes shall be laid

out in advance and drilling done only after approval by Owner’s Representative. If the Contractor considers it necessary to drill through structural members, this matter shall be referred to Owner’s Representative for approval.

3. Do not penetrate membrane waterproofing.

F. Minor Piping: Generally, small diameter pipe runs from drips and drains, water cooling, and other service are not shown but must be provided.

G. Electrical Interconnection of Instrumentation or Controls: This generally not shown but must be provided. This includes interconnections of sensors, transmitters, transducers, control devices, control and instrumentation panels, instruments and computer workstations. Devices shall be located so they are easily accessible for testing, maintenance, calibration, etc. The Owner’s Representative has the final determination on what is accessible and what is not. Comply with NFPA 70.

H. Protection and Cleaning:

1. Equipment and materials shall be carefully handled, properly stored, and adequately protected to prevent damage before and during installation, in accordance with the manufacturer's recommendations and as approved by the Owner’s Representative. Damaged or defective items in the opinion of the Owner’s Representative, shall be replaced.
2. Protect all finished parts of equipment, such as shafts and bearings where accessible, from rust prior to operation by means of protective grease coating and wrapping. Close pipe openings with caps or plugs during installation. Tightly cover and protect fixtures and equipment against dirt, water chemical, or mechanical injury. At completion of all work thoroughly clean fixtures, exposed materials and equipment.

I. Concrete and Grout: Use concrete and non-shrink grout 20 MPa (3000 psig) minimum, specified in Section 03 30 00, CAST-IN-PLACE CONCRETE.

J. Install gauges, thermometers, valves and other devices with due regard for ease in reading or operating and maintaining said devices. Locate and position thermometers and gauges to be easily read by operator or staff standing on floor or walkway provided. Servicing shall not require dismantling adjacent equipment or pipe work.

K. Work in Existing Building:

1. Perform as specified in Article, OPERATIONS AND STORAGE AREAS, Article, ALTERATIONS, and Article, RESTORATION of the Section 01 00 00, GENERAL REQUIREMENTS for relocation of existing equipment, alterations and restoration of existing building(s).
2. As specified in Section 01 00 00, GENERAL REQUIREMENTS, Article, OPERATIONS AND STORAGE AREAS, make alterations to existing service piping at times that will least interfere with normal operation of the facility.

L. Work in Animal Research Areas: Seal all pipe and duct penetrations with silicone sealant to prevent entrance of insects.

M. Switchgear/Electrical Equipment Drip Protection: Every effort shall be made to eliminate the installation of pipe above electrical and data/telephone switchgear. If this is not possible, encase pipe in a second pipe with a minimum of joints. Installation of piping, ductwork, leak protection apparatus or other installations foreign to the electrical installation shall not be located in the space equal to the width and depth of the equipment and extending from to a height of 1.8 m (6 feet) above the equipment or to ceiling structure, whichever is lower (NFPA 70).

N. Inaccessible Equipment:

1. Where the Owner’s Representativedetermines that the Contractor has installed equipment not conveniently accessible for operation and maintenance or inspections, equipment shall be removed and reinstalled or remedial action performed as directed at no additional cost or time to the Owner’s Representativeernment.
2. The term "conveniently accessible" is defined as capable of being reached without the use of ladders, or without climbing or crawling under or over obstacles such as, but not limited to motors, fans, pumps, belt guards, transformers, high voltage lines, conduit and raceways, piping, hot surfaces, and ductwork. The Owner’s Representative has final determination on whether an installation meets this requirement or not.

3.3 TEMPORARY PIPING AND EQUIPMENT

A. Continuity of operation of existing facilities will generally require temporary installation or relocation of equipment and piping.

B. The Contractor shall provide all required facilities in accordance with the requirements of phased construction and maintenance of service. All

piping and equipment shall be properly supported, sloped to drain, operate without excessive stress, and shall be insulated where injury can occur to personnel by contact with operating facilities. The requirements of Article, ARRANGEMENT AND INSTALLATION OF EQUIPMENT AND PIPING apply.

C. Temporary facilities and piping shall be completely removed and any openings in structures sealed. Provide necessary blind flanges and caps to seal open piping remaining in service.

3.4 RIGGING

A. Design is based on application of available equipment. Openings in building structures are planned to accommodate design scheme.

B. Alternative methods of equipment delivery may be offered by Contractor and will be considered by Owner’s Representative under specified restrictions of phasing and maintenance of service requirements as well as structural integrity of the building.

C. Close all openings in the building when not required for rigging operations to maintain proper environment in the facility for Owner’s Representative operation and maintenance of service.

D. Contractor shall provide all facilities required to deliver specified equipment and place on foundations. Attachments to structures for rigging purposes and support of equipment on structures shall be Contractor's full responsibility. Upon request, the Owner’s Representative will check structure adequacy and advise Contractor of recommended restrictions.

E. Contractor shall check all clearances, weight limitations and shall offer a rigging plan designed by a Registered Professional Engineer. All modifications to structures, including reinforcement thereof, shall be at Contractor's cost, time and responsibility.

F. Follow approved rigging plan.

G. Restore building to original condition upon completion of rigging work.

3.5 PIPE AND EQUIPMENT SUPPORTS

A. Where hanger spacing does not correspond with joist or rib spacing, use structural steel channels designed by a structural engineer, secured directly to joist and rib structure that will correspond to the required hanger spacing, and then suspend the equipment and piping from the channels. Drill or burn holes in structural steel only with the prior approval of the Owner’s Representative.

B. Use of chain pipe supports; wire or strap hangers; wood for blocking, stays and bracing; or, hangers suspended from piping above are prohibited. Replace or thoroughly clean rusty products and paint with zinc primer.

C. Hanger rods shall be used that are straight and vertical. Turnbuckles for vertical adjustments may be omitted where limited space prevents use. Provide a minimum of 15 mm (1/2 inch) clearance between pipe or piping covering and adjacent work.

D. HVAC Horizontal Pipe Support Spacing: Refer to MSS SP-58. Provide additional supports at valves, strainers, in-line pumps and other heavy components. Provide a support within one foot of each elbow.

E. HVAC Vertical Pipe Supports:

1. Up to 150 mm (6-inch pipe), 9 m (30 feet) long, bolt riser clamps to the pipe below couplings, or welded to the pipe and rests supports securely on the building structure.
2. Vertical pipe larger than the foregoing, support on base elbows or tees, or substantial pipe legs extending to the building structure.

F. Overhead Supports:

1. The basic structural system of the building is designed to sustain the loads imposed by equipment and piping to be supported overhead.
2. Provide steel structural members, in addition to those shown, of adequate capability to support the imposed loads, located in accordance with the final approved layout of equipment and piping.
3. Tubing and capillary systems shall be supported in channel troughs.

G. Floor Supports:

1. Provide concrete bases, concrete anchor blocks and pedestals, and structural steel systems for support of equipment and piping. Concrete bases and structural systems shall be anchored and doweled to resist forces under operating and seismic conditions (if applicable) without excessive displacement or structural failure.
2. Bases and supports shall not be located and installed until equipment mounted thereon has been approved. Bases shall be sized to match equipment mounted thereon plus 50 mm (2 inch) excess on all edges. Chiller foundations shall have horizontal dimensions

that exceed chiller base frame dimensions by at least 150 mm (6 inches) on all sides. Structural contract documents shall be reviewed for additional requirements. Bases shall be neatly finished and smoothed, shall have chamfered edges at the top, and shall be suitable for painting.

3. All equipment shall be shimmed, leveled, firmly anchored, and grouted with epoxy grout. Anchor bolts shall be placed in sleeves, anchored to the bases. Fill the annular space between sleeves and bolts with a granular material to permit alignment and realignment.
4. For seismic anchoring, refer to Section 13 05 41, SEISMIC RESTRAINT REQUIREMENTS FOR NON-STRUCTURAL COMPONENTS.

3.6 MECHANICAL DEMOLITION

A. Rigging access, other than indicated on the contract documents, shall be provided by the Contractor after approval for structural integrity by the Owner. Such access shall be provided without additional cost or time to the Owner. Where work is in an operating plant, provide approved protection from dust and debris at all times for the safety of plant personnel and maintenance of plant operation and environment of the plant.

B. In an operating facility, maintain the operation, cleanliness and safety. Owner’s Representative personnel will be carrying on their normal duties of operating, cleaning and maintaining equipment and plant operation. Confine the work to the immediate area concerned; maintain cleanliness and wet down demolished materials to eliminate dust. Debris accumulated in the area to the detriment of plant operation is prohibited. Perform all flame cutting to maintain the fire safety integrity of this plant. Adequate fire extinguishing facilities shall be available at all times. Perform all work in accordance with recognized fire protection standards. Inspection will be made by personnel of the facility, and Contractor shall follow all directives of the Owner’s Representative with regard to rigging, safety, fire safety, and maintenance of operations.

C. Unless specified otherwise, all piping, wiring, conduit, and other devices associated with the equipment not re-used in the new work shall be completely removed from Owner’s property per Section 01 74 19, CONSTRUCTION WASTE MANAGEMENT. This includes all concrete pads, pipe, valves, fittings, insulation, and all hangers including the top

connection and any fastenings to building structural systems. All openings shall be sealed after removal of equipment, pipes, ducts, and other penetrations in roof, walls, floors, in an approved manner and in accordance with contract documents where specifically covered. Structural integrity of the building system shall be maintained. Reference shall also be made to the contract documents of the other disciplines in the project for additional facilities to be demolished or handled.

D. All indicated valves including gate, globe, ball, butterfly and check, all pressure gauges and thermometers with wells shall remain Owner's property and shall be removed and delivered to Owner's Representative and stored as directed. The Contractor shall remove all other material and equipment, devices and demolition debris under these contract documents. Such material shall be removed from Owner's property expeditiously and shall not be allowed to accumulate.

SPEC WRITER NOTE: Delete the following paragraph if there is no asbestos removal.

E. Asbestos Insulation Removal: Conform to Section 02 82 11, TRADITIONAL ASBESTOS ABATEMENT.

3.7 CLEANING AND PAINTING

A. Prior to final inspection and acceptance of the plant and facilities for beneficial use by the Owner the plant facilities, equipment and systems shall be thoroughly cleaned and painted. Refer to Section 09 91 00, PAINTING.

B. In addition, the following special conditions apply:

1. Cleaning shall be thorough. Solvents, cleaning materials and methods recommended by the manufacturers shall be used for the specific tasks. All rust shall be removed prior to painting and from surfaces to remain unpainted. Repair scratches, scuffs, and abrasions prior to applying prime and finish coats.
2. The following material and equipment shall not be painted:

a. Motors, controllers, control switches, and safety switches.
b. Control and interlock devices.
c. Regulators.
d. Pressure reducing valves.
e. Control valves and thermostatic elements.
f. Lubrication devices and grease fittings.

g. Copper, brass, aluminum, stainless steel and bronze surfaces.
h. Valve stems and rotating shafts.
i. Pressure gauges and thermometers.
j. Glass.
k. Nameplates.

3. Control and instrument panels shall be cleaned, damaged surfaces repaired, and shall be touched-up with matching paint obtained from panel manufacturer.
4. Pumps, motors, steel and cast-iron bases, and coupling guards shall be cleaned, and shall be touched-up with the same paint type and color as utilized by the pump manufacturer.
5. Temporary Facilities: Apply paint to surfaces that do not have existing finish coats. This may include painting exposed metals where hangers were removed or where equipment was moved or removed.
6. Paint shall withstand the following temperatures without peeling or discoloration:
   a. Condensate and Feedwater: 38 degrees C (100 degrees F) on insulation jacket surface and 121 degrees C (250 degrees F) on metal pipe surface.
   b. Steam: 52 degrees C (125 degrees F) on insulation jacket surface and 190 degrees C (374 degrees F) on metal pipe surface.
7. Final result shall be smooth, even-colored, even-textured factory finish on all items. Completely repaint the entire piece of equipment if necessary to achieve this.
8. Lead based paints are prohibited.

3.8 IDENTIFICATION SIGNS

A. Provide laminated plastic signs, with engraved lettering not less than 5 mm (3/16 inch) high, designating functions, for all equipment, switches, motor controllers, relays, meters, control devices, including automatic control valves. Nomenclature and identification symbols shall correspond to that used in maintenance manual, and in diagrams specified elsewhere. Attach by chain, adhesive, or screws.
B. Factory Built Equipment: Metal plate, securely attached, with name and address of manufacturer, serial number, model number, size, performance.
C. Pipe Identification: Refer to Section 09 91 00, PAINTING.

D. Attach ceiling grid label on ceiling grid location directly underneath above-ceiling air terminal, control system component, valve, filter unit, fan etc.

3.9 MOTOR AND DRIVES

A. Use synchronous belt drives only on equipment controlled by soft starters or variable frequency drive motor controllers without a bypass contactor. Use V-belt drives on all other applications.

B. Alignment of V-Belt Drives: Set driving and driven shafts parallel and align so that the corresponding grooves are in the same plane.

C. Alignment of Synchronous Belt Drives: Set driving and driven shafts parallel and align so that the corresponding pulley flanges are in the same plane.

D. Alignment of Direct-Connect Drives: Securely mount motor in accurate alignment so that shafts are per coupling manufacturer’s tolerances when both motor and driven machine are operating at normal temperatures.

3.10 LUBRICATION

A. All equipment and devices requiring lubrication shall be lubricated prior to initial operation. Field-check all devices for proper lubrication.

B. All devices and equipment shall be equipped with required lubrication fittings or devices. A minimum of 0.95 liter (1 quart) of oil and 0.45 kg (1 pound) of grease of manufacturer's recommended grade and type for each different application shall be provided; also provide 12 grease sticks for lubricated plug valves. Deliver all materials to Owner’s Representative in unopened containers that are properly identified as to application.

C. All lubrication points shall be accessible without disassembling equipment, except to remove access plates.

D. All lubrication points shall be extended to one side of the equipment.

3.11 STARTUP, TEMPORARY OPERATION AND TESTING

A. Perform tests as recommended by product manufacturer and listed standards and under actual or simulated operating conditions and prove full compliance with design and specified requirements. Tests of the various items of equipment shall be performed simultaneously with the system of which each item is an integral part.

B. When any defects are detected, correct defects and repeat test at no additional cost or time to the Owner.

C. The Commissioning Agent will observe startup and Contractor testing of selected equipment. Coordinate the startup and Contractor testing schedules with Owner's Representative and Commissioning Agent. Provide a minimum notice of 10 working days prior to startup and testing.

D. Startup of equipment shall be performed as described in equipment specifications. Vibration within specified tolerance shall be verified prior to extended operation. Temporary use of equipment is specified in Section 01 00 00, GENERAL REQUIREMENTS, Article, TEMPORARY USE OF MECHANICAL AND ELECTRICAL EQUIPMENT.

3.12 OPERATING AND PERFORMANCE TESTS

A. Prior to the final inspection, perform required tests as specified in Section 01 00 00, GENERAL REQUIREMENTS Article, TESTS, and in individual Division 23 specification sections and submit the test reports and records to the Owner's Representative.

B. Should evidence of malfunction in any tested system, or piece of equipment or component part thereof, occur during or as a result of tests, make proper corrections, repairs or replacements, and repeat tests at no additional cost or time to the Owner.

C. When completion of certain work or system occurs at a time when final control settings and adjustments cannot be properly made to make performance tests, then conduct such performance tests and finalize control settings for heating systems and for cooling systems respectively during first actual seasonal use of respective systems following completion of work. Rescheduling of these tests shall be requested in writing to Owner's Representative for approval.

D. No adjustments may be made during the acceptance inspection. All adjustments shall have been made by this point.

E. Perform tests as required for commissioning provisions in accordance with Section 23 08 00, COMMISSIONING OF HVAC SYSTEMS and Section 01 91 00, GENERAL COMMISSIONING REQUIREMENTS.

3.13 COMMISSIONING

A. Provide commissioning documentation in accordance with the requirements of Section 23 08 00, COMMISSIONING OF HVAC SYSTEMS.

B. Components provided under this section of the specification will be tested as part of a larger system.

3.14 DEMONSTRATION AND TRAINING

A. Provide services of manufacturer's technical representative for 4 hours to instruct each facility personnel responsible in operation and maintenance of the system.

B. Submit training plans and instructor qualifications in accordance with the requirements of Section 23 08 00, COMMISSIONING OF HVAC SYSTEMS.

- - - E N D - - -

SECTION 23 05 12
GENERAL MOTOR REQUIREMENTS FOR HVAC

PART 1 - GENERAL

1.1 DESCRIPTION

A. This section specifies the furnishing, installation and connection of motors for HVAC and steam generation equipment.

1.2 RELATED WORK

A. Section 01 00 00, GENERAL REQUIREMENTS.

B. Section 01 33 23, SHOP DRAWINGS, PRODUCT DATA, AND SAMPLES.

C. Section 01 81 13, SUSTAINABLE CONSTRUCTION REQUIREMENTS.

D. Section 01 91 00, GENERAL COMMISSIONING REQUIREMENTS.

E. Section 23 05 11, COMMON WORK RESULTS FOR HVAC.

F. Section 23 08 00, COMMISSIONING OF HVAC SYSTEMS.

G. Section 26 05 11, REQUIREMENTS FOR ELECTRICAL INSTALLATIONS.

1.3 APPLICABLE PUBLICATIONS

A. The publications listed below form a part of this specification to the extent referenced. The publications are referenced in the text by the basic designation only. Where conflicts occur these specifications and the VHA standard will govern.

B. American Bearing Manufacturers Association (ABMA):

9-//2015//.....Load Ratings and Fatigue Life for Ball Bearings

11-//2014//.....Load Ratings and Fatigue Life for Roller Bearings

C. American Society of Heating, Refrigerating and Air-Conditioning Engineers (ASHRAE):

90.1-//2013//.....Energy Efficient Design of New Buildings Except Low-Rise Residential Buildings

D. Institute of Electrical and Electronics Engineers (IEEE):

112-//2017//.....Standard Test Procedure for Polyphase Induction Motors and Generators

841-//2009//.....IEEE Standard for Petroleum and Chemical Industry-Premium-Efficiency, Severe-Duty, Totally Enclosed Fan-Cooled (TEFC) Squirrel Cage Induction Motors--Up to and Including 370 kW (500 hp)

E. National Electrical Manufacturers Association (NEMA):

MG 1-//2019//.....Motors and Generators

MG 2-//2014//.....Safety Standard for Construction and Guide for Selection, Installation and Use of Electric Motors and Generators

250-//2014//.....Enclosures for Electrical Equipment (1000 Volts Maximum)

F. National Fire Protection Association (NFPA):

70-//2014//.....National Electrical Code (NEC)

1.4 SUBMITTALS

A. Submittals, including number of required copies, shall be submitted in accordance with Section 01 33 23, SHOP DRAWINGS, PRODUCT DATA, AND SAMPLES.

B. Information and material submitted under this section shall be marked "SUBMITTED UNDER SECTION 23 05 12, GENERAL MOTOR REQUIREMENTS FOR HVAC ", with applicable paragraph identification.

C. Submit motor submittals with driven equipment.

D. Shop Drawings:

1. Provide documentation to demonstrate compliance with contract documents.
2. Motor nameplate information shall be submitted including electrical ratings, efficiency, bearing data, power factor, frame size, dimensions, mounting details, materials, horsepower, voltage, phase, speed (RPM), enclosure, starting characteristics, torque characteristics, code letter, full load and locked rotor current, service factor, and lubrication method.

E. Manufacturer's Literature and Data including: Full item description and optional features and accessories. Include dimensions, weights, materials, applications, standard compliance, model numbers, size, and capacity.

F. Complete operating and maintenance manuals including wiring diagrams, technical data sheets, information for ordering replacement parts, and troubleshooting guide:

1. Include complete list indicating all components of the systems.
2. Include complete diagrams of the internal wiring for each item of equipment.
3. Diagrams shall have their terminals identified to facilitate installation, operation and maintenance.

G. Certification: Two weeks prior to final inspection, unless otherwise noted, certification shall be submitted to the Owner's representative

stating that the motors have been properly applied, installed, adjusted, lubricated, and tested.

H. Completed System Readiness Checklist provided by the Commissioning Agent and completed by the contractor, signed by a qualified technician and dated on the date of completion, in accordance with the requirements of Section 23 08 00, COMMISSIONING OF HVAC SYSTEMS.

I. Submit training plans and instructor qualifications in accordance with the requirements of Section 23 08 00, COMMISSIONING OF HVAC SYSTEMS.

1.5 AS-BUILT DOCUMENTATION

A. Submit manufacturer's literature and data updated to include submittal review comments and any equipment substitutions.

B. Submit operation and maintenance data updated to include submittal review comments, Owner approved substitutions and construction revisions shall be in electronic version on CD or DVD inserted into a three-ring binder. All aspects of system operation and maintenance procedures, including applicable piping isometrics, wiring diagrams of all circuits, a written description of system design, control logic, and sequence of operation shall be included in the operation and maintenance manual. The operations and maintenance manual shall include troubleshooting techniques and procedures for emergency situations. Notes on all special systems or devices shall be included. A List of recommended spare parts (manufacturer, model number, and quantity) shall be furnished. Information explaining any special knowledge or tools the owner will be required to employ shall be inserted into the As-Built documentation.

C. The installing contractor shall maintain as-built drawings of each completed phase for verification; and, shall provide the complete set at the time of final systems certification testing. Should the installing contractor engage the testing company to provide as-built or any portion thereof, it shall not be deemed a conflict of interest or breach of the 'third party testing company' requirement. Provide record drawings as follows:

1. Red-lined, hand-marked drawings are to be provided, with one paper copy and a scanned PDF version of the hand-marked drawings provided on CD or DVD.

2. As-built drawings are to be provided, with a copy of them on AutoCAD on CD or DVD. The CAD drawings shall use multiple line layers with a separate individual layer for each system.

D. The as-built drawings shall indicate the location and type of all lockout/tagout points for all energy sources for all equipment and pumps to include breaker location and numbers, valve tag numbers, etc. Coordinate lockout/tagout procedures and practices with local Owner requirements.

E. Certification documentation shall be provided to Owner's Representative 21 working days prior to submitting the request for final inspection. The documentation shall include all test results, the names of individuals performing work for the testing agency on this project, detailed procedures followed for all tests, and provide documentation/certification that all results of tests were within limits specified. Test results shall contain written sequence of test procedure with written test results annotated at each step along with the expected outcome or setpoint. The results shall include all readings, including but not limited to data on device (make, model and performance characteristics), normal pressures, switch ranges, trip points, amp readings, and calibration data to include equipment serial numbers or individual identifications, etc.

PART 2 - PRODUCTS

2.1 MOTORS

A. For alternating current, fractional and integral horsepower motors, NEMA MG 1 and NEMA MG 2 shall apply.

B. For severe duty TEFC motors, IEEE 841 shall apply.

C. All material and equipment furnished and installation methods shall conform to the requirements of Section 26 29 11, MOTOR CONTROLLERS; and Section 26 05 19, LOW-VOLTAGE ELECTRICAL POWER CONDUCTORS AND CABLES. Provide all electrical wiring, conduit, and devices necessary for the proper connection, protection and operation of the systems. Provide premium efficiency type motors. Unless otherwise specified for a particular application, use electric motors with the following requirements.

D. Single-phase Motors: Motors for centrifugal fans and pumps may be split phase or permanent split capacitor (PSC) type. Provide capacitor-start type for hard starting applications.

E. Poly-phase Motors: NEMA Design B, Squirrel cage, induction type.

1. Two Speed Motors: Each two-speed motor shall have two separate windings. Provide a time- delay (20 seconds minimum) relay for switching from high to low speed.

F. Voltage ratings shall be as follows:
   1. Single phase:
      a. Motors connected to 120-volt systems: 115 volts.
      b. Motors connected to 208-volt systems: 200 volts.
      c. Motors connected to 240-volt or 480-volt systems: 230/460 volts, dual connection.
   2. Three phase:
      a. Motors connected to 208-volt systems: 200 volts.
      b. Motors, less than 74.6 kW (100 hp), connected to 240-volt or 480-volt systems: 208-230/460 volts, dual connection.
      c. Motors, 74.6 kW (100 hp) or larger, connected to 240-volt systems: 230 volts.
      d. Motors, 74.6 kW (100 hp) or larger, connected to 480-volt systems: 460 volts.
      e. Motors connected to high voltage systems (Over 600V): Shall conform to NEMA MG 1 for connection to the nominal system voltage shown on the drawings.

G. Number of phases shall be as follows:
   1. Motors, less than 373 W (1/2 hp): Single phase.
   2. Motors, 373 W (1/2 hp) and larger: 3 phase.
   3. Exceptions:
      a. Hermetically sealed motors.
      b. Motors for equipment assemblies, less than 746 W (1 hp), may be single phase provided the manufacturer of the proposed assemblies cannot supply the assemblies with three phase motors.

H. Horsepower ratings shall be adequate for operating the connected loads continuously in the prevailing ambient temperatures in areas where the motors are installed, without exceeding the NEMA standard temperature rises for the motor insulation.

I. Motor designs, as indicated by the NEMA code letters, shall be coordinated with the connected loads to assure adequate starting, acceleration, and running torque without exceeding nameplate ratings or considering service factor.

J. Motor Enclosures:

1. Shall be the NEMA types as specified and/or shown in the Contract Documents.
2. Where the types of motor enclosures are not shown on the drawings, they shall be the NEMA types per NEMA 250, which are most suitable for the environmental conditions where the motors are being installed. Enclosure requirements for certain conditions are as follows:
   a. Motors located outdoors, indoors in wet or high humidity locations, or in unfiltered airstreams shall be totally enclosed type.
   b. Where motors are located in an NEC 511 classified area, provide TEFC explosion proof motor enclosures.
   c. Where motors are located in a corrosive environment, provide TEFC enclosures with corrosion resistant finish.
3. Enclosures shall be primed and finish coated at the factory with manufacturer's prime coat and standard finish.

K. Electrical Design Requirements:

1. Motors shall be continuous duty.
2. The insulation system shall be rated minimum of Class B, 130 degrees C (266 degrees F).
3. The maximum temperature rise by resistance at rated power shall not exceed Class B limits, 80 degrees C (176 degrees F).
4. The speed/torque and speed/current characteristics shall comply with NEMA Design A or B, as specified.
5. Motors shall be suitable for full voltage starting, unless otherwise noted. Coordinate motor features with applicable motor controllers.
6. Motors for variable frequency drive applications shall adhere to NEMA MG 1, Part 30, Application Considerations for Constant Speed Motors Used on a Sinusoidal Bus with Harmonic Content and General-Purpose Motors Used with Adjustable-Voltage or Adjustable-Frequency Controls or Both, or NEMA MG 1, Part 31, Definite-Purpose Inverter-Fed Polyphase Motors.

L. Mechanical Design Requirements:

1. Bearings shall be rated in accordance with ABMA 9 or ABMA 11 for a minimum fatigue life of 26,280 hours for belt-driven loads and 100,000 hours for direct-drive loads based on L10 (Basic Rating Life) at full load direct coupled, except vertical high thrust

motors which require a 40,000 hours rating. A minimum fatigue life of 40,000 hours is required for VFD drives.

2. Vertical motors shall be capable of withstanding a momentary up thrust of at least 30 percent of normal down thrust.
3. Grease lubricated bearings shall be designed for electric motor use. Grease shall be capable of the temperatures associated with electric motors and shall be compatible with Polyurea based greases.
4. Grease fittings, if provided, shall be Alemite type or equivalent.
5. Oil lubricated bearings, when specified, shall have an externally visible sight glass to view oil level.
6. Vibration shall not exceed 3.8 mm (0.15 inch) per second, unfiltered peak.
7. Noise level shall meet the requirements of the application.
8. Motors on 180 frames and larger shall have provisions for lifting eyes or lugs capable of a safety factor of 5.
9. All external fasteners shall be corrosion resistant.
10. Condensation heaters, when specified, shall keep motor windings at least 5 degrees C (9 degrees F) above ambient temperature.
11. Winding thermostats, when specified shall be normally closed, connected in series.
12. Grounding provisions shall be in the main terminal box.

M. Special Requirements:

1. Where motor power requirements of equipment furnished deviate from power shown on plans, provide electrical service designed under the requirements of NFPA 70 without additional cost or time to the Government.
2. Assemblies of motors, starters, controls and interlocks on factory assembled and wired devices shall be in accordance with the requirements of this specification.
3. Wire and cable materials specified in the electrical division of the specifications shall be modified as follows:
   a. Wiring material located where temperatures can exceed 71 degrees C (160 degrees F) shall be stranded copper with Teflon FEP insulation with jacket. This includes wiring on the boilers.
   b. Other wiring at boilers and to control panels shall be NFPA 70 designation THWN.

c. Provide shielded conductors or wiring in separate conduits for all instrumentation and control systems where recommended by manufacturer of equipment.

4. Select motor sizes so that the motors do not operate into the service factor at maximum required loads on the driven equipment. Motors on pumps shall be sized for non-overloading at all points on the pump performance curves.

5. Motors utilized with variable frequency drives shall be rated "inverter-duty" per NEMA MG 1, Part 31, Definite-Purpose Inverter-Fed Polyphase Motors. Provide motor shaft grounding apparatus that will protect bearings from damage from stray currents.

N. Additional requirements for specific motors, as indicated in the other sections listed in Article, RELATED SECTIONS shall also apply.

O. NEMA Premium Efficiency Electric Motors (Motor Efficiencies): All permanently wired polyphase motors of 746 W (1 hp) or more shall meet the minimum full-load efficiencies as indicated in the following table. Motors of 746 W (1 hp) or more with open, drip-proof, or TEFC enclosures shall be NEMA premium efficiency type, unless otherwise indicated. Motors provided as an integral part of motor driven equipment are excluded from this requirement if a minimum seasonal or overall efficiency requirement is indicated for that equipment by the provisions of another section.

Minimum Premium Efficiencies Open Drip-Proof				**Minimum Premium Efficiencies Totally Enclosed Fan-Cooled (TEFC)**			
Rating kW (hp)	**1200 RPM**	**1800 RPM**	**3600 RPM**	**Rating kW (hp)**	**1200 RPM**	**1800 RPM**	**3600 RPM**
0.746 (1)	82.5%	85.5%	77.0%	0.746 (1)	82.5%	85.5%	77.0%
1.12 (1.5)	86.5%	86.5%	84.0%	1.12 (1.5)	87.5%	86.5%	84.0%
1.49 (2)	87.5%	86.5%	85.5%	1.49 (2)	88.5%	86.5%	85.5%
2.24 (3)	88.5%	89.5%	85.5%	2.24 (3)	89.5%	89.5%	86.5%
3.73 (5)	89.5%	89.5%	86.5%	3.73 (5)	89.5%	89.5%	88.5%
5.60 (7.5)	90.2%	91.0%	88.5%	5.60 (7.5)	91.0%	91.7%	89.5%
7.46 (10)	91.7%	91.7%	89.5%	7.46 (10)	91.0%	91.7%	90.2%
11.2 (15)	91.7%	93.0%	90.2%	11.2 (15)	91.7%	92.4%	91.0%
14.9 (20)	92.4%	93.0%	91.0%	14.9 (20)	91.7%	93.0%	91.0%
18.7 (25)	93.0%	93.6%	91.7%	18.7 (25)	93.0%	93.6%	91.7%
22.4 (30)	93.6%	94.1%	91.7%	22.4 (30)	93.0%	93.6%	91.7%

29.8 (40)	94.1%	94.1%	92.4%	29.8 (40)	94.1%	94.1%	92.4%
37.3 (50)	94.1%	94.5%	93.0%	37.3 (50)	94.1%	94.5%	93.0%
44.8 (60)	94.5%	95.0%	93.6%	44.8 (60)	94.5%	95.0%	93.6%
56.9 (75)	94.5%	95.0%	93.6%	56.9 (75)	94.5%	95.4%	93.6%
74.6 (100)	95.0%	95.4%	93.6%	74.6 (100)	95.0%	95.4%	94.1%
93.3 (125)	95.0%	95.4%	94.1%	93.3 (125)	95.0%	95.4%	95.0%
112 (150)	95.4%	95.8%	94.1%	112 (150)	95.8%	95.8%	95.0%
149.2 (200)	95.4%	95.8%	95.0%	149.2 (200)	95.8%	96.2%	95.4%

P. Minimum Power Factor at Full Load and Rated Voltage: 90 percent at 1200 RPM, 1800 RPM, and 3600 RPM. Power factor correction capacitors shall be provided unless the motor meets the 0.90 requirement without it or if the motor is controlled by a variable frequency drive. The power factor correction capacitors shall be able to withstand high voltage transients and power line variations without breakdown.

Q. Energy Efficiency of Small Motors (Motor Efficiencies): All motors under 746 W (1 hp) shall meet the requirements of the DOE Small Motor Regulation.

Polyphase Open Motors Average full load efficiency				**Capacitor-start capacitor-run and capacitor-start induction run open motors Average full load efficiency**			
Rating kW (hp)	**6 poles**	**4 poles**	**2 poles**	**Rating kW (hp)**	**6 poles**	**4 poles**	**2 poles**
0.18 (0.25)	67.5	69.5	65.6	0.18 (0.25)	62.2	68.5	66.6
0.25 (0.33)	71.4	73.4	69.5	0.25 (0.33)	66.6	72.4	70.5
0.37 (0.5)	75.3	78.2	73.4	0.37 (0.5)	76.2	76.2	72.4
0.55 (0.75)	81.7	81.1	76.8	0.55 (0.75)	80.2	81.8	76.2

PART 3 - EXECUTION

3.1 INSTALLATION

A. Install motors in accordance with manufacturer’s recommendations, the NEC, NEMA, as shown on the drawings and/or as required by other sections of these specifications.

B. If an installation is unsatisfactory to the Owner’s representative, the Contractor shall correct the installation at no additional cost or time to the Government.

3.2 FIELD TESTS

A. All tests shall be witnessed by the Commissioning Agent or by theOwner’s representative.

B. Perform an electric insulation resistance Test using a megohmmeter on all motors after installation, before startup. All shall test free from grounds.

C. Perform Load test in accordance with IEEE 112, Test Method B, to determine freedom from electrical or mechanical defects and compliance with performance data.

D. Insulation Resistance: Not less than one-half meg-ohm between stator conductors and frame, to be determined at the time of final inspection.

E. All test data shall be complied into a report form for each motor and provided to the contracting officer or their representative.

3.3 STARTUP AND TESTING

A. Perform tests as recommended by product manufacturer and listed standards and under actual or simulated operating conditions and prove full compliance with design and specified requirements. Tests of the various items of equipment shall be performed simultaneously with the system of which each item is an integral part.

B. When any defects are detected, correct defects and repeat test at no additional cost or time to the Government.

C. The Commissioning Agent will observe startup and contractor testing of selected equipment. Coordinate the startup and contractor testing schedules with Owner’s representative. Provide a minimum notice of 10 working days prior to startup and testing.

3.4 COMMISSIONING

A. Provide commissioning documentation in accordance with the requirements of Section 23 08 00, COMMISSIONING OF HVAC SYSTEMS.

B. Components provided under this section of the specification will be tested as part of a larger system.

3.5 DEMONSTRATION AND TRAINING

A. Provide services of manufacturer’s technical representative for one hour to instruct each Facility personnel responsible in operation and maintenance of the system.

B. Submit training plans and instructor qualifications in accordance with the requirements of Section 23 08 00, COMMISSIONING OF HVAC SYSTEMS.

- - - E N D - - -

SECTION 23 05 41
NOISE AND VIBRATION PART 1 - GENERAL

1.1 DESCRIPTION

A. This section specifies the application of noise control measures, seismic restraint for equipment and vibration control techniques rotating equipment and parts including chillers, cooling towers, pumps, fans, compressors, motors .

B. A complete listing of all common acronyms and abbreviations are included in Section 23 05 11, COMMON WORK RESULTS FOR HVAC.
Noise criteria, seismic restraints for equipment , vibration tolerance and vibration isolation for HVAC and plumbing work.

1.2 RELATED WORK

A. Section 01 33 23, SHOP DRAWINGS, PRODUCT DATA and SAMPLES.

B. Section 23 05 10, COMMON WORK RESULTS FOR HVAC.

C. Section 23 31 00, HVAC DUCTS and CASINGS.

D. Section 23 08 00, COMMISSIONING OF HVAC SYSTEMS.

E. Examine all drawings and criteria sheets and all other Sections of the Specifications for requirements, which affect work under this Section whether or not such work is specifically mentioned in this Section.

1.3 QUALITY ASSURANCE

A. Refer to article, QUALITY ASSURANCE in specification Section 23 05 11, COMMON WORK RESULTS FOR HVAC.

B. Noise Criteria:

1. Noise levels in all 8 octave bands due to equipment and duct systems shall not exceed recommended NC levels:

2. For equipment which has no sound power ratings scheduled on the plans, the contractor shall select equipment such that the foregoing noise criteria, local ordinance noise levels, and OSHA requirements are not exceeded. Selection procedure shall be in accordance with ASHRAE Fundamentals Handbook, Chapter 8, Sound and Vibration.

3. An allowance, not to exceed 5db, may be added to the measured value to compensate for the variation of the room attenuating effect between room test condition prior to occupancy and design condition

after occupancy which may include the addition of sound absorbing material, such as, furniture. This allowance may not be taken after occupancy. The room attenuating effect is defined as the difference between sound power level emitted to room and sound pressure level in room.

4. In absence of specified measurement requirements, measure equipment noise levels three feet from equipment and at an elevation of maximum noise generation.

C. Seismic Restraint Requirements:

1. Equipment:
   a. All mechanical equipment not supported with isolators external to the unit shall be securely anchored to the structure. Such mechanical equipment shall be properly supported to resist a horizontal force of 50 percent of the weight of the equipment furnished.
   b. All mechanical equipment mounted on vibration isolators shall be provided with seismic restraints capable of resisting a horizontal force of 100 percent of the weight of the equipment furnished.
2. Piping: Refer to specification Section 23 05 10, COMMON WORK RESULTS FOR HVAC.
3. Ductwork: Refer to specification Section 23 31 00, HVAC DUCTS AND CASINGS.

D. Allowable Vibration Tolerances for Rotating, Non-reciprocating Equipment: Not to exceed a self-excited vibration maximum velocity of 5 mm per second (0.20 inch per second) RMS, filter in, when measured with a vibration meter on bearing caps of machine in vertical, horizontal and axial directions or measured at equipment mounting feet if bearings are concealed. Measurements for internally isolated fans and motors may be made at the mounting feet.

1.4 SUBMITTALS

A. Submit in accordance with specification Section 01 33 23, SHOP DRAWINGS, PRODUCT DATA, and SAMPLES.

B. Manufacturer's Literature and Data:

1. Vibration isolators:
   a. Floor mountings
   b. Hangers
   c. Snubbers

d. Thrust restraints

2. Bases.

3. Seismic restraint provisions and bolting.

4. Acoustical enclosures.

C. Isolator manufacturer shall furnish with submittal load calculations for selection of isolators, including supplemental bases, based on lowest operating speed of equipment supported.

D. Seismic Requirements: Submittals are required for all equipment anchors, supports and seismic restraints. Submittals shall include weights, dimensions, standard connections, and manufacturer's certification that all specified equipment will withstand seismic Lateral Force requirements as shown on drawings.

1.5 APPLICABLE PUBLICATIONS

A. The publications listed below form a part of this specification to the extent referenced. The publications are referenced in the text by the basic designation only.

B. American Society of Heating, Refrigerating and Air-Conditioning Engineers, Inc. (ASHRAE):

Handbook 2017.....Fundamentals Handbook, Chapter 8, Sound and Vibration

C. American Society for Testing and Materials (ASTM):

A123/A123M-2017.....Standard Specification for Zinc (Hot-Dip Galvanized) Coatings on Iron and Steel Products

A307-2016.....Standard Specification for Carbon Steel Bolts and Studs, 60,000 PSI Tensile Strength

D2240-05(2010).....Standard Test Method for Rubber Property - Durometer Hardness

D. Manufacturers Standardization (MSS):

SP-58-2018.....Pipe Hangers and Supports-Materials, Design and Manufacture

E. Occupational Safety and Health Administration (OSHA):

29 CFR 1960.95.....Occupational Noise Exposure

F. American Society of Civil Engineers (ASCE):

ASCE 7-2017.....Minimum Design Loads for Buildings and Other Structures.

G. American National Standards Institute / Sheet Metal and Air Conditioning Contractor’s National Association (ANSI/SMACNA):

001-2008.....Seismic Restraint Manual: Guidelines for Mechanical Systems, 3rd Edition.

H. International Code Council (ICC):

IBC 2018.....International Building Code.

PART 2 - PRODUCTS

2.1 GENERAL REQUIREMENTS

A. Type of isolator, base, and minimum static deflection shall be as required for each specific equipment application as recommended by isolator or equipment manufacturer but subject to minimum requirements indicated herein and in the schedule on the drawings.

B. Elastometric Isolators shall comply with ASTM D2240 and be oil resistant neoprene with a maximum stiffness of 60 durometer and have a straight-line deflection curve.

C. Exposure to weather: Isolator housings to be either hot dipped galvanized or powder coated to ASTM B117 salt spray testing standards. Springs to be powder coated or electro galvanized. All hardware to be electro galvanized. In addition provide limit stops to resist wind velocity. Velocity pressure established by wind shall be calculated in accordance with section 1609 of the International Building Code. A minimum wind velocity of 75 mph shall be employed.

D. Uniform Loading: Select and locate isolators to produce uniform loading and deflection even when equipment weight is not evenly distributed.

E. Color code isolators by type and size for easy identification of capacity.

2.2 SEISMIC RESTRAINT REQUIREMENTS FOR EQUIPMENTS

A. Bolt pad mounted equipment, without vibration isolators, to the floor or other support using ASTM A307 standard bolting material.

B. Floor mounted equipment, with vibration Isolators: Type SS. Where Type N isolators are used provide channel frame base horizontal restraints bolted to the floor, or other support, on all sides of the equipment Size and material required for the base shall be as recommended by the isolator manufacturer.

C. On all sides of suspended equipment, provide bracing for rigid supports and provide restraints for resiliently supported equipment.

2.3 VIBRATION ISOLATORS

A. Floor Mountings:

1. Double Deflection Neoprene (Type N): Shall include neoprene covered steel support plated (top and bottom), friction pads, and necessary bolt holes.

B. Hangers: Shall be combination neoprene and springs unless otherwise noted and shall allow for expansion of pipe.
   1. Combination Neoprene and Spring (Type H): Vibration hanger shall contain a spring and double deflection neoprene element in series. Spring shall have a diameter not less than 0.8 of compressed operating spring height. Spring shall have a minimum additional travel of 50 percent between design height and solid height. Spring shall permit a 15 degree angular misalignment without rubbing on hanger box.
   2. Spring Position Hanger (Type HP): Similar to combination neoprene and spring hanger except hanger shall hold piping at a fixed elevation during installation and include a secondary adjustment feature to transfer load to spring while maintaining same position.
   3. Neoprene (Type HN): Vibration hanger shall contain a double deflection type neoprene isolation element. Hanger rod shall be separated from contact with hanger bracket by a neoprene grommet.
   4. Spring (Type HS): Vibration hanger shall contain a coiled steel spring in series with a neoprene grommet. Spring shall have a diameter not less than 0.8 of compressed operating spring height. Spring shall have a minimum additional travel of 50 percent between design height and solid height. Spring shall permit a 15 degree angular misalignment without rubbing on hanger box.
   5. Hanger supports for piping 50 mm (2 inches) and larger shall have a pointer and scale deflection indicator.
   6. Hangers used in seismic applications shall be provided with a neoprene and steel rebound washer installed ¼’ clear of bottom of hanger housing in operation to prevent spring from excessive upward travel

C. Snubbers: Each spring mounted base shall have a minimum of four all-directional or eight two directional (two per side) seismic snubbers that are double acting. Elastomeric materials shall be shock absorbent neoprene bridge quality bearing pads, maximum 60 durometer, replaceable and have a minimum thickness of 6 mm (1/4 inch). Air gap between hard and resilient material shall be not less than 3 mm (1/8 inch) nor more

than 6 mm (1/4 inch). Restraints shall be capable of withstanding design load without permanent deformation.

D. Thrust Restraints (Type THR): Restraints shall provide a spring element contained in a steel frame with neoprene pads at each end attachment. Restraints shall have factory preset thrust and be field adjustable to allow a maximum movement of 6 mm (1/4 inch) when the fan starts and stops. Restraint assemblies shall include rods, angle brackets and other hardware for field installation.

2.4 BASES

A. Rails (Type R): Design rails with isolator brackets to reduce mounting height of equipment and cradle machines having legs or bases that do not require a complete supplementary base. To assure adequate stiffness, height of members shall be a minimum of 1/12 of longest base dimension but not less than 100 mm (4 inches). Where rails are used with neoprene mounts for small fans or close coupled pumps, extend rails to compensate overhang of housing.

B. Integral Structural Steel Base (Type B): Design base with isolator brackets to reduce mounting height of equipment which require a complete supplementary rigid base. To assure adequate stiffness, height of members shall be a minimum of 1/12 of longest base dimension, but not less than 100 mm (four inches).

C. Inertia Base (Type I): Base shall be a reinforced concrete inertia base. Pour concrete into a welded steel channel frame, incorporating prelocated equipment anchor bolts and pipe sleeves. Level the concrete to provide a smooth uniform bearing surface for equipment mounting. Provide grout under uneven supports. Channel depth shall be a minimum of 1/12 of longest dimension of base but not less than 150 mm (six inches). Form shall include 13-mm (1/2-inch) reinforcing bars welded in place on minimum of 203 mm (eight inch) centers running both ways in a layer 40 mm (1-1/2 inches) above bottom. Use height saving brackets in all mounting locations. Weight of inertia base shall be equal to or greater than weight of equipment supported to provide a maximum peak-to-peak displacement of 2 mm (1/16 inch).

D. Curb Mounted Isolation Base (Type CB): Fabricate from aluminum to fit on top of standard curb with overlap to allow water run-off and have wind and water seals which shall not interfere with spring action. Provide resilient snubbers with 6 mm (1/4 inch) clearance for wind resistance. Top and bottom bearing surfaces shall have sponge type

weather seals. Integral spring isolators shall comply with Spring Isolator (Type S) requirements.

2.5 SOUND ATTENUATING UNITS

Refer to specification Section 23 31 00, HVAC DUCTS and CASINGS.

2.6 ACOUSTICAL ENCLOSURES IN MECHANICAL ROOMS

Provide where shown on the drawings. Enclosures shall be removable and sectional, of a size and weight that sections can be readily handled with typical lifting and moving equipment available in the equipment room. Enclosures must contain access openings, observation ports, lights, and ventilation where required for normal operation, observation and servicing.

PART 3 - EXECUTION

3.1 INSTALLATION

A. Vibration Isolation:

1. No metal-to-metal contact will be permitted between fixed and floating parts.
2. Connections to Equipment: Allow for deflections equal to or greater than equipment deflections. Electrical, drain, piping connections, and other items made to rotating or reciprocating equipment (pumps, compressors, etc.) which rests on vibration isolators, shall be isolated from building structure for first three hangers or supports with a deflection equal to that used on the corresponding equipment.
3. Common Foundation: Mount each electric motor on same foundation as driven machine. Hold driving motor and driven machine in positive rigid alignment with provision for adjusting motor alignment and belt tension. Bases shall be level throughout length and width. Provide shims to facilitate pipe connections, leveling, and bolting.
4. Provide heat shields where elastomers are subject to temperatures over 38 degrees C (l00 degrees F).
5. Extend bases for pipe elbow supports at discharge and suction connections at pumps. Pipe elbow supports shall not short circuit pump vibration to structure.
6. Non-rotating equipment such as heat exchangers and convertors shall be mounted on isolation units having the same static deflection as the isolation hangers or support of the pipe connected to the equipment.

B. Inspection and Adjustments: Check for vibration and noise transmission through connections, piping, ductwork, foundations, and walls. Adjust,

repair, or replace isolators as required to reduce vibration and noise transmissions to specified levels.

3.2 ADJUSTING

A. Adjust vibration isolators after piping systems are filled and equipment is at operating weight.

B. Adjust limit stops on restrained spring isolators to mount equipment at normal operating height. After equipment installation is complete, adjust limit stops so they are out of contact during normal operation.

C. Attach thrust limits at centerline of thrust and adjust to a maximum of 1/4inch (6-mm) movement during start and stop.

D. Adjust active height of spring isolators.

E. Adjust snubbers according to manufacturer's recommendations.

F. Adjust seismic restraints to permit free movement of equipment within normal mode of operation.

G. Torque anchor bolts according to equipment manufacturer's recommendations to resist seismic forces.

3.3 COMMISSIONING

A. Provide commissioning documentation in accordance with the requirements of section 23 08 00 – COMMISSIONING OF HVAC SYSTEMS for all inspection, start up, and contractor testing required above and required by the System Readiness Checklist provided by the Commissioning Agent.

B. Components provided under this section of the specification will be tested as part of a larger system. Refer to section 23 08 00 – COMMISSIONING OF HVAC SYSTEMS and related sections for contractor responsibilities for system commissioning.

- - - E N D - - -

SELECTION GUIDE FOR VIBRATION ISOLATORS

EQUIPMENT		ON GRADE			20FT FLOOR SPAN			30FT FLOOR SPAN			40FT FLOOR SPAN			5
		BASE TYPE	ISOL TYPE	MIN DEFL	BASE TYPE	ISOL TYPE	MIN DEFL	BASE TYPE	ISOL TYPE	MIN DEFL	BASE TYPE	ISOL TYPE	MIN DEFL	BA TY
REFRIGERATION MACHINES														
ABSORPTION		---	D	0.3	---	SP	0.8	---	SP	1.5	---	SP	1.5	-
PACKAGED HERMETIC		---	D	0.3	---	SP	0.8	---	SP	1.5	---	SP	1.5	F
OPEN CENTRIFUGAL		B	D	0.3	B	SP	0.8	---	SP	1.5	B	SP	1.5	B
RECIPROCATING:														
ALL		---	D	0.3	---	SP	0.8	R	SP	2.0	R	SP	2.5	R
COMPRESSORS AND VACUUM PUMPS														
UP THROUGH 1-1/2 HP		---	D,L, W	0.8	----	D,L, W	0.8	---	D,L, W	1.5	---	D,L, W	1.5	--
2 HP AND OVER:														
500 - 750 RPM		---	D	0.8	---	S	0.8	---	S	1.5	---	S	1.5	--
750 RPM & OVER		---	D	0.8	---	S	0.8	---	S	1.5	---	S	1.5	--
PUMPS														
CLOSE COUPLED	UP TO 1-1/2 HP	---	---	---	---	D,L, W	---	---	D,L, W	---	---	D,L, W	---	--
	2 HP & OVER	---	---	---	I	S	0.8	I	S	1.5	I	S	1.5	I

EQUIPMENT		ON GRADE			20FT FLOOR SPAN			30FT FLOOR SPAN			40FT FLOOR SPAN			5
		BASE TYPE	ISOL TYPE	MIN DEFL	BASE TYPE	ISOL TYPE	MIN DEFL	BASE TYPE	ISOL TYPE	MIN DEFL	BASE TYPE	ISOL TYPE	MIN DEFL	BA TY
LARGE INLINE	Up to 25 HP	---	---	---	---	S	0.75	---	S	1.50	---	S	1.50	--
	26 HP THRU 30 HP	---	---	---	---	S	1.0	---	S	1.50	---	S	2.50	--
BASE MOUNTED	UP TO 10 HP	---	---	---	---	D,L, W	---	---	D,L, W	---	---	D,L, W	---	--
	15 HP THRU 40 HP	I	S	1.0	I	S	1.0	I	S	2.0	I	S	2.0	I
	50 HP & OVER	I	S	1.0	I	S	1.0	I	S	2.0	I	S	2.5	I
ROOF FANS														
ABOVE OCCUPIED AREAS:														
5 HP & OVER		---	---	---	CB	S	1.0	CB	S	1.0	CB	S	1.0	CB
CENTRIFUGAL FANS														
UP TO 50 HP:														
UP TO 200 RPM		B	N	0.3	B	S	2.5	B	S	2.5	B	S	3.5	B
201 - 300 RPM		B	N	0.3	B	S	2.0	B	S	2.5	B	S	2.5	B
301 - 500 RPM		B	N	0.3	B	S	2.0	B	S	2.0	B	S	2.5	B
501 RPM & OVER		B	N	0.3	B	S	2.0	B	S	2.0	B	S	2.0	B

EQUIPMENT	ON GRADE			20FT FLOOR SPAN			30FT FLOOR SPAN			40FT FLOOR SPAN			5
	BASE TYPE	ISOL TYPE	MIN DEFL	BASE TYPE	ISOL TYPE	MIN DEFL	BASE TYPE	ISOL TYPE	MIN DEFL	BASE TYPE	ISOL TYPE	MIN DEFL	BA TY
60 HP & OVER:													
UP TO 300 RPM	B	S	2.0	I	S	2.5	I	S	3.5	I	S	3.5	I
301 - 500 RPM	B	S	2.0	I	S	2.0	I	S	2.5	I	S	3.5	I
501 RPM & OVER	B	S	1.0	I	S	2.0	I	S	2.0	I	S	2.5	I
COOLING TOWERS													
UP TO 500 RPM	---	---	---	---	SP	2.5	---	SP	2.5	---	SP	2.5	--
501 RPM & OVER	---	---	---	---	SP	0.75	---	SP	0.75	---	SP	1.5	--
INTERNAL COMBUSTION ENGINES													
UP TO 25 HP	I	N	0.75	I	N	1.5	I	S	2.5	I	S	3.5	I
30 THRU 100 HP	I	N	0.75	I	N	1.5	I	S	2.5	I	S	3.5	I
125 HP & OVER	I	N	0.75	I	N	1.5	I	S	2.5	I	S	3.5	I
AIR HANDLING UNIT PACKAGES													
SUSPENDED:													
UP THRU 5 HP	---	---	---	---	H	1.0	---	H	1.0	---	H	1.0	--
7-1/2 HP & OVER:													
UP TO 500 RPM	---	---	---	---	H, THR	1.5	---	H, THR	2.5	---	H, THR	2.5	--
501 RPM & OVER	---	---	---	---	H, THR	0.8	---	H, THR	0.8	---	H,TH R	0.8	--

EQUIPMENT	ON GRADE			20FT FLOOR SPAN			30FT FLOOR SPAN			40FT FLOOR SPAN			5
	BASE TYPE	ISOL TYPE	MIN DEFL	BASE TYPE	ISOL TYPE	MIN DEFL	BASE TYPE	ISOL TYPE	MIN DEFL	BASE TYPE	ISOL TYPE	MIN DEFL	BA TY
FLOOR MOUNTED:													
UP THRU 5 HP	---	D	---	---	S	1.0	---	S	1.0	---	S	1.0	--
7-1/2 HP & OVER:													
UP TO 500 RPM	---	D	---	R	S, THR	1.5	R	S, THR	2.5	R	S, THR	2.5	R
501 RPM & OVER	---	D	---	---	S, THR	0.8	---	S, THR	0.8	R	S, THR	1.5	R
HEAT PUMPS													
ALL	---	S	0.75	---	S	0.75	---	S	0.75	CB	S	1.5	--
CONDENSING UNITS													
ALL	---	SS	0.25	---	SS	0.75	---	SS	1.5	CB	SS	1.5	--
IN-LINE CENTRIFUGAL AND VANE AXIAL FANS, FLOOR MOUNTED: (APR 9)													
UP THRU 50 HP:													
UP TO 300 RPM	---	D	---	R	S	2.5	R	S	2.5	R	S	2.5	R
301 - 500 RPM	---	D	---	R	S	2.0	R	S	2.0	R	S	2.5	R
501 - & OVER	---	D	---	---	S	1.0	---	S	1.0	R	S	2.0	R
60 HP AND OVER:													
301 - 500 RPM	R	S	1.0	R	S	2.0	R	S	2.0	R	S	2.5	R
501 RPM & OVER	R	S	1.0	R	S	2.0	R	S	2.0	R	S	2.0	R

NOTES:

1. Edit the Table above to suit where isolator, other than those shown, are used, such as for se position limit stops.
2. For suspended floors lighter than 100 mm (4 inch) thick concrete, select deflection requireme
3. For separate chiller building on grade, pump isolators may be omitted.
4. Direct bolt fire pumps to concrete base. Provide pads (D) for domestic water booster pump pac
5. For projects in seismic areas, use only SS & DS type isolators and snubbers.
6. For floor mounted in-line centrifugal blowers (ARR 1): use "B" type in lieu of "R" type base.
7. Suspended: Use "H" isolators of same deflection as floor mounted.

SECTION 23 05 93
TESTING, ADJUSTING, AND BALANCING FOR HVAC

PART 1 - GENERAL

1.1 DESCRIPTION

A. Testing, adjusting, and balancing (TAB) of heating, ventilating and air conditioning (HVAC) systems. TAB includes the following:

1. Planning systematic TAB procedures.
2. Design Review Report.
3. Systems Inspection report.
4. Duct Air Leakage test report.
5. Systems Readiness Report.
6. Balancing air and water distribution systems; adjustment of total system to provide design performance; and testing performance of equipment and automatic controls.
7. Vibration and sound measurements.
8. Recording and reporting results.
9. Document critical paths of flow on reports.

B. Definitions:

1. Basic TAB used in this Section: Chapter 39, "Testing, Adjusting and Balancing" of 2019 ASHRAE Handbook, "HVAC Applications".
2. TAB: Testing, Adjusting and Balancing; the process of checking and adjusting HVAC systems to meet design objectives.
3. AABC: Associated Air Balance Council.
4. NEBB: National Environmental Balancing Bureau.
5. TABB: Testing Adjusting and Balancing Bureau
6. SMACNA: Sheet Metal Contractors National Association
7. Hydronic Systems: Includes // chilled water, // condenser water, // heating hot water // and glycol-water systems. //
8. Air Systems: Includes all outside air, supply air, return air, exhaust air and relief air systems.
9. Flow rate tolerance: The allowable percentage variation, minus to plus, of actual flow rate from values (design) in the contract documents.

1.2 RELATED WORK

A. Section 01 33 23, SHOP DRAWINGS, PRODUCT DATA, and SAMPLES.

B. Section 23 05 11, COMMON WORK RESULTS FOR HVAC.

C Section 23 05 41, NOISE AND VIBRATION CONTROL FOR HVAC PIPING AND EQUIPMENT.

D. Section 23 07 11, HVAC INSULATION.

E. Section 23 08 00, COMMISSIONING OF HVAC SYSTEMS.

F. Section 23 09 23, DIRECT-DIGITAL CONTROL SYSTEM FOR HVAC.

G. Section 23 31 00, HVAC DUCTS AND CASINGS.

K. Examine all drawings and criteria sheets and all other Sections of the Specifications for requirements, which affect work under this Section whether or not such work is specifically mentioned in this Section.

1.3 QUALITY ASSURANCE

A. Refer to Articles, Quality Assurance and Submittals, in Section 23 05 11, COMMON WORK RESULTS FOR HVAC and Section 23 08 00, COMMISSIONING OF HVAC SYSTEMS.

B. Qualifications:

1. TAB Agency: The TAB agency shall be a subcontractor of the General Contractor and shall report to and be paid by the General Contractor.

2. The TAB agency shall be either a certified member of AABC, NEEB, TABB or NEBB to perform TAB service for HVAC, water balancing and vibrations and sound testing of equipment. The certification shall be maintained for the entire duration of duties specified herein. If, for any reason, the agency loses subject certification during this period, the General Contractor shall immediately notify the COR and submit another qualified TAB firm for approval. Any agency that has been the subject of disciplinary action by either the AABC, TABB or NEBB within the five years preceding Contract Award shall not be eligible to perform any work related to the TAB. All work performed in this Section and in other related Sections by the TAB agency shall be considered invalid if the TAB agency loses its certification prior to Contract completion, and the successor agency’s review shows unsatisfactory work performed by the predecessor agency.

3. TAB Specialist: The TAB specialist shall be either a member of AABC or TABB or an experienced technician of the Agency certified by NEBB. The certification shall be maintained for the entire duration of duties specified herein. If, for any reason, the Specialist loses subject certification during this period, the General Contractor shall immediately notify the Resident Engineer and submit another TAB Specialist for approval. Any individual that has been the subject of disciplinary action by either the AABC or the NEBB within

the five years preceding Contract Award shall not be eligible to perform any duties related to the HVAC systems, including TAB. All work specified in this Section and in other related Sections performed by the TAB specialist shall be considered invalid if the TAB Specialist loses its certification prior to Contract completion and must be performed by an approved successor.

4. TAB Specialist shall be identified by the General Contractor within 60 days after the notice to proceed. The TAB specialist will be coordinating, scheduling and reporting all TAB work and related activities and will provide necessary information as required by the Resident Engineer. The responsibilities would specifically include:
   a. Shall directly supervise all TAB work.
   b. Shall sign the TAB reports that bear the seal of the TAB standard. The reports shall be accompanied by report forms and schematic drawings required by the TAB standard, AABC, TABB or NEBB.
   c. Would follow all TAB work through its satisfactory completion.
   d. Shall provide final markings of settings of all HVAC adjustment devices.
   e. Permanently mark location of duct test ports.
   f. Shall document critical paths from the fan or pump. These critical paths are ones in which are 100% open from the fan or pump to the terminal device. This will show the least amount of restriction is being imposed on the system by the TAB firm.
5. All TAB technicians performing actual TAB work shall be experienced and must have done satisfactory work on a minimum of 3 projects comparable in size and complexity to this project. Qualifications must be certified by the TAB agency in writing. The lead technician shall be certified by AABC, TABB or NEBB

C. Test Equipment Criteria: The instrumentation shall meet the accuracy/calibration requirements established by AABC National Standards, TABB/SMACNA International Standards, or by NEBB Procedural Standards for Testing, Adjusting and Balancing of Environmental Systems and instrument manufacturer. Provide calibration history of the instruments to be used for test and balance purpose.

D. TAB Criteria:
   1. One or more of the applicable AABC, NEBB, TABB or SMACNA publications, supplemented by ASHRAE Handbook "2019 HVAC

Applications" Chapter 39, and requirements stated herein shall be the basis for planning, procedures, and reports.

2. Flow rate tolerance: Following tolerances are allowed. For tolerances not mentioned herein follow 2011 ASHRAE Handbook "2019 HVAC Applications", Chapter 39, as a guideline. Air Filter resistance during tests, artificially imposed if necessary, shall be at least 100 percent of manufacturer recommended change over pressure drop values for pre-filters and after-filters.
   a. Air handling unit and all other fans, cubic meters/min (cubic feet per minute): Minus 0 percent to plus l0 percent.
   b. Air terminal units (maximum values): Minus 2 percent to plus l0 percent.
   c. Exhaust hoods/cabinets: 0 percent to plus l0 percent.
   d. Minimum outside air: 0 percent to plus 10 percent.
   e. Individual room air outlets and inlets, and air flow rates not mentioned above: Minus 5 percent to plus l0 percent except if the air to a space is 100 CFM or less the tolerance would be minus 5 to plus 5 percent.
   f. Heating hot water pumps and hot water coils: Minus 5 percent to plus 5 percent.
   g. Chilled water and condenser water pumps: Minus 0 percent to plus 5 percent.
   h. Chilled water coils: Minus 0 percent to plus 5 percent.
3. Systems shall be adjusted for energy efficient operation as described in PART 3.
4. Typical TAB procedures and critical path results shall be demonstrated to the Resident Engineer for one air distribution system (including all fans, three terminal units, three rooms randomly selected by the COR one of which shall be a critical path) and one hydronic system (pumps and three coils) as follows:
   a. When field TAB work begins.
   b. During each partial final inspection and the final inspection for the project if requested by VA.

1.4 SUBMITTALS

A. Submit in accordance with Section 01 33 23, SHOP DRAWINGS, PRODUCT DATA, and SAMPLES.

B. Submit names and qualifications of TAB agency and TAB specialists within 60 days after the notice to proceed. Submit information on three recently completed projects and a list of proposed test equipment.

C. For use by the Resident Engineer staff, submit one complete set of applicable AABC, NEBB or TABB publications that will be the basis of TAB work.

D. Submit Following for Review and Approval:

1. Design Review Report within 90 days for conventional design projects after the system layout on air and water side is completed by the Contractor.
2. Systems inspection report on equipment and installation for conformance with design.
3. Duct Air Leakage Test Report.
4. Systems Readiness Report.
5. Intermediate and Final TAB reports covering flow balance and adjustments, performance tests, vibration tests and sound tests.
6. Include in final reports uncorrected installation deficiencies noted during TAB and applicable explanatory comments on test results that differ from design requirements.
7. Include in each report the critical path for each balanced branch (air and hydronic. Every branch shall have at least one terminal device damper 100% open.

E. Prior to request for Final or Partial Final inspection, submit completed Test and Balance report for the area with noted critical paths.

1.5 APPLICABLE PUBLICATIONS

A. The following publications form a part of this specification to the extent indicated by the reference thereto. In text the publications are referenced to by the acronym of the organization.

B. American Society of Heating, Refrigerating and Air Conditioning Engineers, Inc. (ASHRAE):

Handbook 2019.....HVAC Applications ASHRAE Handbook, Chapter 39, Testing, Adjusting, and Balancing and Chapter 49, Sound and Vibration Control

C. Associated Air Balance Council (AABC):

7th Edition 2016 .....AABC National Standards for Total System Balance

D. National Environmental Balancing Bureau (NEBB):

9th Edition 2019 .....Procedural Standards for Testing, Adjusting, Balancing of Environmental Systems

3rd Edition 2015 .....Procedural Standards for the Measurement of Sound and Vibration

2rd Edition 2019 ... Standard for Whole Building Technical Commissioning of New Construction

E. Sheet Metal and Air Conditioning Contractors National Association (SMACNA):

3rd Edition 2005 .....HVAC SYSTEMS Testing, Adjusting and Balancing

TABB- TAB Procedural Guide Current Edition

PART 2 - PRODUCTS

2.1 PLUGS

Provide plastic plugs to seal holes drilled in ductwork for test purposes.

2.2 INSULATION REPAIR MATERIAL

See Section 23 07 11, HVAC INSULATION Provide for repair of insulation removed or damaged for TAB work.

PART 3 - EXECUTION

3.1 GENERAL

A. Refer to TAB Criteria in Article, Quality Assurance.

B. Obtain applicable contract documents and copies of approved submittals for HVAC equipment and automatic control systems.

3.2 DESIGN REVIEW REPORT

The TAB Specialist shall review the Contract Plans and specifications and advise the Resident Engineer of any design deficiencies that would prevent the HVAC systems from effectively operating in accordance with the sequence of operation specified or prevent the effective and accurate TAB of the system. The TAB Specialist shall provide a report individually listing each deficiency and the corresponding proposed corrective action necessary for proper system operation.

3.3 SYSTEMS INSPECTION REPORT

A. Inspect equipment and installation for conformance with design.

B. The inspection and report is to be done after air distribution equipment is on site and duct installation has begun, but well in advance of performance testing and balancing work. The purpose of the inspection is to identify and report deviations from design and ensure that systems will be ready for TAB at the appropriate time.

C. Reports: Follow check list format developed by AABC, NEBB or SMACNA (TABB), supplemented by narrative comments, with emphasis on air handling units and fans. Check for conformance with submittals. Verify that diffuser and register sizes are correct. Check air terminal unit installation including their duct sizes and routing.

3.4 DUCT AIR LEAKAGE TEST REPORT

TAB Agency shall perform the leakage test as outlined in "Duct leakage Tests and Repairs" in Section 23 31 00, HVAC DUCTS and CASINGS for TAB agency's role and responsibilities in witnessing, recording and reporting of deficiencies.

3.5 SYSTEM READINESS REPORT

A. The TAB Contractor shall measure existing air and water flow rates associated with existing systems utilized to serve renovated areas as indicated on drawings. Submit report of findings to resident engineer.

B. Inspect each System to ensure that it is complete including installation and operation of controls. Submit report to RE in standard format and forms prepared and or approved by the Commissioning Agent.

C. Verify that all items such as ductwork piping, dampers, valves, ports, terminals, connectors, etc., that is required for TAB are installed. Provide a report to the Resident Engineer.

3.6 TAB REPORTS

A. Submit an intermediate report for 50 percent of systems and equipment tested and balanced to establish satisfactory test results.

B. The TAB contractor shall provide raw data immediately in writing to the Resident Engineer if there is a problem in achieving intended results before submitting a formal report.

C. If over 20 percent of readings in the intermediate report fall outside the acceptable range, the TAB report shall be considered invalid and all contract TAB work shall be repeated after engineering and construction have been evaluated and re-submitted for approval at no additional cost to the owner.

D. Do not proceed with the remaining systems until intermediate report is approved by the Resident Engineer.

3.7 TAB PROCEDURES

A. TAB shall be performed in accordance with the requirement of the Standard under which TAB agency is certified by either AABC, TABB or NEBB. Balancing shall be done proportionally to all applicable systems.

1. At least one trunk damper shall be 100% open.
2. At least one branch damper shall be 100%open per trunk.
3. At least one terminal device duct be 100% open per branch.

B. General: During TAB all related system components shall be in full operation. Fan and pump rotation, motor loads and equipment vibration shall be checked and corrected as necessary before proceeding with TAB. Set controls and/or block off parts of distribution systems to simulate design operation of variable volume air or water systems for test and balance work.

C. Coordinate TAB procedures with existing systems and any phased construction completion requirements for the project. Provide TAB reports for pre construction air and water flow rate and for each phase of the project prior to partial final inspections of each phase of the project. Return existing areas outside the work area to pre constructed conditions.

D. Allow recommended days time in construction schedule for TAB and submission of all reports for an organized and timely correction of deficiencies.

E. Air Balance and Equipment Test: Include air handling units, fans, terminal units, fan coil units, room diffusers/outlets/inlets, computer room AC units, and laboratory fume hoods and biological safety cabinets.

1. Artificially load air filters by partial blanking to produce static air pressure drop of manufacturer’s recommended pressure drop.
2. Adjust fan speeds to provide design air flow. V-belt drives, including fixed pitch pulley requirements, are specified in Section 23 05 11, COMMON WORK RESULTS FOR HVAC .
3. Test and balance systems in all specified modes of operation, including variable volume, economizer, and fire emergency modes. Verify that dampers and other HVAC controls function properly.
4. Variable air volume (VAV) systems:
   a. Coordinate TAB, including system volumetric controls, with Section 23 09 23, DIRECT-DIGITAL CONTROL SYSTEM FOR HVAC.
   b. Section 23 36 00, AIR TERMINAL UNITS, specifies that maximum and minimum flow rates for air terminal units (ATU) be factory set. Check and readjust ATU flow rates if necessary to meet design criteria. Balance air distribution from ATU on full cooling maximum scheduled cubic meters per minute (cubic feet per

minute). Reset room thermostats and check ATU operation from maximum to minimum cooling, to the heating mode, and back to cooling. Record and report the heating coil leaving air temperature when the ATU is in the maximum heating mode. Record and report outdoor air flow rates under all operating conditions (The test shall demonstrate that the minimum outdoor air ventilation rate shall remain constant under al operating conditions).

c. Adjust operating pressure control setpoint to maintain the design flow to each space with the lowest setpoint.

5. Record final measurements for air handling equipment performance data sheets.

F. Water Balance and Equipment Test: Include circulating pumps, coils:

1. 2. Adjust flow rates for equipment. Set coils to values on equipment submittals, if different from values on contract drawings.
3. Primary-secondary (variable volume) systems: Coordinate TAB with Section 23 09 23, DIRECT-DIGITAL CONTROL SYSTEM FOR HVAC. Balance systems at design water flow and then verify that variable flow controls function as designed.
4. Record final measurements for hydronic equipment on performance data sheets. Include entering and leaving water temperatures for heating coils. Include entering and leaving air temperatures for reheat coils. Make air and water temperature measurements at the same time.

3.8 VIBRATION TESTING

A. Furnish instruments and perform vibration measurements as specified in Section 23 05 41, NOISE and VIBRATION CONTROL FOR HVAC PIPING and EQUIPMENT. Field vibration balancing is specified in Section 23 05 11, COMMON WORK RESULTS FOR HVAC . Provide measurements for all rotating HVAC equipment of 373 watts (1/2 horsepower) and larger, including centrifugal/screw compressors, cooling towers, pumps, fans and motors.

B. Record initial measurements for each unit of equipment on test forms and submit a report to the Resident Engineer. Where vibration readings exceed the allowable tolerance Contractor shall be directed to correct the problem. The TAB agency shall verify that the corrections are done and submit a final report to the Resident Engineer.

3.9 SOUND TESTING

A. Perform and record required sound measurements in accordance with Paragraph, QUALITY ASSURANCE in Section 23 05 41, NOISE and VIBRATION CONTROL FOR HVAC PIPING and EQUIPMENT.

1. Take readings in rooms, approximately fifteen (15) percent of all rooms. The Resident Engineer may designate the specific rooms to be tested.

2.

B. Take measurements with a calibrated sound level meter and octave band analyzer of the accuracy required by AABC, TABB or NEBB.

C. Sound reference levels, formulas and coefficients shall be according to 2019 ASHRAE Handbook, "HVAC Applications", Chapter 49, SOUND AND VIBRATION CONTROL.

D. Determine compliance with specifications as follows:

1. When sound pressure levels are specified, including the NC Criteria in Section 23 05 41, NOISE and VIBRATION CONTROL FOR HVAC PIPING and EQUIPMENT:

a. Reduce the background noise as much as possible by shutting off unrelated audible equipment.

b. Measure octave band sound pressure levels with specified equipment "off."

c. Measure octave band sound pressure levels with specified equipment "on."

d. Use the DIFFERENCE in corresponding readings to determine the sound pressure due to equipment.

DIFFERENCE:	0	1	2	3	4	5 to 9	10 or More
FACTOR:	10	7	4	3	2	1	0

Sound pressure level due to equipment equals sound pressure level with equipment "on" minus FACTOR.

e. Plot octave bands of sound pressure level due to equipment for typical rooms on a graph which also shows noise criteria (NC) curves.

2. When sound power levels are specified:

a. Perform steps 1.a. thru 1.d., as above.

b. For indoor equipment: Determine room attenuating effect, i.e., difference between sound power level and sound pressure level.

Determined sound power level will be the sum of sound pressure level due to equipment plus the room attenuating effect.

c. For outdoor equipment: Use directivity factor and distance from noise source to determine distance factor, i.e., difference between sound power level and sound pressure level. Measured sound power level will be the sum of sound pressure level due to equipment plus the distance factor. Use 10 meters (30 feet) for sound level location.

E. Where measured sound levels exceed specified level, the installing contractor or equipment manufacturer shall take remedial action approved by the Resident Engineer and the necessary sound tests shall be repeated.

F. Test readings for sound testing could go higher than 15 percent if determination is made by the Resident Engineer based on the recorded sound data.

3.10 MARKING OF SETTINGS

Following approval of Tab final Report, the setting of all HVAC adjustment devices including valves, splitters and dampers shall be permanently marked by the TAB Specialist so that adjustment can be restored if disturbed at any time. Style and colors used for markings shall be coordinated with the Resident Engineer.

3.11 IDENTIFICATION OF TEST PORTS

The TAB Specialist shall permanently and legibly identify the location points of duct test ports. If the ductwork has exterior insulation, the identification shall be made on the exterior side of the insulation. All penetrations through ductwork and ductwork insulation shall be sealed to prevent air leaks and maintain integrity of vapor barrier.

3.12 PHASING

A. Phased Projects: Testing and Balancing Work to follow project with areas shall be completed per the project phasing. Upon completion of the project all areas shall have been tested and balanced per the contract documents.

B. Existing Areas: Systems that serve areas outside of the project scope shall not be adversely affected. Measure existing parameters where shown to document system capacity.

3.13 COMMISSIONING

A. Provide commissioning documentation in accordance with the requirements of Section 23 08 00 – COMMISSIONING OF HVAC SYSTEMS for all inspection,

start up, and contractor testing required above and required by the System Readiness Checklist provided by the Commissioning Agent.

B. Components provided under this section of the specification will be tested as part of a larger system. Refer to Section 23 08 00 – COMMISSIONING OF HVAC SYSTEMS and related sections for contractor responsibilities for system commissioning.

3.14 CRITICAL FLOW PATH

A. Provide a documented critical path for all fluid flows. There shall be at least one terminal device that can be traced back to the fan or pump where there is no damper or valves that are less than 100% open.

- - E N D - - -

SECTION 23 07 11
HVAC INSULATION

PART 1 - GENERAL

1.1 DESCRIPTION

A. Field applied insulation for thermal efficiency and condensation control for

1. HVAC piping, ductwork and equipment.

B. Definitions

1. ASJ: All service jacket, white finish facing or jacket.
2. Air conditioned space: Space having air temperature and/or humidity controlled by mechanical equipment.
3. Cold: Equipment, ductwork or piping handling media at design temperature of 16 degrees C (60 degrees F) or below.
4. Concealed: Ductwork and piping above ceilings and in chases.
5. Exposed: Piping, ductwork, and equipment exposed to view in finished areas including mechanicaland electrical equipment rooms or exposed to outdoor weather. Attics and crawl spaces where air handling units are located are considered to be mechanical rooms. Shafts, chases, //interstitial spaces, // unfinished attics, crawl spaces and pipe basements are not considered finished areas.
6. FSK: Foil-scrim-kraft facing.
7. Hot: HVAC Ductwork handling air at design temperature above 16 degrees C (60 degrees F);HVAC equipment or piping handling media above 41 degrees C (105 degrees F)//; Boiler Plant breechings and stack temperature range 150-370 degrees C(300-700 degrees F) and piping media and equipment 32 to 230 degrees C(90 to 450 degrees F)//.
8. Density: kg/m^3 - kilograms per cubic meter (Pcf - pounds per cubic foot).
9. Runouts: Branch pipe connections up to 25-mm (one-inch) nominal size to fan coil units or reheat coils for terminal units.
10. Thermal conductance: Heat flow rate through materials.
    a. Flat surface: Watt per square meter (BTU per hour per square foot).
    b. Pipe or Cylinder: Watt per square meter (BTU per hour per linear foot).

11. Thermal Conductivity (k): Watt per meter, per degree C (BTU per inch thickness, per hour, per square foot, per degree F temperature difference).
12. Vapor Retarder (Vapor Barrier): A material which retards the transmission (migration) of water vapor. Performance of the vapor retarder is rated in terms of permeance (perms). For the purpose of this specification, vapor retarders shall have a maximum published permeance of 0.1 perms and vapor barriers shall have a maximum published permeance of 0.001 perms.
13. HPS: High pressure steam (415 kPa [60 psig] and above).
14. HPR: High pressure steam condensate return.
15. MPS: Medium pressure steam (110 kPa [16 psig] thru 414 kPa [59 psig].
16. MPR: Medium pressure steam condensate return.
17. LPS: Low pressure steam (103 kPa [15 psig] and below).
18. LPR: Low pressure steam condensate gravity return.
19. PC: Pumped condensate.
20. HWH: Hot water heating supply.
21. HWHR: Hot water heating return.
22. GH: Hot glycol-water heating supply.
23. GHR: Hot glycol-water heating return.
24. FWPD: Feedwater pump discharge.
25. FWPS: Feedwater pump suction.
26. CTPD: Condensate transfer pump discharge.
27. CTPS: Condensate transfer pump suction.
28. VR: Vacuum condensate return.
29. CPD: Condensate pump discharge.
30. R: Pump recirculation.
31. FOS: Fuel oil supply.
32. FOR: Fuel oil return.
33. CW: Cold water.
34. SW: Soft water.
35. HW: Hot water.
36. CH: Chilled water supply.
37. CHR: Chilled water return.
38. GC: Chilled glycol-water supply.
39. GCR: Chilled glycol-water return.
40. RS: Refrigerant suction.

41. PVDC: Polyvinylidene chloride vapor retarder jacketing, white.

1.2 RELATED WORK

A Section 01 33 23, SHOP DRAWINGS, PRODUCT DATA, and SAMPLES.

//B. Section 02 82 11, TRADITIONAL ASBESTOS ABATEMENT.//

//C. Section 02 82 13. GLOVEBAG ASBESTOS ABATEMENT.//

D. Section 07 84 00, FIRESTOPPING.

E.NOT USED

F. Section 23 05 11, COMMON WORK RESULTS FOR HVAC.

G. Section 23 08 00, COMMISSIONING OF HVAC SYSTEMS.

H. Section 23 21 13, HYDRONIC PIPING.

.

1.3 QUALITY ASSURANCE

A. Refer to article QUALITY ASSURANCE, in Section 23 05 11, COMMON WORK RESULTS FOR HVAC .

B. Criteria:

1. Comply with NFPA 90A, particularly paragraphs 4.3.3.1 through 4.3.3.6, 4.3.10.2.6, and 5.4.6.4, parts of which are quoted as follows:

4.3.3.1 Pipe insulation and coverings, duct coverings, duct linings, vapor retarder facings, adhesives, fasteners, tapes, and supplementary materials added to air ducts, plenums, panels, and duct silencers used in duct systems, unless otherwise provided for in 4.3.3.1.1 or 4.3.3.1.2., shall have, in the form in which they are used, a maximum flame spread index of 25 without evidence of continued progressive combustion and a maximum smoke developed index of 50 when tested in accordance with NFPA 255, *Standard Method of Test of Surface Burning Characteristics of Building Materials*.

4.3.3.1.1 Where these products are to be applied with adhesives, they shall be tested with such adhesives applied, or the adhesives used shall have a maximum flame spread index of 25 and a maximum smoke developed index of 50 when in the final dry state. *(See 4.2.4.2.)*

4.3.3.1.2 The flame spread and smoke developed index requirements of 4.3.3.1.1 shall not apply to air duct weatherproof coverings where they are located entirely outside of a building, do not penetrate a wall or roof, and do not create an exposure hazard.

4.3.3.2 Closure systems for use with rigid and flexible air ducts tested in accordance with UL 181, Standard for Safety Factory-Made Air Ducts and Air Connectors, shall have been tested, listed, and used in accordance with the conditions of their listings, in accordance with one of the following:

(1) UL 181A, Standard for Safety Closure Systems for Use with Rigid Air Ducts and Air Connectors

(2) UL 181B, Standard for Safety Closure Systems for Use with Flexible Air Ducts and Air Connectors

4.3.3.3 Air duct, panel, and plenum coverings and linings, and pipe insulation and coverings shall not flame, glow, smolder, or smoke when tested in accordance with a similar test for pipe covering, ASTM C 411, Standard Test Method for Hot-Surface Performance of High-Temperature Thermal Insulation, at the temperature to which they are exposed in service.

4.3.3.3.1 In no case shall the test temperature be below 121°C (250°F).

4.3.3.4 Air duct coverings shall not extend through walls or floors that are required to be fire stopped or required to have a fire resistance rating, unless such coverings meet the requirements of 5.4.6.4.

4.3.3.5* Air duct linings shall be interrupted at fire dampers to prevent interference with the operation of devices.

4.3.3.6 Air duct coverings shall not be installed so as to conceal or prevent the use of any service opening.

4.3.10.2.6 Materials exposed to the airflow shall be noncombustible or limited combustible and have a maximum smoke developed index of 50 or comply with the following.

4.3.10.2.6.1 Electrical wires and cables and optical fiber cables shall be listed as noncombustible or limited combustible and have a maximum smoke developed index of 50 or shall be listed as having a maximum peak optical density of 0.5 or less, an average optical density of 0.15 or less, and a maximum flame spread distance of 1.5 m (5 ft) or less when tested in accordance with NFPA 262, Standard Method of Test for Flame Travel and Smoke of Wires and Cables for Use in Air-Handling Spaces.

//4.3.10.2.6.2 Pneumatic tubing for control systems shall be listed as having a maximum peak optical density of 0.5 or less, an average optical density of 0.15 or less, and a maximum flame spread distance of 1.5 m (5 ft) or less when tested in accordance with UL 1820, Standard for Safety Fire Test of Pneumatic Tubing for Flame and Smoke Characteristics. //

4.3.10.2.6.4 Optical-fiber and communication raceways shall be listed as having a maximum peak optical density of 0.5 or less, an average optical density of 0.15 or less, and a maximum flame spread distance of 1.5 m (5 ft) or less when tested in accordance with UL 2024, Standard for Safety Optical-Fiber Cable Raceway.

4.3.10.2.6.6 Supplementary materials for air distribution systems shall be permitted when complying with the provisions of 4.3.3.

5.4.6.4 Where air ducts pass through walls, floors, or partitions that are required to have a fire resistance rating and where fire dampers are not required, the opening in the construction around the air duct shall be as follows:

(1) Not exceeding a 25.4 mm (1 in.) average clearance on all sides

(2) Filled solid with an approved material capable of preventing the passage of flame and hot gases sufficient to

ignite cotton waste when subjected to the time-temperature fire conditions required for fire barrier penetration as specified in NFPA 251, *Standard Methods of Tests of Fire Endurance of Building Construction and Materials*

2. Test methods: ASTM E84, UL 723, or NFPA 255.
3. Specified k factors are at 24 degrees C (75 degrees F) mean temperature unless stated otherwise. Where optional thermal insulation material is used, select thickness to provide thermal conductance no greater than that for the specified material. For pipe, use insulation manufacturer's published heat flow tables. For domestic hot water supply and return, run out insulation and condensation control insulation, no thickness adjustment need be made.
4. All materials shall be compatible and suitable for service temperature, and shall not contribute to corrosion or otherwise attack surface to which applied in either the wet or dry state.

C. Every package or standard container of insulation or accessories delivered to the job site for use must have a manufacturer's stamp or label giving the name of the manufacturer and description of the material.

1.4 SUBMITTALS

A. Submit in accordance with Section 01 33 23, SHOP DRAWINGS, PRODUCT DATA, and SAMPLES.

B. Shop Drawings:

1. All information, clearly presented, shall be included to determine compliance with drawings and specifications and ASTM, federal and military specifications.
   a. Insulation materials: Specify each type used and state surface burning characteristics.
   b. Insulation facings and jackets: Each type used. Make it clear that white finish will be furnished for exposed ductwork, casings and equipment.
   c. Insulation accessory materials: Each type used.
   d. Manufacturer's installation and fitting fabrication instructions for flexible unicellular insulation.
   e. Make reference to applicable specification paragraph numbers for coordination.

C. Samples:

1. Each type of insulation: Minimum size 100 mm (4 inches) square for board/block/ blanket; 150 mm (6 inches) long, full diameter for round types.
2. Each type of facing and jacket: Minimum size 100 mm (4 inches square).
3. Each accessory material: Minimum 120 ML (4 ounce) liquid container or 120 gram (4 ounce) dry weight for adhesives / cement / mastic.

1.5 STORAGE AND HANDLING OF MATERIAL

Store materials in clean and dry environment, pipe covering jackets shall be clean and unmarred. Place adhesives in original containers. Maintain ambient temperatures and conditions as required by printed instructions of manufacturers of adhesives, mastics and finishing cements.

SPEC WRITER NOTE: Insert the year of approved latest editions of the publications between the brackets and delete the brackets //----// if applicable to this project.

1.6 APPLICABLE PUBLICATIONS

A. The publications listed below form a part of this specification to the extent referenced. The publications are referenced in the text by basic designation only.

B. Federal Specifications (Fed. Spec.):

L-P-535E (2)- //1999//..Plastic Sheet (Sheeting): Plastic Strip; Poly (Vinyl Chloride) and Poly (Vinyl Chloride - Vinyl Acetate), Rigid.

C. Military Specifications (Mil. Spec.):

MIL-A-3316C -//1987// Adhesives, Fire-Resistant, Thermal Insulation

MIL-A-24179A (1)-//2016// Adhesive, Flexible Unicellular-Plastic Thermal Insulation

MIL-C-19565C (1)- //2016// Coating Compounds, Thermal Insulation, Fire- and Water-Resistant, Vapor-Barrier

MIL-C-20079H-//1987 //..Cloth, Glass; Tape, Textile Glass; and Thread, Glass and Wire-Reinforced Glass

D. American Society for Testing and Materials (ASTM):

A167-99 //2014//.....Standard Specification for Stainless and Heat-Resisting Chromium-Nickel Steel Plate, Sheet, and Strip

B209-//2014//.....Standard Specification for Aluminum and Aluminum-Alloy Sheet and Plate

C411-//2019//.....Standard test method for Hot-Surface Performance of High-Temperature Thermal Insulation

C449-//2019//.....Standard Specification for Mineral Fiber Hydraulic-Setting Thermal Insulating and Finishing Cement

C533-//2017//.....Standard Specification for Calcium Silicate Block and Pipe Thermal Insulation

C534-//2017//.....Standard Specification for Preformed Flexible Elastomeric Cellular Thermal Insulation in Sheet and Tubular Form

C547-//2017//.....Standard Specification for Mineral Fiber pipe Insulation

C552-//07 //.....Standard Specification for Cellular Glass Thermal Insulation

C553-//2015//.....Standard Specification for Mineral Fiber Blanket Thermal Insulation for Commercial and Industrial Applications

C585-//2016//.....Standard Practice for Inner and Outer Diameters of Rigid Thermal Insulation for Nominal Sizes of Pipe and Tubing (NPS System) R (1998)

C612-//2014//.....Standard Specification for Mineral Fiber Block and Board Thermal Insulation

C1126- //2019//.....Standard Specification for Faced or Unfaced Rigid Cellular Phenolic Thermal Insulation

C1136- //2017//.....Standard Specification for Flexible, Low Permeance Vapor Retarders for Thermal Insulation

D1668-97a //2017// .....Standard Specification for Glass Fabrics (Woven and Treated) for Roofing and Waterproofing

E84-//2014//.....Standard Test Method for Surface Burning Characteristics of Building Materials

E119-//2007//.....Standard Test Method for Fire Tests of Building Construction and Materials

E136-//2019//.....Standard Test Methods for Behavior of Materials in a Vertical Tube Furnace at 750 degrees C (1380 F)

E. National Fire Protection Association (NFPA):

90A-//2018//.....Standard for the Installation of Air Conditioning and Ventilating Systems

96-//2018//.....Standard~~s~~ for Ventilation Control and Fire Protection of Commercial Cooking Operations

101-//2018//.....Life Safety Code

251-//2014 //.....Standard methods of Tests of Fire Endurance of Building Construction Materials

255-//2006//.....Standard Method of tests of Surface Burning Characteristics of Building Materials

F. Underwriters Laboratories, Inc (UL):

723-//2018//.....UL Standard for Safety Test for Surface Burning Characteristics of Building Materials with Revision of 09/08

G. Manufacturer's Standardization Society of the Valve and Fitting Industry (MSS):

SP58-//2018//.....Pipe Hangers and Supports Materials, Design, and Manufacture

PART 2 - PRODUCTS

SPEC WRITE NOTE: Make material requirements agree with applicable requirements specified in the referenced Applicable Publications. Update and specify only that which applies to the project.

2.1 MINERAL FIBER OR FIBER GLASS

A. ASTM C612 (Board, Block), Class 1 or 2, density 48 kg/m^3 (3 pcf), k = 0.037 (0.26) at 24 degrees C (75 degrees F), external insulation for temperatures up to 204 degrees C (400 degrees F) with foil scrim (FSK) facing.

SPEC WRITER NOTE: See HVAC Design Manual Chapter 7 for high humidity areas. Specify class B-5 duct insulation for high humidity areas.

B. ASTM C553 (Blanket, Flexible) Type I, // Class B-3, Density 16 kg/m^3 (1 pcf), k = 0.045 (0.31) // Class B-5, Density 32 kg/m^3 (2 pcf), k = 0.04 (0.27) // at 24 degrees C (75 degrees F), for use at temperatures up to 204 degrees C (400 degrees F) with foil scrim (FSK) facing.

C. ASTM C547 (Pipe Fitting Insulation and Preformed Pipe Insulation), Class 1, k = 0.037 (0.26) at 24 degrees C (75 degrees F), for use at temperatures up to 230 degrees C (450 degrees F) with an all service

vapor retarder jacket with polyvinyl chloride premolded fitting covering.

2.2 MINERAL WOOL OR REFRACTORY FIBER

A. Comply with Standard ASTM C612, Class 3, 450 degrees C (850 degrees F).

2.3 RIGID CELLULAR PHENOLIC FOAM

A. Preformed (molded) pipe insulation, ASTM C1126, type III, grade 1, k = 0.021(0.15) at 10 degrees C (50 degrees F), for use at temperatures up to 121 degrees C (250 degrees F) with all service vapor retarder jacket with polyvinyl chloride premolded fitting covering.

B. Equipment and Duct Insulation, ASTM C 1126, type II, grade 1, k = 0.021 (0.15) at 10 degrees C (50 degrees F), for use at temperatures up to 121 degrees C (250 degrees F) with rigid cellular phenolic insulation and covering, and all service vapor retarder jacket.

2.4 CELLULAR GLASS CLOSED-CELL

A. Comply with Standard ASTM C177, C518, density 120 kg/m^3 (7.5 pcf) nominal, k = 0.033 (0.29) at 24~~0~~ degrees C (75 degrees F).

B. Pipe insulation for use at temperatures up to 200 degrees C (400 degrees F) with all service vapor retarder jacket.

SPEC WRITER NOTE: Polyisocyanurate insulation does not meet the 50 smoke rating and therefore shall not be specified for piping or ductwork located indoors (only suitable for exterior locations per paragraph 1.3.B).

2.5 POLYISOCYANURATE CLOSED-CELL RIGID

A. Preformed (fabricated) pipe insulation, ASTM C591, type IV, K=0.027(0.19) at 24 degrees C (75 degrees F), flame spread not over 25, smoke developed not over 50, for use at temperatures up to 149 degree C (300 degree F) with factory applied PVDC or all service vapor retarder jacket with polyvinyl chloride premolded fitting covers.

B. Equipment and duct insulation, ASTM C 591,type IV, K=0.027(0.19) at 24 degrees C (75 degrees F), for use at temperatures up to 149 degrees C (300 degrees F) with PVDC or all service jacket vapor retarder jacket.

2.6 FLEXIBLE ELASTOMERIC CELLULAR THERMAL

ASTM C177, C518, k = 0.039 (0.27) at 24 degrees C (75 degrees F), flame spread not over 25, smoke developed not over 50, for temperatures from minus 4 degrees C (40 degrees F) to 93 degrees C (200 degrees F). No jacket required.

2.7 DUCT WRAP FOR KITCHEN HOOD GREASE DUCTS

A. Light weight, high temperature mineral fiber or ceramic fiber insulating material with low thermal conductivity K value of 0.060 W/m^2 degrees C (0.417 Btu in/hr ft^2 degrees F) at mean temperature of 260 degrees C (500 degrees F).

B. Material shall be fully encapsulated by UL classified aluminum foil and tested to ASTM E84 standard.

C. Material shall be UL tested for internal grease fire to 1093 degrees C (2,000 degrees F) with zero clearance and for through-penetration firestop.

D. Material shall be UL classified for // 1 hour // 2 hour // fire rating for grease duct enclosure, and meet NFPA 96 requirements for direct applied insulating material to grease ducts with zero clearance.

E. Material flame spread and smoke developed ratings shall not be higher than 5, as per ASTM E 84/UL 723 Flammability Test.

2.8 CALCIUM SILICATE

A. Preformed pipe Insulation: ASTM C533, Type I and Type II with indicator denoting asbestos-free material.

B. Premolded Pipe Fitting Insulation: ASTM C533, Type I and Type II with indicator denoting asbestos-free material.

C. Equipment Insulation: ASTM C533, Type I and Type II

D. Characteristics:

Insulation Characteristics

ITEMS	TYPE I	TYPE II
Temperature, maximum degrees C (degrees F)	649 (1200)	927 (1700)
Density (dry), Kg/m^3 (lb/ ft3)	232 (14.5)	288 (18)
Thermal conductivity: Min W/ m K (Btu in/h ft^2 degrees F)@ mean temperature of 93 degrees C (200 degrees F)	0.059 (0.41)	0.078 (0.540)
Surface burning characteristics: Flame spread Index, Maximum	0	0
Smoke Density index, Maximum	0	0

2.9 INSULATION FACINGS AND JACKETS

A. Vapor Retarder, higher strength with low water permeance = 0.02 or less perm rating, Beach puncture 50 units for insulation facing on exposed ductwork, casings and equipment, and for pipe insulation jackets. Facings and jackets shall be all service type (ASJ) or PVDC Vapor Retarder jacketing.

B. ASJ jacket shall be white kraft bonded to 0.025 mm (1 mil) thick aluminum foil, fiberglass reinforced, with pressure sensitive adhesive closure. Comply with ASTM C1136. Beach puncture 50 units, Suitable for painting without sizing. Jackets shall have minimum 40 mm (1-1/2 inch) lap on longitudinal joints and minimum 75 mm (3 inch) butt strip on end joints. Butt strip material shall be same as the jacket. Lap and butt strips shall be self-sealing type with factory-applied pressure sensitive adhesive.

C. Vapor Retarder medium strength with low water vapor permeance of 0.02 or less perm rating), Beach puncture 25 units: Foil-Scrim-Kraft (FSK) or PVDC vapor retarder jacketing type for concealed ductwork and equipment.

DESIGNER'S NOTE: See HVAC Design Manual Appendix 7-A Table 7-A1 for high humidity areas. Field applied vapor barrier jackets shall be provided for all exterior piping piping and ductwork as well as on interior piping and ductwork //exposed to outdoor air conveying fluids below ambient temperature. In addition, in high humidity areas, field applied vapor barrier jackets shall be provided for all interior piping conveying fluids below ambient temperature. The application of vapor barriers in areas other than high humidity areas and/or for all interior piping and/or ductwork conveying fluids below ambient temperature is optional for the designer.

D. Field applied vapor barrier jackets shall be provided, in addition to the specified facings and jackets, on all exterior piping and ductwork as well as on interior piping and ductwork //exposed to outdoor air (i.e.; in ventilated attics, piping in ventilated (not air conditioned) spaces, etc.)in high humidity areas//conveying fluids below ambient temperature//. The vapor barrier jacket shall consist of a multi-layer laminated cladding with a maximum water vapor permeance of 0.001 perms. The minimum puncture resistance shall be 35 cm-kg (30 inch-pounds) for

interior locations and 92 cm-kg (80 inch-pounds) for exterior or exposed locations or where the insulation is subject to damage.

E. Glass Cloth Jackets: Presized, minimum 0.18 kg per square meter (7.8 ounces per square yard), 2000 kPa (300 psig) bursting strength with integral vapor retarder where required or specified. Weather proof if utilized for outside service.

F. Factory composite materials may be used provided that they have been tested and certified by the manufacturer.

G. Pipe fitting insulation covering (jackets): Fitting covering shall be premolded to match shape of fitting and shall be polyvinyl chloride (PVC) conforming to Fed Spec L-P-335, composition A, Type II Grade GU, and Type III, minimum thickness 0.7 mm (0.03 inches). Provide color matching vapor retarder pressure sensitive tape.

H. Aluminum Jacket-Piping systems// and circular breeching and stacks//: ASTM B209, 3003 alloy, H-14 temper, 0.6 mm (0.023 inch) minimum thickness with locking longitudinal joints. Jackets for elbows, tees and other fittings shall be factory-fabricated to match shape of fitting and of 0.6 mm (0.024) inch minimum thickness aluminum. Fittings shall be of same construction as straight run jackets but need not be of the same alloy. Factory-fabricated stainless steel bands shall be installed on all circumferential joints. Bands shall be 13 mm (0.5 inch) wide on 450 mm (18 inch) centers. System shall be weatherproof if utilized for outside service.

//I. Aluminum jacket-Rectangular breeching: ASTM B209, 3003 alloy, H-14 temper, 0.5 mm (0.020 inches) thick with 32 mm (1-1/4 inch) corrugations or 0.8 mm (0.032 inches) thick with no corrugations. System shall be weatherproof if used for outside service. //

DESIGNER'S NOTE: Removable insulation jackets shall be used on steam equipment and piping that will contribute to energy loss if not insulated but will still require maintenance access (This typically includes steam meters, large PRV stations, etc.).

//2.10 REMOVABLE INSULATION JACKETS

A. Insulation and Jacket:

1. Non-Asbestos Glass mat, type E needled fiber.
2. Temperature maximum of 450°F, Maximum water vapor transmission of 0.00 perm, and maximum moisture absorption of 0.2 percent by volume.
3. Jacket Material: Silicon/fiberglass and LFP 2109 pure PTFE.

4. Construction: One piece jacket body with three-ply braided pure Teflon or Kevlar thread and insulation sewn as part of jacket. Belt fastened.//

2.11 PIPE COVERING PROTECTION SADDLES

A. Cold pipe support: Premolded pipe insulation 180 degrees (half-shells) on bottom half of pipe at supports. Material shall be cellular glass or high density Polyisocyanurate insulation of the same thickness as adjacent insulation. Density of Polyisocyanurate insulation shall be a minimum of 48 kg/m^3 (3.0 pcf).

Nominal Pipe Size and Accessories Material (Insert Blocks)	
Nominal Pipe Size mm (inches)	Insert Blocks mm (inches)
Up through 125 (5)	150 (6) long
150 (6)	150 (6) long
200 (8), 250 (10), 300 (12)	225 (9) long
350 (14), 400 (16)	300 (12) long
450 through 600 (18 through 24)	350 (14) long

B. Warm or hot pipe supports: Premolded pipe insulation (180 degree half-shells) on bottom half of pipe at supports. Material shall be high density Polyisocyanurate (for temperatures up to 149 degrees C [300 degrees F]), cellular glass or calcium silicate. Insulation at supports shall have same thickness as adjacent insulation. Density of Polyisocyanurate insulation shall be a minimum of 48 kg/m^3 (3.0 pcf).

//C. Boiler Plant Pipe supports: MSS SP58, Type 39. Apply at all pipe support points, except where MSS SP58, Type 3 pipe clamps provided as part of the support system. //

2.12 ADHESIVE, MASTIC, CEMENT

A. Mil. Spec. MIL-A-3316, Class 1: Jacket and lap adhesive and protective finish coating for insulation.

B. Mil. Spec. MIL-A-3316, Class 2: Adhesive for laps and for adhering insulation to metal surfaces.

C. Mil. Spec. MIL-A-24179, Type II Class 1: Adhesive for installing flexible unicellular insulation and for laps and general use.

D. Mil. Spec. MIL-C-19565, Type I: Protective finish for outdoor use.

E. Mil. Spec. MIL-C-19565, Type I or Type II: Vapor barrier compound for indoor use.

F. ASTM C449: Mineral fiber hydraulic-setting thermal insulating and finishing cement.

G. Other: Insulation manufacturers' published recommendations.

2.13 MECHANICAL FASTENERS

A. Pins, anchors: Welded pins, or metal or nylon anchors with galvanized steel-coated or fiber washer, or clips. Pin diameter shall be as recommended by the insulation manufacturer.

B. Staples: Outward clinching // monel or // galvanized steel.

C. Wire: 1.3 mm thick (18 gage) soft annealed galvanized or 1.9 mm (14 gage) copper clad steel or nickel copper alloy.

D. Bands: 13 mm (0.5 inch) nominal width, brass, galvanized steel, aluminum or stainless steel.

2.14 REINFORCEMENT AND FINISHES

A. Glass fabric, open weave: ASTM D1668, Type III (resin treated) and Type I (asphalt treated).

B. Glass fiber fitting tape: Mil. Spec MIL-C-20079, Type II, Class 1.

C. Tape for Flexible Elastomeric Cellular Insulation: As recommended by the insulation manufacturer.

D. Hexagonal wire netting: 25 mm (one inch) mesh, 0.85 mm thick (22 gage) galvanized steel.

E. Corner beads: 50 mm (2 inch) by 50 mm (2 inch), 0.55 mm thick (26 gage) galvanized steel; or, 25 mm (1 inch) by 25 mm (1 inch), 0.47 mm thick (28 gage) aluminum angle adhered to 50 mm (2 inch) by 50 mm (2 inch) Kraft paper.

F. PVC fitting cover: Fed. Spec L-P-535, Composition A, 11-86 Type II, Grade GU, with Form B Mineral Fiber insert, for media temperature 4 degrees C (40 degrees F) to 121 degrees C (250 degrees F). Below 4 degrees C (40 degrees F) and above 121 degrees C (250 degrees F). Provide double layer insert. Provide color matching vapor barrier pressure sensitive tape.

2.15 FIRESTOPPING MATERIAL

Other than pipe and duct insulation, refer to Section 07 84 00 FIRESTOPPING.

2.16 FLAME AND SMOKE

Unless shown otherwise all assembled systems shall meet flame spread 25 and smoke developed 50 rating as developed under ASTM, NFPA and UL standards and specifications. See paragraph 1.3 "Quality Assurance".

PART 3 - EXECUTION

3.1 GENERAL REQUIREMENTS

A. Required pressure tests of duct and piping joints and connections shall be completed and the work approved by the Resident Engineer for application of insulation. Surface shall be clean and dry with all foreign materials, such as dirt, oil, loose scale and rust removed.

B. Except for specific exceptions, insulate entire specified equipment, piping (pipe, fittings, valves, accessories), and duct systems. Insulate each pipe and duct individually. Do not use scrap pieces of insulation where a full length section will fit.

//C. Where removal of insulation of piping, ductwork and equipment is required to comply with Section 02 82 11, TRADITIONAL ASBESTOS ABATEMENT and Section 02 82 13.13, GLOVEBAG ASBESTOS ABATEMENT, such areas shall be reinsulated to comply with this specification. //

D. Insulation materials shall be installed in a first class manner with smooth and even surfaces, with jackets and facings drawn tight and smoothly cemented down at all laps. Insulation shall be continuous through all sleeves and openings, except at fire dampers and duct heaters (NFPA 90A). Vapor retarders shall be continuous and uninterrupted throughout systems with operating temperature 16 degrees C (60 degrees F) and below. Lap and seal vapor retarder over ends and exposed edges of insulation. Anchors, supports and other metal projections through insulation on cold surfaces shall be insulated and vapor sealed for a minimum length of 150 mm (6 inches).

E. Install vapor stops at all insulation terminations on either side of valves, pumps and equipment and particularly in straight lengths of pipe insulation.

F. Construct insulation on parts of equipment such as chilled water pumps and heads of chillers, convertors and heat exchangers that must be opened periodically for maintenance or repair, so insulation can be removed and replaced without damage. Install insulation with bolted 1 mm thick (20 gage) galvanized steel or aluminum covers as complete units, or in sections, with all necessary supports, and split to coincide with flange/split of the equipment.

G. Insulation on hot piping and equipment shall be terminated square at items not to be insulated, access openings and nameplates. Cover all exposed raw insulation with white sealer or jacket material.

H. Protect all insulations outside of buildings with aluminum jacket using lock joint or other approved system for a continuous weather tight system. Access doors and other items requiring maintenance or access shall be removable and sealable.

//I. Insulate PRVs, flow meters, and steam traps.//

I. HVAC work not to be insulated:

1. Internally insulated ductwork and air handling units.
2. Relief air ducts (Economizer cycle exhaust air).
3. Exhaust air ducts and plenums, and ventilation exhaust air shafts.

SPEC WRITER NOTE: Edit this list if additional equipment is required, or if certain equipment is insulated for safety reasons.

4. Equipment: Expansion tanks, flash tanks, hot water pumps, //steam condensate pumps. //
5. In hot piping: Unions, flexible connectors, control valves, //PRVs//, safety valves and discharge vent piping, vacuum breakers, thermostatic vent valves, steam traps 20 mm (3/4 inch) and smaller, exposed piping through floor for convectors and radiators. Insulate piping to within approximately 75 mm (3 inches) of uninsulated items.

//J. Boiler plant work not to be insulated(NI)or if insulated the insulation shall be removal jacket type (RJ):

1. Pipes, valves and fittings:
   a. Gas fuel(NI)
   b. Oil unheated (NI)
   c. Compressed Air (NI)
   //d. Flowmeter sensing piping and blowdown // (NI)
   e. Level sensor piping and blowdown (NI)
   f. Tank drains (NI)
   g. Vents-tank, safety and back pressure valves except protective. (NI)
   h. Continuous blowdown and boiler water sampling except protective. (NI)
   i. Threaded valves (RJ)
   j. Check valves (RJ)
   k. Unions (RJ)
   l. Orifice flanges (RJ)
   m. Dielectric flanges and unions (RJ)

n. Steam header drains (NI)
o. Non-return stop and check valve drains (NI)
p. Pneumatic controls (NI)
q. Pressure transmission to gages (NI)
r. Piping in control panels (NI)
s. Tube cleaning piping (NI)
t. Chemical feed from pump-type feeders (NI)
u. Condensate piping from flash tank to condensate return pump (NI)

2. Boilers:
a. Water column, piping and blowdown (NI)
b. Auxiliary low water cutoff, piping and blowdown(NI)
c. Remote water level indicators and piping blowdown(NI)
d. Steam gage piping(NI)
e. Soot blower and piping(NI)
f. Safety valves and drip pan ells(NI)
g. Water level sensors and piping except where required by equipment manufacturer(NI)
h. Control piping and devices or interlocks(NI)
i. Drum heads (watertube boilers) (NI)

3. Equipment:
a. Condensate return pump units(NI)
b. Vacuum return pump units(NI)
c. Pumps-inlet to outlet(NI)
d. Flash tanks(NI)
e. Safety valves(NI)
f. Water meters(NI)
g. Oil meters(NI)
h. Air compressors and tanks(NI)
i. Refrigerated or desiccant air drier(NI)
j. Chemical feeders(NI)
k. Boiler and feedwater sampler(NI)
l. All nameplates (NI)

4. Specialties:
//a. Pressure reducing valves//(RJ)
b. Control valves-water and steam(NI)
c. Level sensors-piping, valves and blowdown(NI)
d. Back pressure regulators-oil and steam(NI)
e. Strainers under 65 mm (2-1/2 inch) pipe size(RJ)

f. Expansion bellows(RJ)

g. Flexible connectors(RJ)

h. Ball joints except piping between joints//(NI)

K. Apply insulation materials subject to the manufacturer's recommended temperature limits. Apply adhesives, mastic and coatings at the manufacturer's recommended minimum coverage.

L. Elbows, flanges and other fittings shall be insulated with the same material as is used on the pipe straights. // The elbow/ fitting insulation shall be field-fabricated, mitered or factory prefabricated to the necessary size and shape to fit on the elbow/ fitting.// Use of polyurethane spray-foam to fill a PVC elbow jacket is prohibited on cold applications.

M. Firestop Pipe and Duct insulation:

1. Provide firestopping insulation at fire and smoke barriers through penetrations. Fire stopping insulation shall be UL listed as defines in Section 07 84 00, FIRESTOPPING.

2. Pipe and duct penetrations requiring fire stop insulation including, but not limited to the following:

a. Pipe risers through floors

b. Pipe or duct chase walls and floors

c. Smoke partitions

d. Fire partitions

N. Freeze protection of above grade outdoor piping (over heat tracing tape): 26 mm (10 inch) thick insulation, for all pipe sizes 75 mm(3 inches) and smaller and 25 mm(1inch) thick insulation for larger pipes. Provide metal jackets for all pipes. Provide for cold water make-up to cooling towers and condenser water piping and chilled water piping as described in Section 23 21 13, HYDRONIC PIPING (electrical heat tracing systems).

O. Provide vapor barrier jackets over insulation as follows:

1. All piping and ductwork exposed to outdoor weather.

DESIGNER'S NOTE: See HVAC Design <Manual Appendix 7-A Table 7-A1 for high humidity areas. The application of vapor barriers in areas other than high humidity areas and/or for all interior piping and ductwork conveying fluids below ambient temperature is optional for the designer.

//2. All interior piping and ducts conveying fluids //exposed to outdoor air (i.e. in attics, ventilated (not air conditioned) spaces, etc.)// below ambient air temperature //in high humidity areas//.

P. Provide metal jackets over insulation as follows:

1. All piping and ducts exposed to outdoor weather.
2. Piping exposed in building, within 1800 mm (6 feet) of the floor, that connects to sterilizers, kitchen and laundry equipment. Jackets may be applied with pop rivets. Provide aluminum angle ring escutcheons at wall, ceiling or floor penetrations.
3. A 50 mm (2 inch) overlap is required at longitudinal and circumferential joints.

3.2 INSULATION INSTALLATION

A. Mineral Fiber Board:

1. Faced board: Apply board on pins spaced not more than 300 mm (12 inches) on center each way, and not less than 75 mm (3 inches) from each edge of board. In addition to pins, apply insulation bonding adhesive to entire underside of horizontal metal surfaces. Butt insulation edges tightly and seal all joints with laps and butt strips. After applying speed clips cut pins off flush and apply vapor seal patches over clips.
2. Plain board:
   a. Insulation shall be scored, beveled or mitered to provide tight joints and be secured to equipment with bands spaced 225 mm (9 inches) on center for irregular surfaces or with pins and clips on flat surfaces. Use corner beads to protect edges of insulation.
   b. For hot equipment: Stretch 25 mm (1 inch) mesh wire, with edges wire laced together, over insulation and finish with insulating and finishing cement applied in one coat, 6 mm (1/4 inch) thick, trowel led to a smooth finish.
   c. For cold equipment: Apply meshed glass fabric in a tack coat 1.5 to 1.7 square meter per liter (60 to 70 square feet per gallon) of vapor mastic and finish with mastic at 0.3 to 0.4 square meter per liter (12 to 15 square feet per gallon) over the entire fabric surface.
   d. Chilled water pumps: Insulate with removable and replaceable 1 mm thick (20 gage) aluminum or galvanized steel covers lined with insulation. Seal closure joints/flanges of covers with gasket

material. Fill void space in enclosure with flexible mineral fiber insulation.

SPEC WRITER NOTE: Provide 50 mm (2 inch) duct insulation for supply and return duct work exposed to outdoor conditions. In paragraph 3.c below delete outdoor air duct insulation in mild climates (where the design temperature difference between the interior and exterior of the duct does not exceed 8 degrees C (15 degree F)).

3. Exposed, unlined ductwork and equipment in unfinished areas, mechanical and electrical equipment rooms and attics, //interstitial spaces// and duct work exposed to outdoor weather:
   a. // 40 mm (1-1/2 inch) // 50 mm (2 inch) // thick insulation faced with ASJ (white all service jacket): Supply air duct // unlined air handling units // and after filter housing.
   b. // 40 mm (1-1/2 inch) // 50 mm (2 inch) // thick insulation faced with ASJ: Return air duct, mixed air plenums and prefilter housing.
   c. Outside air intake ducts: // no insulation required // 25 mm (one inch) thick insulation faced with ASJ.
   d. Exposed, unlined supply and return ductwork exposed to outdoor weather: 50 mm (2 inch) thick insulation faced with a reinforcing membrane and two coats of vapor barrier mastic or multi-layer vapor barrier with a maximum water vapor permeability of 0.001 perms.
4. Supply air duct in the warehouse and in the laundry: 25 mm (one inch) thick insulation faced with ASJ. //
5. Cold equipment: 40 mm (1-1/2inch) thick insulation faced with ASJ.
   a. Chilled water pumps, water filter, chemical feeder pot or tank.
   b. Pneumatic, cold storage water and surge tanks.
6. Hot equipment: 40 mm (1-1/2 inch) thick insulation faced with ASJ.

SPEC WRITER NOTE: Insulate steam condensate pump receivers, flash tanks, and similar equipment if room is very small and would become excessively hot, or if it could represent a work hazard in areas of frequent maintenance.

   a. Convertors, air separators, steam condensate pump receivers.
   b. Reheat coil casing and separation chambers on steam humidifiers located above ceilings.

c. Domestic water heaters and hot water storage tanks (not factory insulated).

d. Booster water heaters for dietetics dish and pot washers and for washdown grease-extracting hoods.

7. Laundry: Hot exhaust ducts from dryers and from ironers, where duct is exposed in the laundry.

B. Flexible Mineral Fiber Blanket:

1. Adhere insulation to metal with 75 mm (3 inch) wide strips of insulation bonding adhesive at 200 mm (8 inches) on center all around duct. Additionally secure insulation to bottom of ducts exceeding 600 mm (24 inches) in width with pins welded or adhered on 450 mm (18 inch) centers. Secure washers on pins. Butt insulation edges and seal joints with laps and butt strips. Staples may be used to assist in securing insulation. Seal all vapor retarder penetrations with mastic. Sagging duct insulation will not be acceptable. Install firestop duct insulation where required.

2. Supply air ductwork to be insulated includes main and branch ducts from AHU discharge to room supply outlets, and the bodies of ceiling outlets to prevent condensation. Insulate sound attenuator units, coil casings and damper frames. To prevent condensation insulate trapeze type supports and angle iron hangers for flat oval ducts that are in direct contact with metal duct.

3. Concealed supply air ductwork.

a. Above ceilings at a roof level, in attics, and duct work exposed to outdoor weather: 50 mm (2 inch) thick insulation faced with FSK.

b. Above ceilings for other than roof level: 40 mm (1 ½ inch) thick insulation faced with FSK.

4. Concealed return air duct:

a. //In attics (where not subject to damage) and where exposed to outdoor weather: 50mmm (2 inch)thick insulation faced with FSK, //

b. Above ceilings at a roof level, unconditioned areas, and in chases with external wall or containing steam piping; 40 mm (1-1/2 inch) thick, insulation faced with FSK.

//c. In interstitial spaces (where not subject to damage): 40 mm (1-1/2 inch thick insulation faced with FSK. //

d. Concealed return air ductwork in other locations need not be insulated.

5. Concealed outside air duct: 40 mm (1-1/2 inch) thick insulation faced with FSK.
6. Exhaust air branch duct from autopsy refrigerator to main duct: 40 mm (1-1/2 inch) thick insulation faced with FSK.

C. Molded Mineral Fiber Pipe and Tubing Covering:

1. Fit insulation to pipe or duct, aligning longitudinal joints. Seal longitudinal joint laps and circumferential butt strips by rubbing hard with a nylon sealing tool to assure a positive seal. Staples may be used to assist in securing insulation. Seal all vapor retarder penetrations on cold piping with a generous application of vapor barrier mastic. Provide inserts and install with metal insulation shields at outside pipe supports. Install freeze protection insulation over heating cable.
2. Contractor's options for fitting, flange and valve insulation:
   a. Insulating and finishing cement for sizes less than 100 mm (4 inches) operating at surface temperature of 16 degrees C (61 degrees F) or more.
   b. Factory premolded, one piece PVC covers with mineral fiber, (Form B), inserts. Provide two insert layers for pipe temperatures below 4 degrees C (40 degrees F), or above 121 degrees C (250 degrees F). Secure first layer of insulation with twine. Seal seam edges with vapor barrier mastic and secure with fitting tape.
   c. Factory molded, ASTM C547 or field mitered sections, joined with adhesive or wired in place. For hot piping finish with a smoothing coat of finishing cement. For cold fittings, 16 degrees C (60 degrees F) or less, vapor seal with a layer of glass fitting tape imbedded between two 2 mm (1/16 inch) coats of vapor barrier mastic.
   d. Fitting tape shall extend over the adjacent pipe insulation and overlap on itself at least 50 mm (2 inches).
3. Nominal thickness in millimeters and inches specified in the schedule at the end of this section.

SPEC WRITER NOTE: Specify only cellular glass, polyisocyanurate (exterior only) or phenolic closed cell insulation for chilled water piping systems conveying

fluids below ambient temperatures and/or where insulation for condensation control is specified.

D. Rigid Cellular Phenolic Foam:

1. Rigid closed cell phenolic insulation may be provided for piping, ductwork and equipment for temperatures up to 121 degrees C (250 degrees F).
2. Note the NFPA 90A burning characteristics requirements of 25/50 in paragraph 1.3.B
3. Provide secure attachment facilities such as welding pins.
4. Apply insulation with joints tightly drawn together
5. Apply adhesives, coverings, neatly finished at fittings, and valves.
6. Final installation shall be smooth, tight, neatly finished at all edges.
7. Minimum thickness in millimeters (inches) specified in the schedule at the end of this section.
8. Exposed, unlined supply and return ductwork exposed to outdoor weather: 50 mm (2 inch) thick insulation faced with a multi-layer vapor barrier with a maximum water vapor permeance of 0.00 perms.
9. Condensation control insulation: Minimum 25 mm (1.0 inch) thick for all pipe sizes.
   a. HVAC: Cooling coil condensation piping to waste piping fixture or drain inlet. Omit insulation on plastic piping in mechanical rooms.

E. Cellular Glass Insulation:

1. Pipe and tubing, covering nominal thickness in millimeters and inches as specified in the schedule at the end of this section.
2. Underground Piping Other than or in lieu of that Specified in Section 23 21 13, HYDRONIC PIPING and Section 33 63 00, STEAM ENERGY DISTRIBUTION: Type II, factory jacketed with a 3 mm laminate jacketing consisting of 3000 mm x 3000 mm (10 ft x 10 ft) asphalt impregnated glass fabric, bituminous mastic and outside protective plastic film.
   a. 75 mm (3 inches) thick for hot water piping.
   b. As scheduled at the end of this section for chilled water piping.
   c. Underground piping: Apply insulation with joints tightly butted. Seal longitudinal self-sealing lap. Use field fabricated or factory made fittings. Seal butt joints and fitting with jacketing as recommended by the insulation manufacturer. Use 100 mm (4 inch) wide strips to seal butt joints.

d. Provide expansion chambers for pipe loops, anchors and wall penetrations as recommended by the insulation manufacturer.
e. Underground insulation shall be inspected and approved by the Resident Engineer as follows:
   1) Insulation in place before coating.
   2) After coating.
f. Sand bed and backfill: Minimum 75 mm (3 inches) all around insulated pipe or tank, applied after coating has dried.

3. Cold equipment: 50 mm (2 inch) thick insulation faced with ASJ for chilled water pumps, water filters, chemical feeder pots or tanks, expansion tanks, air separators and air purgers.
4. Exposed, unlined supply and return ductwork exposed to outdoor weather: 50 mm (2 inch) thick insulation faced with a reinforcing membrane and two coats of vapor barrier mastic or multi-layer vapor barrier with a water vapor permeability of 0.00 perms.

SPEC WRITER NOTE: Polyisocyanurate insulation does not meet the 50 smoke rating and therefore shall not be specified for piping or ductwork located indoors (only suitable for exterior locations per paragraph 1.3.B).

F. Polyisocyanurate Closed-Cell Rigid Insulation:
1. Polyisocyanurate closed-cell rigid insulation (PIR) may be provided for exterior piping, equipment and ductwork for temperature up to 149 degree C (300 degree F).
2. Install insulation, vapor barrier and jacketing per manufacturer’s recommendations. Particular attention should be paid to recommendations for joint staggering, adhesive application, external hanger design, expansion/contraction joint design and spacing and vapor barrier integrity.
3. Install insulation with all joints tightly butted (except expansion) joints in hot applications).
4. If insulation thickness exceeds 63 mm (2.5 inches), install as a double layer system with longitudinal (lap) and butt joint staggering as recommended by manufacturer.
5. For cold applications, vapor barrier shall be installed in a continuous manner. No staples, rivets, screws or any other attachment device capable of penetrating the vapor barrier shall be used to attach the vapor barrier or jacketing. No wire ties capable

of penetrating the vapor barrier shall be used to hold the insulation in place. Banding shall be used to attach PVC or metal jacketing.

6. Elbows, flanges and other fittings shall be insulated with the same material as is used on the pipe straights. The elbow/ fitting insulation shall be field-fabricated, mitered or factory prefabricated to the necessary size and shape to fit on the elbow/ fitting. Use of polyurethane spray-foam to fill PVC elbow jacket is prohibited on cold applications.
7. For cold applications, the vapor barrier on elbows/fittings shall be either mastic-fabric-mastic or 2 mil thick PVDC vapor barrier adhesive tape.
8. All PVC and metal jacketing shall be installed so as to naturally shed water. Joints shall point down and shall be sealed with either adhesive or caulking (except for periodic slip joints).
9. Underground piping: Follow instructions for above ground piping but the vapor retarder jacketing shall be 6 mil thick PVDC or minimum 30 mil thick rubberized bituminous membrane. Sand bed and backfill shall be a minimum of 150 mm (6 inches) all around insulated pipe.
10. Exposed, unlined supply and return ductwork exposed to outdoor weather: 50 mm (2 inch) thick insulation faced with a multi-layer vapor barrier with a water vapor permeance of 0.00 perms.
11. Note the NFPA 90A burning characteristic requirements of 25/50 in paragraph 1.3B. Refer to paragraph 3.1 for items not to be insulated.
12. Minimum thickness in millimeter (inches) specified in the schedule at the end of this section.

SPEC WRITER NOTE: Flexible elastomeric thermal insulation may be specified in lieu of mineral fiber insulation. However its use greater than 38 mm (1-1/2 inch) thickness is restricted and shall not be specified for ceiling spaces used as unducted return air plenums.

G. Flexible Elastomeric Cellular Thermal Insulation:

1. Apply insulation and fabricate fittings in accordance with the manufacturer's installation instructions and finish with two coats of weather resistant finish as recommended by the insulation manufacturer.
2. Pipe and tubing insulation:

a. Use proper size material. Do not stretch or strain insulation.
b. To avoid undue compression of insulation, provide cork stoppers or wood inserts at supports as recommended by the insulation manufacturer. Insulation shields are specified under Section 23 05 11, COMMON WORK RESULTS FOR HVAC //and Section 23 05 10, COMMON WORK RESULTS FOR BOILER PLANT and STEAM GENERATION//.
c. Where possible, slip insulation over the pipe or tubing prior to connection, and seal the butt joints with adhesive. Where the slip-on technique is not possible, slit the insulation and apply it to the pipe sealing the seam and joints with contact adhesive. Optional tape sealing, as recommended by the manufacturer, may be employed. Make changes from mineral fiber insulation in a straight run of pipe, not at a fitting. Seal joint with tape.

3. Apply sheet insulation to flat or large curved surfaces with 100 percent adhesive coverage. For fittings and large pipe, apply adhesive to seams only.
4. Pipe insulation: nominal thickness in millimeters (inches as specified in the schedule at the end of this section.
5. Minimum 20 mm (0.75 inch) thick insulation for pneumatic control lines for a minimum distance of 6 m (20 feet) from discharge side of the refrigerated dryer.
6. Use Class S (Sheet), 20 mm (3/4 inch) thick for the following:
   a. Chilled water pumps
   b. Bottom and sides of metal basins for winterized cooling towers (where basin water is heated).
   c. Chillers, insulate any cold chiller surfaces subject to condensation which has not been factory insulated.
   d. Piping inside refrigerators and freezers: Provide heat tape under insulation.
7. Exposed, unlined supply and return ductwork exposed to outdoor weather: 50 mm (2 inch) thick insulation faced with a multi-layer vapor barrier with a water vapor permeance of 0.00 perms.

H. Duct Wrap for Kitchen Hood Grease Ducts:
1. The insulation thickness, layers and installation method shall be as per recommendations of the manufacturer to maintain the fire integrity and performance rating.
2. Provide stainless steel jacket for all exterior and exposed interior ductwork.

I. Calcium Silicate:

1. Minimum thickness in millimeter (inches) specified in the schedule at the end of this section for piping other than in boiler plant. See paragraphs 3.3 through 3.7 for Boiler Plant Applications.
2. Engine Exhaust Insulation for Emergency Generator and Diesel Driven Fire Pump: Type II, Class D, 65 mm (2 1/2 inch) nominal thickness. Cover exhaust completely from engine through roof or wall construction, including muffler. Secure with 16 AWG galvanized annealed wire or 0.38 x 12 mm 0.015 x 1/2 IN wide galvanized bands on 300 mm 12 IN maximum centers. Anchor wire and bands to welded pins, clips or angles. Apply 25 mm 1 IN hex galvanized wire over insulation. Fill voids with 6 mm 1/4 IN insulating cement.
3. ETO Exhaust (High Temperature): Type II, class D, 65 mm (2.5 inches) nominal thickness. Cover duct for entire length. Provide sheet aluminum jacket for all exterior ductwork.
4. Kitchen Exhaust Duct work: Type II, class D, 65 mm (2.5 inches) nominal thickness. Wire insulation in place with 12 gauge galvanized wire.
5. MRI Quench Vent Insulation: Type I, class D, 150 mm (6 inch) nominal thickness.

3.4 COMMISSIONING

A. Provide commissioning documentation in accordance with the requirements of section 23 08 00 – COMMISSIONING OF HVAC SYSTEMS for all inspection, start up, and contractor testing required above and required by the System Readiness Checklist provided by the Commissioning Agent.

B. Components provided under this section of the specification will be tested as part of a larger system. Refer to section 23 08 00 – COMMISSIONING OF HVAC SYSTEMS and related sections for contractor responsibilities for system commissioning.

3.5 PIPE INSULATION SCHEDULE

Provide insulation for piping systems as scheduled below:

Insulation Wall Thickness Millimeters (Inches)					
		Nominal Pipe Size Millimeters (Inches)			
Operating Temperature Range/Service	Insulation Material	Less than 25 (1)	25 – 32 (1 – 1¼)	38 – 75 (1½ - 3)	100 (4) and Above
	Insulation Wall Thickness Millimeters (Inches)				

122-177 degrees C (251-350 degrees F) (HPS, MPS)	Mineral Fiber (Above ground piping only)	75 (3)	100 (4)	113 (4.5)	113 (4.5)
93-260 degrees C (200-500 degrees F) (HPS, HPR)	Calcium Silicate	100 (4)	125 (5)	150 (6)	150 (6)
100-121 degrees C (212-250 degrees F) (HPR, MPR, LPS, vent piping from PRV Safety Valves, Condensate receivers and flash tanks)	Mineral Fiber (Above ground piping only)	62 (2.5)	62 (2.5)	75 (3.0)	75 (3.0)
100-121 degrees C (212-250 degrees F) (HPR, MPR, LPS, vent piping from PRV Safety Valves, Condensate receivers and flash tanks)	Rigid Cellular Phenolic Foam	50 (2.0)	50 (2.0)	75 (3.0)	75 (3.0)
38-94 degrees C (100-200 degrees F) (LPR, PC, HWH, HWHR, GH and GHR)	Mineral Fiber (Above ground piping only)	38 (1.5)	38 (1.5)	50 (2.0)	50 (2.0)
38-99 degrees C (100-211 degrees F) (LPR, PC, HWH, HWHR, GH and GHR)	Rigid Cellular Phenolic Foam	38 (1.5)	38 (1.5)	50 (2.0)	50 (2.0)
39-99 degrees C (100-211 degrees F) (LPR, PC, HWH, HWHR, GH and GHR)	Polyiso-cyanurate Closed-Cell Rigid (Exterior Locations only)	38 (1.5)	38 (1.5)	----	----
38-94 degrees C (100-200 degrees F) (LPR, PC, HWH, HWHR, GH and GHR)	Flexible Elastomeric Cellular Thermal (Above ground piping only)	38 (1.5)	38 (1.5)	----	----
4-16 degrees C (40-60 degrees F) (CH, CHR, GC, GCR and RS for DX refrigeration)	Rigid Cellular Phenolic Foam	38 (1.5)	38 (1.5)	38 (1.5)	38 (1.5)

4-16 degrees C (40-60 degrees F) (CH and CHR within chiller room and pipe chase and underground)	Cellular Glass Closed-Cell	50 (2.0)	50 (2.0)	75 (3.0)	75 (3.0)
4-16 degrees C (40-60 degrees F) (CH, CHR, GC, GCR and RS for DX refrigeration)	Cellular Glass Closed-Cell	38 (1.5)	38 (1.5)	38 (1.5)	38 (1.5)
4-16 degrees C (40-60 degrees F) (CH, CHR, GC and GCR (where underground)	Polyiso-cyanurate Closed-Cell Rigid	38 (1.5)	38 (1.5)	50 (2.0)	50 (2.0)
4-16 degrees C (40-60 degrees F) (CH, CHR, GC, GCR and RS for DX refrigeration)	Polyiso-cyanurate Closed-Cell Rigid (Exterior Locations only)	38 (1.5)	38 (1.5)	38 (1.5)	38 (1.5)
(40-60 degrees F) (CH, CHR, GC, GCR and RS for DX refrigeration)	Flexible Elastomeric Cellular Thermal (Above ground piping only)	38 (1.5)	38 (1.5)	38 (1.5)	38 (1.5)

- - - E N D - - -

SECTION 23 08 00

COMMISSIONING OF HVAC SYSTEMS

PART 1 - GENERAL

1.1 DESCRIPTION

A. The requirements of this Section apply to all sections of Division 23.

B. This project will have selected building systems commissioned. The complete list of equipment and systems to be commissioned is specified in Section 01 91 00 GENERAL COMMISSIONING REQUIREMENTS. The commissioning process, which the Contractor is responsible to execute, is defined in Section 01 91 00 GENERAL COMMISSIONING REQUIREMENTS. A Commissioning Agent (CxA) appointed by the Owner will manage the commissioning process.

1.2 RELATED WORK

A. Section 01 00 00 GENERAL REQUIREMENTS.

B. Section 01 33 00 SHOP DRAWINGS, PRODUCT DATA, AND SAMPLES.

C. Section 01 91 00 GENERAL COMMISSIONING REQUIREMENTS.

D. Section 23 05 41 NOISE AND VIBRATION CONTROL for HVAC PIPING AND EQUIPMENT.

E. Section 23 05 93 TESTING, ADJUSTING, AND BALANCING FOR HVAC.

F. Section 23 09 23 DIRECT-DIGITAL CONTROL SYSTEM FOR HVAC.

G. Examine all drawings and criteria sheets and all other Sections of the Specifications for requirements, which affect work under this Section whether or not such work is specifically mentioned in this Section.

1.3 SUMMARY

A. This Section includes requirements for commissioning the HVAC systems of the related subsystems and equipment. This Section supplements the general requirements specified in Section 01 91 00 GENERAL COMMISSIONING REQUIREMENTS.

B. Refer to Section 01 91 00 GENERAL COMMISSIONING REQUIREMENTS for more details regarding processes and procedures as well as roles and responsibilities for all Commissioning Team members.

1.4 DEFINITIONS

A. Refer to Section 01 91 00 GENERAL COMMISSIONING REQUIREMENTS for definitions.

1.5 COMMISSIONED SYSTEMS

A. Commissioning of a system or systems specified in Division 23 is part of the construction process. Documentation and testing of these systems, as well as training of the VA's Operation and Maintenance personnel in accordance with the requirements of Section 01 91 00 GENERAL COMMISSIONING REQUIREMENTS and of Division 23, is required in cooperation with the Owner and the Commissioning Agent.

B. The Facility HVAC systems commissioning will include the systems listed in Section 01 91 00 GENERAL COMMISSIONING REQUIREMENTS.

1.6 SUBMITTALS

A. The commissioning process requires review of selected Submittals that pertain to the systems to be commissioned. The Commissioning Agent will provide a list of submittals that will be reviewed by the Commissioning Agent. This list will be reviewed and approved by the Owner prior to forwarding to the Contractor. Refer to Section 01 33 23 SHOP DRAWINGS, PRODUCT DATA, and SAMPLES for further details.

B. The commissioning process requires Submittal review simultaneously with engineering review. Specific submittal requirements related to the commissioning process are specified in Section 01 91 00 GENERAL COMMISSIONING REQUIREMENTS.

1.7 APPLICABLE PUBLICATIONS

A. The following publications form a part of this specification to the extent indicated by the reference thereto. In text the publications are referenced to by the acronym of the organization.

B. American Society of Heating, Refrigerating and Air Conditioning Engineers, Inc. (ASHRAE):

HANDBOOK 2019.....HVAC Applications ASHRAE Handbook, Chapter 39, Testing, Adjusting, and Balancing, Chapter 44, HVAC Commissioning and Chapter 49, Sound and Vibration Control

HANDBOOK 2017.....HVAC Fundamentals ASHRAE Handbook, Chapter 8, Sound and Vibration

D. Associated Air Balance Council (AABC):

7th Edition 2016.....AABC National Standards for Total System Balance

E. National Environmental Balancing Bureau (NEBB):

9th Edition 2019.....Procedural Standards for Testing, Adjusting, Balancing of Environmental Systems

3rd Edition 2015 .....Procedural Standards for the Measurement of Sound and Vibration

2rd Edition 2019 ... Standard for Whole Building Technical Commissioning of New Construction

F. Sheet Metal and Air Conditioning Contractors National Association (SMACNA):

006 2006.....HVAC Duct Construction Standard – Metal and Flexible Duct

3rd Edition 2005 ... HVAC Systems Testing, Adjusting and Balancing

PART 2 - PRODUCTS (NOT USED)

PART 3 - EXECUTION

3.1 CONSTRUCTION INSPECTIONS

A. Commissioning of HVAC systems will require inspection of individual elements of the HVAC systems construction throughout the construction period. The Contractor shall coordinate with the Commissioning Agent in accordance with Section 01 91 00 GENERAL COMMISSIONING REQUIREMENTS and the Commissioning plan to schedule HVAC systems inspections as required to support the Commissioning Process.

3.2 PRE-FUNCTIONAL CHECKLISTS

A. The Contractor shall complete Pre-Functional Checklists to verify systems, subsystems, and equipment installation is complete and systems are ready for Systems Functional Performance Testing. The Commissioning Agent will prepare Pre-Functional Checklists to be used to document equipment installation. Refer to Sections 23 05 41 NOISE AND VIBRATION CONTROL for HVAC PIPING AND EQUIPMENT, Section 23 05 93 TESTING, ADJUSTING, AND BALANCING FOR HVAC and Section 23 09 23 DIRECT-DIGITAL CONTROL SYSTEM FOR HVAC requirements. The Contractor shall complete the checklists. Completed checklists shall be submitted to the Owner and to the Commissioning Agent for review. The Commissioning Agent may spot check a sample of completed checklists. If the Commissioning Agent determines that the information provided on the checklist is not accurate, the Commissioning Agent will return the marked-up checklist to the Contractor for correction and resubmission. If the Commissioning Agent determines that a significant number of completed checklists for similar equipment are not accurate, the Commissioning Agent will select a broader sample of checklists for review. If the Commissioning Agent determines that a significant number of the broader sample of checklists is also inaccurate, all the

checklists for the type of equipment will be returned to the Contractor for correction and resubmission. Refer to SECTION 01 91 00 GENERAL COMMISSIONING REQUIREMENTS for submittal requirements for Pre-Functional Checklists, Equipment Startup Reports, and other commissioning documents.

3.3 CONTRACTORS TESTS

A. Contractor tests as required by other sections of Division 23 shall be scheduled and documented in accordance with Section 01 00 00 GENERAL REQUIREMENTS. All testing shall be incorporated into the project schedule. Contractor shall provide no less than 7 calendar days' notice of testing. The Commissioning Agent will witness selected Contractor tests at the sole discretion of the Commissioning Agent. Contractor tests shall be completed prior to scheduling Systems Functional Performance Testing.

3.4 SYSTEMS FUNCTIONAL PERFORMANCE TESTING:

A. The Commissioning Process includes Systems Functional Performance Testing that is intended to test systems functional performance under steady state conditions, to test system reaction to changes in operating conditions, and system performance under emergency conditions. The Commissioning Agent will prepare detailed Systems Functional Performance Test procedures for review and approval by the Resident Engineer. The Contractor shall review and comment on the tests prior to approval. The Contractor shall provide the required labor, materials, and test equipment identified in the test procedure to perform the tests. The Commissioning Agent will witness and document the testing. The Contractor shall sign the test reports to verify tests were performed. See Section 01 91 00 GENERAL COMMISSIONING REQUIREMENTS, for additional requirements.

3.5 TRAINING OF OWNER PERSONNEL

A. Training of the Owner operation and maintenance personnel is required in cooperation with the Resident Engineer and Commissioning Agent. Provide competent, factory authorized personnel to provide instruction to operation and maintenance personnel concerning the location, operation, and troubleshooting of the installed systems. Contractor shall submit training agendas and trainer resumes in accordance with the requirements of Section 01 91 00 GENERAL COMMISSIONING REQUIREMENTS. The instruction shall be scheduled in coordination with the Owner's Appointed Resident Engineer after submission and approval

of formal training plans. Refer to Section 01 91 00 GENERAL COMMISSIONING REQUIREMENTS and Division 23 Sections for additional Contractor training requirements.

----- END -----

SECTION 23 09 23
DIRECT-DIGITAL CONTROL SYSTEM FOR HVAC

PART 1 – GENERAL

1.1 DESCRIPTION

A. The control system(s) shall be as indicated on the project documents, point list, drawings and described in these specifications. This scope of work shall include a complete and working system including all engineering, programming, controls and installation materials, installation labor, commissioning and start-up, training, final project documentation and warranty.

B. Engineering Control Center (ECC) shall include:
   1. Operator Workstation Web-Browser User Interface (UI).
   2. Ethernet, IP Supervisory Network.
   3. Portable Laptop servicing device with software.
   4. Graphic Operational Interface.
   5. Software Configuration Tools (SCT).
   6. Scheduling and Alarm Management software.
   7. Local LonWorks FTT-10 or 1250 networks.
   8. Network Area Controllers (NAC).
   9. Data and File Server (DFS).
   10. Unitary Control Units (UCU).
   11. LonMark Compliant Application Controllers and field devices.
   12. Connected I/O devices.
   13. Third party system Data Integration.

C. The Controls Contractor’s work shall include all labor, materials, special tools, equipment, enclosures, power supplies, software, software licenses, Project specific software configurations and database entries, interfaces, wiring, tubing, installation, labeling, engineering, calibration, documentation, submittals, testing, verification, training services, permits and licenses, transportation, shipping, handling, administration, supervision, management, insurance, Warranty, specified services and items required by the Contract for the complete and fully functional Controls Systems.

D. Following control devices and systems shall be used to provide the functional requirements of HVAC equipment and systems.
   1. Direct Digital Control (DDC) of HVAC equipment and systems with electric or electronic positioning of valves and dampers.

2. Terminal units including VAV Boxes, Air Valves, Reheat Coils, Base Board Heaters, Secondary Humidifiers and similar units for control of room environment conditions may be equipped with integral controls furnished and installed by the equipment manufacturer or field mounted. Refer to equipment specifications and as indicated in project documents.

F. Integrate the new work to existing ECC system or operator workstation manufactured by, as specified, located per, as specified per owner indications. The existing CPU/Monitor, printer, and other peripherals may be used to form a single operator workstation. New system including interface to existing systems and equipment shall operate and function as one complete system including one database of control point objects and global control logic capabilities. Facility operators shall have complete operations and control capability over all systems, new and existing including; monitoring, trending, graphing, scheduling, alarm management, global point sharing, global strategy deployment, graphical operations interface and custom reporting as specified. Modify the existing ECC, if necessary, to accommodate the additional control points.

G. The control subcontractor shall supply as required, all necessary hardware equipment and software packages to interface between any existing and new system Network Area Controllers (NAC) as part of this contract. Number of area controllers required is dependent on the type and quantity of devices, hardware and software points provided. Network area controllers are same as remote controller units (RCU).

H. The control systems shall be designed such that each mechanical system shall operate under stand-alone mode. Temperature Controls contractor shall provide controllers for each mechanical system. In the event of a network communication failure, or the loss of any other controller, the control system shall continue to operate independently. Failure of the ECC shall have no effect on the field controllers, including those involved with global strategies.

I. The Top End of the NAC shall communicate using American Society of Heating and Refrigerating Engineers/American National Standards Institute (ASHRAE/ANSI) Standard 135(BACnet) protocol. The NAC shall reside on the BACnet/IP Ethernet (ISO 8802-3) local area network, and provide information via standard BACnet object types and application services. The Bottom End of the NAC, the unit level controllers and all

other field devices shall reside on the LonTalk FTT-10a network, and provide data using LonMark standard network variable types and configuration properties.

J. The intent of this specification is to provide a peer-to peer networked, stand-alone, distributed control system. The ECC requires the incorporation of LonWorks Technologies using Free Topology Transceivers (FTT-10), and specific conformance to the LONMARK Interoperability Association's v3.0 Physical and logical Layer guidelines in all (NAC) Network Area Controllers, Remote Control Unit controllers, unitary terminal unit controllers and other LonMark compliant field devices. The minimum Baud rate shall be 78,000 Baud for FTT-10 and 1,250,000 Baud for FTT-1250.
   1. LonTalk communications protocol will be used on the communication network between RCU controllers and LonWorks controllers and devices to assure interoperability between all devices within the network.
   2. The ECC shall provide communication to all LonTalk data variables as defined in input/output point schedule and as required to accomplish sequence of operation as specified.
   3. Power wiring shall not be run in conduit with communications trunk wiring or signal or control wiring operating at 100 volts or less.

K. The control system shall accommodate 5 users simultaneously, and the access to the system should be limited only by operator password.

1.2 RELATED WORK

A. Section 23 05 11, COMMON WORK RESULTS FOR HVAC AND STEAM GENERATION.
B. Section 23 64 00, PACKAGED WATER CHILLERS.
C. Section 23 21 13, HYDRONIC PIPING
D. Section 23 36 00, AIR TERMINAL UNITS.
E. Section 23 73 00, INDOOR CENTRAL-STATION AIR-HANDLING UNITS.
F. Section 23 31 00, HVAC DUCTS AND CASINGS.
G. Section 23 05 93, TESTING, ADJUSTING, AND BALANCING FOR HVAC.
H. Section 26 05 11, REQUIREMENTS FOR ELECTRICAL INSTALLATIONS.
I. Section 26 05 33, RACEWAY AND BOXES FOR ELECTRICAL SYSTEMS.
J. Section 26 05 21, LOW-VOLTAGE ELECTRICAL POWER CONDUCTORS AND CABLES (600 VOLTS AND BELOW).
K. Section 26 27 26, WIRING DEVICES.
L. Examine all drawings and criteria sheets and all other Sections of the Specifications for requirements, which affect work under this Section whether or not such work is specifically mentioned in this Section.

1.3 DEFINITION

A. Algorithm: A logical procedure for solving a recurrent mathematical problem; A prescribed set of well-defined rules or processes for the solution of a problem in a finite number of steps.

B. ACU: Auxiliary Control Unit (ACU) used for controls of air handling units, reports to RCU.

C. Analog: A continuously varying signal value (e.g., temperature, current, velocity etc.

D. BACnet: Building Automation Control Network Protocol, ASHRAE Standard 135.

E. Baud: It is a signal change in a communication link. One signal change can represent one or more bits of information depending on type of transmission scheme. Simple peripheral communication is normally one bit per Baud. (e.g., Baud rate = 78,000 Baud/sec is 78,000 bits/sec, if one signal change = 1 bit).

F. Binary: A two-state system where a high signal level represents an "ON" condition and an "OFF" condition is represented by a low signal level.

G. BMP or bmp: Suffix, computerized image file, used after the period in a DOS-based computer file to show that the file is an image stored as a series of pixels.

H. Bus Topology: A network topology that physically interconnects workstations and network devices in parallel on a network segment.

I. Control Unit (CU): Generic term for any controlling unit, stand-alone, microprocessor based, digital controller residing on secondary LAN or Primary LAN, used for local controls or global controls. In this specification, there are three types of control units are used; Unitary Control Unit (UCU), Auxiliary Control Unit (ACU), and Remote Control Unit (RCU).

J. Deadband: A temperature range over which no heating or cooling is supplied, i.e., 22-25 degrees C (72-78 degrees F), as opposed to a single point change over or overlap).

K. Diagnostic Program: A software test program, which is used to detect and report system or peripheral malfunctions and failures. Generally, this system is performed at the initial startup of the system.

L. Direct Digital Control (DDC): Microprocessor based control including Analog/Digital conversion and program logic. A control loop or subsystem in which digital and analog information is received and processed by a microprocessor, and digital control signals are

generated based on control algorithms and transmitted to field devices in order to achieve a set of predefined conditions.

M. Distributed Control System: A system in which the processing of system data is decentralized and control decisions can and are made at the subsystem level. System operational programs and information are provided to the remote subsystems and status is reported back to the Engineering Control Center. Upon the loss of communication with the Engineering Control center, the subsystems shall be capable of operating in a stand-alone mode using the last best available data.

N. Download: The electronic transfer of programs and data files from a central computer or operation workstation with secondary memory devices to remote computers in a network (distributed) system.

O. DXF: An AutoCAD 2-D graphics file format. Many CAD systems import and export the DXF format for graphics interchange.

P. Electrical Control: A control circuit that operates on line or low voltage and uses a mechanical means, such as a temperature sensitive bimetal or bellows, to perform control functions, such as actuating a switch or positioning a potentiometer.

Q. Electronic Control: A control circuit that operates on low voltage and uses a solid-state components to amplify input signals and perform control functions, such as operating a relay or providing an output signal to position an actuator.

R. Engineering Control Center (ECC): The centralized control point for the intelligent control network. The ECC comprises of personal computer and connected devices to form a single workstation.

S. Ethernet: A trademark for a system for exchanging messages between computers on a local area network using coaxial, fiber optic, or twisted-pair cables.

T. Firmware: Firmware is software programmed into read only memory (ROM) chips. Software may not be changed without physically altering the chip.

U. FTT-10: Echelon Transmitter-Free Topology Transceiver.

V. GIF: Abbreviation of Graphic interchange format.

W. Graphic Program (GP): Program used to produce images of air handler systems, fans, chillers, pumps, and building spaces. These images can be animated and/or color-coded to indicate operation of the equipment.

X. Graphic Sequence of Operation: It is a graphical representation of the sequence of operation, showing all inputs and output logical blocks.

Y. I/O Unit: The section of a digital control system through which information is received and transmitted. I/O refers to analog input (AI, digital input (DI), analog output (AO) and digital output (DO). Analog signals are continuous and represent temperature, pressure, flow rate etc, whereas digital signals convert electronic signals to digital pulses (values), represent motor status, filter status, on-off equipment etc.

Z. I/P: Internet Protocol-global network, connecting workstations and other host computers, servers etc. to share the information.

AA. JPEG: A standardized image compression mechanism stands for Joint Photographic Experts Group, the original name of the committee that wrote the standard.

BB. Local Area Network (LAN): A communication bus that interconnects operator workstation and digital controllers for peer-to-peer communications, sharing resources and exchanging information.

CC. LonMark: An association comprising of suppliers and installers of LonTalk products. The Association provides guidelines for the implementation of the LonTalk protocol to ensure interoperability through Standard implementation.

DD. LonTalk: An open standard protocol developed by the Echelon Corporation that uses a “Neuron Chip” for communication.

EE. LonWorks: Network technology developed by the Echelon Corporation.

FF. Network: A set of computers or other digital devices communicating with each other over a medium such as wire, coax, fiber optics cable etc.

GG. Network Area Controller: Digital controller, supports a family of auxiliary control units and unitary control units, and communicates with peer-to-peer network for transmission of global data.

HH. Network Repeater: A device that receives data packet from one network and rebroadcasts to another network. No routing information is added to the protocol.

II. MS/TP: Master-slave/token-passing.

JJ. Operating system (OS): Software, which controls the execution of computer application programs.

KK. PCX: File type for an image file. When photographs are scanned onto a personal computer they can be saved as PCX files and viewed or changed by a special application program as Photo Shop.

LL. Peripheral: Different components that make the control system function as one unit. Peripherals include monitor, printer, and I/O unit.

MM. Peer-to-Peer: A networking architecture that treats all network stations as equal partners.

NN. PICS: Protocol Implementation Conformance Statement.

OO. UCU: Unitary Control Unit, digital controller, dedicated to a specific piece of equipment, such as VAV boxes, chillers, fan coil units, heat exchangers etc.

1.4 QUALITY ASSURANCE

A. Criteria:

1. The Controls and Instrumentation System Contractor shall be a primary equipment manufacturer-owned branch office that is regularly engaged in the engineering, programming, installation and service of total integrated Facility Management Systems of similar size, scope and complexity to the EEC specified in this Contract. Distributors, manufacturer's representatives and wholesalers will not be acceptable.
2. Single Source Responsibility of subcontractor: The Contractor shall obtain hardware and software supplied under this Section and delegates the responsibility to a single source controls installation subcontractor. The controls subcontractor shall be responsible for the complete design, installation, and commissioning of the system. The controls subcontractor shall be in the business of design, installation and service of such building automation control systems similar in size and complexity.
3. Equipment and Materials: Equipment and materials shall be cataloged products of manufacturers regularly engaged in production and installation of HVAC control systems. Products shall be manufacturer's latest standard design and have been tested and proven in actual use.
4. The controls subcontractor shall provide a list of no less than five similar projects which have building control systems as specified in this Section. These projects must be on-line and functional such that the Department of Veterans Affairs (Owner) representative would observe the control systems in full operation.
5. The controls subcontractor shall have (minimum of three years) experience in design and installation of building automation systems similar in performance to those specified in this Section. Provide evidence of experience by submitting resumes of the project manager, the local branch manager, project engineer, the application

engineering staff, and the electronic technicians who would be involved with the supervision, the engineering, and the installation of the control systems. Training and experience of these personnel shall not be less than three years. Failure to disclose this information will be a ground for disqualification of the supplier.

6. The controls subcontractor shall have in-place facility within 50 miles with technical staff, spare parts inventory for the next five (5) years, and necessary test and diagnostic equipment to support the control systems.
7. Provide a competent and experienced Project Manager employed by the Controls Contractor. The Project Manager shall be supported as necessary by other Contractor employees in order to provide professional engineering, technical and management service for the work. The Project Manager shall attend scheduled Project Meetings as required and shall be empowered to make technical, scheduling and related decisions on behalf of the Controls Contractor.

B. Codes and Standards:

1. All work shall conform to the applicable Codes and Standards.
2. Electronic equipment shall conform to the requirements of FCC Regulation, Part 15, Governing Radio Frequency Electromagnetic Interference, and be so labeled.
3. Peer-to-peer controllers, unitary controllers shall conform to the requirements of UL 916, Category PAZX.

1.5 PERFORMANCE

A. The system shall conform to the following:

1. Graphic Display: The system shall display up to 4 graphics on a single screen with a minimum of (20) dynamic points per graphic. All current data shall be displayed within (10) seconds of the request.
2. Graphic Refresh: The system shall update all dynamic points with current data within (10) seconds. Data refresh shall be automatic, without operator intervention.
3. Object Command: The maximum time between the command of a binary object by the operator and the reaction by the device shall be (10) seconds. Analog objects shall start to adjust within (3) seconds.
4. Object Scan: All changes of state and change of analog values shall be transmitted over the high-speed network such that any data used or displayed at a controller or work-station will be current, within the prior (10) seconds.

5. Alarm Response Time: The maximum time from when an object goes into alarm to when it is annunciated at the workstation shall not exceed (10) seconds.
6. Program Execution Frequency: Custom and standard applications shall be capable of running as often as once every (5) seconds. The Contractor shall be responsible for selecting execution times consistent with the mechanical process under control.
7. Performance: Programmable Controllers shall be able to execute DDC PID control loops at a selectable frequency from at least once every five (5) seconds. The controller shall scan and update the process value and output generated by this calculation at this same frequency.
8. Multiple Alarm Annunciations: All workstations on the network shall receive alarms within (5) seconds of each other.
9. Reporting Accuracy: Listed below are minimum acceptable reporting accuracies for all values reported by the specified system, as applicable:

Measured Variable	**Reported Accuracy**
Space temperature	±0.5 degrees C (±1 degrees F)
Ducted air temperature	±1.0 degrees C [±2 degrees F]
Outdoor air temperature	±1.0 degrees C [±2 degrees F]
Water temperature	±0.5 degrees C [±1 degrees F]
Relative humidity	±2 percent RH
Water flow	±5 percent of full scale
Air flow (terminal)	±10 percent of reading
Air flow (measuring stations)	±5 percent of reading
Air pressure (ducts)	±25 Pa [±0.1 "W.G.]
Air pressure (space)	±3 Pa [±0.001 "W.G.]
Water pressure	±2 percent of full scale *Note 1
Electrical Power	5 percent of reading

Note 1: for both absolute and differential pressure

1.6 WARRANTY

A. Labor and materials for control systems shall be warranted for a period as specified under Warranty in Section 01 00 00, GENERAL CONDITIONS.

B. Control system failures during the warranty period shall be adjusted, repaired, or replaced at no cost or reduction in service to the owner.

The system includes all computer equipment, transmission equipment, and all sensors and control devices.

C. Controls and Instrumentation subcontractor shall be responsible for temporary operations and maintenance of the control systems during the construction period until final commissioning, training of facility operators and acceptance of the project by Owner.

1.7 SUBMITTALS

A. Submit shop drawings in accordance with Section 01 33 23, SHOP DRAWINGS, PRODUCT DATA, AND SAMPLES.

B. Manufacturer’s literature and data for all components including the following:

1. A wiring diagram for each type of input device and output device including DDC controllers, modems, repeaters, etc. Diagram shall show how the device is wired and powered, showing typical connections at the digital controllers and each power supply, as well as the device itself. Show for all field connected devices, including but not limited to, control relays, motor starters, electric or electronic actuators, and temperature pressure, flow and humidity sensors and transmitters.
2. A diagram of each terminal strip, including digital controller terminal strips, terminal strip location, termination numbers and the associated point names.
3. Control dampers and control valves schedule, including the size and pressure drop.
4. Installation instructions for smoke dampers and combination smoke/fire dampers, if furnished.
5. Control air-supply components, and computations for sizing compressors, receivers and main air-piping, if pneumatic controls are furnished.
6. Catalog cut sheets of all equipment used. This includes, but is not limited to DDC controllers, panels, peripherals, airflow measuring stations and associated components, and auxiliary control devices such as sensors, actuators, and control dampers. When manufacturer’s cut sheets apply to a product series rather than a specific product, the data specifically applicable to the project shall be highlighted. Each submitted piece of literature and drawings should clearly reference the specification and/or drawings that it supposed to represent.

7. Sequence of operations for each HVAC system and the associated control diagrams. Equipment and control labels shall correspond to those shown on the drawings.
8. Color prints of proposed graphics with a list of points for display.
9. Furnish PICS for each BACNET compliant device.

C. Product Certificates: Compliance with Article, QUALITY ASSURANCE.

D. As Built Control Drawings:
1. Furnish three (3) copies of as-built drawings for each control system. The documents shall be submitted for approval prior to final completion.
2. Furnish one (1) stick set of applicable control system prints for each mechanical system for wall mounting. The documents shall be submitted for approval prior to final completion.
3. Furnish one (1) CD-ROM in CAD DWG and/or .DXF format for the drawings noted in subparagraphs above.

E. Operation and Maintenance (O/M) Manuals):
1. Submit in accordance with Article, INSTRUCTIONS, in Specification Section 01 00 00, GENERAL REQUIREMENTS.
2. Include the following documentation:
   a. General description and specifications for all components, including logging on/off, alarm handling, producing trend reports, overriding computer control, and changing set points and other variables.
   b. Detailed illustrations of all the control systems specified for ease of maintenance and repair/replacement procedures, and complete calibration procedures.
   c. One copy of the final version of all software provided including operating systems, programming language, operator workstation software, and graphics software.
   d. Complete troubleshooting procedures and guidelines for all systems.
   e. Complete operating instructions for all systems.
   f. Recommended preventive maintenance procedures for all system components including a schedule of tasks for inspection, cleaning and calibration. Provide a list of recommended spare parts needed to minimize downtime.
   g. Licenses, guaranty, and other pertaining documents for all equipment and systems.

h. Training Manuals: Submit the course outline and training material to the Owner for approval three (3) weeks prior to the training to Owner personnel. These persons will be responsible for maintaining and the operation of the control systems, including programming. The Owner reserves the right to modify any or all of the course outline and training material.

F. Submit Performance Report to Resident Engineer prior to final inspection.

1.8 INSTRUCTIONS

A. Instructions to Owner operations personnel: Perform in accordance with Article, INSTRUCTIONS, in Specification Section 01 00 00, GENERAL REQUIREMENTS, and as noted below.

1. First Phase: Formal instructions to the Owner facilities personnel for a total of 16 hours, conducted sometime between the completed installation and prior to the performance test period of the control system, at a time mutually agreeable to the Contractor and the Owner.
2. Second Phase: This phase of training shall comprise of on the job training during start-up, checkout period, and performance test period. Owner facilities personnel will work with the Contractor’s installation and test personnel on a daily basis during start-up and checkout period. During the performance test period, controls subcontractor will provide 8 hours of instructions to the Owner facilities personnel.
3. The O/M Manuals shall contain approved submittals as outlined in Article 1.7, SUBMITTALS. The Controls subcontractor will review the manual contents with Owner facilities personnel during second phase of training.
4. Training by independent or franchised dealers who are not direct employees of the controls supplier will not be acceptable.

1.9 PROJECT CONDITIONS (ENVIRONMENTAL CONDITIONS OF OPERATION)

A. The ECC and peripheral devices and system support equipment shall be designed to operate in ambient condition of 20 to 35 degrees C (65 to 90 degrees F) at a relative humidity of 20 to 80 percent non-condensing.

B. The CUs and associated equipment used in controlled environment shall be mounted in NEMA 1 enclosures for operation at 0 to 50 degrees C (32

to 122 degrees F) at a relative humidity of 10 to 90 percent non-condensing.

C. The CUs used outdoors shall be mounted in NEMA 4 waterproof enclosures, and shall be rated for operation at -40 to 65 degrees C (-40 to 150 degrees F).

D. All electronic equipment shall operate properly with power fluctuations of plus 10 percent to minus 15 percent of nominal supply voltage.

E. Sensors and controlling devices shall be designed to operate in the environment, which they are sensing or controlling.

1.10 APPLICABLE PUBLICATIONS

A. The publications listed below form a part of this specification to the extent referenced. The publications are referenced in the text by the basic designation only.

B. American Society of Heating, Refrigerating, and Air-Conditioning Engineers (ASHRAE):

Standard 135-04.....BACNET Building Automation and Control Networks

C. American Society of Mechanical Engineers (ASME):

B16.18-01.....Cast Copper Alloy Solder Joint Pressure Fittings.

B16.22-01.....Wrought Copper and Copper Alloy Solder Joint Pressure Fittings.

BPVC-CC-N-04.....Boiler and Pressure Vessel Code

D. American Society of Testing Materials (ASTM):

B32-04.....Standard Specification for Solder Metal

B88-03.....Standard Specifications for Seamless Copper Water Tube

B88M-05.....Standard Specification for Seamless Copper Water Tube (Metric)

B280-03.....Standard Specification for Seamless Copper Tube for Air-Conditioning and Refrigeration Field Service

D2737-03.....Standard Specification for Polyethylene (PE) Plastic Tubing

E. Federal Communication Commission (FCC):

Rules and Regulations Title 47 Chapter 1-2001 Part 15..Radio Frequency Devices.

F. Institute of Electrical and Electronic Engineers (IEEE):

802.3-05.....Information Technology-Telecommunications and Information Exchange between Systems-Local and Metropolitan Area Networks- Specific Requirements-Part 3: Carrier Sense Multiple Access with Collision Detection (CSMA/CD) Access method and Physical Layer Specifications

G. Instrument Society of America (ISA):

7.0.01-1996.....Quality Standard for Instrument Air

H. National Fire Protection Association (NFPA):

70-05.....National Electric Code

90A-02.....Standard for Installation of Air-Conditioning and Ventilation Systems

I. Underwriter Laboratories Inc (UL):

94-06.....Tests for Flammability of Plastic Materials for Parts and Devices and Appliances

294-05.....Access Control System Units

486A/486B-04-.....Wire Connectors

555S-03.....Standard for Smoke Dampers

916-Rev 2-04.....Energy Management Equipment

1076-05.....Proprietary Burglar Alarm Units and Systems

PART 2 – PRODUCTS

2.1 CONTROLS SYSTEM ARCHITECTURE

A. General

1. The Controls Systems shall consist of multiple Nodes and associated equipment connected by industry standard digital and communication network arrangements.
2. The Operator Workstations, Servers and principal network computer equipment shall be standard products of recognized major manufacturers available through normal PC and computer vendor channels – not "Clones" assembled by a third-party subcontractor.
3. Provide licenses for all software residing on and used by the Controls Systems and transfer these licenses to the Owner prior to completion.
4. The networks shall, at minimum, comprise, as necessary, the following:
   a. Operator Workstations – fixed and portable as required by the Specifications.

b. Network computer processing, data storage and communication equipment including Servers and digital data processors.
c. Routers, bridges, switches, hubs, modems, interfaces and the like communication equipment.
d. Active processing network area controllers connected to programmable field panels and controllers together with their power supplies and associated equipment.
e. Addressable elements, sensors, transducers and end devices.
f. Third-party equipment interfaces as required by the Contract Documents.
g. Other components required for a complete and working Control Systems as specified.

B. The Specifications for the individual elements and component subsystems shall be minimum requirements and shall be augmented as necessary by the Contractor to achieve both compliance with all applicable codes, standards and to meet all requirements of the Contract Documents.

C. Network Architecture
1. The Controls Systems Application network shall utilize an open architecture capable of each and all of the following:
a. Utilizing standard Ethernet communications and operate at a minimum speed of 10/100 Mb/sec.
b. Connecting via BACNET with ANSI/ASHRAE Standard 135.
c. LonMark as per ANSI/EIA 709 (LonWorks) to LonMark FTT-10 transceivers.
2. The networks shall utilize only copper and optical fiber communication media as appropriate and shall comply with applicable codes, ordinances and regulations.
3. All necessary telephone lines, ISDN lines and internet Service Provider services and connections will be provided by the owner.
4. The Controls Contractor shall provide all IT interfacing equipment and cabling to a detail coordinated with the Owner.

D. Third Party Interfaces:
1. The Controls Systems shall include necessary hardware, equipment and software to allow data communications between the Controls Systems and building systems supplied by other trades.
2. The other manufacturers and contractors supplying other associated systems and equipment will provide their necessary hardware, software and start-up at their cost and will cooperate fully with

the Controls Contractor in a timely manner and at their cost to ensure complete functional integration.

E. Servers:

1. Provide Controls Systems Application Server(s) to archive historical data including trends, alarm and event histories and transaction logs.
2. Equip these Server(s) with the same software Tool Set that is located in the Network Area Controllers for system configuration and custom logic definition and color graphic configuration.
3. Access to all information on the Controls Systems Server(s) shall be through the same browser Operator Interface functionality used to access individual nodes. When logged onto a Server the Operator will be able to also interact with any other NAC on the Controls As required for the functional operation of the Controls Systems, the Controls Contractor shall provide all necessary digital processor programmable Server(s). These Server(s) shall be utilized for Controls Systems Application configuration, for archiving, reporting and trending of data, for Operator transaction archiving and reporting, for network information management, for alarm annunciation, for Operator Interface tasks, for Controls Application management and the like. These Server(s) shall utilize IT industry standard data base platforms such as Microsoft SQL Server and Microsoft Data Engine (MSDE) or approved equal.

2.2 DIRECT DIGITAL CONTROLLERS

A. (NAC) Network Area Controllers shall be stand-alone, multi-tasking, multi-user, real-time digital processor complete with all hardware, software, and communications interfaces, power supplies. The Controls System shall be designed and implemented entirely for use and operation on the Internet. NACs shall have access to data within the industry standard IT network to the Data Server and other NACs as needed to accomplish required global control strategies.

1. NACs shall provide both standalone and networked direct digital control of mechanical and electrical building system controllers as required by the Specifications. The primary NAC shall support a minimum of [5,000] field points together with all associated features, sequences, schedules, applications required for a fully functional distributed processing operation.

2. NACs shall monitor and report communication status to the Controls Systems Application. The Controls Systems shall provide a system advisory upon communication failure and restoration.
3. All NACs on the network shall be equipped with all software functionality necessary to operate the complete user interface, including graphics, via a Browser connected to the Node on the network or directly via a local port on the NAC.
4. All NAC shall be provided with face mounted LED type annunciation to continually display its operational mode, power and communications.
5. The controllers shall reside on the BACnet Ethernet (ISO 8802-3) local area network and provide Read (Initiate) and Write (Execute) services as defined in Clauses 15.5 and 15.8, respectively of ASHRAE Standard 135, to communicate BACnet objects. Objects supported shall include: Analog input, analog output, analog value, binary input, binary output, binary value, and device.
6. Each NAC shall be provided with the necessary un-interruptible power facilities to ensure its continued normal operation during periods of line power outages of, at minimum, 1-minute duration. Normal functionality shall include all normal software processing, communication with powered field devices and network communications with other powered Controls Systems NAC, Data Servers and OWS. Each NAC shall report its communication status to the Application. The Application shall provide a system advisory upon communication failure and restoration. Each NAC shall retain program, control algorithms, and setpoint information in non-volatile memory in the event of a power failure, and shall return to normal operation upon restoration of power.
7. Each NAC shall have sufficient memory to support its operating system, database, and program requirements, including the following:
   a. Device and network management.
   b. Data sharing.
   C. Alarm and event management including custom alarm messages for each level alarm for the points noted in the I/O Schedule.
   d. Energy management.
   e. Historical trend data for points specified.
   f. Maintenance report.
   g. Scheduling.
   h. Dial up and network communications.

i. Manual override monitoring.

8. Each NAC shall support firmware upgrades without the need to replace hardware and shall have a minimum of 15 percent spare capacity of secondary system controllers, point capacity and programming functions.
9. Each NAC shall continuously perform self-diagnostics, communication diagnosis, and provide both local and remote annunciation of any detected component failures, low battery condition; and upon failure shall assume the predetermined failure mode.
10. Each NAC shall monitor the status of all overrides and inform the operator that automatic control has inhibited, and allow the operator to manually override automatic or centrally executed command.
11. Provide the capability to generate and modify the Controls Systems Application software-based sequences, database elements, associated operational definition information and user-required revisions to same at any designated Workstation together with the means to download same to the associated System Controllers.
12. In the event of loss of normal power, there shall be orderly shut down of the controllers to prevent the loss of database or software programming. When power is restored flash memory, battery backup or super capacitor will be automatically loaded into non-volatile flash memory and shall be incorporated for all programming data.

B. Auxiliary Control Units (ACUs) shall be stand-alone, multi-tasking, multi-user, real time digital processor complete with all hardware, software and communication interfaces, power supplies, and input/output modular devices.

1. ACUs shall either reside on the LonTalk FTT-10a network or provide data using LonMark standard network variable types and configuration properties.
2. All ACUs shall be provided with LED type annunciation to continually display its operational mode, power and communications.
3. Each ACU shall have sufficient memory to support its operating system, database including the following:
   a. Data sharing.
   b. Device and network management.
   c. Alarm and event management.
   d. Scheduling.

e. Energy Management.

4. Each ACU shall support firmware upgrades without the need to replace hardware and shall have a minimum of 15 percent spare capacity of I/O functions. The type of spares shall be in the same proportion as the implemented functions on the controller, but in no case there shall be less than one point of each implemented I/O type.
5. Each ACU shall continuously perform self-diagnostics, communication diagnosis, and provide both local and remote annunciation of any detected component failures, low battery condition; and upon failure shall assume the predetermined failure mode.
6. In the event of loss of normal power, there shall be orderly shut down of the controllers to prevent the loss of database or software programming. When power is restored flash memory, battery backup or super capacitor will be automatically loaded into non-volatile flash memory and shall be incorporated for all programming data.

C. Unitary Control Units (UCUs) shall be microprocessor-based. They shall be capable of stand-alone operation, continuing to provide stable control functions if communication is lost with the rest of the system.
1. Unitary Control Units shall either reside on the LonTalk FTT-10a network or provide data using LonMark standard network variable types and configuration properties.
2. Each UCU shall have sufficient memory to support its own operating system, including data sharing.
3. All UCUs shall be provided with LED type annunciation to continually display its operational mode, power and communications.
4. In the event of loss of normal power, there shall be orderly shut down of the controllers to prevent the loss of database or software programming. When power is restored flash memory, battery backup or super capacitor will be automatically loaded into non-volatile flash memory and shall be incorporated for all programming data.

D. Provide I/O module that connects sensors and actuators onto the field bus network for use by the direct digital controllers. I/O devices shall support the communication technology specified for each controller.
1. Analog input shall allow the monitoring of low voltage (0-10 VDC), current (4-20 ma), or resistance signals (thermistor, RTD). Analog input shall be compatible with, and field configurable to commonly

available sensing devices. Analog output shall provide a modulating signal for these control devices.

2. Binary inputs shall allow the monitoring of on/off signals from remote devices. Binary inputs shall provide a wetting current of at least 12 milliamps to be compatible with commonly available control devices. Binary outputs shall provide on/off operation, or a pulsed low voltage signal for pulse width modulation control. Outputs shall be selectable for either normally open or normally closed operation.
3. Binary outputs on remote and auxiliary controllers shall have 3-position (on/off/auto) override switches and status lights. Analog outputs on remote and auxiliary controllers shall have status lights and a 2-position (auto/manual) switch and manually adjustable potentiometer for manual override.
4. Each output point shall be provided with a light emitting diode (LED) to indicate status of outputs.

E. Communication Ports:

1. NACs controllers in the DDC systems shall be connected in a system local area network using protocol defined by ASHRAE Standard 135, BACnet protocol.
2. The control supplier shall provide connectors, repeaters, hubs, and routers necessary for inter-network communication.
3. Minimum baud rate between the peer-to-peer controllers in the system LAN shall be maintained at the rate of 10 Mbps. Minimum baud for the low level controllers between UCUs and ACUs, ACUs and NAC’s shall be maintained at the rate of 76 Kbps.
4. Provide RS-232 port with DB-9 or RJ-11 connector for communication with each controller that will allow direct connection of standard printers, operator terminals, modems, and portable laptop operator’s terminal. Controllers shall allow temporary use of portable devices without interrupting the normal operation of permanently connected modems, printers or terminals.
5. Database, such as points; status information, reports, system software, custom programs of any one controller shall be readable by any other controller on the network.

F. Diagnostic Devices (DD):

1. Provide a laptop computer capable of accessing all system data. This device may be connected to any point on the system network or may be

connected directly to any digital controller for programming, set-up, and troubleshooting.

2. Laptop computer shall be PC notebook style containing necessary software and hardware required. The PC shall contain as a minimum:
   a. 2.4 GHZ Intel Pentium Processor.
   b. 1024MB, 100 MHz RAM.
   c. 160GB Hard Drive.
   d. CD RW Drive.
   f. Ethernet IP network card.
   g. Operating system compatible with control software & PC Microsoft XP professional listed under Operator Workstation.

G. Electric Outlet: Provide a single phase, 120 VAC electrical receptacles inside or within 2 meters (6 feet) of the NAC and ACU enclosures for use with test equipment.

H. Spare Equipment:
   1. Provide spare digital controller (CU) boards and spare I/O boards as required. It shall be possible for trained hospital personnel to replace CU boards and load software via the Laptop computer or the ECC.
   2. Provide a minimum of one spare digital controller board of each type and associated parts including batteries to make at least one complete set of DDC control equipment spares.
   3. If I/O boards are separate from the CU boards, provide two spare I/O boards for each spare CU board provided above.

2.3 DIRECT DIGITAL CONTROLLER SOFTWARE

A. The software programs specified in this section shall be commercially available, concurrent, multi-tasking operating system and support the use of software application that operates under DOS or Microsoft Windows.

B. All points shall be identified by up to 30-character point name and 16-character point descriptor. The same names shall be used at the operator workstation.

C. All control functions shall execute within the stand-alone control units via DDC algorithms. The Owner shall be able to customize control strategies and sequences of operations defining the appropriate control loop algorithms and choosing the optimum loop parameters.

D. All CU’s shall be capable of being programmed to utilize stored default values for assured fail-safe operation of critical processes. Default

values shall be invoked upon sensor failure or, if the primary value is normally provided by the central or another CU, or by loss of bus communication. Individual application software packages shall be structured to assume a fail-safe condition upon loss of input sensors. Loss of an input sensor shall result in output of a sensor-failed message at the ECC workstation. Each ACU and RCU shall have capability for local readouts of all functions. The UCUs shall be read remotely.

E. All DDC control loops shall be able to utilize any of the following control modes:
   1. Two position (on-off, slow-fast) control.
   2. Proportional control.
   3. Proportional plus integral (PI) control.
   4. Proportional plus integral plus derivative (PID) control. All PID programs shall automatically invoke integral wind up prevention routines whenever the controlled unit is off, under manual control of an automation system or time initiated program.
   5. Automatic tuning of control loops.

F. System Security: Operator access shall be secured using individual password and operator’s name. Passwords shall restrict the operator to the level of object, applications, and system functions assigned to him. A minimum of six (6) levels of security for operator access shall be provided.

G. Application Software, as necessary: The CUs shall provide the following programs as a minimum for the purpose of optimizing energy consumption while maintaining comfortable environment for occupants. All application software shall reside and run in the system digital controllers. Editing of the application shall occur at the operator workstation or via a portable workstation, when it is necessary, to access directly the programmable unit.
   1. Power Demand Limiting (PDL): Power demand limiting program shall monitor the building power consumption and limit the consumption of electricity to prevent peak demand charges. PDL shall continuously track the electricity consumption from a pulse input generated at the kilowatt-hour/demand electric meter. PDL shall sample the meter data to continuously forecast the electric demand likely to be used during successive time intervals. If the forecast demand indicates that electricity usage will likely to exceed a user preset maximum allowable level, then PDL shall automatically shed electrical loads.

Once the demand load has met, loads that have been shed shall be restored and returned to normal mode. Control system shall be capable of demand limiting by resetting the HVAC system set points to reduce load while maintaining indoor air quality.

2. Optimum Start/Stop (OSS): Optimum start/stop program shall automatically be coordinated with event scheduling. The OSS program shall start HVAC equipment at the latest possible time that will allow the equipment to achieve the desired zone condition by the time of occupancy, and it shall also shut down HVAC equipment at the earliest possible time before the end of the occupancy period and still maintain desired comfort conditions. The OSS program shall consider both outside weather conditions and inside zone conditions. The program shall automatically assign longer lead times for weekend and holiday shutdowns. The program shall poll all zones served by the associated AHU and shall select the warmest and coolest zones. These shall be used in the start time calculation. It shall be possible to assign occupancy start times on a per air handler unit basis. The program shall meet the local code requirements for minimum outdoor air while the building is occupied. Modification of assigned occupancy start/stop times shall be possible via operator's workstation.
3. Event Scheduling: Provide a comprehensive menu driven program to automatically start and stop designated points or a group of points according to a stored time. This program shall provide the capability to individually command a point or group of points. When points are assigned to one common load group it shall be possible to assign variable time advances/delays between each successive start or stop within that group. Scheduling shall be calendar based and advance schedules may be defined up to one year in advance. Advance schedule shall override the day-to-day schedule. The operator shall be able to define the following information:
   a. Time, day.
   b. Commands such as on, off, auto.
   c. Time delays between successive commands.
   d. Manual overriding of each schedule.
   e. Allow operator intervention.
4. Alarm Reporting: The operator shall be able to determine the action to be taken in the event of an alarm. Alarms shall be routed to the

appropriate workstations based on time and events. An alarm shall be able to start programs, login the event, print and display the messages. The system shall allow the operator to prioritize the alarms to minimize nuisance reporting and to speed operator's response to critical alarms. A minimum of six (6) priority levels of alarms shall be provided for each point.

5. Remote Communications: The system shall have the ability to dial out in the event of an alarm to workstations and alpha-numeric pagers. The alarm message shall include the name of the calling location, the device that generated the alarm, and the alarm message itself. The operator shall be able to remotely access and operate the system using dial up communications. Remote access shall allow the operator to function the same as local access.
6. Maintenance Management (PM): The program shall monitor equipment status and generate maintenance messages based upon the operators defined equipment run time, starts, and/or calendar date limits. A preventative maintenance alarm shall be printed indicating maintenance requirements based on pre-defined run time. Each preventive message shall include point description, limit criteria and preventative maintenance instruction assigned to that limit. A minimum of 480-character PM shall be provided for each component of units such as air handling units.

2.4 SENSORS (AIR, WATER AND STEAM)

A. Temperature and Humidity Sensors:

1. Electronic Sensors: Provide all remote sensors as required for the systems. All sensors shall be vibration and corrosion resistant for wall, immersion, and/or duct mounting.
   a. Temperature Sensors: Thermistor type for terminal units and Resistance Temperature Device (RTD) with an integral transmitter type for all other sensors.
      1) Duct sensors shall be rigid or averaging type as shown on drawings. Averaging sensor shall be a minimum of 1 linear ft of sensing element for each sq ft of cooling coil face area.
      2) Immersion sensors shall be provided with a separable well made of stainless steel, bronze or monel material. Pressure rating of well is to be consistent with the system pressure in which it is to be installed.

3) Space sensors shall be equipped with set-point adjustment, override switch, display, and/or communication port as shown on the drawings. Match room thermostats, locking cover.
4) Outdoor air temperature sensors shall have watertight inlet fittings and be shielded from direct sunlight.
5) Room security sensors shall have stainless steel cover plate with insulated back and security screws.
6) Wire: Twisted, shielded-pair cable.
7) Output Signal: 4-20 ma.

b. Humidity Sensors: Bulk polymer sensing element type.
1) Duct and room sensors shall have a sensing range of 20 to 80 percent with accuracy of ± 2 to ± 5 percent RH, including hysteresis, linearity, and repeatability.
2) Outdoor humidity sensors shall be furnished with element guard and mounting plate and have a sensing range of 0 to 100 percent RH.
3) 4-20 ma continuous output signal.

c. Static Pressure Sensors: Non-directional, temperature compensated.
1) 4-20 ma output signal.
2) 0 to 5 inches wg for duct static pressure range.
3) 0 to 0.25 inch wg for Building static pressure range.

2. Pneumatic sensors: Shall be vibration and corrosion resistant.
a. Room temperature sensors shall be linear-output type, 45 to 85 degrees F range, with bimetal sensing element, blank locking covers matching room thermostats.
b. Duct-mounted sensors shall be rigid, corrosion resistant construction and/or averaging sensor type. Averaging sensor shall be of single or multiple-unit capillary elements, 3-15 psig linear output signal and temperature range as shown on drawings.
c. Humidity Sensor: one-pipe, direct acting, with minimum sensing span of 15-85% relative humidity for 3-15 psig output signal, corrosion resistant, temperature compensated. Space mounted sensor shall match thermostats covers.
d. Differential Air Pressure Transmitter: One pipe direct acting, diaphragm type, temperature compensated; accuracy within 5 percent of full scale, and 3-15 psig output signal.

B. Water flow sensors:

1. Sensor shall be insertion turbine type with turbine element, retractor and preamplifier/transmitter mounted on a two-inch full port isolation valve; assembly easily removed or installed as a single unit under line pressure through the isolation valve without interference with process flow; calibrated scale shall allow precise positioning of the flow element to the required insertion depth within plus or minute 1 mm (0.05 inch); wetted parts shall be constructed of stainless steel. Operating power shall be nominal 24 VDC. Local instantaneous flow indicator shall be LED type in NEMA 4 enclosure with 3-1/2 digit display, for wall or panel mounting.
2. Performance characteristics:
   a. Ambient conditions: -40 to 60 degrees C (-40 to 140 degrees F), 5 to 100 percent humidity.
   b. Operating conditions: 850 kPa (125 psig), 0 to 120 degrees C (30 to 250 degrees F), 0.15 to 12 m per second (0.5 to 40 feet per second) velocity.
   c. Nominal range (turn down ratio): 10 to 1.
   d. Overall accuracy plus or minus one percent of reading.
   e. Repeatability: plus or minus 0.25 percent of reading.
   f. Preamplifier mounted on meter shall provide 4-20 ma divided pulse output or switch closure signal for units of volume or mass per a time base. Signal transmission distance shall be a minimum of 1,800 meters (6,000 feet).
   g. Pressure Loss: Maximum 1 percent of the line pressure in line sizes above 100 mm (4 inches).
   h. Ambient temperature effects, less than 0.005 percent calibrated span per degree C (degree F) temperature change.
   i) RFI effect - flow meter shall not be affected by RFI.
   j) Power supply effect less than 0.02 percent of span for a variation of plus or minus 10 percent power supply.

C. Flow switches:
1. Shall be either paddle or differential pressure type.
   a. Paddle-type switches (liquid service only) shall be UL Listed, SPDT snap-acting, adjustable sensitivity with NEMA 4 enclosure.
   b. Differential pressure type switches (air or water service) shall be UL listed, SPDT snap acting, NEMA 4 enclosure, with scale range and differential suitable for specified application.

D. Current Switches: Current operated switches shall be self powered, solid state with adjustable trip current as well as status, power, and relay command status LED indication. The switches shall be selected to match the current of the application and output requirements of the DDC systems.

2.5 CONTROL CABLES

As specified in Division 26.

2.6 THERMOSTATS AND HUMIDISTATS

A. Room thermostats controlling heating and cooling devices shall have three modes of operation (heating - null or dead band - cooling). Thermostats for patient bedrooms shall have capability of being adjusted to eliminate null or dead band. Wall mounted thermostats shall have manufacturer's recommendation finish, setpoint range and temperature display and external adjustment:

1. Pneumatic thermostats shall be 2-pipe, non-bleed or relay type design fully proportional with adjustable throttling range, direct or reverse acting as required. Factory calibrated at 17.2 kPa per degree C (2.5 psig per degree F) setpoint dial stops, adjustable sensitivity setting of 7 to 30 kPa per degree C (1 to 4 psig per degree F), and a test port to measure the output to controlled devices. Range as required.
2. Electronic Thermostats: Solid-state, microprocessor based, programmable to daily, weekend, and holiday schedules.
   a. Public Space Thermostat: Public space thermostat shall be a platinum sensor and shall not have a visible means of set point adjustment. Adjustment shall be via the digital controller to which it is connected.
   b. Patient Room Thermostats: Platinum sensor with set point adjustment and an indicator.
   c. Psychiatric Patient Room Sensors: Electronic duct sensor as noted under Article 2.4.
   d. Battery replacement without program loss.

B. Strap-on thermostats shall be enclosed in a dirt-and-moisture proof housing with fixed temperature switching point and single pole, double throw switch.

C. Freezestats shall have a minimum of 300 mm (one linear foot) of sensing element for each 0.093 square meter (one square foot) of coil area. A freezing condition at any increment of 300 mm (one foot) anywhere along

the sensing element shall be sufficient to operate the thermostatic element.

D. Room Humidistats: Provide fully proportioning humidistat with adjustable throttling range for accuracy of settings and conservation. The humidistat shall have set point scales shown in percent of relative humidity located on the instrument. Systems showing moist/dry or high/low are not acceptable.

2.7 SPECIAL CONTROLLERS

A. Laboratory rooms and fume hoods in those rooms shall be controlled to allow for a variable flow of conditioned air into the room, general exhaust from the room, and exhaust through the fume hood while maintaining a safe face velocity at the hood sash opening and proper space pressurization.

B. Fume Hood Exhaust Air Controller: The air flow through the open face of the hood, regardless of sash position, shall be controlled at a face velocity between 30 to 36 meter per minute (100 fpm and 120 fpm). A velocity sensor controller located in a sampling tube in the side wall of the hood shall control a damper in the hood discharge to maintain the face velocity.

C. Room Differential Pressure Controller: The differential pressure in laboratory rooms, operating rooms and isolation rooms shall be maintained by controlling the quantity of air exhausted from or supplied to the room. A sensor-controller shall measure and control the velocity of air flowing into or out of the room through a sampling tube installed in the wall separating the room from the adjacent space, and display the value on its monitor. The sensor controller shall meet the following as a minimum:

1. Operating range: -0.200000 to +0.20000 inches of water
2. Resolution: 5 percent of reading
3. Accuracy: +/- 10 percent of reading +/- 0.00001 inches of water
4. Analog output: 0-10 VDC or 4-20 ma
5. Operating temperature range: 32-120 degrees F

2.8 FINAL CONTROL ELEMENTS AND OPERATORS

A. Fail Safe Operation: Control valves and dampers shall provide "fail safe" operation in the normally open for critical area exhaust, and normally closed position for supply side when applicable, as required for moisture, pressurization, and smoke or fire protection.

B. Spring Ranges: Range as required for system sequencing and to provide tight shut-off.

C. Power Operated Control Dampers (other than VAV Boxes): Factory fabricated, balanced type dampers. All modulating dampers shall be opposed blade type and gasketed. Blades for two-position, duct-mounted dampers shall be parallel, airfoil (streamlined) type for minimum noise generation and pressure drop.

   1. Leakage: Maximum leakage in closed position shall not exceed 7 L/S (15 CFMs) differential pressure for outside air and exhaust dampers and 200 L/S/ square meter (40 CFM/sq. ft.) at 50 mm (2 inches) differential pressure for other dampers.
   2. Frame shall be galvanized steel channel with seals as required to meet leakage criteria.
   3. Blades shall be galvanized steel or aluminum, 200 mm (8 inch) maximum width, with edges sealed as required.
   4. Bearing shall be nylon, bronze sleeve or ball type.
   5. Hardware shall be zinc-plated steel. Connected rods and linkage shall be non-slip. Working parts of joints shall be brass, bronze, nylon or stainless steel.

D. Operators shall be electric or pneumatic type operating at 140 kPa (20 psig) as required for proper operation.

   1. See drawings for required control operation.
   2. Metal parts shall be aluminum, mill finish galvanized steel, or zinc plated steel or stainless steel.
   3. Maximum air velocity and pressure drop through free area the dampers:
      a. Smoke damper in air handling unit; 210 meter per minute (700 fpm).
      b. Duct mounted damper; 600 meter per minute (2000 fpm).
      c. Maximum static pressure loss, 50 Pascal (0.20 inches water gage).

E. Smoke Dampers and Combination Fire/Smoke Dampers: Dampers and operators are specified in Section 23 31 00, HVAC DUCTS AND CASINGS. Control of these dampers is specified under this Section.

F. Control Valves:

   1. Valves shall be rated for a minimum of 150 percent of system operating pressure at the valve location but not less than 900 kPa (125 psig).

2. Valves 50 mm (2 inches) and smaller shall be bronze body with threaded or flare connections.
3. Valves 60 mm (2 1/2 inches) and larger shall be bronze or iron body with flanged connections.
4. Brass or bronze seats except for valves controlling media above 100 degrees C (210 degrees F), which shall have stainless steel seats.
5. Flow characteristics:
   a. Three way valves shall have a linear relation or equal percentage relation of flow versus value position.
   b. Two-way valves position versus flow relation shall be linear for steam and equal percentage for water flow control.
6. Maximum pressure drop:
   a. Two position steam control: 20 percent of inlet gauge pressure.
   b. Modulating Steam Control: 80 percent of inlet gauge pressure (acoustic velocity limitation).
   c. Modulating water flow control, greater of 3 meters (10 feet) of water or the pressure drop through the apparatus.
   d. Two position water valves shall be line size.

G. Damper and Valve Operators and Relays:
1. Pneumatic operators, spring return type with non-ferrous metal bellows or diaphragm of neoprene or other elastomer. Bellows or diaphragm shall be of sufficient size so that a change in operating pressure of not more than two (2) percent of the total motor operating pressure range will be required to start the valve or damper moving. Provide positive positioning or sequencing relays with adjustable operating range and starting point for operators sequenced with other operators to permit adjustment of control sequences, except for control valves in confined spaces in terminal units, which may use springs with range selected to provide necessary sequencing.
2. Electric damper operator shall provide full modulating control of dampers. A linkage and pushrod shall be furnished for mounting the actuator on the damper frame internally in the duct or externally in the duct or externally on the duct wall, or shall be furnished with a direct-coupled design.
3. Electronic damper operators: VAV Box actuator shall be mounted on the damper axle or shall be of the air valve design, and shall provide complete modulating control of the damper. The motor shall

have a closure torque of 35-inch pounds minimum with full torque applied at close off to attain minimum leakage.

2.9 AIR FLOW CONTROL

A. Airflow and static pressure shall be controlled via digital controller (CUs) with inputs from airflow control measuring stations and static pressure inputs as specified. Controller outputs shall be true analog output signals to variable frequency drives. Pulse width modulation outputs are not acceptable. The CUs shall include the capability to control via simple proportional (P) control, proportional plus integral (PI), proportional plus integral plus derivative (PID), and on-off. The airflow control programs shall be factory-tested programs that are documented in the literature of the control manufacturer.

B. Air Flow Measuring Station -- Pneumatic Type:

1. Airflow measuring stations shall measure airflow by the pitot tube traverse method. Each unit shall consist of a network of static and total pressure sensors, factory positioned and connected in parallel, to produce an equalized velocity pressure. The measured velocity pressure converted to airflow (cfm) shall have accuracy within 2 percent of the full scale throughout the velocity range from 200 to 1,200 meter per minute (700 to 4,000 fpm).
2. Airflow measuring stations shall consist of 16-gauge sheet metal casing, an aluminum air velocity treatment and air straightening section with an open face area not less than 97 percent and a total and static pressure sensing manifold made of copper. Each station shall contain noncombustible sensors which shall be incapable of producing toxic gases or fumes in the event of elevated duct temperatures. All interconnecting tubing shall be internal to the unit with the exception of one total pressure and one static pressure meter connection.
3. Each air flow measuring station shall be installed to meet at least the manufacturer’s minimum installation conditions and shall not amplify the sound level within the duct. The maximum resistance to airflow shall not exceed 0.3 times the velocity head for the duct stations and 0.6 times the velocity head for the fan stations. The unit shall be suitable for continuous operation up to a temperature of 120 degrees C (250 degrees F).
4. Differential pressure transducers shall measure and transmit pressure signals to the direct digital controller CU.

3. Electronics Panel:
   a. Electronics Panel shall consist of a surface mounted enclosure complete with solid-state microprocessor and software.
   b. Electronics Panel shall be A/C powered 24 VAC, or as specified, and shall have the capability to transmit signals of 0-5 VDC, 0-10 VCD or 4-20 ma for use in control of the HVAC Systems. The electronic panel shall have the capability to accept user defined scaling parameters for all output signals.
   c. Electronics Panel shall have the capability to digitally display airflow in CFM and temperatures in degrees F. The displays shall be provided as an integral part of the electronics panel. The electronic panel shall have the capability to totalize the output flow in CFM for two or more systems, as required. A single output signal may be provided which will equal the sum of the systems totalized. Output signals shall be provided for temperature and airflow. Provide remote mounted air flow or temperature displays where indicated on the plans.
   d. Electronics Panel shall have the following:
      1) Minimum of 12-bit A/D conversion.
      2) Field adjustable digital primary output offset and gain.
      3) Airflow analog output scaling of 100 to 10,000 FPM.
      4) Temperature analog output scaling from -45 to 70 degrees C (-50 to 160 degrees F).
      5) Analog output resolution (full scale output) of 0.025%.
   e. All readings shall be in I.P. units.
4. Thermal flow sensors and its electronics shall be installed as per manufacturer’s instructions. The probe sensor density shall be as follows:

Probe Sensor Density	
Area (sq.ft.)	**Qty. Sensors**
<=1	2
>1 to <4	4
4 to <8	6
8 to <12	8
12 to <16	12
>=16	16

a. Complete installation shall not exhibit more than ± 2.0% error in airflow measurement output for variations in the angle of flow of up to 10 percent in any direction from its calibrated orientation. Repeatability of readings shall be within ± 0.25%.

C. Static Pressure Measuring Station:

1. Static Pressure Control:

a. Systems shall consist of one or more static pressure sensors and transmitters along with relays or auxiliary devices as required for a complete functional system. The span of the transmitter shall not exceed two times the design static pressure at the point of measurement. The output of the transmitter shall be true representation of the input pressure with plus or minus 25 Pascal (0.1 inch) W.G. of the true input pressure.

1) Static pressure sensors shall have the same requirements as Airflow Measuring Devices except that total pressure sensors are optional, and only multiple static pressure sensors positioned on an equal area basis connected to a network of headers are required.

2) For systems with multiple major trunk supply ducts, furnish a static pressure transmitter for each trunk duct. The transmitter signal representing the lowest static pressure shall be selected and this shall be the input signal to the CU.

3) The CU shall receive the static pressure transmitter signal and CU shall provide a control output signal to the supply fan capacity control device. The control mode shall be proportional plus integral (PI) (automatic reset) and where required shall also include derivative mode.

4) In systems with multiple static pressure transmitters, provide a switch located near the fan discharge to prevent excessive pressure during abnormal operating conditions.

D. Constant Volume Control:

1. Systems shall consist of an air flow measuring station along with such relays and auxiliary devices as required to produce a complete functional system. The transmitter shall receive its air flow signal and static pressure signal from the flow measuring station and shall have a span not exceeding three times the design flow rate. The CU

shall receive the transmitter signal and shall provide an output to the fan volume control device to maintain a constant flow rate. The CU shall provide proportional plus integral (PI) (automatic reset) control mode and where required also inverse derivative mode. Overall system accuracy shall be plus or minus the equivalent of 2 Pascal (0.008 inch) velocity pressure as measured by the flow station.

E. Airflow Synchronization:

1. Systems shall consist of an air flow measuring station for each supply and return duct, the CU and such relays, as required to provide a complete functional system that will maintain a constant flow rate difference between supply and return air to an accuracy of ±10%. In systems where there is no suitable location for a flow measuring station that will sense total supply or return flow, provide multiple flow stations with a differential pressure transmitter for each station. Signals from the multiple transmitters shall be added through the CU such that the resultant signal is a true representation of total flow.
2. The total flow signals from supply and return air shall be the input signals to the CU. This CU shall track the return air fan capacity in proportion to the supply air flow under all conditions.

PART 3 - EXECUTION

3.1 INSTALLATION

A. General:

1. Examine project plans for control devices and equipment locations; and report any discrepancies, conflicts, or omissions to Resident Engineer for resolution before proceeding for installation.
2. Work Coordination: Section 01 00 00, GENERAL CONDITIONS.
3. Install equipment, piping, wiring /conduit parallel to or at right angles to building lines.
4. Install all equipment and piping in readily accessible locations. Do not run tubing and conduit concealed under insulation or inside ducts.
5. Mount control devices, tubing and conduit located on ducts and apparatus with external insulation on standoff support to avoid interference with insulation.
6. Provide sufficient slack and flexible connections to allow for vibration of piping and equipment.

7. Run tubing and wire connecting devices on or in control cabinets parallel with the sides of the cabinet neatly racked to permit tracing.
8. Install equipment level and plum.

B. Piping Installation:
1. All piping associated with smoke control shall be hard drawn copper.
2. Tubing passing through or buried in concrete shall be installed in rigid steel conduit of sufficient strength to prevent damage to tubing.
3. Except for short apparatus connections, non-metallic tubing in all exposed locations, including mechanical rooms shall be protected from damage by installing the tubing in electric conduit or raceways. Provide protective grommet where tubing exits conduit.
4. Non-metallic tubing exposed to outdoors shall be protected by a sleeve or larger tubing.
5. In concealed but accessible locations such as above lay-in ceilings, non-metallic tubing may be run without conduit or raceway.
6. All tubing which is not run-in conduit or raceway, both metallic and non-metallic, shall be neatly routed and securely fastened to building structure at not more than 36-IN. intervals.
7. Welding shall be performed in accordance with Section 23 21 13, HYDRONIC PIPING and Section 23 22 13, STEAM AND CONDENSATE HEATING PIPING.
8. Label and identify control air piping in accordance with specification Section 23 05 11, COMMON WORK RESULTS FOR HVAC AND STEAM GENERATION.

C. Electrical Wiring Installation:
1. Install conduits and wiring in accordance with Specification Section 26 05 33, RACEWAY AND BOXES FOR ELECTRICAL SYSTEMS.
2. Install signal and communication cables in accordance with Specification Section 26 05 21, LOW-VOLTAGE ELECTRICAL POWER CONDUCTORS AND CABLES (600 VOLTS AND BELOW).
3. Install conduit and wiring between operator workstation(s), digital controllers, electrical panels, indicating devices, instrumentation, miscellaneous alarm points, thermostats, and relays as shown on the drawings or as required under this section. All wiring shall be installed in conduits.

4. Install all electrical work required for a fully functional system and not shown on electrical plans or required by electrical specifications. Where low voltage power is required, provide suitable transformers.
5. Install all system components in accordance with local Building Code and National Electric Code.
   a. Splices: Splices in shielded and coaxial cables shall consist of terminations and the use of shielded cable couplers. Terminations shall be in accessible locations. Cables shall be harnessed with cable ties.
   b. Equipment: Fit all equipment contained in cabinets or panels with service loops, each loop being at least 300 mm (12 inches) long. Equipment for fiber optics system shall be rack mounted, as applicable, in ventilated, self-supporting, code gauge steel enclosure. Cables shall be supported for minimum sag.
   c. Cable Runs: Keep cable runs as short as possible. Allow extra length for connecting to the terminal board. Do not bend flexible coaxial cables in a radius less than ten times the cable outside diameter.
   d. Use vinyl tape, sleeves, or grommets to protect cables from vibration at points where they pass around sharp corners, through walls, panel cabinets, etc.
6. Conceal cables, except in mechanical rooms and areas where other conduits and piping are exposed.
7. Permanently label or code each point of all field terminal strips to show the instrument or item served. Color-coded cable with cable diagrams may be used to accomplish cable identification.
8. Grounding: ground electrical systems per manufacturer’s written requirements for proper and safe operation.

D. Install Sensors and Controls:
   1. Temperature Sensors:
      a. Install all sensors and instrumentation according to manufacturer’s written instructions. Temperature sensor locations shall be readily accessible, permitting quick replacement and servicing of them without special skills and tools.
      b. Calibrate sensors to accuracy specified, if not factory calibrated.

c. Use of sensors shall be limited to its duty, e.g., duct sensor shall not be used in lieu of room sensor.
d. Install room sensors permanently supported on wall frame. They shall be mounted at 1.5 meter (5.0 feet) above the finished floor.
e. Mount sensors rigidly and adequately for the environment within which the sensor operates.
f. Sensors used in mixing plenum, and hot and cold decks shall be of the averaging of type. Averaging sensors shall be installed in a serpentine manner horizontally across duct. Each bend shall be supported with a capillary clip.
g. All pipe mounted temperature sensors shall be installed in wells.
h. All wires attached to sensors shall be air sealed in their conduits or in the wall to stop air transmitted from other areas affecting sensor reading.
i. Permanently mark terminal blocks for identification. Protect all circuits to avoid interruption of service due to short-circuiting or other conditions. Line-protect all wiring that comes from external sources to the site from lightning and static electricity.

2. Pressure Sensors:
   a. Install duct static pressure sensor tips facing directly downstream of airflow.
   b. Install high-pressure side of the differential switch between the pump discharge and the check valve.
   c. Install snubbers and isolation valves on steam pressure sensing devices.
3. Actuators:
   a. Mount and link damper and valve actuators according to manufacturer’s written instructions.
   b. Check operation of damper/actuator combination to confirm that actuator modulates damper smoothly throughout stroke to both open and closed position.
   c. Check operation of valve/actuator combination to confirm that actuator modulates valve smoothly in both open and closed position.
4. Flow Switches:

a. Install flow switch according to manufacturer's written instructions.
b. Mount flow switch a minimum of 5 pipe diameters up stream and 5 pipe diameters downstream or 600 mm (2 feet) whichever is greater, from fittings and other obstructions.
c. Assure correct flow direction and alignment.
d. Mount in horizontal piping-flow switch on top of the pipe.

E. Installation of Network:
1. Ethernet:
a. The network shall employ Ethernet LAN architecture, as defined by IEEE 802.3. The Network Interface shall be fully Internet Protocol (IP) compliant allowing connection to currently installed IEEE 802.3, Compliant Ethernet Networks.
b. The network shall directly support connectivity to a variety of cabling types. As a minimum provide the following connectivity: 10 Base 2 (ThinNet RG-58 A/U Coaxial cabling with BNC connectors), 10 Base T (Twisted-Pair RJ-45 terminated UTP cabling).
2. Echelon:
a. The ECC shall employ LonTalk communications FTT-10.
b. Echelon LAN (Flat LON): The ECC shall employ a LON LAN that will connect through an Echelon Communication card directly to all controllers on the FTT-10 LAN.
3. Third Party Interfaces: Contractor shall integrate real-time data from building systems by other trades and databases originating from other manufacturers as specified and required to make the system work as one system.

F. Installation of Digital Controllers and Programming:
1. Provide a separate digital control panel for each major piece of equipment, such as air handling unit, chiller, pumping unit etc. Points used for control loop reset such as outdoor air, outdoor humidity, or space temperature could be located on any of the remote control units.
2. Provide sufficient internal memory for the specified control sequences and trend logging. There shall be a minimum of 25 percent of available memory free for future use.
3. System point names shall be modular in design, permitting easy operator interface without the use of a written point index.

4. Provide software programming for the applications intended for the systems specified, and adhere to the strategy algorithms provided.
5. Provide graphics for each piece of equipment and floor plan in the building. This includes each chiller, cooling tower, air handling unit, fan, terminal unit, boiler, pumping unit etc. These graphics shall show all points dynamically as specified in the point list.

3.2 SYSTEM VALIDATION AND DEMONSTRATION

A. As part of final system acceptance, a System Demonstration is required (see below). Prior to start of this Demonstration, the contractor is to perform a complete Validation of all aspects of the Controls and Instrumentation System.

B. Validation

1. Prepare and submit for approval a Validation Test Plan including Test Procedures for the performance verification tests. Test Plan shall address all specified functions of the Engineering Control Center and all specified sequences of operation. Explain in detail actions and expected results used to demonstrate compliance with the requirements of this specification. Explain the method for simulating the necessary conditions of operation used to demonstrate performance of the system. Test Plan shall include a Test Check List to be used by the Installer’s agent to check and initial that each test has been successfully completed. Deliver Test Plan documentation for the performance verification tests to the owner’s representative 30 days prior to start of performance verification tests. Provide draft copy of operation and maintenance manual with performance verification test.
2. After approval of the Validation Test Plan, Installer shall carry out all tests and procedures therein. Installer shall completely check out, calibrate, and test all connected hardware and software to insure that system performs in accordance with approved specifications and sequences of operation submitted. Installer shall complete and submit Test Check List.

C. DEMONSTRATION

1. System operation and calibration to be demonstrated by the Installer in the presence of the Architect or Owner's representative on random samples of equipment as dictated by the Owner’s representative. Should random sampling indicate improper commissioning, the owner

reserves the right to subsequently witness complete calibration of the system at no addition cost to the owner.

2. Demonstrate to authorities that all required safeties and life safety functions are fully functional and complete.
3. Make accessible, personnel to provide necessary adjustments and corrections to systems as directed by balancing agency.
4. The following witnessed demonstrations of field control equipment shall be included:
   a. Pressure test control air piping at 1.25 times the design pressure. Pressure shall be applied in several stages, allowing time for the system to reach equilibrium. The test pressure shall not exceed the pneumatic test pressure for any pump, valve, or other component in the system under test. Pressure shall not drop more than 5% within 4 hours.
   b. Observe HVAC systems in shut down condition. Check dampers and valves for normal position.
   c. Test application software for its ability to communicate with digital controllers, operator workstation, and uploading and downloading of control programs.
   d. Demonstrate the software ability to edit the control program off-line.
   e. Demonstrate reporting of alarm conditions for each alarm and ensure that these alarms are received at the assigned location, including operator workstations.
   f. Demonstrate ability of software program to function for the intended applications-trend reports, change in status etc.
   g. Demonstrate via graphed trends to show the sequence of operation is executed in correct manner, and that the HVAC systems operate properly through the complete sequence of operation, e.g., seasonal change, occupied/unoccupied mode, and warm-up condition.
   h. Demonstrate hardware interlocks and safeties functions, and that the control systems perform the correct sequence of operation after power loss and resumption of power loss.
   i. Prepare and deliver to the Owner graphed trends of all control loops to demonstrate that each control loop is stable and the set points are maintained.
   j. Demonstrate that each control loop responds to set point adjustment and stabilizes within one (1) minute. Control loop

trend data shall be instantaneous and the time between data points shall not be greater than one (1) minute.

5. Witnessed validation demonstration of Operator's Terminal functions shall consist of:
   a. Running each specified report.
   b. Display and demonstrate each data entry to show site specific customizing capability. Demonstrate parameter changes.
   c. Step through penetration tree, display all graphics, demonstrate dynamic update, and direct access to graphics.
   d. Execute digital and analog commands in graphic mode.
   e. Demonstrate DDC loop precision and stability via trend logs of inputs and outputs.
   f. Demonstrate EMS performance via trend logs and command trace.
   g. Demonstrate scan, update, and alarm responsiveness.
   h. Demonstrate spreadsheet/curve plot software, and its integration with database.
   i. Demonstrate on-line user guide, and help function and mail facility.
   j. Demonstrate digital system configuration graphics with interactive upline and downline load, and demonstrate specified diagnostics.
   k. Demonstrate multitasking by showing dynamic curve plot, and graphic construction operating simultaneously via split screen.
   l. Demonstrate class programming with point options of beep duration, beep rate, alarm archiving, and color banding.

----- END -----

SECTION 23 21 13
HYDRONIC PIPING

PART 1 - GENERAL

1.1 DESCRIPTION

A. Water piping to connect HVAC equipment, including the following:

1. Chilled water, condenser water, heating hot water and drain piping.
2. Extension of domestic water make-up piping.
3. Glycol-water piping.
4. Factory prefabricated (pre-insulated) chilled water piping for underground service. Steel or copper piping with field applied closed cell cellular glass insulation, Section 23 07 11, HVAC, PLUMBING, AND BOILER PLANT INSULATION may be furnished for underground piping in lieu of factory prefabricated (pre-insulated) piping.
5. Factory prefabricated (pre-insulated) chilled water piping, with metal carrier pipe and metal jacket, may be provided in utility tunnels, pipe basements and crawl spaces, in lieu of field insulated piping.

1.2 RELATED WORK

A. Section 01 00 00, GENERAL REQUIREMENTS.

B. Section 01 33 23, SHOP DRAWINGS, PRODUCT DATA, AND SAMPLES.

C. Section 03 30 00, CAST-IN-PLACE CONCRETE.

D. Section 13 05 41, SEISMIC RESTRAINT REQUIREMENTS FOR NON-STRUCTURAL COMPONENTS: Seismic restraints for piping.

E. Section 23 05 11, COMMON WORK RESULTS FOR HVAC AND STEAM GENERATION: General mechanical requirements and items, which are common to more than one section of Division 23.

F. Section 23 21 23, HYDRONIC PUMPS: Pumps.

G. Section 23 07 11, HVAC, PLUMBING, AND BOILER PLANT INSULATION: Piping insulation.

H. Section 23 23 00, REFRIGERANT PIPING: Refrigerant piping and refrigerants.

I. Section 23 25 00, HVAC WATER TREATMENT: Water treatment for open and closed systems.

J. Section 23 09 23, DIRECT-DIGITAL CONTROL SYSTEM FOR HVAC: Temperature and pressure sensors and valve operators.

K. Examine all drawings and criteria sheets and all other Sections of the Specifications for requirements, which affect work under this Section whether or not such work is specifically mentioned in this Section.

1.3 QUALITY ASSURANCE

A. Section 23 05 11, COMMON WORK RESULTS FOR HVAC AND STEAM GENERATION, which includes welding qualifications.

B. Design Working Pressure for Pre-insulated Chilled Water Piping: 861 kPa (125 psig).

C. Submit prior to welding of steel piping a certificate of Welder’s certification. The certificate shall be current and not more than one year old.

D. Manufacturers Training Service: The Contractor shall obtain the services of an independent trained representative of the pre-insulated chilled water pipe system manufacturer to instruct contractor's work force in installation procedures for all pre-insulated, prefabricated systems.

E. On Site Supervision of Underground Pre-insulated Chilled Water Piping Installation:

1. Provide services of a factory trained representative of the pipe manufacturer for a minimum of three days, to include pre installation, installation and testing periods.

2. Representative's daily written reports to the Resident Engineer: Present the original of each report on the day it is prepared and forward a copy to the manufacturer's main office. The report shall be signed by the manufacturer's representative. The report shall state whether or not the condition and quality of the materials used and the installation of the system is in accordance with the plans, specifications, and published standards of the manufacturer, and is satisfactory in all respects. If anything connected with the installation is unsatisfactory, the report shall state that corrective action has been taken or shall contain the manufacturer's recommendations for corrective action. The report shall cover any condition that could result in an unsatisfactory installation. The representative shall take prompt action to return to the factory all damaged and defective material, and shall order prompt replacement of such material.

1.4 SUBMITTALS

A. Submit in accordance with Section 01 33 23, SHOP DRAWINGS, PRODUCT DATA, AND SAMPLES.

B. Manufacturer's Literature and Data:

1. Pipe and equipment supports. Submit calculations for seismic restraints, variable spring hangers and constant support hangers.

2. Pipe and tubing, with specification, class or type, and schedule.
3. Pipe fittings, including miscellaneous adapters and special fittings.
4. Flanges, gaskets and bolting.
5. Valves of all types.
6. Strainers.
7. Flexible connectors for water service.
8. Pipe alignment guides.
9. Expansion joints.
10. Expansion compensators.
11. All specified hydronic system components.
12. Water flow measuring devices.
13. Gages.
14. Thermometers and test wells.
15. Electric heat tracing systems.
16. Seismic bracing details for piping.
17. Factory pre-insulated piping components and installation instructions.
18. Pipe fittings, and mechanical couplings, if used, for pre-insulated chilled water piping.
19. Anchors and thrust blocking for pre-insulated chilled water piping.

C. Manufacturer's certified data report, Form No. U-1, for ASME pressure vessels:
   1. Convertors.
   2. Air separators.
   3. Expansion tanks.
   4. Flash tanks.

D. Manufacturer's certificates for underground pre-insulated chilled water piping:
   1. That the field representative for the factory insulated pipe installation is technically qualified and experienced in installation of the manufacturer's system and is qualified to provide the required site reports.
   2. Upon completion of the work and before final acceptance, the Contractor shall deliver a notarized statement, signed by a principal officer of both the manufacturing firm and the contracting firm, stating that the installation is satisfactory and in accordance with the plans, specifications, and manufacturer's standards.

E. Submit prior to welding of steel piping a certificate of Welder's certification. The certificate shall be current and not more than one year old.

F. Calculations for thrust blocking for underground pre-insulated piping.

G. Coordination Drawings: Refer to Article, SUBMITTALS of Section 23 05 11, COMMON WORK RESULTS FOR HVAC AND STEAM GENERATION.

H. As-Built Piping Diagrams: Provide drawing as follows for chilled water, condenser water, and heating hot water system and other piping systems and equipment.

1. One wall-mounted stick file with complete set of prints. Mount stick file in the chiller plant or control room along with control diagram stick file.
2. One complete set of reproducible drawings in Mylar.
3. One complete set of drawings in electronic AutoCAD DWG format.

1.5 APPLICABLE PUBLICATIONS

A. The publications listed below form a part of this specification to the extent referenced. The publications are referenced in the text by the basic designation only, as listed, or superseded by latest editions.

B. American Society of Mechanical Engineers (ASME):

B1.20.1-83.....Pipe Threads, General Purpose (Inch)
B16.1-98.....Cast Iron Pipe Flanges and Flanged Fittings
B16.3-98.....Malleable Iron Threaded Fittings
B16.4-98.....Gray Iron Threaded Fittings
B16.5-03.....Pipe Flanges and Flanged Fittings
B16.9-03.....Factory-Made Wrought Buttwelding Fittings
B16.11-05.....Forged Fittings, Socket-Welding and Threaded
B16.14-91.....Ferrous Pipe Plugs, Bushings, and Locknuts with Pipe Threads
B16.22-01.....Wrought Copper and Copper Alloy Solder-Joint Pressure Fittings
B16.23-02.....Cast Copper Alloy Solder Joint Drainage Fittings
B16.24-01.....Cast Copper Alloy Pipe Flanges and Flanged Fittings, Class 150, 300, 400, 600, 900, 1500 and 2500
B16.39-98.....Malleable Iron Threaded Pipe Unions, Classes 150, 250, and 300
B16.42-98.....Ductile Iron Pipe Flanges and Flanged Fittings: Classes 150 and 300

B31.1-01.....Power Piping

B31.9-04.....Building Services Piping

B40.100-05.....Pressure Gauges and Gauge Attachments

C. American National Standards Institute, Inc. (ANSI):

B16.1 00.....Cast Iron Pipe Flanges and Flanged Fittings, Class 25, 125 and 250

B16.3 00.....Malleable Iron Threaded Fittings Classes 150 and 300

B16.5 03.....Pipe Flanges and Flanged Fittings NPS ½ through NPS 24

B16.9 03.....Factory Made Wrought Butt Welding Fittings

B16.11 01.....Forged Fittings, Socket Welding and Threaded

B16.14 91.....Ferrous Pipe Plugs, Bushings and Locknuts with Pipe Threads

B16.18-01.....Cast Copper Alloy Solder joint Pressure fittings

B16.22 00.....Wrought Copper and Bronze Solder Joint Pressure Fittings

B16.24 01.....Cast Copper Alloy Pipe Fittings and Flanged Fittings: Class 150, 300, 400, 600, 900, 1500 and 2500

B31.1 01.....Power Piping

D. American Society for Testing and Materials (ASTM):

A47/A47M-99 (2004).....Ferritic Malleable Iron Castings

A53/A53M-06.....Standard Specification for Pipe, Steel, Black and Hot-Dipped, Zinc-Coated, Welded and Seamless

A106/A106M-06.....Standard Specification for Seamless Carbon Steel Pipe for High-Temperature Service

A126-04.....Standard Specification for Gray Iron Castings for Valves, Flanges, and Pipe Fittings

A181/A181M-01.....Standard Specification for Carbon Steel Forgings, for General-Purpose Piping

A183-03 ..... Standard Specification for Carbon Steel Track Bolts and Nuts

A216/A216M-04 ..... Standard Specification for Steel Castings, Carbon, Suitable for Fusion Welding, for High Temperature Service

A234/A234M 04 ..... Piping Fittings of Wrought Carbon Steel and Alloy Steel for Moderate and High Temperature Service

A307-04 ..... Standard Specification for Carbon Steel Bolts and Studs, 60,000 PSI Tensile Strength

A536-84 (2004) ..... Standard Specification for Ductile Iron Castings

A 615/A 615M-04 ..... Deformed and Plain Carbon Steel Bars for Concrete Reinforcement

A653/A 653M-04 ..... Steel Sheet, Zinc-Coated (Galvanized) or Zinc-Iron Alloy Coated (Galvannealed) By the Hot-Dip Process

B32-04 ..... Standard Specification for Solder Metal

B61-02 ..... Standard Specification for Steam or Valve Bronze Castings

B62-02 ..... Standard Specification for Composition Bronze or Ounce Metal Castings

B88-03 ..... Standard Specification for Seamless Copper Water Tube

B209 04 ..... Aluminum and Aluminum Alloy Sheet and Plate

C177 97 ..... Standard Test Method for Steady State Heat Flux Measurements and Thermal Transmission Properties by Means of the Guarded Hot Plate Apparatus

C478-03 ..... Precast Reinforced Concrete Manhole Sections

C533 03 ..... Calcium Silicate Block and Pipe Thermal Insulation

C552 03 ..... Cellular Glass Thermal Insulation

D 3350-02 ..... Polyethylene Plastics Pipe and Fittings Materials

C591-01 ..... Unfaced Preformed Rigid Cellular Polyisocyanurate Thermal Insulation

D1784 03 ..... Rigid Poly (Vinyl Chloride) (PVC) Compounds and Chlorinated Poly (Vinyl Chloride) (CPVC) Compounds

D1785 03 ..... Poly (Vinyl Chloride0 (PVC) Plastic Pipe, Schedules 40, 80 and 120

D2241 04 ..... Poly (Vinyl Chloride) (PVC) Pressure Rated Pipe (SDR Series)

D2464 99 ..... Threaded Poly (Vinyl Chloride) (PVC) Plastic Pipe Fittings, Schedule 80.

D3139 98 ..... Joints for Plastic Pressure Pipes Using Flexible Elastomeric Seals

F439-06 ..... Standard Specification for Chlorinated Poly (Vinyl Chloride) (CPVC) Plastic Pipe Fittings, Schedule 80

F441/F441M-02 ..... Standard Specification for Chlorinated Poly (Vinyl Chloride) (CPVC) Plastic Pipe, Schedules 40 and 80

F477-02 ..... Elastomeric Seals Gaskets) for Joining Plastic Pipe

E. American Water Works Association (AWWA):

C110/03.....Ductile Iron and Grey Iron Fittings for Water

C203 00.....Coal Tar Protective Coatings and Linings for Steel Water Pipe Lines Enamel and Tape Hot Applied

F. American Welding Society (AWS):

A5.8/A5.8M-04.....Specification for Filler Metals for Brazing and Braze Welding

B2.1-02.....Standard Welding Procedure Specification

G. Copper Development Association, Inc. (CDA):

CDA A4015-95.....Copper Tube Handbook

H. Expansion Joint Manufacturer's Association, Inc. (EJMA):

EMJA-2003.....Expansion Joint Manufacturer's Association Standards, Eighth Edition

I. Manufacturers Standardization Society (MSS) of the Valve and Fitting Industry, Inc.:

SP-67-02a.....Butterfly Valves

SP-70-06.....Gray Iron Gate Valves, Flanged and Threaded Ends

SP-71-05.....Gray Iron Swing Check Valves, Flanged and Threaded Ends

SP-72-99.....Ball Valves with Flanged or Butt-Welding Ends for General Service

SP-78-05.....Cast Iron Plug Valves, Flanged and Threaded Ends

SP-80-03.....Bronze Gate, Globe, Angle and Check Valves

SP-85-02.....Cast Iron Globe and Angle Valves, Flanged and Threaded Ends

J. National Sanitation Foundation (NSF):

14 03.....Plastic Piping System Components and Related Materials

K. Tubular Exchanger Manufacturers Association: TEMA 8th Edition, 2000

L. Sheet Metal and Air Conditioning Contractors National Association (SMACNA):

HVAC Duct Construction Standards, 2nd Edition 1997

PART 2 - PRODUCTS

2.1 PIPE AND EQUIPMENT SUPPORTS, PIPE SLEEVES, AND WALL AND CEILING PLATES

Provide in accordance with Section 23 05 11, COMMON WORK RESULTS FOR HVAC AND STEAM GENERATION.

2.2 PIPE AND TUBING

A. Chilled Water (above ground), Condenser Water (above ground), Heating Hot Water, Glycol-Water, and Vent Piping:
   1. Steel: ASTM A53 Grade B, seamless or ERW, Schedule 40.
   2. Copper water tube option: ASTM B88, Type K or L, hard drawn.
   3. Chilled water piping underground and optional piping in utility tunnels, pipe basements and crawl spaces: Factory prefabricated (pre-insulated chilled water piping.

B. Underground Condenser Water Piping: Ductile iron pipe and fittings, with mechanical joints, as specified in Section 33 10 00, WATER UTILITIES.

C. Extension of Domestic Water Make-up Piping: ASTM B88, Type K or L, hard drawn copper tubing.

D. Cooling Coil Condensate Drain Piping:
   1. From air handling units: Copper water tube, ASTM B88, Type M, or schedule 80 flame retardant polypropylene plastic.
   2. From fan coil or other terminal units: Copper water tube, ASTM B88, Type L for runouts and Type M for mains.

E. Chemical Feed Piping for Condenser Water Treatment: Chlorinated polyvinyl chloride (CPVC), Schedule 80, ASTM F441.

F. Pipe supports, including insulation shields, for above ground piping: Section 23 05 11, COMMON WORK RESULTS FOR HVAC AND STEAM GENERATION.

2.3 FITTINGS FOR STEEL PIPE

A. 65 mm (2-1/2 inches) and Larger: Welded or flanged joints. Mechanical couplings and fittings are optional for water piping only.
   1. Butt welding fittings: ASME B16.9 with same wall thickness as connecting piping. Elbows shall be long radius type, unless otherwise noted.
   2. Welding flanges and bolting: ASME B16.5:
      a. Water service: Weld neck or slip-on, plain face, with 6 mm (1/8 inch) thick full face neoprene gasket suitable for 104 degrees C (220 degrees F).
         1) Contractor's option: Convoluted, cold formed 150 pound steel flanges, with teflon gaskets, may be used for water service.

b. Flange bolting: Carbon steel machine bolts or studs and nuts, ASTM A307, Grade B.

B. 50 mm (2 inches) and Smaller: Screwed or welded. Mechanical couplings are optional for water piping only.
   1. Butt welding: ASME B16.9 with same wall thickness as connecting piping.
   2. Forged steel, socket welding or threaded: ASME B16.11.
   3. Screwed: 150 pound malleable iron, ASME B16.3. 125 pound cast iron, ASME B16.4, may be used in lieu of malleable iron. Bushing reduction of a single pipe size, or use of close nipples, is not acceptable.
   4. Unions: ASME B16.39.
   5. Water hose connection adapter: Brass, pipe thread to 20 mm (3/4 inch) garden hose thread, with hose cap nut.

C. Welded Branch and Tap Connections: Forged steel weldolets, or branchlets and threadolets may be used for branch connections up to one pipe size smaller than the main. Forged steel half-couplings, ASME B16.11 may be used for drain, vent and gage connections.

D. Mechanical Pipe Couplings and Fittings: May be used, with cut or roll grooved pipe, in water service up to 110 degrees C (230 degrees F) in lieu of welded, screwed or flanged connections.
   1. Grooved mechanical couplings: Malleable iron, ASTM A47 or ductile iron, ASTM A536, fabricated in two or more parts, securely held together by two or more track-head, square, or oval-neck bolts, ASTM A183.
   2. Gaskets: Rubber product recommended by the coupling manufacturer for the intended service.
   3. Grooved end fittings: Malleable iron, ASTM A47; ductile iron, ASTM A536; or steel, ASTM A53 or A106, designed to accept grooved mechanical couplings. Tap-in type branch connections are acceptable.

2.4 FITTINGS FOR COPPER TUBING

A. Solder Joint:
   1. Joints shall be made up in accordance with recommended practices of the materials applied. Apply 95/5 tin and antimony on all copper piping.
   2. Mechanically formed tee connection in water and drain piping: Form mechanically extracted collars in a continuous operation by drilling pilot hole and drawing out tube surface to form collar, having a height of not less than three times the thickness of tube wall. Adjustable collaring device shall insure proper tolerance and complete uniformity

of the joint. Notch and dimple joining branch tube in a single process to provide free flow where the branch tube penetrates the fitting.

B. Bronze Flanges and Flanged Fittings: ASME B16.24.

2.5 FITTINGS FOR PLASTIC PIPING

A. Schedule 80, socket type for solvent welding.

B. Polypropylene drain piping: Flame retardant, drainage pattern.

C. Chemical feed piping for condenser water treatment: Chlorinated polyvinyl chloride (CPVC), Schedule 80, ASTM F439.

2.6 DIELECTRIC FITTINGS

A. Provide where copper tubing and ferrous metal pipe are joined.

B. 50 mm (2 inches) and Smaller: Threaded dielectric union, ASME B16.39.

C. 65 mm (2 1/2 inches) and Larger: Flange union with dielectric gasket and bolt sleeves, ASME B16.42.

D. Temperature Rating, 99 degrees C (210 degrees F).

2.7 SCREWED JOINTS

A. Pipe Thread: ANSI B1.20.

B. Lubricant or Sealant: Oil and graphite or other compound approved for the intended service.

2.8 VALVES

A. Asbestos packing is not acceptable.

B. All valves of the same type shall be products of a single manufacturer. Provide gate and globe valves with packing that can be replaced with the valve under full working pressure.

C. Provide chain operators for valves 100 mm (4 inches) and larger when the centerline is located 2400 mm (8 feet) or more above the floor or operating platform.

D. Gate Valves:

1. 50 mm (2 inches) and smaller: MSS-SP80, Bronze, 1034 kPa (150 lb.), wedge disc, rising stem, union bonnet.
2. 65 mm (2 1/2 inches) and larger: Flanged, outside screw and yoke.
   a. MSS-SP 70, iron body, bronze mounted, 861 kPa (125 psig) wedge disc.

E. Globe, Angle and Swing Check Valves:

1. 50 mm (2 inches) and smaller: MSS-SP 80, bronze, 1034 kPa (150 lb.) Globe and angle valves shall be union bonnet with metal plug type disc.

2. 65 mm (2 1/2 inches) and larger: 861 kPa (125 psig), flanged, iron body, bronze trim, MSS-SP-85 for globe valves and MSS-SP-71 for check valves.

F. Non-Slam or Silent Check Valve: Spring loaded double disc swing check or internally guided flat disc lift type check for bubble tight shut-off. Provide where check valves are shown in chilled water and hot water piping. Check valves incorporating a balancing feature may be used.
   1. Body: Cast iron, ASTM A126, Class B, or steel, ASTM A216, Class WCB, or ductile iron, ASTM 536, flanged, grooved, or wafer type.
   2. Seat, disc and spring: 18-8 stainless steel, or bronze, ASTM B62. Seats may be elastomer material.

G. Butterfly Valves: May be used in lieu of gate valves in water service except for direct buried pipe. Provide stem extension to allow 50 mm (2 inches) of pipe insulation without interfering with valve operation.
   1. MSS-SP 67, flange lug type (for end of line service) or grooved end rated 1205 kPa (175 psig) working pressure at 93 degrees C (200 degrees F).
      a. Body: Cast iron, ASTM A126, Class B. Malleable iron, ASTM A47 electro-plated, or ductile iron, ASTM A536, Grade 65-45-12 electro-plated.
      b. Trim: Bronze, aluminum bronze, or 300 series stainless steel disc, bronze bearings, 316 stainless steel shaft and manufacturer's recommended resilient seat. Resilient seat shall be field replaceable, and fully line the body to completely isolate the body from the product. A phosphate coated steel shaft or stem is acceptable, if the stem is completely isolated from the product.
      c. Actuators: Field interchangeable. Valves for balancing service shall have adjustable memory stop to limit open position.
         1) Valves 150 mm (6 inches) and smaller: Lever actuator with minimum of seven locking positions, except where chain wheel is required.
         2) Valves 200 mm (8 inches) and larger: Enclosed worm gear with handwheel, and where required, chain-wheel operator.

H. Ball Valves: Brass or bronze body with chrome-plated ball with full port and Teflon seat at 2760 kPa (400 psig) working pressure rating. Screwed or solder connections. Provide stem extension to allow operation without interfering with pipe insulation.

I. Water Flow Balancing Valves: For flow regulation and shut-off. Valves shall be line size rather than reduced to control valve size and be one of the following types.
   1. Butterfly valve as specified herein with memory stop.
   2. Eccentric plug valve: Iron body, bronze or nickel-plated iron plug, bronze bearings, adjustable memory stop, operating lever, rated 861 kPa (125 psig) and 121 degrees C (250 degrees F).

J. Circuit Setter Valve: A dual purpose flow balancing valve and adjustable flow meter, with bronze or cast iron body, calibrated position pointer, valved pressure taps or quick disconnects with integral check valves and preformed polyurethane insulating enclosure. Provide a readout kit including flow meter, readout probes, hoses, flow charts or calculator, and carrying case.

K. Automatic Balancing Control Valves: Factory calibrated to maintain constant flow (plus or minus five percent) over system pressure fluctuations of at least 10 times the minimum required for control. Provide standard pressure taps and four sets of capacity charts. Valves shall be line size and be one of the following designs:
   1. Gray iron (ASTM A126) or brass body rated 1205 kPa (175 psig) at 93 degrees C (200 degrees F), with stainless steel piston and spring.
   2. Brass or ferrous body designed for 2067 kPa (300 psig) service at 121 degrees C (250 degrees F), with corrosion resistant, tamper proof, self-cleaning piston/spring assembly that is easily removable for inspection or replacement.
   3. Combination assemblies containing ball type shut-off valves, unions, flow regulators, strainers with blowdown valves and pressure temperature ports shall be acceptable.
   4. Provide a readout kit including flow meter, probes, hoses, flow charts and carrying case.

L. Manual Radiator/Convector Valves: Brass, packless, with position indicator.

2.9 WATER FLOW MEASURING DEVICES

A. Minimum overall accuracy plus or minus three percent over a range of 70 to 110 percent of design flow. Select devices for not less than 110 percent of design flow rate.

B. Venturi Type: Bronze, steel, or cast iron with bronze throat, with valved pressure sensing taps upstream and at the throat.

C. Wafer Type Circuit Sensor: Cast iron wafer-type flow meter equipped with readout valves to facilitate the connecting of a differential pressure meter. Each readout valve shall be fitted with an integral check valve designed to minimize system fluid loss during the monitoring process.

D. Self-Averaging Annular Sensor Type: Brass or stainless steel metering tube, shutoff valves and quick-coupling pressure connections. Metering tube shall be rotatable so all sensing ports may be pointed down-stream when unit is not in use.

E. Flow Measurement/Balance Valves: A system comprised of two valves of bronze and stainless steel metallurgy designed for 1205 kPa (175 psig) pressure at 121 degrees C (250 degrees F), with thermal insulation sleeve.
   1. Measurement and shut-off valve: An on/off ball valve with integral high regain venturi and dual quick connect valves with integral check valves and color coded safety caps for pressure/temperature readout.
   2. A butterfly balancing valve as specified herein, with memory stop and quick connect valve for pressure/temperature readout.

F. Insertion Turbine Type Sensor: Section 23 09 23, DIRECT-DIGITAL CONTROL SYSTEM FOR HVAC.

G. Flow Measuring Device Identification:
   1. Metal tag attached by chain to the device.
   2. Include meter or equipment number, manufacturer's name, meter model, flow rate factor and design flow rate in l/m (gpm).

H. Portable Water Flow Indicating Meters:
   1. Minimum 150 mm (6 inch) diameter dial, forged brass body, beryllium-copper bellows, designed for 1205 kPa (175 psig) working pressure at 121 degrees C (250 degrees F).
   2. Bleed and equalizing valves.
   3. Vent and drain hose and two 3000 mm (10 feet) lengths of hose with quick disconnect connections.
   4. Factory fabricated carrying case with hose compartment and a bound set of capacity curves showing flow rate versus pressure differential.
   5. Provide one portable meter for each range of differential pressure required for the installed flow devices.

I. Permanently Mounted Water Flow Indicating Meters: Minimum 150 mm (6 inch) diameter, or 450 mm (18 inch) long scale, for 120 percent of design flow rate, direct reading in lps (gpm), with three valve manifold and two shut-off valves.

2.10 STRAINERS

A. Basket or Y Type. Tee type is acceptable for water service.

B. Screens: Bronze, monel metal or 18-8 stainless steel, free area not less than 2-1/2 times pipe area, with perforations as follows: 1.1 mm (0.045 inch) diameter perforations.

2. 100 mm (4 inches) and larger: 3.2 mm (0.125 inch) diameter perforations.

C. Suction Diffusers: Specified in Section 23 21 23, HYDRONIC PUMPS.

2.11 FLEXIBLE CONNECTORS FOR WATER SERVICE

A. Flanged Spool Connector:

1. Single arch or multiple arch type. Tube and cover shall be constructed of chlorobutyl elastomer with full faced integral flanges to provide a tight seal without gaskets. Connectors shall be internally reinforced with high strength synthetic fibers impregnated with rubber or synthetic compounds as recommended by connector manufacturer, and steel reinforcing rings.

2. Working pressures and temperatures shall be as follows:

a. Connector sizes 50 mm to 100 mm (2 inches to 4 inches), 1137 kPa (165psig) at 121 degrees C (250 degrees F).

b. Connector sizes 125 mm to 300 mm (5 inches to 12 inches), 965 kPa (140 psig) at 121 degrees C (250 degrees F).

3. Provide ductile iron retaining rings and control units.

B. Mechanical Pipe Couplings:

See other fittings specified under Part 2, PRODUCTS.

2.12 EXPANSION JOINTS

A. Factory built devices, inserted in the pipe lines, designed to absorb axial cyclical pipe movement which results from thermal expansion and contraction. This includes factory-built or field-fabricated guides located along the pipe lines to restrain lateral pipe motion and direct the axial pipe movement into the expansion joints.

B. Manufacturing Quality Assurance: Conform to Expansion Joints Manufacturers Association Standards.

C. Bellows - Internally Pressurized Type:

1. Multiple corrugations of Type 304 or Type A240-321 stainless steel.

2. Internal stainless steel sleeve entire length of bellows.

3. External cast iron equalizing rings for services exceeding 340 kPa (50 psig).

4. Welded ends.

5. Design shall conform to standards of EJMA and ASME B31.1.
6. External tie rods designed to withstand pressure thrust force upon anchor failure if one or both anchors for the joint are at change in direction of pipeline.
7. Integral external cover.

D. Bellows - Externally Pressurized Type:
1. Multiple corrugations of Type 304 stainless steel.
2. Internal and external guide integral with joint.
3. Design for external pressurization of bellows to eliminate squirm.
4. Welded ends.
5. Conform to the standards of EJMA and ASME B31.1.
6. Threaded connection at bottom, 25 mm (one inch) minimum, for drain or drip point.
7. Integral external cover and internal sleeve.

E. Expansion Compensators:
1. Corrugated bellows, externally pressurized, stainless steel or bronze.
2. Internal guides and anti-torque devices.
3. Threaded ends.
4. External shroud.
5. Conform to standards of EJMA.

F. Expansion Joint Identification: Provide stamped brass or stainless steel nameplate on each expansion joint listing the manufacturer, the allowable movement, flow direction, design pressure and temperature, date of manufacture, and identifying the expansion joint by the identification number on the contract drawings.

I. Guides: Provide factory-built guides along the pipe line to permit axial movement only and to restrain lateral and angular movement. Guides must be designed to withstand a minimum of 15 percent of the axial force which will be imposed on the expansion joints and anchors. Field-built guides may be used if detailed on the contract drawings.

2.14 HYDRONIC SYSTEM COMPONENTS

A. Convertor: Shell and tube type, U-bend removable tube bundle, steam in shell, water in tubes, equipped with support cradles.
1. Maximum tube velocity: 2.3 m/s (7.5 feet per second).
2. Tube fouling factor: TEMA Standards, but not less than 0.001.
3. Materials:
a. Shell: Steel.
b. Tube sheet and tube supports: Steel or brass.

c. Tubes: 20 mm (3/4 inch) OD copper.

d. Head or bonnet: Cast iron or steel.

4. Construction: In accordance with ASME Pressure Vessel Code for 861 kPa (125 psig) working pressure for shell and tubes. Provide manufacturer's certified data report, Form No. U-1.

B. Optional Heat Transfer Package: In lieu of field erected individual components, the Contractor may provide a factory or shop assembled package of converters, pumps, and other components supported on a welded steel frame.

C. Air Purger: Cast iron or fabricated steel, 861 kPa (125 psig) water working pressure, for in-line installation.

D. Tangential Air Separator: ASME Pressure Vessel Code construction for 861 kPa (125 psig) working pressure, flanged tangential inlet and outlet connection, internal perforated stainless steel air collector tube designed to direct released air into expansion tank, bottom blowdown connection. Provide Form No. U-1. If scheduled on the drawings, provide a removable stainless steel strainer element having 5 mm (3/16 inch) perforations and free area of not less than five times the cross-sectional area of connecting piping.

E. Pressure Reducing Valve (Water): Diaphragm or bellows operated, spring loaded type, with minimum adjustable range of 28 kPa (4 psig) above and below set point. Bronze, brass or iron body and bronze, brass or stainless steel trim, rated 861 kPa (125 psig) working pressure at 107 degrees C (225 degrees F).

F. Pressure Relief Valve: Bronze or iron body and bronze or stainless steel trim, with testing lever. Comply with ASME Code for Pressure Vessels, Section 8, and bear ASME stamp.

I. Automatic Air Vent Valves (at all high points and where shown): Cast iron or semi-steel body, 1034 kPa (150 psig) working pressure, stainless steel float, valve, valve seat and mechanism, minimum 15 mm (1/2 inch) water connection and 6 mm (1/4 inch) air outlet. Pipe air outlet to drain.

2.15 WATER FILTERS AND POT CHEMICAL FEEDERS

See section 23 25 00, HVAC WATER TREATMENT, Article 2.2, CHEMICAL TREATMENT FOR CLOSED LOOP SYSTEMS.

2.16 GAGES, PRESSURE AND COMPOUND

A. ASME B40.100, Accuracy Grade 1A, (pressure, vacuum, or compound for air, oil or water), initial mid-scale accuracy 1 percent of scale (Qualify grade), metal or phenolic case, 115 mm (4-1/2 inches) in diameter, 6 mm

(1/4 inch) NPT bottom connection, white dial with black graduations and pointer, clear glass or acrylic plastic window, suitable for board mounting. Provide red "set hand" to indicate normal working pressure.

B. Provide brass lever handle union cock. Provide brass/bronze pressure snubber for gages in water service.

C. Range of Gages: Provide range equal to at least 130 percent of normal operating range.

1. For condenser water suction (compound): Minus 100 kPa (30 inches Hg) to plus 700 kPa (100 psig).

2.17 PRESSURE/TEMPERATURE TEST PROVISIONS

A. Pete's Plug: 6 mm (1/4 inch) MPT by 75 mm (3 inches) long, brass body and cap, with retained safety cap, nordel self-closing valve cores, permanently installed in piping where shown, or in lieu of pressure gage test connections shown on the drawings.

B. Provide one each of the following test items to the Resident Engineer:

1. 6 mm (1/4 inch) FPT by 3 mm (1/8 inch) diameter stainless steel pressure gage adapter probe for extra long test plug. PETE'S 500 XL is an example.

2. 90 mm (3-1/2 inch) diameter, one percent accuracy, compound gage, , ——100 kPa (30 inches) Hg to 700 kPa (100 psig) range.

3. 0 - 104 degrees C (220 degrees F) pocket thermometer one-half degree accuracy, 25 mm (one inch) dial, 125 mm (5 inch) long stainless steel stem, plastic case.

2.18 THERMOMETERS

A. Mercury or organic liquid filled type, red or blue column, clear plastic window, with 150 mm (6 inch) brass stem, straight, fixed or adjustable angle as required for each in reading.

B. Case: Chrome plated brass or aluminum with enamel finish.

C. Scale: Not less than 225 mm (9 inches), range as described below, two degree graduations.

D. Separable Socket (Well): Brass, extension neck type to clear pipe insulation.

E. Scale ranges may be slightly greater than shown to meet manufacturer's standard. Required ranges in degrees C (F):

Chilled Water and Glycol-Water 0 to 38 degrees C (32-100 degrees F)	Hot Water and Glycol-Water -1 to 116 degrees C (30 to 240 degrees F).

2.19 FIRESTOPPING MATERIAL

Refer to Section 23 05 11, COMMON WORK RESULTS FOR HVAC AND STEAM GENERATION.

2.20 FACTORY PREFABRICATED (PRE-INSULATED) CHILLED WATER PIPING

A. Inner Carrier Pipe:

1. Steel pipe: ASTM A53 black steel. Pipe up through 300 mm (12 inch) diameter shall be standard weight. Wall thickness for pipe larger than 300 mm (12 inch) diameter shall be not less than 10 mm (0.375 inch). Pipe larger than 50 mm (2 inches) shall be joined by welding.
2. Copper tubing: Shall conform to ASTM B88, Type L, joined by solder fittings.
3. Polyvinylchloride (PVC) Pipe, only for underground site applications: PVC pipe shall conform to ASTM D 2241 with a Standard Thermoplastic Pipe Dimension Ratio (SDR) of 26 and PVC 1120 or 1220 as the material. Pipe shall be NSF approved based on NSF 14 and shall be joined by integral bell and spigot joints or fittings, using rubber ring gaskets.

B. Outer Casing: Outer casing shall be galvanized sheet metal, polyvinylchloride, Polyethylene or Reinforced Thermosetting Resin Pipe as specified below:

1. Metal jacket (Above ground only): Spiral wound galvanized (G90) steel sheet, 0.70 mm (24 gage) minimum thickness, conforming to SMACNA HVAC Duct Construction Standards. Provide sheet metal covers for joints and fittings permanently attached by bands and rivets. Seal all lap seams in metal covers and weatherproof with silicone sealant or flexible polyurethane sealant strips. Shape covers to allow for insulation of mechanical coupling joints if used.
2. Polyvinyl chloride (PVC), only for underground site applications: Made of clean, virgin, NSF approved (based on Standard No. 14) Class 12454-B PVC compound conforming to ASTM D1785 and ASTM D1784, Type 1, Grade 1, with thickness as follows:

Casing Diameter	Minimum Thickness
150 mm (6 inches) and smaller	60 mils
200 mm (8 inches)	80 mils
250 mm (10 inches)	100 mils
300 mm (12 inches)	120 mils
350 mm (14 inches)	140 mils
450 mm (18 inches)	180 mils
600 mm (24 inches)	240 mils

For sizes not shown above, the minimum casing thickness in mils shall be equal to the numerical value of the casing diameter expressed in inches times a factor of 10.

3. Polyethylene (PE): Shall conform to ASTM D 3350, Type III, Class C, Category 3 or 4, Grade P 34 with thickness as follows:

Casing Diameter mm (inches)	Minimum Thickness (in mils)
200 (8) and smaller	75
225 to 500 (9 to 20)	150
525 to 550 (21 to 22)	165
575 to 600 (23 to 24)	200

Sizes larger than those shown above shall be approved in accordance with the Article, SUBMITTALS.

C. Factory Applied Insulation:

1. Foam insulation for prefabricated insulated pipe and fittings shall be polyurethane foam having a density not less than 32 kcm (2 pcf).
   a. Polyurethane foam shall conform to ASTM 591, Type II, formed for conduit, density not less than 32 kg/cubic meter (2 pcf).
   b. The insulation "k" factor shall not exceed the numerical value of 0.025 W/(m.k) (0.17 Btu-inch/h. square feet degree F) at 24 degrees C (75 degrees F) mean temperature in accordance with ASTM C177.
2. Insulation thickness for carrier pipe 75 mm (3 inches) nominal diameter and smaller: Not less than 18 mm (0.70 inch) or the standard manufactured thickness exceeding 18 mm (0.70 inch).
3. Insulation thickness for carrier pipe larger than 75 mm (3 inches) nominal diameter: 50 mm (2 inches) nominal, but not less than 38 mm (1-1/2 inches).

4. The polyurethane foam shall completely fill the annular space between the carrier pipe and the casing. Manufacturer shall certify that the insulated pipe is free of insulation voids and describe quality control procedure followed to meet this requirement.

D. Field Applied Insulation:

1. Insulation for valves, fittings, field casing closures, if required, and other piping system accessories shall be cellular glass conforming to ASTM C552, calcium silicate conforming to ASTM C533 or polyurethane matching the pipe insulation. Insulation shall be premolded, precut or job fabricated to fit and shall be removable and reusable. Thickness shall match adjacent piping.
2. Metal jackets shall be provided for all pipe insulation in manholes. Insulation bands shall be 19 mm (3/4-inch) wide [0.13 mm (0.005-inch)] thick // galvanized steel // stainless steel // or [0.02 mm (0.0007-inch) aluminum].
3. Buried fittings and accessories shall be factory fabricated and may have field foamed polyurethane insulation to match adjacent piping and shall be protected with a covering matching the pipe casing. Shrink sleeves shall be provided over casing connection joints.

E. End Seals:

1. General: Each pre-insulated section of piping shall have a complete sealing of the insulation to provide permanent water and vapor seal at each end of the pre-insulated section of piping. Pre-insulated sections of piping modified in the field shall be provided with an end seal which is equivalent to the end seals furnished with the pre-insulated section of piping. Provide complete sealing of the insulation at each end of each pre-insulated conduit section by one of the following methods:
   a. Carrying the outer casing over tapered pipe insulation ends and extending it to the carrier pipe. Provide sufficient surface bonding area between the casing and the carrier pipe to ensure a permanent water and vapor-resistant seal.
   b. Using specially designed prefabricated caps made of the same material and not less than the same thickness as the casing. Provide sufficient surface bonding area between the cap, and both the casing and carrier pipe, to ensure permanent water and vapor-resistant seal.

c. Using rubber ring gaskets designed and dimensioned to fit in the annular space between the casing and carrier pipe in such a manner as to ensure a permanent water and vapor-resistant seal.

d. Using shrink sleeves that shall be either heat shrinkable high temperature rubber or polyethylene material that can be bound to the carrier pipes and casing to ensure a permanent water and vapor-resistant seal.

2. Factory casing and end seal testing and certification:

a. Testing and certification procedures by an independent testing laboratory shall demonstrate that casings and end seals are capable of resisting penetration of water into the casing and insulation at 60 kPa (20 feet) of head pressure, measured above the highest point of the test sample, subjected over the entire surface of an 2.5 m (8-feet) test sample of prefabricated pipe for not less than 48 hours. Test shall use 24 degrees C (75 degree F) water for chilled water service, while the sample is either buried or encased in dry bedding sand with a minimum of 305 mm (12 inches) of sand all around sample. The carrier pipe size in the test section shall be 75 mm (3 inches) in diameter and shall be restrained during the test period. The insulation thickness shall not exceed the maximum thickness provided for the piping in the project.

b. Test results for Federal Agency Committee on Underground Heat Distribution System, or similar results may be substituted.

F. Couplings:

1. Insulated pipe couplings for copper tubing: Insulated pipe couplings for copper tubing shall be cast bronze containing an 0-ring seal on each end and shall be jacketed and sealed to act as an expansion joint.

2. Bell and spigot joints: Rubber ring joining system. Bell and spigot joints may also be of the bonded type where the joint is made up utilizing a suitable adhesive for the service specified. Adhesive shall be furnished by the pipe manufacturer.

3. Mechanical couplings for steel pipe: Mechanical couplings for steel pipe shall be the sleeve type or the type for grooved end pipe and shall provide a tight, flexible joint under all conditions including movements caused by expansion, contraction, slight settling or shifting in the ground, minor variations in trench gradients, and traffic vibrations. Coupling strength shall not be less than the connecting pipe sections. Sleeve-type couplings shall be used for

joining plain end pipe sections. The sleeve couplings shall consist of one steel middle ring, two steel followers, two gaskets, and the necessary steel bolts and nuts to compress the gaskets. Grooved end pipe couplings shall consist of identical coupling sections fastened in place, using track head bolts, ASTM A183, to confine a molded gasket over the pipe and gap. Couplings shall be malleable iron or ductile iron.

G. Joints:

1. Welded joints: Welded joints between sections of pipe and between pipe and fittings shall be provided where specified or indicated. Branch connections shall be made with either welding tees or forged branch outlet fittings attached to the main and reinforced against external strains.
2. Flanged joints: Flanged joints shall be provided with gaskets and made perfectly square and tight. Full-faced gaskets shall be used with cast-iron flanges and all gaskets shall be as thin as the finish of the flange face permits. Gaskets shall be 5 mm (3/16-inch) thick for 25 through 300 mm (1 through 12 inch) flanges and 6 mm (1/4-inch) thick for flanges 350 mm (14 inches) and larger.
3. Threaded joints: Joints shall be made tight with polytetrafluoroethylene tape applied to the male threads only. Not more than three threads shall show after the joint is made up.
4. Brazed and soldered joints: Brazed and soldered joints for copper pipe and fittings shall conform to CDA A 4015. Silver solder or brazing alloys, ASTM B32, melting above 593 degrees C (1100 degrees F) shall be utilized.
5. Mechanical joints: Sleeve and grooved pipe couplings shall be installed and protected against corrosion as recommended by the coupling manufacturer. Joints between nonmetallic and metallic carrier pipe shall be designed and furnished by the piping system manufacturer. The transition pieces shall be factory fabricated and shall be designed so that no field chemical welding of the carrier pipe will be required. Transitional joint connections to manhole steel piping shall be made inside the manhole except for prefabricated, pre-piped manholes where joints shall be outside the manhole wall.
6. Insulating joints and dielectric fittings: Shall be installed where shown.

7. Nonmetallic pipe joints: Nonmetallic pipe joints shall be installed in accordance with the written instructions of the manufacturer.

H Above Ground Piping (Tunnels, Pipe Basement, Crawl Space)

1. Contractors option in lieu of field insulated chilled water piping.
2. Factory prefabricated (pre-insulated with metal jacket) sections with field insulated joints and fittings. When mechanical joint couplings are used, stagger joints in adjacent pipe to minimize spacing between pipes.
3. Inner Carrier Pipe: Steel or copper only.
4. Joints and Fittings: Screwed, welding, mechanical joint or solder as specified in this section.
5. Support Saddles: Provide for piping supported on trapeze or similar bar type support. Fasten the support shield to the pipe with a 19 mm (3/4-inch) wide galvanized steel band near each end.

SPEC WRITER NOTE: For direct buried piping provide cathodic protection where required by soil conditions.

I. Direct Buried Underground Chilled Water Piping

1. Contractor's option of factory prefabricated sections, except that steel or copper carrier pipe shall be used under roads where cover is less than 610 mm (two feet).
2. Insulation Requirements: Factory insulate all chilled water supply piping, and all chilled water return piping 300 mm (12 inches) in diameter and smaller. Chilled water return piping, 350 mm (14-inch) diameter and larger, need not be insulated, except for piping in manholes. Joints and fittings in chilled water piping shall be field insulated.
3. Coating for uninsulated steel carrier piping: Field prime and wrap all uninsulated fittings and joints with polyethylene tape.
4. Steel pipe fittings:
   a. All steel welding fittings shall conform to ASTM A234.
      1) Butt-weld fittings shall conform to ANSI B16.9.
      2) Socket-weld fittings shall conform to ANSI B16.11.
      3) Long radius butt-weld elbows conforming to ANSI B16.9 shall be used unless specifically waived by the Resident Engineer.
      4) Threaded fittings shall conform to ANSI B16.3, Class 150.

5. Copper fittings: Wrought copper or copper alloy solder joint pressure fittings shall conform to ANSI B16.22. Cast copper alloy solder-joint pressure fittings shall conform to ANSI B16.18.
6. Pipe fittings for PVC pipe: PVC or cast iron. Make PVC fittings of the same type and grade material as the piping to which they will be connected. PVC fittings shall be furnished by the manufacturer who supplies the pipe with approval based on NSF Standard No. 14. All fittings shall have temperature and pressure ratings not less than the adjoining piping and shall be designed and fabricated with bells for use with rubber ring gaskets. Cast iron fittings shall conform to AWWA C110. Adapter fittings for other piping materials shall be furnished by the manufacturer who supplies the pipe.
7. Flanges and flanged fittings: All flanges shall be flat faced.
   a. Cast-iron threaded flanges shall conform to ANSI B16.1, 125 pound.
   b. Welded steel flanges shall conform to ANSI B16.5, Class 150.
   c. Bronze flanges shall conform to ANSI B16.24, 150 pound.
   d. PVC flanges shall conform to the dimensions of ANSI B16.5, Class 150.
8. Transitional joints: Carrier pipe joints between nonmetallic and metallic pipe shall be furnished by the piping system manufacturer and shall conform to the manufacturer's specifications. The transition pieces shall be factory prefabricated and be designed so that no field chemical welding of the carrier pipe will be required. Make carrier pipe joints between steel and copper with solder-threaded adapters and dielectric unions. Transitional joint connections to steel piping in manholes shall be made outside of the exterior wall surfaces of the manhole.
9. Gaskets: Elastomeric seals shall conform to ASTM F477.

2.21 THRUST BLOCKING FOR UNDERGROUND PRE-INSULATED CHILLED WATER PIPING

A. Thrust Blocking: Provide in all systems using the rubber ring method of joining the carrier pipe sections.
   1. Thrust Blocks shall be installed at the locations shown on the drawings or recommended by the pipe system manufacturer. Thrust blocks may not be required on all systems, and the need for thrust blocks shall be as recommended by the system manufacturer. Thrust blocks, if necessary, shall be installed at all changes in direction, changes in size, valves and terminal ends, such as plugs, caps and tees. Thrust blocks shall be concrete having a compressive strength of not less than 13780 kPa

(2000 psi) after 28 days and shall be in accordance with Section 03 30 00, CAST-IN-PLACE CONCRETE. Thrust blocks shall be placed between solid ground and the fitting to be anchored. Unless otherwise indicated or directed, the base and the thrust bearing sides of the thrust blocks shall be poured directly against undisturbed earth. The sides of the thrust blocks not subject to thrust may be poured against forms. Thrust blocks shall be placed so that the joints for all fittings will be accessible for repair wherever possible. No pipe joint shall be embedded in concrete. The thrust blocks shall provide for transfer of thrusts and reactions without exceeding the allowable stress of the concrete and shall be installed in accordance with pipe manufacturer's instructions. In muck or peat, all thrusts shall be resisted by piles or tie rods to solid foundations or by removal of peat or muck shall be replaced with ballast of sufficient stability to resist thrusts.

2. The area of backing required for reaction backing of both supply and return piping shall be calculated in accordance with Tables 1 and 2. The safe soil bearing load shall be determined for each site. Calculations covering these determinations shall be submitted to the Contracting Officer for approval prior to placing any reaction backing on the job.

Table 1: Thrust (Two Pipes), 1550 kPa (225 psig), and Class 1033 kPa (150 psig):

Pipe Size	Tees	90 Degree Bends	45 Degree Bends	22-1/2 Degree Bends
75 mm (3-inch)	5,670	8,050	4,360	2,180
100 mm (4-inch)	6,820	11,750	6,390	3,240
150 mm (6-inch)	7,050	24,200	13,200	6,620
200 mm (8-inch)	29,500	41,800	22,600	11,480
250 mm (10-inch)	48,250	68,500	37,000	18,750
300 mm (12-inch)	68,750	97,500	52,750	26,700
350 mm (14-inch)	93,400	132,000	71,700	36,000
400 mm (16-inch)	115,000	171,000	92,600	46,950
450 mm (18-inch)	153,000	217,500	119,000	60,400
500 mm (20-inch)	192,000	270,000	146,500	74,200

Table 2: Safe Soil Bearing Loads:

Soil	kPa	(psf)
*Muck, peat	0	0
Soft clay	47.9	1,000
Sand	95.8	2,000
Sand and gravel	143.7	3,000
Sand and gravel in clay matrix	191.6	4,000
Hard shale	479.0	10,000

*In muck or peat, all thrusts shall be resisted by piles or tie rods to solid foundations or by removal of peat or muck which will be replaced with ballast of sufficient stability to resist thrusts.

2.22 MANHOLES

A. General: Manholes shall be a standard prefabricated product of the piping distribution system manufacturer Concrete manhole dimensions shall be as approved. Sufficient room for maintenance shall be provided. Manholes shall be provided with 760 mm (30-inch) standard cast-iron frames and covers, minimum, or 910 mm by 910 mm (36- by 36-inch) watertight, hinged steel covers not less than 13 mm (1/2-inch) thick. Manholes shall be drained as shown. Concrete manholes shall be waterproofed in accordance with Section 07 12 00, BUILT-UP BITUMINOUS WATERPROOFING.

B. Prefabricated Manholes: Prefabricated manholes shall be of welded steel or other material of air-testable construction. The Contractor shall submit manufacturer's data containing a complete description of the manhole and coating for steel manholes in accordance with paragraph, SUBMITTALS. Material thicknesses for manhole shells and accessories shall be in accordance with the manufacturer's published data and in no case less than 4.2 mm (8 gage) for zinc-coated corrugated steel, 6.4 mm (1/4 inch) for black smooth-wall steel. The coating shall be applied to all surfaces inside and outside manhole. Exterior coating thickness shall be 60 mils. Exterior coating shall be coal tar primer and coal tar enamel in accordance with AWWA C203 or the manufacturer's equivalent coating supported by documentation. Interior shall be protected with phenolic paint, per the manufacturer's recommendation.

C. Ladders: Manhole ladders shall be fabricated of galvanized steel, shall have non-slip surfaces, and shall consist of uprights with steps or rungs or full, U-shaped steel rungs firmly embedded in walls. Uprights shall be firmly anchored to the manhole walls.

D. Piping and Equipment in Manholes: Piping and equipment in manholes shall be easily accessible without stepping on piping or equipment. Piping in manholes shall rest on suitable sidewall or floor supports equipped with cast-iron rollers except where pipes are anchored in manholes. Piping supported from the floor shall be mounted on minimum 153 mm (6-inch) thick concrete bases. All piping in manholes or other areas subject to access shall be steel, insulated and provided with a vapor barrier. Insulation shall be protected with metal jackets.

E. Metal Jackets for Piping and Accessories in Manholes:

1. Galvanized steel sheet: Corrugated or smooth steel sheet, 0.70 mm (0.0262 inch).

2. Aluminum sheet: Corrugated, embossed or smooth sheet, 0.41 mm (0.016-inch) nominal thickness shall conform to ASTM B209, temper H14 or H16, alloys 3003, 3105 or 5005. The inside of aluminum sheet shall have a vapor barrier coating. Vapor barrier coating shall be fire and weather resistant. Color shall be white.

H. Manhole Frames and Covers: Cast-iron frames and covers shall be of the type, style, and weight as shown on drawing. .

I. Sleeves: Provide sleeves wherever the distribution system passes through concrete or masonry walls, concrete floors, or roofs. Sleeves shall not be installed in structural members, except where indicated or approved. Sleeves shall be steel or cast iron with integral flanges where pipes pass through waterproofing membranes. For insulated systems the insulation and casing shall be continuous through the sleeve. Clearance between sleeves and the passing ring or outer casing shall be approximately 6 mm (1/4-inch) all around. Flashing materials and design shall be in accordance with the manufacturer's standards and shall be submitted to the Resident Engineer for approval prior to installation.

2.23 EXPANSION LOOPS FOR PRE-INSULATED CHILLED WATER PIPING

A. Factory fabricated of casing, insulation, and carrier piping identical to that furnished for straight runs. Loops shall be properly designed in accordance with the allowable stress limits indicated in ANSI B31.1 for the type of pipe used. Ship loops to the job site in the maximum size sections feasible in order to minimize the number of field joints. The loop casing shall be suitably sized and all special guides and supports designed so that pipe movement will be contained without crushing the insulation or causing other damage.

B. Field joints shall be made in straight runs of the loops and the number shall be kept to a minimum. Piping shall be cold sprung one-half the calculated maximum operational expansion during field assembly. L- and Z-bends shall conform to the requirements for expansion loops specified above.

2.24 ANCHORS FOR PRE-INSULATED CHILLED WATER PIPING

Anchor design shall be in accordance with the published data of the manufacturer and for prefabricated systems shall be factory fabricated by the system manufacturer. In all cases, the design shall be such that water penetration, condensation, or vapor transmission will not wet the insulation.

SPEC WRITER NOTE: Show vent and drain lines from the valves on drawings.

2.25 VACUUM AND AIR RELIEF VALVES

Vacuum and air relief valves shall be iron body with bronze trim, and stainless steel floats.

2.26 VALVE BOX

Shall be Cast iron extension box with screw or slide-type adjustment and flared base. Minimum thickness of metal shall be 5 mm (3/16 inch). Box shall be adapted, without full extension, to depth of cover required over pipe at valve location. Cast the word "CHILLED WATER" in cover. Provide [ ] "T" handle socket wrenches 16 mm (3/8 inch) round stock long enough to extend 600 mm (2 feet) above top of deepest valve box.

2.27 REINFORCING STEEL

Reinforcing steel shall be deformed bars, ASTM 615, Grade 40, unless otherwise noted.

2.28 BURIED UTILITY WARNING TAPE

Tape shall be 0.1 mm (0.004 inch) thick, 150 mm (6 inches) wide, yellow polyethylene with a ferrous metallic core, acid and alkali-resistant and shall have a minimum strength of 12,000 kPa (1750 psig) lengthwise and 10,300 kPa (1500 psig) crosswise with an elongation factor of 350 percent. Provide bold black letters on the tape identifying the type of system. Tape color and lettering shall be unaffected by moisture and other substances contained in the backfill material.

PART 3 - EXECUTION

3.1 GENERAL

A. The drawings show the general arrangement of pipe and equipment but do not show all required fittings and offsets that may be necessary to connect pipes to equipment, fan-coils, coils, radiators, etc., and to coordinate with other trades. Provide all necessary fittings, offsets and pipe runs based on field measurements and at no additional cost to the government. Coordinate with other trades for space available and relative location of HVAC equipment and accessories to be connected on ceiling grid. Pipe location on the drawings shall be altered by contractor where necessary to avoid interferences and clearance difficulties.

B. Store materials to avoid excessive exposure to weather or foreign materials. Keep inside of piping relatively clean during installation and protect open ends when work is not in progress.

C. Support piping securely. Refer to PART 3, Section 23 05 11, COMMON WORK RESULTS FOR HVAC AND STEAM GENERATION. Install convertors and other heat exchangers at height sufficient to provide gravity flow of condensate to the flash tank and condensate pump.

D. Install piping generally parallel to walls and column center lines, unless shown otherwise on the drawings. Space piping, including insulation, to provide 25 mm (one inch) minimum clearance between adjacent piping or other surface. Unless shown otherwise, slope drain piping down in the direction of flow not less than 25 mm (one inch) in 12 m (40 feet). Provide eccentric reducers to keep bottom of sloped piping flat.

E. Locate and orient valves to permit proper operation and access for maintenance of packing, seat and disc. Generally locate valve stems in overhead piping in horizontal position. Provide a union adjacent to one end of all threaded end valves. Control valves usually require reducers to connect to pipe sizes shown on the drawing. Install butterfly valves with the valve open as recommended by the manufacturer to prevent binding of the disc in the seat.

F. Offset equipment connections to allow valving off for maintenance and repair with minimal removal of piping. Provide flexibility in equipment connections and branch line take-offs with 3-elbow swing joints where noted on the drawings.

G. Tee water piping runouts or branches into the side of mains or other branches. Avoid bull-head tees, which are two return lines entering opposite ends of a tee and exiting out the common side.

H. Provide manual air vent at all piping system high points and drain valves at all low points.

I. Connect piping to equipment as shown on the drawings. Install components furnished by others such as:
   1. Water treatment pot feeders and condenser water treatment systems.
   2. Flow elements (orifice unions), control valve bodies, flow switches, pressure taps with valve, and wells for sensors.

J. Thermometer Wells: In pipes 65 mm (2-1/2 inches) and smaller increase the pipe size to provide free area equal to the upstream pipe area.

K. Firestopping: Fill openings around uninsulated piping penetrating floors or fire walls, with firestop material. For firestopping insulated piping refer to Section 23 07 11, HVAC, PLUMBING, AND BOILER PLANT INSULATION.

L. Where copper piping is connected to steel piping, provide dielectric connections.

3.2 PIPE JOINTS

A. Welded: Beveling, spacing and other details shall conform to ASME B31.1 and AWS B2.1. See Welder’s qualification requirements under "Quality Assurance" in Section 23 05 11, COMMON WORK RESULTS FOR HVAC AND STEAM GENERATION.

B. Screwed: Threads shall conform to ASME B1.20; joint compound shall be applied to male threads only and joints made up so no more than three threads show. Coat exposed threads on steel pipe with joint compound, or red lead paint for corrosion protection.

C. Mechanical Joint: Pipe grooving shall be in accordance with joint manufacturer's specifications. Lubricate gasket exterior including lips, pipe ends and housing interiors to prevent pinching the gasket during installation. Lubricant shall be as recommended by coupling manufacturer.

D. 125 Pound Cast Iron Flange (Plain Face): Mating flange shall have raised face, if any, removed to avoid overstressing the cast iron flange.

E. Solvent Welded Joints: As recommended by the manufacturer.

3.3 EXPANSION JOINTS (BELLOWS AND SLIP TYPE)

A. Anchors and Guides: Provide type, quantity and spacing as recommended by manufacturer of expansion joint and as shown. A professional engineer shall verify in writing that anchors and guides are properly designed for forces and moments which will be imposed.

B. Cold Set: Provide setting of joint travel at installation as recommended by the manufacturer for the ambient temperature during the installation.

C. Preparation for Service: Remove all apparatus provided to restrain joint during shipping or installation. Representative of manufacturer shall visit the site and verify that installation is proper.

D. Access: Expansion joints must be located in readily accessible space. Locate joints to permit access without removing piping or other devices. Allow clear space to permit replacement of joints and to permit access to devices for inspection of all surfaces and for adding packing.

3.4 INSTALLATION OF PRE-INSULATED CHILLED WATER PIPING

A. Handling and Storage: Handle and store conduits, pipes, and all accessories to ensure complete installation in a sound undamaged condition. Unloading, tacking, moving, and storing of materials shall be in strict accordance with the manufacturer's requirements. Take special care to ensure that materials which have exceeded their specified shelf life are not used in the installation of the system. Before installation all materials shall be inspected for defects. Materials found to be

defective before or after installation shall be repaired or replaced with sound material, with no additional expense to the Government.

B. Installation of Piping Systems:

1. Piping system furnished shall be installed in accordance with the piping system manufacturer's instructions. Piping shall be installed without springing or forcing other than what has been calculated for thermal expansion and contraction. Pipe ends shall have burrs removed by reaming and shall be installed to permit free expansion and contraction without damage to joints or hangers. Nonmetallic pipe cut in the field shall be machined to fit couplings or joints and shall be coated or treated to match standard factory coated ends. Copper tubing shall not be installed in the same trench with ferrous piping materials. When nonferrous metallic pipe (e.g., copper tubing) crosses any ferrous piping material, a minimum vertical separation of 300 mm (12 inches) shall be maintained between pipes. Connections between different types of pipe and accessories shall be made with transition fittings approved by the manufacturer of the piping system.
2. Pitching of horizontal piping: Horizontal piping shall be pitched at a grade not less than 25 mm (1 inch) in 12 m (40 feet) toward the drain points unless otherwise indicated.
3. Install vacuum and air relief valves, as required, for filling and draining of the system.

C. Valve Boxes:

1. Set cover flush with finished grade.
2. Protect boxes located in roadway against movement by a concrete slab at least 900 mm (3 foot) square by 150 mm (6 inches) deep.
3. Set other valve boxes with a concrete slab 450 mm (18 inches) by 450 mm (18 inches) by 150 mm (6 inches) deep and set flush with grade.
4. All exposed portions of valve boxes shall be painted "Traffic Yellow."

D. Pipe Sleeves:

1. Pipe shall be continuous through sleeves. Set in place before concrete is poured.
2. Seal between sleeve and core opening with modular mechanical type link seal.
3. Provide where water lines pass through retaining walls and foundation walls.

E. Cutting of Prefabricated Conduit Sections: Prefabricated conduit sections shall be cut in strict accordance with the manufacturer's recommendations

and standards. The cut section shall be treated as required to result in the cut section being identical in every respect to a standard conduit section produced at the factory.

F. Field Casing Closures: Field insulation and encasement of joints shall be accomplished after the visual and pressure tests specified are completed. Field insulation and encasement shall be in accordance with the manufacturer's written instructions. Thickness dimensions of the insulation and casing materials shall not be less than those of the adjoining prefabricated section. Insulating material may be foamed in place polyurethane or premolded polyurethane foam sections. Care should be taken to ensure that field closures are made under conditions of temperature and cleanliness required to produce a sound continuous vapor barrier. A standard polyethylene heat shrink sleeve shall be installed over the casing and shall have a 150 mm (6-inch minimum) overlap at each end.

G. Insulation and Encasement of Pipe Accessories: Flanges, couplings, unions, valves, fittings, and other pipe accessories, unless otherwise shown or approved, shall be insulated with removable factory premolded, prefabricated or field fabricated insulation. For accessories buried underground, the casing material and thickness shall be identical to that of the adjoining casing material and thickness shall be identical to that of the adjoining casing except that for polyethylene casing larger than 300 mm (12-inch) size, the casing material over fittings shall be reinforced thermosetting resin (RTRP). For accessories in manholes, the casing material shall be steel or aluminum sheet applied over the insulation. Where accessories are designated not to be insulated, the adjoining insulation and jacket shall terminate neatly and in a manner to provide a complete vapor seal.

H. Trenching and Backfilling: Trench bottoms for underground prefabricated conduit systems shall be smooth and free of sharp objects, stones, and debris that could puncture the casing. Where this is a problem, the trench should be over excavated and stabilized by using sand, fine dirt, or similar material. Partial backfilling is required immediately after installation of the pipe. Selected backfill shall be tamped in not more than 150 mm (6 inch) layers under and around the conduit to a height of not less than 150 mm (6-inch) above the top of the casing. During this process, joints shall be left exposed for visual inspection during field tests.

I. Open Ends: Open ends of pipe lines and equipment shall be properly capped or plugged during installation to keep dirt and other foreign matter out of the system.

J. Vapor Barrier: Install materials to provide and preserve the integrity of the vapor barrier.

K. Prefabricated Manhole Tests: Each prefabricated manhole shall be air-tested and steel manholes spark-tested after installation and before backfill to prove water tightness and corrosion resistance.

1. Air pressure test: Air pressure test procedure shall be at a pressure of 34 kPa (5 psig). Manhole shall hold pressure for 2 hours. All seams and penetrations shall be coated with a soap solution to aid in detecting leaks. All leaks shall be repaired and proved tight. Protective coating shall be touched up at all repair points.

2. Holiday detector test: After visual examination and before installation, a holiday detector test shall be performed on the coated portion of steel manholes. The tests shall be accomplished with a silicone rubber electric wire brush or a coil probe testing set connected to an operating bell, buzzer or other audible signal which will sound when a holiday is detected at 5000 crest voltage, plus or minus 5 percent. The tester shall be of a type which cannot be adjusted in the field. Calibration by the manufacturer of the tester shall be required at 6-month intervals, or sooner, whenever crest voltage is questionable. The manufacturer of the tester shall certify in writing the date of calibration and crest voltage setting. The battery shall be maintained at a charge ample to produce the crest voltage during all tests. Voids detected shall be repaired by using material identical to that of the original coating. The repaired sections shall be retested to prove that there is no holiday present.

3.5 SEISMIC BRACING ABOVEGROUND PIPING

Provide in accordance with Section 13 05 41, SEISMIC RESTRAINT REQUIREMENTS FOR NON-STRUCTURAL COMPONENTS.

3.6 LEAK TESTING ABOVEGROUND PIPING

A. Inspect all joints and connections for leaks and workmanship and make corrections as necessary, to the satisfaction of the Resident Engineer. Tests may be either of those below, or a combination, as approved by the Resident Engineer.

B. An operating test at design pressure, and for hot systems, design maximum temperature.

C. A hydrostatic test at 1.5 times design pressure. For water systems the design maximum pressure would usually be the static head, or expansion tank maximum pressure, plus pump head. Factory tested equipment (convertors, exchangers, coils, etc.) need not be field tested. Isolate equipment where necessary to avoid excessive pressure on mechanical seals and safety devices.

3.7 FLUSHING AND CLEANING PIPING SYSTEMS

A. Water Piping: Clean systems as recommended by the suppliers of chemicals specified in Section 23 25 00, HVAC WATER TREATMENT.

1. Initial flushing: Remove loose dirt, mill scale, metal chips, weld beads, rust, and like deleterious substances without damage to any system component. Provide temporary piping or hose to bypass coils, control valves, exchangers and other factory cleaned equipment unless acceptable means of protection are provided and subsequent inspection of hide-out areas takes place. Isolate or protect clean system components, including pumps and pressure vessels, and remove any component which may be damaged. Open all valves, drains, vents and strainers at all system levels. Remove plugs, caps, spool pieces, and components to facilitate early debris discharge from system. Sectionalize system to obtain debris carrying velocity of 1.8 m/S (6 feet per second), if possible. Connect dead-end supply and return headers as necessary. Flush bottoms of risers. Install temporary strainers where necessary to protect down-stream equipment. Supply and remove flushing water and drainage by various type hose, temporary and permanent piping and Contractor's booster pumps. Flush until clean as approved by the Resident Engineer.
2. Cleaning: Using products supplied in Section 23 25 00, HVAC WATER TREATMENT, circulate systems at normal temperature to remove adherent organic soil, hydrocarbons, flux, pipe mill varnish, pipe joint compounds, iron oxide, and like deleterious substances not removed by flushing, without chemical or mechanical damage to any system component. Removal of tightly adherent mill scale is not required. Keep isolated equipment which is "clean" and where dead-end debris accumulation cannot occur. Sectionalize system if possible, to circulate at velocities not less than 1.8 m/S (6 feet per second). Circulate each section for not less than four hours. Blow-down all strainers, or remove and clean as frequently as necessary. Drain and prepare for final flushing.

3. Final Flushing: Return systems to conditions required by initial flushing after all cleaning solution has been displaced by clean make-up. Flush all dead ends and isolated clean equipment. Gently operate all valves to dislodge any debris in valve body by throttling velocity. Flush for not less than one hour.

3.8 TESTING UNDERGROUND PRE-INSULATED CHILLED WATER PIPING

A. First Hydrostatic Test:

1. All distribution piping shall be tested hydrostatically, before backfilling, with the joints of the water carrier pipe exposed. Installation of thrust blocks prior or after hydrostatic testing shall be as recommended by the pipe manufacturer's installation instructions.
2. Each test cycle shall consist of a 10 minute period at 1034 kPa (150 psig) followed by a 5 minute period at a pressure less than 345 kPa (50 psig). The next cycle shall begin immediately following the completion of the previous cycle. Pressure rise and drop shall not exceed 690 kPa (100 psig) per minute. The pressure gage shall be located and the pressure measured at the opposite end of the system from where the pressure is applied. After completion of the hydrostatic pressure cycling the first hydrostatic pressure test may be performed.

C. Final Hydrostatic Test: After successful completion of the first hydrostatic test, the system shall be pressurized to 1-1/2 times the working pressure up to 1034 kPa (150 psig). This pressure shall be held for a minimum of 4 hours. The method of pressurizing the piping system is to disconnect it from the system prior to the start of the 4-hour pressure holding period. If the pressure cannot be held for the specified length of time, the cause of the pressure loss shall be determined, corrected, and all the tests be repeated.

D. Repair joints, replace damaged or porous pipe and fittings and repeat the test without additional cost to the Government until the system can be demonstrated to have no leakage.

3.9 WATER TREATMENT

A. Install water treatment equipment and provide water treatment system piping.

B. Close and fill system as soon as possible after final flushing to minimize corrosion.

C. Charge systems with chemicals specified in Section 23 25 00, HVAC WATER TREATMENT.

D. Utilize this activity, by arrangement with the Resident Engineer, for instructing Owner operating personnel.

3.10 ELECTRIC HEAT TRACING

A. Install tracing as recommended by the manufacturer.

B. Coordinate electrical connections.

3.11 OPERATING AND PERFORMANCE TEST AND INSTRUCTION

A. Refer to PART 3, Section 23 05 11, COMMON WORK RESULTS FOR HVAC AND STEAM GENERATION.

B. Adjust red set hand on pressure gages to normal working pressure.

- - - E N D - - -

SECTION 232123 - HYDRONIC PUMPS

PART 1 - GENERAL

1.1 SUMMARY

A. Section Includes:
   1. Separately coupled, base-mounted, end-suction centrifugal pumps.

1.2 DEFINITIONS

A. ECM: Electronically commutated motor.

B. EPDM: Ethylene propylene diene monomer.

C. EPR: Ethylene propylene rubber.

D. EPT: Ethylene propylene terpolymer.

E. FKM: Fluoroelastomer polymer.

F. HI: Hydraulic Institute.

G. NBR: Nitrile rubber or Buna-N.

H. ODP: Open, drip proof.

I. TEFC: Totally enclosed, fan-cooled.

J. TENV: Totally enclosed, non-ventilated.

K. VFD: Variable-frequency controller.

1.3 ACTION SUBMITTALS

A. Product Data: For each type of pump.

   1. Include published performance curves and rated capacities, operating characteristics, furnished specialties, final impeller dimensions, and accessories for each type of product indicated.
   2. Indicate pump's operating point on curves.

B. Shop Drawings: For each pump.

   1. Show pump layout and connections.

2. Include setting drawings with templates for installing foundation and anchor bolts and other anchorages.
3. Include diagrams for power, signal, and control wiring.

C. Delegated Design Submittal: For each pump.

1. Design calculations and vibration isolation base details, signed and sealed by a qualified engineer.

a. Design Calculations: Calculate requirements for selecting vibration isolators and seismic restraints and for designing vibration isolation bases.
b. Vibration Isolation Base Details: Detail fabrication, including anchorages and attachments to structure and to supported equipment. Include adjustable motor bases, rails, and frames for equipment mounting.

1.4 INFORMATIONAL SUBMITTALS

A. Coordination Drawings: Plans, or BIM model, drawn to scale, showing the items described in this Section, and coordinated with all building trades.

B. Seismic Qualification Data: Certificates for pumps, accessories, and components.

1. Basis for Certification: Indicate whether withstand certification is based on actual test of assembled components or on calculation.
2. Dimensioned Outline Drawings of Equipment Unit: Identify center of gravity and locate and describe mounting and anchorage provisions.
3. Detailed description of equipment anchorage devices on which the certification is based and their installation requirements.

C. Field quality-control reports.

1.5 CLOSEOUT SUBMITTALS

A. Operation and Maintenance Data: For pumps to include in operation, and maintenance manuals.

1.6 MAINTENANCE MATERIAL SUBMITTALS

A. Furnish spare parts that match products installed and that are packaged with protective covering for storage and identified with labels describing contents.

1. Seal Kit: **One** mechanical seal kit for each pump.
2. Bearings.
3. Gaskets.
4. Coupling: Two per model.

PART 2 - PRODUCTS

2.1 PERFORMANCE REQUIREMENTS

A. Provide pumps and associated equipment that are in compliance with energy conservation guidelines published in 2020 by the U.S. Department of Energy Rulemaking Committee for commercial and industrial pumps.

B. Electrical Components, Devices, and Accessories: Listed and labeled as defined in NFPA 70, by a qualified testing agency, and marked for intended location and application.

C. Delegated Design: Engage a qualified professional engineer, as specified," to design vibration isolation and seismic restraints.

D. Seismic Performance: Pumps to withstand the effects of earthquake motions determined in accordance with ASCE/SEI-7 and PRBC-2018.

1. The term "withstand" means "the unit will remain in place without separation of any parts from the device when subjected to the seismic forces specified and the unit will be fully operational after the seismic event."
2. Component Importance Factor: 1.5.

2.2 SEPARATELY COUPLED, BASE-MOUNTED, END-SUCTION CENTRIFUGAL PUMPS

A. Basis-of-Design Product: Subject to compliance with requirements, provide Taco Comfort Solutions, Inc.; FI Series, models as specified in drawing schedules, or comparable product by one of the following:

1. Bell & Gossett.
2. Armstrong Pumps.
3. AC Pumps.

B. Source Limitations: Obtain pumps from single source from single manufacturer through local authorized manufacturer’s representative. Pumps performance shall be factory tested and certified. No “secondary/replacement market” pumps shall be accepted.

C. Description: Factory-assembled and -tested, centrifugal, API 610-OH1-type, overhung-impeller, separately coupled, end-suction pump with flexible shaft coupling as defined in HI 14.1, HI 14.2 and HI 14.3; designed for base mounting, with pump and motor shafts horizontal.

A. Pump Construction:

1. Casing: Radially split, cast iron, with replaceable bronze wear rings, threaded gauge tappings at inlet and outlet, drain plug at bottom and air vent at top of volute, and flanged connections.
2. Impeller: ASTM B584, cast bronze; statically and dynamically balanced, keyed to shaft, and secured with a locking cap screw. For pumps that are not variable-frequency-drive controlled, trim impeller to match specified performance.
3. Pump Shaft Sleeve: Type 303 stainless steel
4. Pump Shaft: Type 416 stainless steel.
5. Seal, Mechanical Type: Mechanical seal consisting of carbon rotating ring against a ceramic seat held by a stainless steel spring, and EPDM bellows and gasket.
6. Pump Bearings: Grease-lubricated ball bearings in cast-iron housing with grease fittings for lubrication in field.

B. Shaft Coupling: Molded-rubber insert capable of absorbing vibration. EPDM coupling sleeve for variable-frequency applications.

C. Coupling Guard: Dual rated; ANSI B15.1, Section 8; OSHA 1910.219 approved; steel; removable; attached to mounting frame.

D. Mounting Frame: Welded-steel frame and cross members, factory fabricated from ASTM A36/A36M channels and angles. Fabricate to mount pump casing, coupling guard, and motor.

E. Motor: Comply with NEMA designation, temperature rating, service factor, and efficiency requirements for motors specified in Section 230513 "Common Motor Requirements for HVAC Equipment."
1. NEMA Premium Efficient motors as defined in NEMA MG 1.
2. Motor Sizes: Minimum size as indicated. If not indicated, large enough so driven load will not require motor to operate in service factor range above 1.0.
3. Controllers, Electrical Devices, and Wiring: Comply with requirements for electrical devices and connections specified in electrical Sections.
4. Variable-speed motor.
5. Provide pump motor variable-frequency controller.
6. Select motors for listed voltage per schedules.

F. Capacities and Characteristics:

1. Capacity waterflow as specified in drawing schedules; gpm (L/s)>.
2. Total Dynamic Head as specified in drawing schedules; Feet H_20 (kPa)>.
3. Maximum Operating Pressure: 175 psig (1204 kPa).
4. Maximum Continuous Operating Temperature: 225 deg F (107 deg C).
5. Inlet and Outlet Size: as specified in drawing schedules.
6. Impeller Size: As specified in drawing schedules.
7. Motor Speed: As specified in drawing schedules.
8. Motor Horsepower: As specified in drawing schedules.
9. Non Overloading Horsepower: As specified in drawings schedules.
10. Electrical Characteristics:

    a. Volts: 460V.
    b. Phase: Three.
    c. Hertz: 60 Hz.
    d. Full-Load Amperes: Per manufacturer’s selection a NOL HP.

2.3 INTEGRAL PUMP MOTOR VARIABLE-FREQUENCY CONTROLLERS

A. Where specified or scheduled, provide pumps with an integral variable-frequency pump motor speed controller.

1. Motor: Operates as constant- or variable-speed pump with speed regulated by an integrated variable-frequency drive.
2. Commissioning and pump set up access to pump controls via the following:

    a. A user interface located on the face of variable-frequency controller to adjust modes and mode values.

3. Provide electronics with "Auto" as factory default but slope of the proportional curve will automatically match the required system curve, constant pressure control (delta-p/c), variable differential pressure control (delta-p/v), constant curve duty (uncontrolled pump), and rpm regulation. RPM (speed) regulation can be accomplished by the following:

    a. Manual, via user interface.
    b. Remote via 0 to 10 V dc.
    c. Data protocol communications with the BMS.

4. Pump Electronics: Provide multiple digital inputs and one external digital output to be available for mechanical room control and pump status monitoring.
5. Controller: Mount adjacent to the motor. Provide enclosure rated to UL Type 12.

6. Electronically Protected Pumps: Rated for continuous duty and with built-in startup circuit. Provide overcurrent, line surge and current limit protection, thermal monitoring, heat sink status and over temperature protection.
7. Integrated pump controller system to have the following features:

    a. Controller software to be capable of sensorless control in variable-volume systems without need for pump-mounted (internal/external) or remotely mounted differential pressure sensor.
    b. Provide Controller with:

        1) Minimum head of 40 percent of design duty head.
        2) User-adjustable control mode settings and minimum/maximum head set points using built-in programming interface.

    c. Provide Controller Integrated Control Software:

        1) Capable of controlling pump performance for non-overloading power at every point of operation.
        2) Capable of indicating flow rate data.

PART 3 - EXECUTION

3.1 EXAMINATION

A. Examine roughing-in for piping systems to verify actual locations of piping connections before pump installation.

B. Examine foundations and inertia bases for suitable conditions where pumps will be installed.

C. Proceed with installation only after unsatisfactory conditions have been corrected.

3.2 PUMP INSTALLATION

A. Comply with HI 14.4.

B. Install pumps to provide access for periodic maintenance including removing motors, impellers, couplings, and accessories.

C. Where required, independently support pumps and piping so weight of piping is not supported by pumps and weight of pumps is not supported by piping.

D. Equipment Mounting:

1. Install base-mounted pumps on cast-in-place concrete equipment bases. Comply with requirements for equipment bases and foundations specified in Section 033000 "Cast-in-Place Concrete."
2. Comply with requirements for vibration isolation and seismic restraint and control devices specified in references for Vibration Isolation and Seismic Supports for suspended utilities and equipment as delegated design.
3. Comply with requirements for vibration isolation of devices per standard practice and industry standards.

3.3 ALIGNMENT

A. Perform alignment service.

B. Comply with requirements in HI standards for alignment of pump and motor shaft. Add shims to the motor feet and bolt motor to base frame. Do not use grout between motor feet and base frame.

C. Comply with pump and coupling manufacturers' written instructions.

D. After alignment is correct, tighten foundation bolts evenly but not too firmly. Completely fill baseplate with nonshrink, nonmetallic grout while metal blocks and shims or wedges are in place. After grout has cured, fully tighten foundation bolts.

3.4 PIPING CONNECTIONS

A. Where installing piping adjacent to pump, allow space for service and maintenance.

B. Connect piping to pumps. Install valves that are same size as piping connected to pumps.

C. Install suction and discharge pipe sizes equal to or greater than diameter of pump nozzles as specified in drawings, including concentric reducers when vertical, eccentric reducers when horizontal.

D. Install triple-duty valve on discharge side of pumps.

E. Install suction diffuser and shutoff valve on suction side of pumps.

1. Use startup strainer for initial system startup. Install permanent strainer element before turnover of system to Owner.

F. Install flexible connectors on suction and discharge sides of base-mounted pumps between pump casing and valves.

G. Install pressure gauges on pump suction and discharge or at integral pressure-gauge tapping, or install single gauge with multiple-input selector valve.

3.5 ELECTRICAL CONNECTIONS

A. Connect wiring in accordance with "Low-Voltage Electrical Power Conductors and Cables" as specified in the electrical specification sections.

B. Ground equipment in accordance with "Grounding and Bonding for Electrical Systems" as specified in electrical specification sections.

C. Install electrical devices furnished by manufacturer, but not factory mounted, in accordance with NFPA 70 and NECA 1.

D. Install nameplate for each electrical connection, indicating electrical equipment designation and circuit number feeding connection.

1. Nameplate to be laminated acrylic or melamine plastic signs, as specified in sections of "Identification for Electrical Systems."
2. Nameplate to be laminated acrylic or melamine plastic signs with a black background and engraved white letters at least 1/2 inch (13 mm) high.

3.6 CONTROL CONNECTIONS

A. Install control and electrical power wiring to field-mounted control devices.

B. Connect control wiring in accordance with sections on "Control-Voltage Electrical Power Cables" or "Low Voltage Cabling or Wiring" in the electrical specifications.

3.7 STARTUP SERVICE

A. Contractor shall perform startup service.

1. Complete installation and startup checks in accordance with manufacturer's written instructions.
2. Check piping connections for tightness.
3. Clean strainers on suction piping. Use startup strainer for initial startup.

4. Perform the following startup checks for each pump before starting:

    a. Verify bearing lubrication.
    b. Verify that pump is free to rotate by hand and that pump for handling hot liquid is free to rotate with pump hot and cold. If pump is bound or drags, do not operate until cause of trouble is determined and corrected.
    c. Verify that pump is rotating in correct direction.

5. Prime pump by opening suction valves and closing drains, and prepare pump for operation.
6. Start motor.
7. Open discharge valve slowly.

3.8 FIELD QUALITY CONTROL

A. Testing Agency: Contractor shall **engage** a qualified testing agency to perform tests and inspections, NEBB or AABC certified with up-to-date credentials for principal and technicians.

B. Manufacturer's Field Service: Engage local manufacturer’s/service representative to test and inspect components, assemblies, and equipment installations, including connections.

C. Perform tests and inspections with the assistance of the local manufacturer’s/service representative.

D. Hydronic pumps will be considered defective if they do not pass tests and inspections.

E. Contractor shall prepare test and inspection reports per manufacturer’s recommendations and shall submit for record and approval.

3.9 DEMONSTRATION

A. Contractor shall train Owner's maintenance personnel to adjust, operate, and maintain hydronic pumps.

END OF SECTION 232123

SECTION 23 31 00
HVAC DUCTS AND CASINGS

PART 1 - GENERAL

1.1 DESCRIPTION

A. Ductwork and accessories for HVAC including the following:
   1. Supply air, return air, outside air, exhaust, make-up air, and relief systems.
   2. Exhaust duct with HEPA filters where indicated or specified on drawings.

B. Definitions:
   1. SMACNA Standards as used in this specification means the HVAC Duct Construction Standards, Metal and Flexible.
   2. Seal or Sealing: Use of liquid or mastic sealant, with or without compatible tape overlay, or gasketing of flanged joints, to keep air leakage at duct joints, seams and connections to an acceptable minimum.
   3. Duct Pressure Classification: SMACNA HVAC Duct Construction Standards, Metal and Flexible.
   4. Exposed Duct: Exposed to view in a finished room, exposed to weather.

1.2 RELATED WORK

A. Section 01 33 23, SHOP DRAWINGS, PRODUCT DATA, and SAMPLES.

B. Section 07 84 00, FIRESTOPPING: Fire Stopping Material.

C. Section 08 90 00, LOUVERS and VENTS: Outdoor and Exhaust Louvers.

D. Section 13 05 41, SEISMIC RESTRAINT REQUIREMENTS FOR NON-STRUCTURAL COMPONENTS: Seismic Reinforcing.

E. Section 23 05 11, COMMON WORK RESULTS FOR HVAC: General Mechanical Requirements.

G. Section 23 05 41, NOISE AND VIBRATION CONTROL FOR HVAC PIPING and EQUIPMENT: Noise Level Requirements.

H. Section 23 05 93, TESTING, ADJUSTING, and BALANCING FOR HVAC: Testing and Balancing of Air Flows.

I. Section 23 07 11, HVAC, INSULATION: Duct Insulation.

J. Section 23 09 23, DIRECT-DIGITAL CONTROL SYSTEM FOR HVAC: Duct Mounted Instrumentation.

K. Section 23 34 00, HVAC FANS: Return Air and Exhaust Air Fans.

L. Section 23 38 13, COMMERCIAL-KITCHEN HOODS: Kitchen Hoods.

M. Examine all drawings and criteria sheets and all other Sections of the Specifications for requirements, which affect work under this Section whether or not such work is specifically mentioned in this Section.

1.3 QUALITY ASSURANCE

A. Refer to article, QUALITY ASSURANCE, in Section 23 05 11, COMMON WORK RESULTS FOR HVAC.

B. Fire Safety Code: Comply with NFPA 90A.

C. Duct System Construction and Installation: Referenced SMACNA Standards are the minimum acceptable quality.

D. Duct Sealing, Air Leakage Criteria, and Air Leakage Tests: Ducts shall be sealed as per duct sealing requirements of SMACNA HVAC Air Duct Leakage Test Manual for duct pressure classes shown on the drawings.

E. Duct accessories exposed to the air stream, such as dampers of all types (except smoke dampers) and access openings, shall be of the same material as the duct or provide at least the same level of corrosion resistance.

1.4 SUBMITTALS

A. Submit in accordance with Section 01 33 23, SHOP DRAWINGS, PRODUCT DATA, and SAMPLES.

B. Manufacturer's Literature and Data:

1. Rectangular ducts:
   a. Schedules of duct systems, materials and selected SMACNA construction alternatives for joints, sealing, gage and reinforcement.
   b. Duct liner.
   c. Sealants and gaskets.
   d. Access doors.
2. Round and flat oval duct construction details:
   a. Manufacturer's details for duct fittings.
   b. Duct liner.
   c. Sealants and gaskets.
   d. Access sections.
   e. Installation instructions.
3. Volume dampers, back draft dampers.
4. Upper hanger attachments.
5. Fire dampers, fire doors, and smoke dampers with installation instructions.
6. Sound attenuators, including pressure drop and acoustic performance.

7. Flexible ducts and clamps, with manufacturer's installation instructions.
8. Flexible connections.
9. Instrument test fittings.
10 Details and design analysis of alternate or optional duct systems.
11 COMMON WORK RESULTS FOR HVAC.

C. Coordination Drawings: Refer to article, SUBMITTALS, in Section 23 05 11-COMMON WORK RESULTS FOR HVAC.

1.5 APPLICABLE PUBLICATIONS

A. The publications listed below form a part of this specification to the extent referenced. The publications are referenced in the text by the basic designation only.

B. American Society of Civil Engineers (ASCE):

ASCE7-2017.....Minimum Design Loads for Buildings and Other Structures

C. American Society for Testing and Materials (ASTM):

A167-2009.....Standard Specification for Stainless and Heat-Resisting Chromium-Nickel Steel Plate, Sheet, and Strip

A653-2019.....Standard Specification for Steel Sheet, Zinc-Coated (Galvanized) or Zinc-Iron Alloy coated (Galvannealed) by the Hot-Dip process

A1011-2018.....Standard Specification for Steel, Sheet and Strip, Hot rolled, Carbon, structural, High-Strength Low-Alloy, High Strength Low-Alloy with Improved Formability, and Ultra-High Strength

B209-2014.....Standard Specification for Aluminum and Aluminum-Alloy Sheet and Plate

C1071-2019.....Standard Specification for Fibrous Glass Duct Lining Insulation (Thermal and Sound Absorbing Material)

E84-2014.....Standard Test Method for Surface Burning Characteristics of Building Materials

D. National Fire Protection Association (NFPA):

90A-2018.....Standard for the Installation of Air Conditioning and Ventilating Systems

96-2018.....Standard for Ventilation Control and Fire Protection of Commercial Cooking Operations

E. Sheet Metal and Air Conditioning Contractors National Association (SMACNA):

3rd Edition –2006.....HVAC Duct Construction Standards, Metal and Flexible

2nd Edition -2012.....HVAC Air Duct Leakage Test Manual

6th Edition –2016.....Fibrous Glass Duct Construction Standards

F. Underwriters Laboratories, Inc. (UL):

181-2013.....Factory-Made Air Ducts and Air Connectors

555-2006 .....Standard for Fire Dampers

555S-2014.....Standard for Smoke Dampers

PART 2 - PRODUCTS

2.1 DUCT MATERIALS AND SEALANTS

A. General: Except for systems specified otherwise, construct ducts, casings, and accessories of galvanized sheet steel, ASTM A653, coating G90; or, aluminum sheet, ASTM B209, alloy 1100, 3003 or 5052.

B. Specified Corrosion Resistant Systems: Stainless steel sheet, ASTM A167, Class 302 or 304, Condition A (annealed) Finish No. 4 for exposed ducts and Finish No. 2B for concealed duct or ducts located in mechanical rooms.

C. Optional Duct Materials:

1. Grease Duct: Double wall factory-built grease duct, UL labeled and complying with NFPA 96 may be furnished in lieu of specified materials for kitchen and grill hood exhaust duct. Installation and accessories shall comply with the manufacturers catalog data. Outer jacket of exposed ductwork shall be stainless steel. Square and rectangular duct shown on the drawings will have to be converted to equivalent round size.

D. Joint Sealing: Refer to SMACNA HVAC Duct Construction Standards.

1. Sealant: Elastomeric compound, gun or brush grade, maximum 25 flame spread, and 50 smoke developed (dry state) compounded specifically for sealing ductwork as recommended by the manufacturer. Generally, provide liquid sealant, with or without compatible tape, for low clearance slip joints and heavy, permanently elastic, mastic type where clearances are larger. Oil base caulking and glazing compounds are not acceptable because they do not retain elasticity and bond.

2. Tape: Use only tape specifically designated by the sealant manufacturer and apply only over wet sealant. Pressure sensitive tape shall not be used on bare metal or on dry sealant.
3. Gaskets in Flanged Joints: Soft neoprene.

E. Approved factory-made joints may be used.

2.2 DUCT CONSTRUCTION AND INSTALLATION

A. Regardless of the pressure classifications outlined in the SMACNA Standards, fabricate and seal the ductwork in accordance with the following pressure classifications:

B. Duct Pressure Classification:

0 to 50 mm (2 inch)

> 50 mm to 75 mm (2 inch to 3 inch)

> 75 mm to 100 mm (3 inch to 4 inch)

Show pressure classifications on the floor plans.

C. Seal Class: All ductwork shall receive Class A Seal

C. Kitchen and Grill Hood (Ventilator) Exhaust Ducts: Comply with NFPA 96.

1. Material: 1.6 mm (16 gage) steel sheet (black iron), ASTM A1011, or 1.3 mm (18 gage) stainless steel. Use stainless steel for exposed duct in occupied areas. See Optional Duct Materials.
2. Construction: Liquid tight with continuous external weld for all seams and joints. Where ducts are not self draining back to the equipment, provide low point drain pocket with copper drain pipe to sanitary sewer. Provide access doors or panels for duct cleaning inside of horizontal duct at drain pockets, at 6 m (20 feet) intervals, and at each change of direction.
3. Access doors or panels shall be of the same material and thickness of the duct with gaskets and sealants that are rated 815 degrees C (1500 degrees F) and shall be grease-tight.
4. Grease Duct: Double-wall factory-built grease duct, UL labeled and complying with NFPA 96 may be furnished in lieu of specified materials for kitchen and grill hood exhaust. Installation and accessories shall comply with the manufacturers catalog data. Outer jacket of exposed ductwork shall be stainless steel. Square and rectangular duct shown in the drawings will have to be converted to equivalent round size.

D. Casings and Plenums: Construct in accordance with SMACNA HVAC Duct Construction Standards Section 6, including curbs, access doors, pipe penetrations, eliminators and drain pans. Access doors shall be hollow

metal, insulated, with latches and door pulls, 500 mm (20 inches) wide by 1200 - 1350 mm (48 - 54 inches) high. Provide view port in the doors where shown. Provide drain for outside air louver plenum. Outside air plenum shall have exterior insulation. Drain piping shall be routed to the nearest floor drain.

E. Volume Dampers: Single blade or opposed blade, multi-louver type as detailed in SMACNA Standards. Refer to SMACNA for Single Blade and Figure 2.13 for Multi-blade Volume Dampers.

F. Duct Hangers and Supports: Refer to SMACNA Standards Section IV. Avoid use of trapeze hangers for round duct.

2.3 DUCT LINER (WHERE INDICATED ON DRAWINGS)

A. Duct sizes shown on drawings for lined duct are clear opening inside lining.

B. Duct liner is only permitted to be used for return, relief and general exhaust ducts. Duct liner is not permitted for outside air ducts, supply air ducts or any other positive pressure ductwork (provide exterior insulation only).

C. Rectangular Duct or Casing Liner: ASTM C1071, Type I (flexible), or Type II (board), 25 mm (one inch) minimum thickness, applied with mechanical fasteners and 100 percent coverage of adhesive in conformance with SMACNA, Duct Liner Application Standard.

D. Round and Oval Duct Liner: Factory fabricated double-walled with // 25 mm (one inch) thick sound insulation and inner perforated galvanized metal liner. Construction shall comply with flame and smoke rating required by NFPA 90A. Metal liner shall be 1.0 to 0.60 mm (20 to 24 gage) having perforations not exceeding 2.4 mm (3/32 inch) diameter and approximately 22 percent free area. Metal liner for fittings need not be perforated. Assemblies shall be complete with continuous sheet Mylar liner, 2 mil thickness, between the perforated liner and the insulation to prevent erosion of the insulation. Provide liner couplings/spacer for metal liner. At the end of insulated sections, provide insulation end fittings to reduce outer shell to liner size. Provide liner spacing/concentricity leaving airway unobstructed.

2.4 DUCT ACCESS DOORS, PANELS AND SECTIONS

A. Provide access doors, sized and located for maintenance work, upstream, in the following locations:

1. Each duct mounted coil and humidifier.

2. Each fire damper (for link service), smoke damper and automatic control damper.
3. Each duct mounted smoke detector.
4. For cleaning operating room supply air duct and kitchen hood exhaust duct, locate access doors at 6 m (20 feet) intervals and at each change in duct direction.

B. Openings shall be as large as feasible in small ducts, 300 mm by 300 mm (12 inch by 12 inch) minimum where possible. Access sections in insulated ducts shall be double-wall, insulated. Transparent shatterproof covers are preferred for uninsulated ducts.
1. For rectangular ducts: Refer to SMACNA HVAC Duct Construction Standards (Figure 2-12).
2. For round and flat oval duct: Refer to SMACNA HVAC duct Construction Standards (Figure 2-11).

2.5 FIRE DAMPERS

A. Galvanized steel, interlocking blade type, UL listing and label, 1-1/2-hour rating, 70 degrees C (160 degrees F) fusible line, 100 percent free opening with no part of the blade stack or damper frame in the air stream.

B. Fire dampers in wet air exhaust shall be of stainless-steel construction, all others may be galvanized steel.

C. Minimum requirements for fire dampers:
1. The damper frame may be of design and length as to function as the mounting sleeve, thus eliminating the need for a separate sleeve, as allowed by UL 555. Otherwise provide sleeves and mounting angles, minimum 1.9 mm (14 gage), required to provide installation equivalent to the damper manufacturer's UL test installation.
2. Submit manufacturer's installation instructions conforming to UL rating test.

2.6 SMOKE DAMPERS

A. Maximum air velocity, through free area of open damper, and pressure loss: Low pressure and medium pressure duct (supply, return, exhaust, outside air): 450 m/min (1500 fpm). Maximum static pressure loss: 32 Pa (0.13 inch W.G.).

B. Maximum air leakage, closed damper: 0.32 cubic meters /min/square meter (4.0 CFM per square foot) at 750 Pa (3-inch W.G.) differential pressure.

C. Minimum requirements for dampers:

1. Shall comply with requirements of Table 6-1 of UL 555S, except for the Fire Endurance and Hose Stream Test.
2. Frame: Galvanized steel channel with side, top and bottom stops or seals.
3. Blades: Galvanized steel, parallel type preferably, 300 mm (12 inch) maximum width, edges sealed with neoprene, rubber or felt, if required to meet minimum leakage. Airfoil (streamlined) type for minimum noise generation and pressure drop are preferred for duct mounted dampers.
4. Shafts: Galvanized steel.
5. Bearings: Nylon, bronze sleeve or ball type.
6. Hardware: Zinc plated.
7. Operation: Automatic open/close. No smoke damper that requires manual reset or link replacement after actuation is acceptable. See drawings for required control operation.

D. Motor operator (actuator): Provide pneumatic or electric as required by the automatic control system, externally mounted on stand-offs to allow complete insulation coverage.

2.7 COMBINATION FIRE AND SMOKE DAMPERS

Combination fire and smoke dampers: Multi-blade type units meeting all requirements of both fire dampers and smoke dampers shall be used where shown and may be used at the Contractor's option where applicable.

2.8 FIRE DOORS

Galvanized steel, interlocking blade type, UL listing and label, 71 degrees C (160 degrees F) fusible link, 3-hour rating and approved for openings in Class A fire walls with rating up to 4 hours, 100 percent free opening with no part of the blade stack or damper frame in the air stream.

2.9 FLEXIBLE AIR DUCT

A. General: Factory fabricated, complying with NFPA 90A for connectors not passing through floors of buildings. Flexible ducts shall not penetrate any fire or smoke barrier which is required to have a fire resistance rating of one hour or more. Flexible duct length shall not exceed 1.5 m (5 feet). Provide insulated acoustical air duct connectors in supply air duct systems and elsewhere as shown.

B. Flexible ducts shall be listed by Underwriters Laboratories, Inc., complying with UL 181. Ducts larger than 200 mm (8 inches) in diameter

shall be Class 1. Ducts 200 mm (8 inches) in diameter and smaller may be Class 1 or Class 2.

C. Insulated Flexible Air Duct: Factory made including mineral fiber insulation with maximum C factor of 0.25 at 24 degrees C (75 degrees F) mean temperature, encased with a low permeability moisture barrier outer jacket, having a puncture resistance of not less than 50 Beach Units. Acoustic insertion loss shall not be less than 3 dB per 300 mm (foot) of straight duct, at 500 Hz, based on 150 mm (6 inch) duct, of 750 m/min (2500 fpm).

D. Application Criteria:

1. Temperature range: -18 to 93 degrees C (0 to 200 degrees F) internal.
2. Maximum working velocity: 1200 m/min (4000 feet per minute).
3. Minimum working pressure, inches of water gage: 2500 Pa (10 inches) positive, 500 Pa (2 inches) negative.

E. Duct Clamps: 100 percent nylon strap, 80 kg (175 pounds) minimum loop tensile strength manufactured for this purpose or stainless-steel strap with cadmium plated worm gear tightening device. Apply clamps with sealant and as approved for UL 181, Class 1 installation.

2.10 FLEXIBLE DUCT CONNECTIONS

Where duct connections are made to fans, air terminal units, and air handling units, install a non-combustible flexible connection of 822 g (29 ounce) neoprene coated fiberglass fabric approximately 150 mm (6 inches) wide. For connections exposed to sun and weather provide hypalon coating in lieu of neoprene. Burning characteristics shall conform to NFPA 90A. Securely fasten flexible connections to round ducts with stainless steel or zinc-coated iron draw bands with worm gear fastener. For rectangular connections, crimp fabric to sheet metal and fasten sheet metal to ducts by screws 50 mm (2 inches) on center. Fabric shall not be stressed other than by air pressure. Allow at least 25 mm (one inch) slack to ensure that no vibration is transmitted.

2.11 SOUND ATTENUATING UNITS

A. Casing, not less than 1.0 mm (20 gage) galvanized sheet steel, or 1.3 mm (18 gage) aluminum fitted with suitable flanges to make clean airtight connections to ductwork. Sound-absorbent material faced with glass fiber cloth and covered with not less than 0,6 mm (24 gage) or heavier galvanized perforated sheet steel, or 0.85 mm (22 gage) or heavier perforated aluminum. Perforations shall not exceed 4 mm

(5/32-inch) diameter, approximately 25 percent free area. Sound absorbent material shall be long glass fiber acoustic blanket meeting requirements of NFPA 90A.

B. Entire unit shall be completely air tight and free of vibration and buckling at internal static pressures up to 2000 Pa (8 inches W.G.) at operating velocities.

C. Pressure drop through each unit: Not to exceed indicated value at design air quantities indicated.

D. Submit complete independent laboratory test data showing pressure drop and acoustical performance.

E. Cap open ends of attenuators at factory with plastic, heavy duty paper, cardboard, or other appropriate material to prevent entrance of dirt, water, or any other foreign matter to inside of attenuator. Caps shall not be removed until attenuator is installed in duct system.

2.12 PREFABRICATED ROOF CURBS

Galvanized steel or extruded aluminum 300 mm (12 inches) above finish roof service, continuous welded corner seams, treated wood nailer, 40 mm (1-1/2 inch) thick, 48 kg/cubic meter (3 pound/cubic feet) density rigid mineral fiberboard insulation with metal liner, built-in can't strip (except for gypsum or tectum decks). For surface insulated roof deck, provide raised cant strip (recessed mounting flange) to start at the upper surface of the insulation. Curbs shall be constructed for pitched roof or ridge mounting as required to keep top of curb level.

2.13 FIRESTOPPING MATERIAL

Refer to Section 07 84 00, FIRESTOPPING.

2.14 SEISMIC RESTRAINT FOR DUCTWORK

Refer to Section 13 05 41, SEISMIC RESTRAINT REQUIREMENTS FOR NON-STRUCTURAL COMPONENTS.

2.15 DUCT MOUNTED THERMOMETER (AIR)

A. Stem Type Thermometers: ASTM E1, 7-inch scale, red appearing mercury, lens front tube, cast aluminum case with enamel finish and clear glass or polycarbonate window, brass stem, 2 percent of scale accuracy to ASTM E77 scale calibrated in degrees Fahrenheit.

B. Thermometer Supports:

1. Socket: Brass separable sockets for thermometer stems with or without extensions as required, and with cap and chain.
2. Flange: 3 inch outside diameter reversible flange, designed to fasten to sheet metal air ducts, with brass perforated stem.

2.16 DUCT MOUNTEDTEMPERATURE SENSOR (AIR)

Refer to Section 23 09 23, DIRECT-DIGITAL CONTROL SYSTEM FOR HVAC.

2.17 INSTRUMENT TEST FITTINGS

A. Manufactured type with a minimum 50 mm (two inch) length for insulated duct, and a minimum 25 mm (one inch) length for duct not insulated. Test hole shall have a flat gasket for rectangular ducts and a concave gasket for round ducts at the base, and a screw cap to prevent air leakage.

B. Provide instrument test holes at each duct or casing mounted temperature sensor or transmitter, and at entering and leaving side of each heating coil, cooling coil, and heat recovery unit.

2.18 LEAD COVERED DUCT

A. Sheet Lead: 3.1 mm (1/8 inch) thick, securely installed, free of waves, lumps or wrinkles and with as few joints as possible.

B. Joints shall be made to obtain X-ray absorption equivalent to adjacent sheet lead and finished smooth and neat.

2.19 ELECTROSTATIC SHIELDING

A. At the point of penetration of shielded rooms ducts shall be made electrically discontinuous by means of a flexible, nonconductive connection outside shielded room.

B. Metallic duct portion inside shielded room shall be electrically bonded to shielding.

PART 3 - EXECUTION

3.1 INSTALLATION

A. Comply with provisions of Section 23 05 11, COMMON WORK RESULTS FOR HVAC, particularly regarding coordination with other trades and work in existing buildings.

B. Fabricate and install ductwork and accessories in accordance with referenced SMACNA Standards:

1. Drawings show the general layout of ductwork and accessories but do not show all required fittings and offsets that may be necessary to connect ducts to equipment, boxes, diffusers, grilles, etc., and to coordinate with other trades. Fabricate ductwork based on field measurements. Provide all necessary fittings and offsets at no additional cost to the government. Coordinate with other trades for space available and relative location of HVAC equipment and accessories on ceiling grid. Duct sizes on the drawings are inside

dimensions which shall be altered by Contractor to other dimensions with the same air handling characteristics where necessary to avoid interferences and clearance difficulties.

2. Provide duct transitions, offsets and connections to dampers, coils, and other equipment in accordance with SMACNA Standards. Provide streamliner, when an obstruction cannot be avoided and must be taken in by a duct. Repair galvanized areas with galvanizing repair compound.
3. Provide bolted construction and tie-rod reinforcement in accordance with SMACNA Standards.
4. Construct casings, eliminators, and pipe penetrations in accordance with SMACNA Standards, Chapter 6. Design casing access doors to swing against air pressure so that pressure helps to maintain a tight seal.

C. Install duct hangers and supports in accordance with SMACNA Standards.

D. Install fire dampers, smoke dampers and combination fire/smoke dampers in accordance with the manufacturer's instructions to conform to the installation used for the rating test. Install fire dampers, smoke dampers and combination fire/smoke dampers at locations indicated and where ducts penetrate fire rated and/or smoke rated walls, shafts and where required by the Resident Engineer. Install with required perimeter mounting angles, sleeves, breakaway duct connections, corrosion resistant springs, bearings, bushings and hinges per UL and NFPA. Demonstrate re-setting of fire dampers and operation of smoke dampers to the Resident Engineer.

E. Seal openings around duct penetrations of floors and fire rated partitions with fire stop material as required by NFPA 90A.

F. Flexible duct installation: Refer to SMACNA Standards, Chapter 3. Ducts shall be continuous, single pieces not over 1.5 m (5 feet) long (NFPA 90A), as straight and short as feasible, adequately supported. Centerline radius of bends shall be not less than two duct diameters. Make connections with clamps as recommended by SMACNA. Clamp per SMACNA with one clamp on the core duct and one on the insulation jacket. Flexible ducts shall not penetrate floors, or any chase or partition designated as a fire or smoke barrier, including corridor partitions fire rated one hour or two hours. Support ducts SMACNA Standards.

G. Where diffusers, registers and grilles cannot be installed to avoid seeing inside the duct, paint the inside of the duct with flat black paint to reduce visibility.

H. Control Damper Installation:

1. Provide necessary blank-off plates required to install dampers that are smaller than duct size. Provide necessary transitions required to install dampers larger than duct size.
2. Assemble multiple sections dampers with required interconnecting linkage and extend required number of shafts through duct for external mounting of damper motors.
3. Provide necessary sheet metal baffle plates to eliminate stratification and provide air volumes specified. Locate baffles by experimentation, and affix and seal permanently in place, only after stratification problem has been eliminated.
4. Install all damper control/adjustment devices on stand-offs to allow complete coverage of insulation.

I. Air Flow Measuring Devices (AFMD): Install units with minimum straight run distances, upstream and downstream as recommended by the manufacturer.

J. Low Pressure Duct Liner: Install in accordance with SMACNA, Duct Liner Application Standard.

K. Protection and Cleaning: Adequately protect equipment and materials against physical damage. Place equipment in first class operating condition or return to source of supply for repair or replacement, as determined by Resident Engineer. Protect equipment and ducts during construction against entry of foreign matter to the inside and clean both inside and outside before operation and painting. When new ducts are connected to existing ductwork, clean both new and existing ductwork by mopping and vacuum cleaning inside and outside before operation.

3.2 DUCT LEAKAGE TESTS AND REPAIR

A. Ductwork leakage testing shall be performed by the Testing and Balancing Contractor directly contracted by the General Contractor and independent of the Sheet Metal Contractor.

B. Ductwork leakage testing shall be performed for the entire air distribution system (including all supply, return, exhaust and relief ductwork), section by section, including fans, coils and filter sections. Based upon satisfactory initial duct leakage test results,

the scope of the testing may be reduced by the Resident Engineer on ductwork constructed to the 500 Pa (2" WG) duct pressure classification. In no case shall the leakage testing of ductwork constructed above the 500 Pa (2" WG) duct pressure classification or ductwork located in shafts or other inaccessible areas be eliminated.

C. Test procedure, apparatus and report shall conform to SMACNA Leakage Test manual. The maximum leakage rate allowed is 4 percent of the design air flow rate.

D. All ductwork shall be leak tested first before enclosed in a shaft or covered in other inaccessible areas.

E. All tests shall be performed in the presence of the Resident Engineer and the Test and Balance agency. The Test and Balance agency shall measure and record duct leakage and report to the Resident Engineer and identify leakage source with excessive leakage.

F. If any portion of the duct system tested fails to meet the permissible leakage level, the Contractor shall rectify sealing of ductwork to bring it into compliance and shall retest it until acceptable leakage is demonstrated to the Resident Engineer.

G. All tests and necessary repairs shall be completed prior to insulation or concealment of ductwork.

H. Make sure all openings used for testing flow and temperatures by TAB Contractor are sealed properly.

3.3 DUCTWORK EXPOSED TO WIND VELOCITY

Provide additional support and bracing to all exposed ductwork installed on the roof or outside the building to withstand wind velocity of__290__km/h (_180mph).

3.4 TESTING, ADJUSTING AND BALANCING (TAB)

Refer to Section 23 05 93, TESTING, ADJUSTING, and BALANCING FOR HVAC.

3.5 OPERATING AND PERFORMANCE TESTS

Refer to Section 23 05 11, COMMON WORK RESULTS FOR HVAC.

- - - E N D - - -

SECTION 23 34 00
HVAC FANS

PART 1 - GENERAL

1.1 DESCRIPTION

A. Fans for heating, ventilating and air conditioning.

B. Product Definitions: AMCA Publication 99, Standard l-66.

1.2 RELATED WORK

A. Section 01 00 00, GENERAL REQUIREMENTS.

B. Section 01 33 23, SHOP DRAWINGS, PRODUCT DATA, and SAMPLES.

C. Section 13 05 41, SEISMIC RESTRAINT REQUIREMENTS FOR NON-STRUCTURAL COMPONENTS.

D. Section 23 05 11, COMMON WORK RESULTS FOR HVAC.

E. Section 23 05 12, GENERAL MOTOR REQUIREMENTS FOR HVAC and STEAM GENERATION EQUIPMENT.

F. Section 23 05 41, NOISE and VIBRATION CONTROL FOR HVAC PIPING and EQUIPMENT.

G. Section 23 05 93, TESTING, ADJUSTING, and BALANCING FOR HVAC.

H. Section 23 09 23, DIRECT-DIGITAL CONTROL SYSTEM FOR HVAC.

I. Examine all drawings and criteria sheets and all other Sections of the Specifications for requirements, which affect work under this Section whether or not such work is specifically mentioned in this Section.

1.3 QUALITY ASSURANCE

A. Refer to paragraph, QUALITY ASSURANCE, in Section 23 05 11, COMMON WORK RESULTS FOR HVAC.

B. Fans and power ventilators shall be listed in the current edition of AMCA 26l, and shall bear the AMCA performance seal.

C. Operating Limits for Centrifugal Fans: AMCA 99 (Class I, II, and III).

D. Fans and power ventilators shall comply with the following standards:

1. Testing and Rating: AMCA 2l0.

2. Sound Rating: AMCA 300.

E. Vibration Tolerance for Fans and Power Ventilators: Section 23 05 41, NOISE AND VIBRATION CONTROL FOR HVAC PIPING and EQUIPMENT.

F. Performance Criteria:

1. The fan schedule shall show the design air volume and static pressure. Select the fan motor HP by increasing the fan BHP by 10 percent to account for the drive losses and field conditions.

2. Select the fan operating point as follows:

a. Forward Curve and Axial Flow Fans: Right hand side of peak pressure point

b. Air Foil, Backward Inclined, or Tubular: At or near the peak static efficiency

G. Safety Criteria: Provide manufacturer's standard screen on fan inlet and discharge where exposed to operating and maintenance personnel.

H. Corrosion Protection:

1. Except for fans in fume hood exhaust service, all steel shall be mill-galvanized, or phosphatized and coated with minimum two coats, corrosion resistant enamel paint. Manufacturers paint and paint system shall meet the minimum specifications of: ASTM D1735 water fog; ASTM B117 salt spray; ASTM D3359 adhesion; and ASTM G152 and G153 for carbon arc light apparatus for exposure of non-metallic material.

2. Fans for general purpose fume hoods, or chemical hoods, and radioisotope hoods shall be constructed of materials compatible with the chemicals being transported in the air through the fan.

I. Spark resistant construction: If flammable gas, vapor or combustible dust is present in concentrations above 20% of the Lower Explosive Limit (LEL), the fan construction shall be as recommended by AMCA's Classification for Spark Resistant Construction. Drive set shall be comprised of non-static belts for use in an explosive.

1.4 SUBMITTALS

A. Submit in accordance with Section 01 33 23, SHOP DRAWINGS, PRODUCT DATA, and SAMPLES.

B. Manufacturers Literature and Data:

1. Fan sections, motors and drives.

2. Centrifugal fans, motors, drives, accessories and coatings.

a. In-line centrifugal fans.

b. Tubular Centrifugal Fans.

c. Up-blast kitchen hood exhaust fans.

d. Industrial fans.

e. Utility fans and vent sets.

3. Prefabricated roof curbs.

4. Power roof and wall ventilators.

5. Centrifugal ceiling fans.

6. Propeller fans.

7. Packaged hood make-up air units.

8. Vane axial fans.
9. Tube-axial fans.
10. Air curtain units.

C. Certified Sound power levels for each fan.

D. Motor ratings types, electrical characteristics and accessories.

E. Roof curbs.

F. Belt guards.

G. Maintenance and Operating manuals in accordance with Section 01 00 00, GENERAL REQUIREMENTS.

H. Certified fan performance curves for each fan showing cubic feet per minute (CFM) versus static pressure, efficiency, and horsepower for design point of operation.

1.5 APPLICABLE PUBLICATIONS

A. The publications listed below form a part of this specification to the extent referenced. The publications are referenced in the text by the basic designation only.

B. Air Movement and Control Association International, Inc. (AMCA):

99-2016.....Standards Handbook

210-2016.....Laboratory Methods of Testing Fans for Aerodynamic Performance Rating

261-2017.....Directory of Products Licensed to bear the AMCA Certified Ratings Seal - Published Annually

300-2014.....Reverberant Room Method for Sound Testing of Fans

C. American Society for Testing and Materials (ASTM):

B117-2018.....Standard Practice for Operating Salt Spray (Fog) Apparatus

D1735-2008.....Standard Practice for Testing Water Resistance of Coatings Using Water Fog Apparatus

D3359-2017.....Standard Test Methods for Measuring Adhesion by Tape Test

G152-2013.....Standard Practice for Operating Open Flame Carbon Arc Light Apparatus for Exposure of Non-Metallic Materials

G153-2013.....Standard Practice for Operating Enclosed Carbon Arc Light Apparatus for Exposure of Non-Metallic Materials

D. National Fire Protection Association (NFPA):

NFPA 96-2018.....Standard for Ventilation Control and Fire Protection of Commercial Cooking Operations

E. National Sanitation Foundation (NSF):

37-2017 .....Air Curtains for Entrance Ways in Food and Food Service Establishments

F. Underwriters Laboratories, Inc. (UL):

181-2013.....Factory Made Air Ducts and Air Connectors

1.6 EXTRA MATERIALS

A. Provide one additional set of belts for all belt-driven fans.

PART 2 - PRODUCTS

2.1 CENTRIFUGAL FANS

A. Standards and Performance Criteria: Refer to Paragraph, QUALITY ASSURANCE. Record factory vibration test results on the fan or furnish to the Contractor.

B. Fan arrangement, unless noted or approved otherwise:

1. DWDl fans: Arrangement 3.
2. SWSl fans: Arrangement l, 3, 9 or l0.

C. Construction: Wheel diameters and outlet areas shall be in accordance with AMCA standards.

1. Housing: Low carbon steel, arc welded throughout, braced and supported by structural channel or angle iron to prevent vibration or pulsation, flanged outlet, inlet fully streamlined. Provide lifting clips, and casing drain. Provide manufacturer's standard access door. Provide 12.5 mm (1/2 inches) wire mesh screens for fan inlets without duct connections.
2. Wheel: Steel plate with die formed blades welded or riveted in place, factory balanced statically and dynamically.
3. Shaft: Designed to operate at no more than 70 percent of the first critical speed at the top of the speed range of the fans class.
4. Bearings: Heavy duty ball or roller type sized to produce a Bl0 life of not less than 50,000 hours, and an average fatigue life of 200,000 hours. Extend filled lubrication tubes for interior bearings or ducted units to outside of housing.
5. Belts: Oil resistant, non-sparking and non-static.
6. Belt Drives: Factory installed with final alignment belt adjustment made after installation.

7. Motors and Fan Wheel Pulleys: Adjustable pitch for use with motors through 15HP, fixed pitch for use with motors larger than 15HP. Select pulleys so that pitch adjustment is at the middle of the adjustment range at fan design conditions.
8. Motor, adjustable motor base, drive and guard: Furnish from factory with fan. Refer to Section 23 05 11, COMMON WORK RESULTS FOR HVAC for specifications. Provide protective sheet metal enclosure for fans located outdoors.
9. Furnish variable speed fan motor controllers where shown on the drawings. Refer to Section 23 05 11, COMMON WORK RESULTS FOR HVAC for controller/motor combination requirements.

D. In-line Centrifugal Fans: In addition to the requirements of paragraphs A and 2.2.C3 thru 2.2.C9, provide minimum 18 Gauge galvanized steel housing with inlet and outlet flanges, backward inclined aluminum centrifugal fan wheel, bolted access door and supports as required. Motors shall be factory pre-wired to an external junction box. Provide factory wired disconnect switch.

E. Tubular Centrifugal Fans: In addition to the requirements of paragraphs A and 2.2.C2 thru 2.2.C9 provide;
1. Housings: Hot rolled steel, one-piece design, incorporating integral guide vanes, motor mounts, bolted access hatch and end flanges. Provide spun inlet bell and screen for unducted inlet and screen for unducted outlet. Provide welded steel, flanged inlet and outlet cones for ducted connection. Provide mounting legs or suspension brackets as required for support. Guide vanes shall straighten the discharge air pattern to provide linear flow.

F. Industrial Fans: Use where scheduled or in lieu of centrifugal fans for low volume high static service. Construction specifications paragraphs A and C for centrifugal fans shall apply. Provide material handling flat blade type fan wheel.

G. Utility Fans, Vent Sets and Small Capacity Fans: Class l design, arc welded housing, spun intake cone. Applicable construction specification, paragraphs A and C, for centrifugal fans shall apply for wheel diameters 300 mm (l2 inches) and larger. Requirement for AMCA seal is waived for wheel diameters less than 300 mm (l2 inches) and housings may be cast iron.

H. Spark Resistant/Explosion Proof Fans: If flammable gas, vapor or combustible dust is present in concentrations above 20% of the Lower

Explosive Limit (LEL), provide AMCA construction option: A, B or C as indicated. Drive set shall be comprised of non-static belts for use in an explosive atmosphere. Motor shall be explosion proof type if located in air stream.

2.2 POWER ROOF VENTILATOR

A. Standards and Performance Criteria: Refer to Paragraph, QUALITY ASSURANCE.

B. Type: Centrifugal fan, backward inclined blades. Provide down-blast or up-blast type as indicated.

C. Construction: Steel or aluminum, completely weatherproof, for curb mounting, exhaust cowl or entire drive assembly readily removable for servicing, aluminum bird screen on discharge, UL approved safety disconnect switch, conduit for wiring, vibration isolators for wheel, motor and drive assembly. Provide self acting back draft damper. Provide electric motor operated damper where indicated.

D. Motor and Drive: Refer to Section 23 05 11, COMMON WORK RESULTS FOR HVAC. Bearings shall be pillow block ball type with a minimum L-50 life of 200,000 hours. Motor shall be located out of air stream.

E. Prefabricated Roof Curb: As specified in paragraph 2.3 of this section.

F. Up-blast Type: Top discharge exhauster, motor out of air stream. For kitchen hood exhaust applications, provide grease trough on base and threaded drain. The mounting height of the kitchen up-blast exhaust fan shall be in compliance with NFPA 96. (Provide vented curb extension if required to maintain required clearances.)

PART 3 - EXECUTION

3.1 INSTALLATION

A. Install fan, motor and drive in accordance with manufacturer's instructions.

B. Align fan and motor sheaves to allow belts to run true and straight.

C. Bolt equipment to curbs with galvanized lag bolts.

D. Install vibration control devices as shown on drawings and specified in Section 23 05 41, NOISE and VIBRATION CONTROL FOR HVAC PIPING and EQUIPMENT.

3.2 PRE-OPERATION MAINTENANCE

A. Lubricate bearings, pulleys, belts and other moving parts with manufacturer recommended lubricants.

B. Rotate impeller by hand and check for shifting during shipment and check all bolts, collars, and other parts for tightness.

C. Clean fan interiors to remove foreign material and construction dirt and dust.

3.3 START-UP AND INSTRUCTIONS

A. Verify operation of motor, drive system and fan wheel according to the drawings and specifications.

B. Check vibration and correct as necessary for air balance work.

C. After air balancing is complete and permanent sheaves are in place perform necessary field mechanical balancing to meet vibration tolerance in Section 23 05 41, NOISE and VIBRATION CONTROL FOR HVAC PIPING and EQUIPMENT.

- - - E N D - - -

SECTION 23 40 02.1
WATER COOLED CHILLERS

PRO-FORMA SUBMITTAL DOCUMENTS

FOR

PERFORMANCE OF WATER COOLED CHILLERS @12dT

(ATTACHED)

- - - E N D - - -

Unit Features

Chiller Model	Application Type	Total Power	Refrigerant	Line Volt	Line Frequency	Starter Type
HDWA 300	Standard cooling	134.8 kW	Full Factory Refrigerant Charge (R-513A)	460. V	60. Hz	VFD

Unit Overview

Cooling Capacity	250.0 tons
Full Load Cooling Efficiency	0.5393 kW/ton
Cooling COP	6.521 COP (kW/kW)
Tracer Controls	BACnet
Compressor	300
Orifice	400
NPLV.IP	0.3315 kW/ton
Rated NPLV.IP	0.3315 kW/ton



Selection Tolerances

Selection Tolerance	AHRI Tolerance

Shell Information

	Evaporator	Condenser
	Fluid Temperature	
Entering	56.00 F	85.00 F
Leaving	44.00 F	94.28 F
	Fluid Properties	
Fluid Type	water	water
Fluid Concentration	0.00 %	0.00 %
Fouling Factor	0.000100 hr-sq ft-deg F/ Btu	0.000250 hr-sq ft-deg F/ Btu
	Flow Rate	
Design Flow	497.8 gpm	750.0 gpm
Min Flow	261.0 gpm	591.2 gpm
Max Flow	1488 gpm	2168 gpm
	Fluid Pressure Drop	
PD at Design Flow	6.36 ft H2O	6.42 ft H2O
PD at Min Flow	1.55 ft H2O	4.23 ft H2O
PD at Max Flow	57.7 ft H2O	42.6 ft H2O

	Evaporator	Condenser
	Construction Features	
Shell Size	040A	040A
Bundle Size	C	A
Tube Type	TMCU	TECU
Tube Thickness	0.025"	0.025"
Connection Type	Victaulic connection	Victaulic connection
Water box type	Non-marine	Non-marine
Water box pressure	150 psig	150 psig
Wbox Arrangement	Evap in LH end - evap out LH end	Cond in RH end - cond out RH end
Flow Proving	Thermal dispersion flow swith (IFM)	Thermal dispersion flow switch (IFM)
Number of Passes	Two pass evap water box	Two pass cond water box
Fluid Volume	11.54 cu ft	15.33 cu ft

Unit Electrical

Low Voltage AFD type	Unit mounted low voltage AFD	**Min Circuit Ampacity**	243.00 A
AFD frame size	238 max RLA	**Max Overcurrent Protection**	400.00 A
Harmonic filter option	No	**Primary RLA**	195.60 A
Motor	441	**Motor Locked Rotor Amps**	1000.00 A
Total Power	134.8 kW		

Design and Physical Information

Operating Weight	15136.0 lb	**Shipping Weight - No Charge**	12664.0 lb	**Refrigerant charge**	800.0 lb
Agency Listing	U.L. / CUL listed	**Shipping Weight - Charge**	13104.0 lb	**Cond Shell Construction**	ASME condenser construction
AFD Heat Rejected to ambient	7.188 MBh	**Chiller Heat Rejected to ambient**	2.302 MBh	**Anticipated Sound at AHRI Conditions**	80. dBA

Information for AHRI and ASHRAE Projects

AHRI 550/590 2015 classification	Certified
ASHRAE 90.1-2013	Complies
ASHRAE 90.1-2016	Complies
ASHRAE 90.1-2019	Complies
ASHRAE 90.1-2022	Complies

Certified in accordance with the AHRI Water-Cooled Water-Chilling and Heat Pump Water-Heating Packages Certification Program, which is based on AHRI Standard 550/590 (I-P) and AHRI Standard 551/591 (SI). Certified units may be found in the AHRI Directory at www.ahridirectory.org.

Warranty

Labor 1st year	1st year labor warranty whole unit

Information for LEED Projects

Refrigeration capacity	250.0 tons	**Total power**	134.8 kW
Refrigerant charge	800.0 lb	**NPLV.IP**	0.3315 kW/ton
		Rated NPLV.IP	0.3315 kW/ton

The U.S. Green Building Council's LEED® green building program is the preeminent program for the design, construction, maintenance and operations of high-performance green buildings. It provides independent, third-party verification that a building project meets the highest green building and performance measures.

Partload Information

IPLV.IP 0.3295 kW/ton

% Load %	Cooling Capacity tons	Evap LWT F	Evap FR gpm	Evap EWT F	Evap PD ft H2O	Cond EWT F	Cond FR gpm	Cond LWT F	Cond PD ft H2O	kW kW	Amps A	Cooling Eff kW/ton
100	250.0	44.00	597.2	54.00	9.32	85.00	748.4	94.30	6.39	134.3	195.60	0.0000
75	187.5	44.00	597.2	51.50	9.31	75.00	748.4	81.72	6.62	74.53	112.30	0.3975
50	125.0	44.00	597.2	49.00	9.29	65.00	748.4	69.33	6.83	35.30	57.00	0.2824
25	62.50	44.00	597.2	46.50	9.27	65.00	748.4	67.19	6.85	20.52	36.30	0.3283

AHRI Relief at 5% interval

% Load %	Cooling Capacity tons	Evap LWT F	Evap FR gpm	Evap EWT F	Evap PD ft H2O	Cond EWT F	Cond FR gpm	Cond LWT F	Cond PD ft H2O	kW kW	Amps A	Cooling Eff kW/ton
100	250.0	44.00	497.8	56.00	6.36	85.00	750.0	94.28	6.42	134.8	195.60	0.5393
95	237.5	44.00	497.8	55.40	6.36	83.00	750.0	91.75	6.46	120.9	176.30	0.5092
90	225.0	44.00	497.8	54.80	6.35	81.00	750.0	89.22	6.51	108.0	158.40	0.4802
85	212.5	44.00	497.8	54.20	6.35	79.00	750.0	86.71	6.55	96.06	141.80	0.4520
80	200.0	44.00	497.8	53.60	6.34	77.00	750.0	84.20	6.60	84.97	126.30	0.4249
75	187.5	44.00	497.8	53.00	6.34	75.00	750.0	81.70	6.64	74.88	112.30	0.3994
70	175.0	44.00	497.8	52.40	6.33	73.00	750.0	79.21	6.69	65.66	99.40	0.3752
65	162.5	44.00	497.8	51.80	6.33	71.00	750.0	76.73	6.73	57.10	87.40	0.3514
60	150.0	44.00	497.8	51.20	6.32	69.00	750.0	74.25	6.77	49.19	76.30	0.3279
55	137.5	44.00	497.8	50.60	6.32	67.00	750.0	71.78	6.81	41.97	66.10	0.3053
50	125.0	44.00	497.8	50.00	6.32	65.00	750.0	69.32	6.85	35.50	57.00	0.2840
45	112.5	44.00	497.8	49.40	6.31	65.00	750.0	68.89	6.86	32.17	52.30	0.2859
40	100.0	44.00	497.8	48.80	6.31	65.00	750.0	68.46	6.86	29.09	48.00	0.2909
35	87.50	44.00	497.8	48.20	6.30	65.00	750.0	68.04	6.87	26.24	44.00	0.2999
30	75.00	44.00	497.8	47.60	6.30	65.00	750.0	67.61	6.88	23.46	40.10	0.3128
25	62.50	44.00	497.8	47.00	6.29	65.00	750.0	67.19	6.88	20.72	36.40	0.3316
20	50.00	44.00	497.8	46.40	6.28	65.00	750.0	66.77	6.89	19.79	33.60	0.3958
17	42.50	44.00	497.8	46.04	6.28	65.00	750.0	66.52	6.89	18.58	31.90	0.4372

Constant Condenser at 5% interval

% Load %	Cooling Capacity tons	Evap LWT F	Evap FR gpm	Evap EWT F	Evap PD ft H2O	Cond EWT F	Cond FR gpm	Cond LWT F	Cond PD ft H2O	kW kW	Amps A	Cooling Eff kW/ton
100	250.0	44.00	497.8	56.00	6.36	85.00	750.0	94.28	6.42	134.8	195.60	0.5393
95	237.5	44.00	497.8	55.40	6.36	85.00	750.0	93.80	6.42	126.2	183.70	0.5313
90	225.0	44.00	497.8	54.80	6.35	85.00	750.0	93.32	6.43	117.9	172.30	0.5239
85	212.5	44.00	497.8	54.20	6.35	85.00	750.0	92.85	6.44	110.0	161.50	0.5175
80	200.0	44.00	497.8	53.60	6.34	85.00	750.0	92.38	6.45	102.5	151.20	0.5124
75	187.5	44.00	497.8	53.00	6.34	85.00	750.0	91.91	6.45	95.36	141.40	0.5086
70	175.0	44.00	497.8	52.40	6.33	85.00	750.0	91.45	6.46	88.63	132.20	0.5065
65	162.5	44.00	497.8	51.80	6.33	85.00	750.0	90.99	6.47	82.37	123.60	0.5069
60	150.0	44.00	497.8	51.20	6.32	85.00	750.0	90.53	6.47	76.43	115.40	0.5095
55	137.5	44.00	497.8	50.60	6.32	85.00	750.0	90.08	6.48	70.71	107.50	0.5142
50	125.0	44.00	497.8	50.00	6.32	85.00	750.0	89.63	6.49	65.54	100.40	0.5243
45	112.5	44.00	497.8	49.40	6.31	85.00	750.0	89.19	6.50	60.95	94.00	0.5418
40	100.0	44.00	497.8	48.80	6.31	85.00	750.0	88.75	6.50	56.85	88.40	0.5685
35	87.50	44.00	497.8	48.20	6.30	85.00	750.0	88.29	6.51	51.05	80.30	0.5834
30	75.00	44.00	497.8	47.60	6.30	85.00	750.0	87.84	6.52	45.13	72.00	0.6017
25	62.50	44.00	497.8	47.00	6.29	85.00	750.0	87.58	6.52	59.66	94.10	0.9545
20	50.00	44.00	497.8	46.40	6.28	85.00	750.0	87.14	6.53	58.40	88.10	1.168

Regulatory Compliance



(1) Certified in accordance with the AHRI Water-Cooled Water-Chilling and Heat Pump Water-Heating Packages Certification Program, which is based on AHRI Standard 550/590 (I-P) and AHRI Standard 551/591 (SI). Certified units may be found in the AHRI Directory at www.ahridirectory.org

(2) Unit is certified in accordance with EN Standards 14511 and 14825 Standard Rating Conditions.

Trane Select Assist Version Number:	55292.00 Each
Data Generation Date:	2/27/2025

Model HDWA
Nominal tons 300

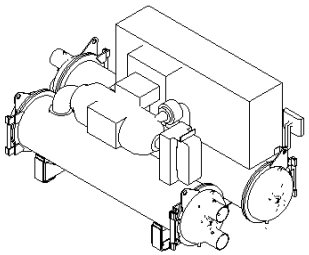

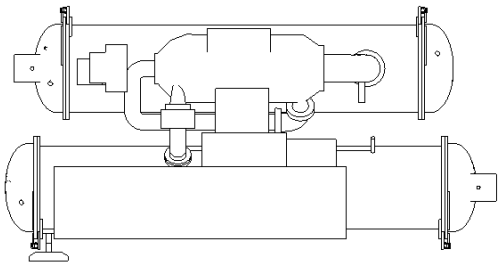

TOP VIEW

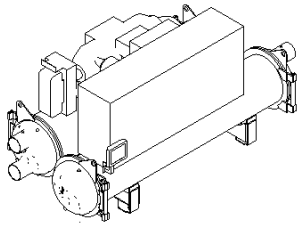

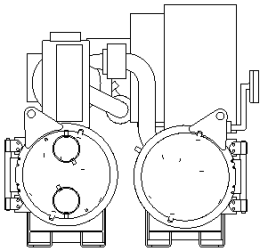

LEFT SIDE VIEW

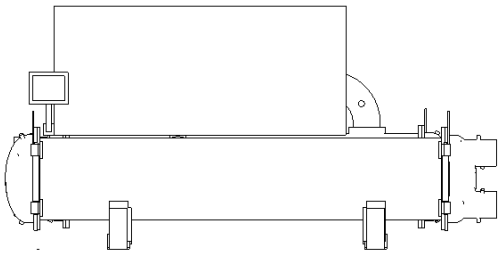

FRONT VIEW

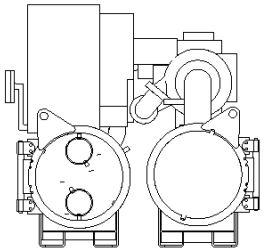

RIGHT SIDE VIEW

CUSTOMER NOTES:

GRAPHICS ON SUBMITTAL ARE SIMPLIFIED TO SHOW MAJOR ENVELOPE COMPONENTS.
UNIT STRUCTURE AND SUBCOMPONENTS MAY BE REMOVED FOR CLARITY.

UNLESS OTHERWISE SPECIFIED DIMENSIONAL TOLERANCE +/-1/2".
COOLING COND CONNS ARE STRAIGHT OUT THE END OF THE WATER BOX.
WATER BOX DRAIN AND VENT LOCATIONS ARE SHOWN ON THE WATER BOX END PLATES.

SHELL TYPE	CONN DIA	CONN TYPE	FLOW DIRECTION
EVAPORATOR	8"	VICTAULIC	IN BOTTOM OUT TOP
CONDENSER	8"	VICTAULIC	IN BOTTOM OUT TOP

Model HDWA
Nominal tons 300

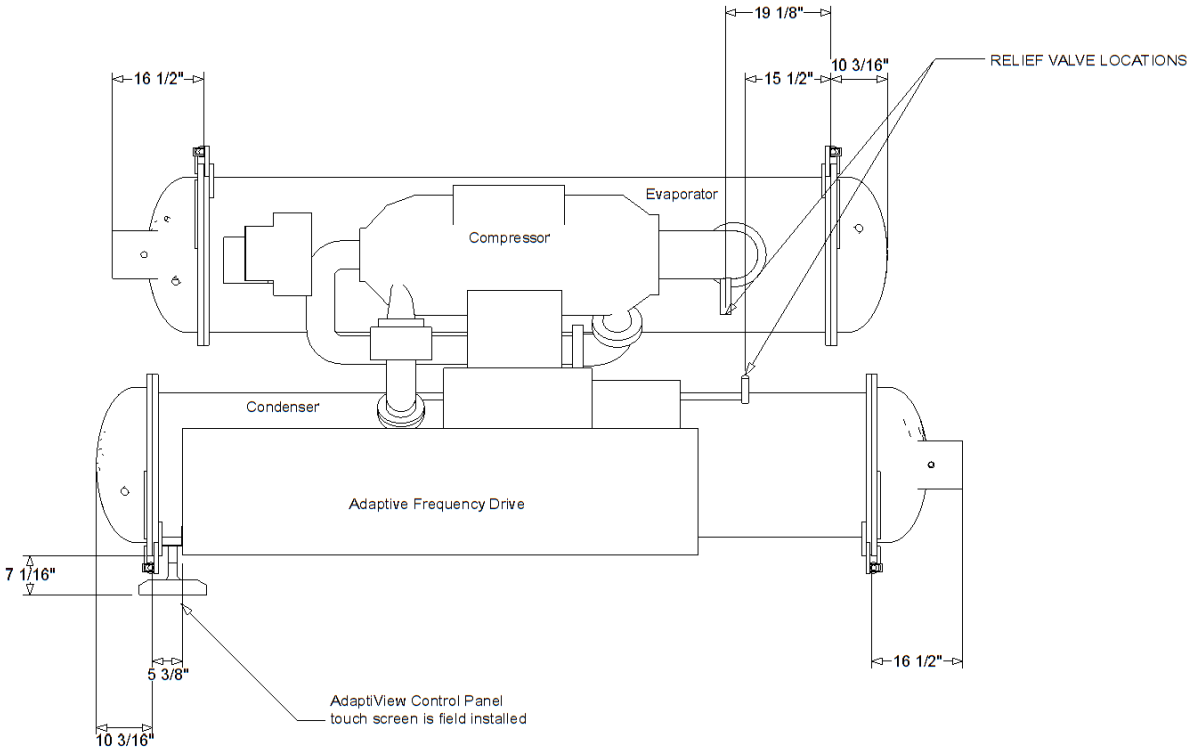

TOP VIEW

CUSTOMER NOTES:

GRAPHICS ON SUBMITTAL ARE SIMPLIFIED TO SHOW MAJOR ENVELOPE COMPONENTS.
UNIT STRUCTURE AND SUBCOMPONENTS MAY BE REMOVED FOR CLARITY.

UNLESS OTHERWISE SPECIFIED DIMENSIONAL TOLERANCE +/-1/2".
COOLING COND CONNS ARE STRAIGHT OUT THE END OF THE WATER BOX.
WATER BOX DRAIN AND VENT LOCATIONS ARE SHOWN ON THE WATER BOX END PLATES.

SHELL TYPE	CONN DIA	CONN TYPE	FLOW DIRECTION
EVAPORATOR	8"	VICTAULIC	IN BOTTOM OUT TOP
CONDENSER	8"	VICTAULIC	IN BOTTOM OUT TOP

Model HDWA
Nominal tons 300

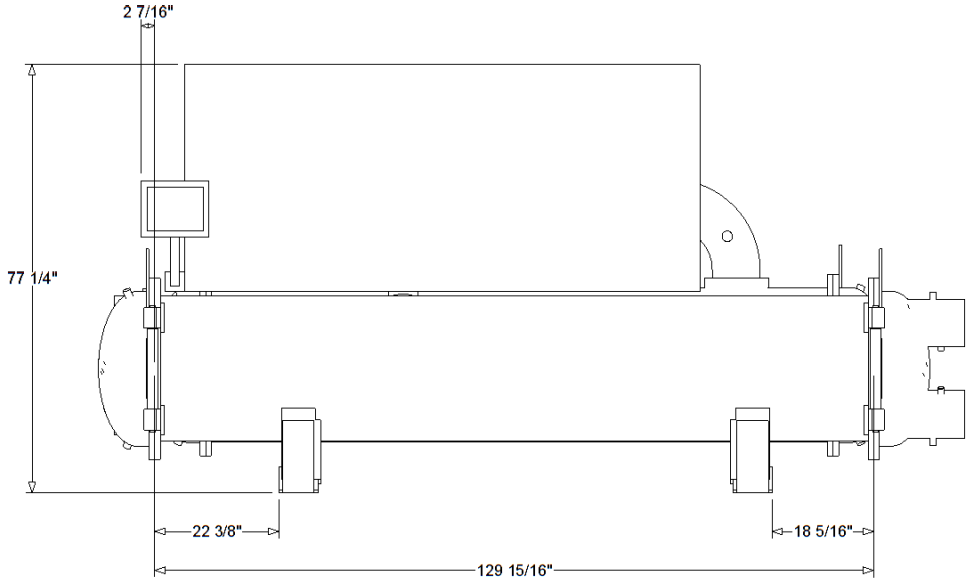

FRONT VIEW

CUSTOMER NOTES:

GRAPHICS ON SUBMITTAL ARE SIMPLIFIED TO SHOW MAJOR ENVELOPE COMPONENTS.
UNIT STRUCTURE AND SUBCOMPONENTS MAY BE REMOVED FOR CLARITY.

UNLESS OTHERWISE SPECIFIED DIMENSIONAL TOLERANCE +/-1/2".
COOLING COND CONNS ARE STRAIGHT OUT THE END OF THE WATER BOX.
WATER BOX DRAIN AND VENT LOCATIONS ARE SHOWN ON THE WATER BOX END PLATES.

SHELL TYPE	CONN DIA	CONN TYPE	FLOW DIRECTION
EVAPORATOR	8"	VICTAULIC	IN BOTTOM OUT TOP
CONDENSER	8"	VICTAULIC	IN BOTTOM OUT TOP

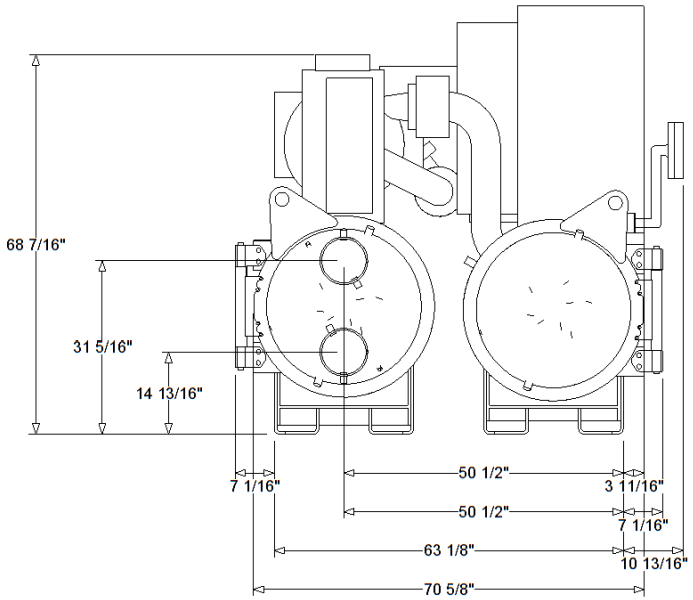

LEFT SIDE VIEW

CUSTOMER NOTES:

GRAPHICS ON SUBMITTAL ARE SIMPLIFIED TO SHOW MAJOR ENVELOPE COMPONENTS.
UNIT STRUCTURE AND SUBCOMPONENTS MAY BE REMOVED FOR CLARITY.

UNLESS OTHERWISE SPECIFIED DIMENSIONAL TOLERANCE +/-1/2".
COOLING COND CONNS ARE STRAIGHT OUT THE END OF THE WATER BOX.
WATER BOX DRAIN AND VENT LOCATIONS ARE SHOWN ON THE WATER BOX END PLATES.

SHELL TYPE	CONN DIA	CONN TYPE	FLOW DIRECTION
EVAPORATOR	8"	VICTAULIC	IN BOTTOM OUT TOP
CONDENSER	8"	VICTAULIC	IN BOTTOM OUT TOP

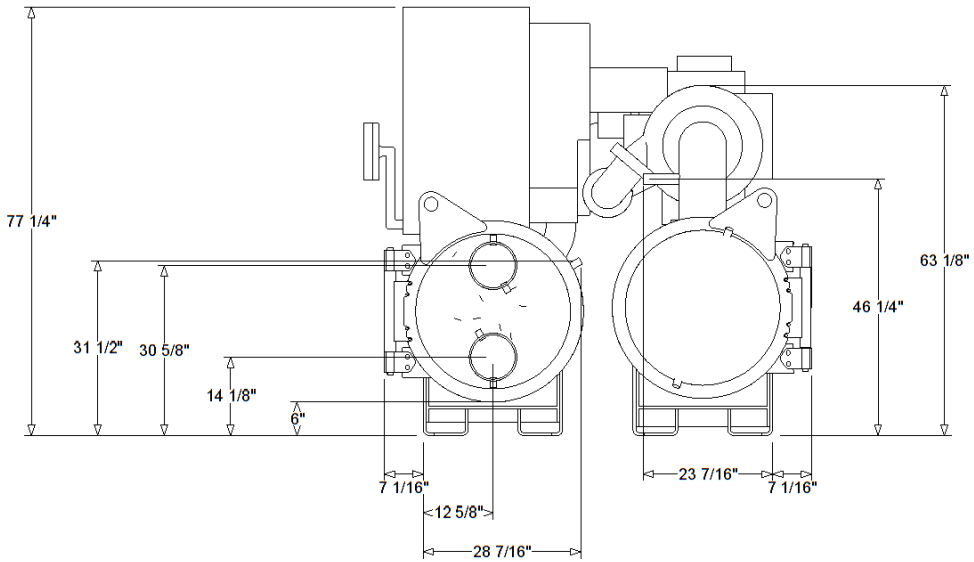

RIGHT SIDE VIEW

CUSTOMER NOTES:

GRAPHICS ON SUBMITTAL ARE SIMPLIFIED TO SHOW MAJOR ENVELOPE COMPONENTS.
UNIT STRUCTURE AND SUBCOMPONENTS MAY BE REMOVED FOR CLARITY.

UNLESS OTHERWISE SPECIFIED DIMENSIONAL TOLERANCE +/-1/2".
COOLING COND CONNS ARE STRAIGHT OUT THE END OF THE WATER BOX.
WATER BOX DRAIN AND VENT LOCATIONS ARE SHOWN ON THE WATER BOX END PLATES.

SHELL TYPE	CONN DIA	CONN TYPE	FLOW DIRECTION
EVAPORATOR	8"	VICTAULIC	IN BOTTOM OUT TOP
CONDENSER	8"	VICTAULIC	IN BOTTOM OUT TOP

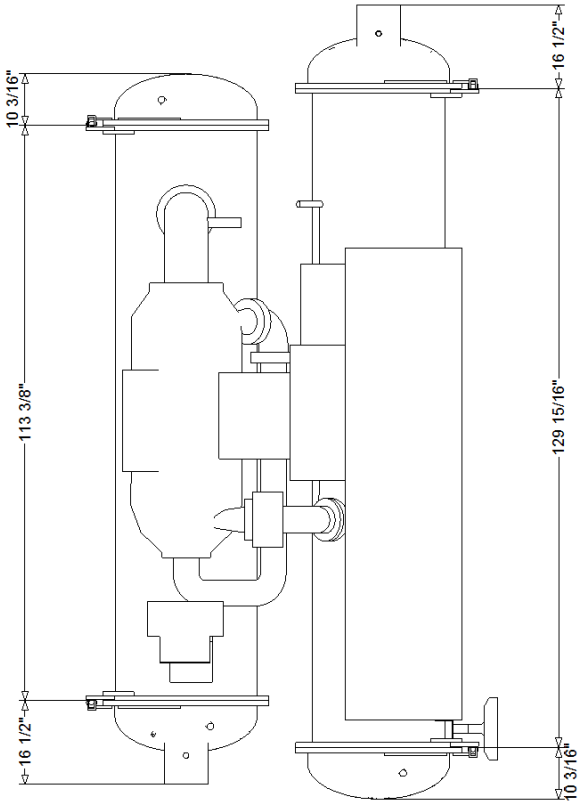

TOP VIEW

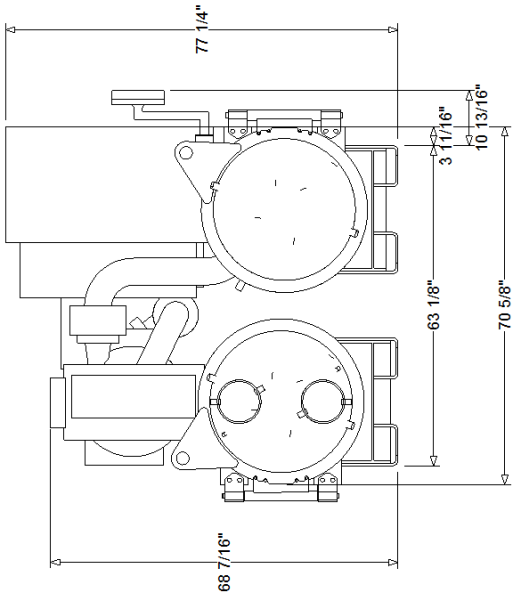

LEFT SIDE VIEW

SHIPPING WEIGHT **	12,664.0 lb
OPERATING WEIGHT	15,136.0 lb
COMPRESSOR SIZE	300
EVAPORATOR SIZE	040A
EVAPORATOR WATERPASS	2
EVAPORATOR WATERBOX ARRANGEMENT	LELE
CONDENSER SIZE	040A
CONDENSER WATERPASS	2
CONDENSER WATERBOX ARRANGEMENT	RERE

* ALL PUBLISHED WEIGHTS ACCURATE TO +/- 10 %
** SHIPPING WEIGHT INCLUDES REFRIGERANT. IF ORDERED WITHOUT, CONSULT PRODUCT SUPPORT FOR DRY SHIP WEIGHT.

⚠ WARNING

1. HEAVY OBJECTS!
   DO NOT USE CABLES (CHAINS OR SLINGS) EXCEPT AS SHOWN. EACH OF THE CABLES (CHAINS OR SLINGS) USED TO LIFT THE UNIT MUST BE CAPABLE OF SUPPORTING THE ENTIRE WEIGHT OF THE UNIT. LIFTING CABLES (CHAINS OR SLINGS) MAY NOT BE OF THE SAME LENGTH. ADJUST AS NECESSARY FOR EVEN LEVELSINGLE POINT LIFT. OTHER LIFTING ARRANGEMENTS MAY CAUSE EQUIPMENT OR PROPERTY-ONLY DAMAGE. FAILURE TO PROPERLY LIFT UNIT MAY RESULT IN DEATH OR SERIOUS INJURY. SEE DETAILS BELOW.
2. IMPROPER UNIT LIFT!
   TEST LIFT UNIT APPROXIMATELY 12 INCHES TO VERIFY PROPER CENTER OF GRAVITY LIFT POINT. TO AVOID DROPPING OF UNIT, REPOSITION LIFTING POINT IF UNIT IS NOT LEVEL. FAILURE TO PROPERLY LIFT UNIT COULD RESULT IN DEATH OR SERIOUS INJURY OR POSSIBLE EQUIPMENT OR PROPERTY-ONLY DAMAGE.
3. ATTACH SAFETY CHAIN OR CABLE AS SHOWN WITHOUT TENSION, NOT AS A LIFTING CHAIN OR CABLE, BUT TO PREVENT THE UNIT FROM ROLLING.
4. DO NOT FORKLIFT THE UNIT TO MOVE OR LIFT.
5. ONLY USE IDENTIFIED LIFTING HOLES PROVIDED ON CHILLER TO ATTACH CABLES (CHAINS OR SLINGS).
6. 36" (900 MM) RECOMMENDED CLEARANCE ABOVE HIGHEST POINT OF COMPRESSOR.
7 FOLLOW NEC SECTION 110 AND OTHER APPLICABLE LOCAL CODES FOR CLEARANCES IN FRONT OF ELECTRICAL ENCLOSURES.
8. SPECIFIC SHIPPING AND OPERATING WEIGHTS OF THE SUBMITTED CHILLER ARE PROVIDED IF THE CENTRIFUGAL CHILLER SELECTION WAS ENTERED IN TOPSS. CONTACT YOUR LOCAL TRANE SALES ENGINEER IF THIS DATA IS REQUIRED.

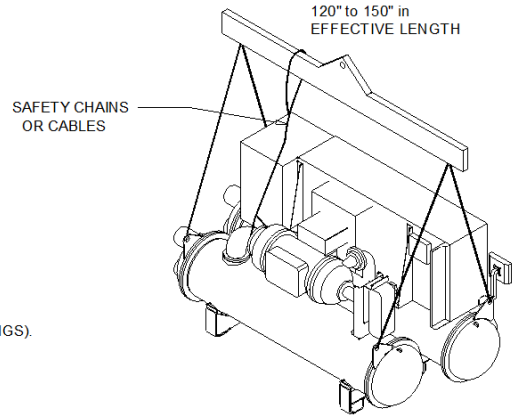

(SEE NOTE 8 ABOVE)	
MAXIMUM SHIPPING	12,664.0 lb
MAXIMUM OPERATING	15,136.0 lb

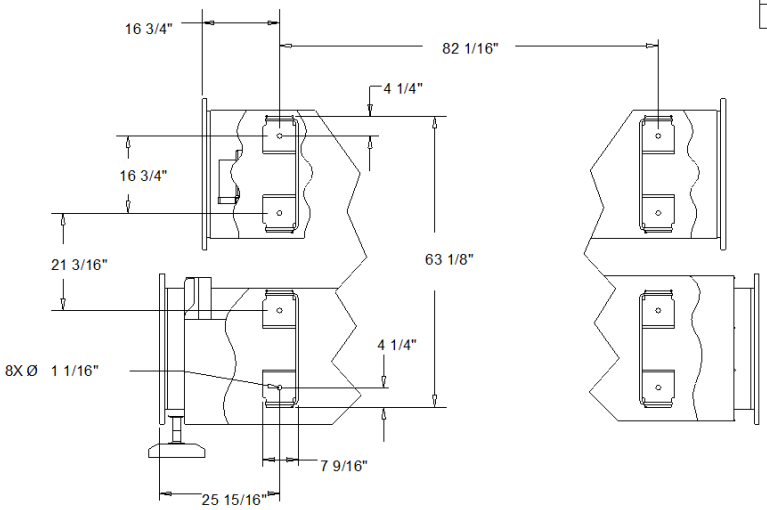

HOLE DETAILS
TOP VIEW

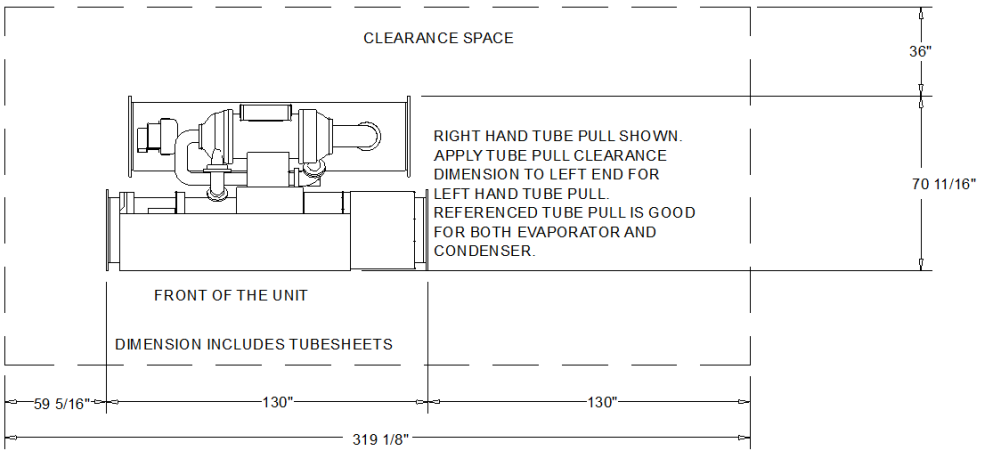

WEIGHTS AND CENTER OF GRAVITY

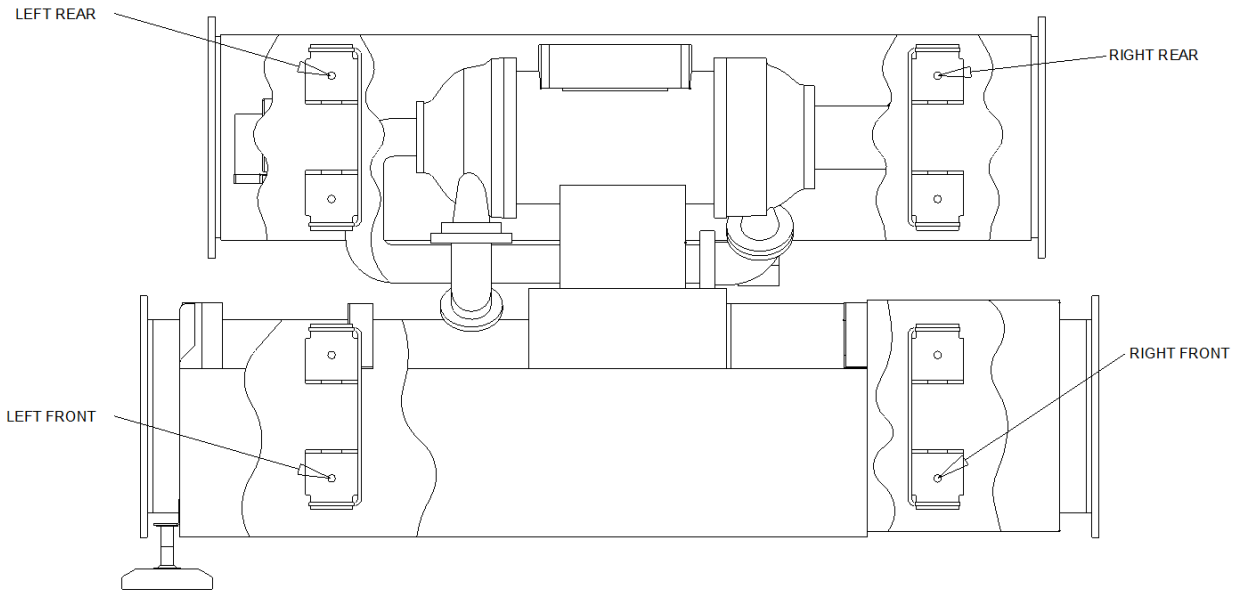

COMPONENT	WEIGHT*
COMPRESSOR WEIGHT	2,735.0 lb
MOTOR WEIGHT	327.0 lb
DRIVE WEIGHT	1,618.0 lb
SUCTION ELBOW WEIGHT	111.0 lb
ECONOMIZER WEIGHT	187.0 lb
EVAPORATOR WEIGHT	2,693.0 lb
EVAPORATOR WATERBOXES WEIGHT	398.0 lb
CONDENSER WEIGHT	3,494.0 lb
CONDENSER WATERBOXES WEIGHT	363.0 lb
MISCELLANEOUS WEIGHT	385.0 lb

UNIT CENTER OF GRAVITY	
CG X (DIMENSION TOWARDS FRONT)	31.000 in
CG Y (HEIGHT DIMENSION FROM FLOOR)	33.000 in
CG Z (DIMENSION FROM RIGHT TO LEFT)	46.000 in

RIGHT FRONT MOUNTING HOLE
BOTTOM OF THIS HOLE IS 0,0,0 POINT
FOR CENTER OF GRAVITY DIMENSIONS

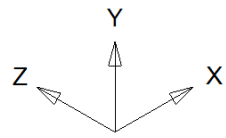

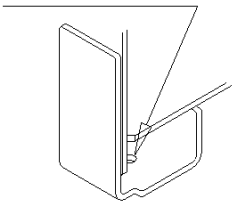

WEIGHTS	
SHIPPING **	OPERATING
12,664.0 lb	15,136.0 lb

NAMEPLATE PRODUCT DESCRIPTION:

MODL	HDWA	VOLT	460	PTON	250.00 tons	NTON	300
EVTM	TMCU	CDTM	TECU	CPKW	441	IMP1	7.598
IMP2	6.535	CDBS	A	EVSZ	040A	EVBS	C
						CDSZ	040A

* ALL PUBLISHED WEIGHTS ACCURATE TO +/- 10 %

** SHIPPING WEIGHT INCLUDES REFRIGERANT. IF ORDERED WITHOUT, CONSULT PRODUCT SUPPORT FOR DRY SHIP WEIGHT.

ADAPTIVE FREQUENCY DRIVE

MAX RLA	BREAKER AIC AMPS	SHORT CIRCUIT WITHSTAND RATINGS (RMS SYMETRICAL AMPS)	LINE CONNECTION LUGS ADAPTIVE FREQUENCY DRIVE	TOTAL DRIVE WEIGHT MINUS SHIPPING PALLET
238	65000	65000	(2) 3/0-250 MCM	1,618.0 lb

THE NON-FUSED DISCONNECT OR CIRCUIT BREAKER IS DESIGNED FOR USE AS A SERVICE DISCONNECT ONLY.

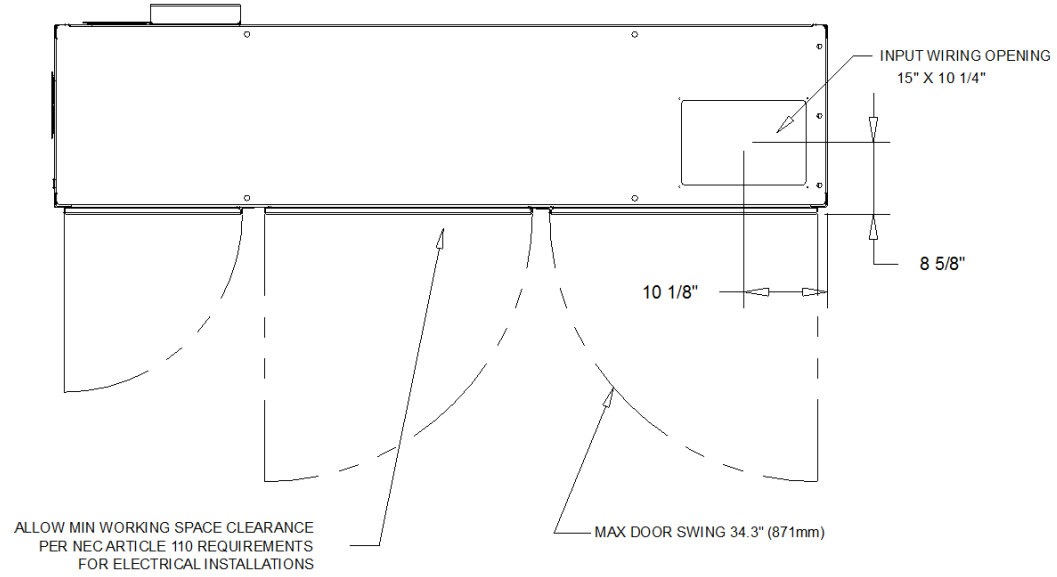

TOP VIEW

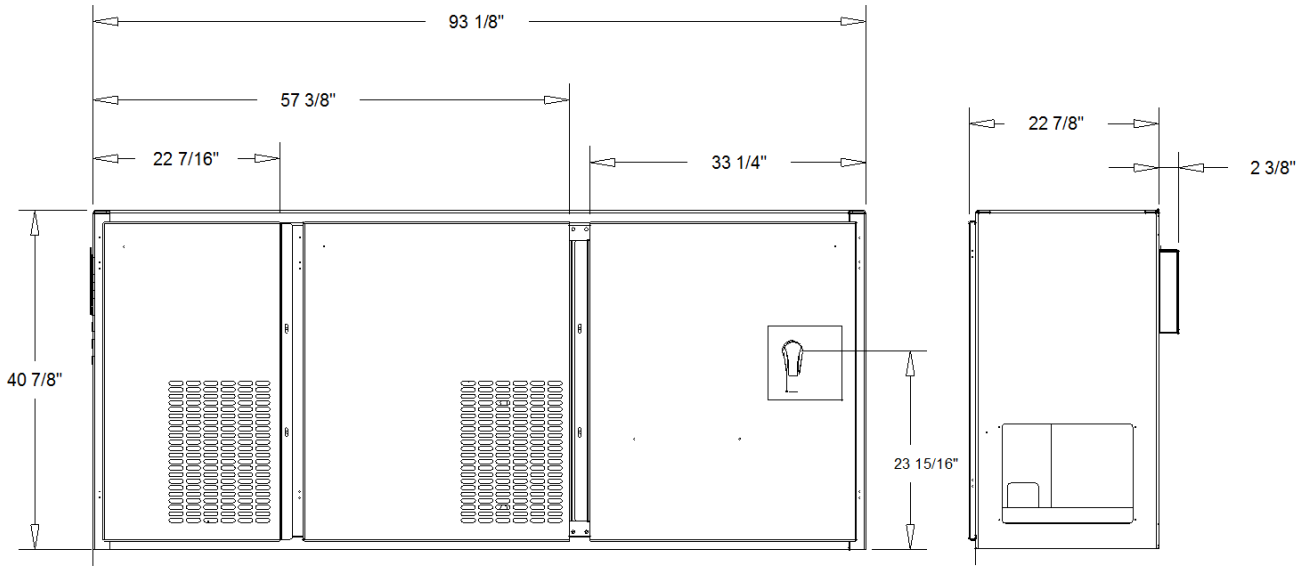

FRONT ELEVATION

RIGHT SIDE ELEVATION

HINGE SWING DETAIL DRAWING

ALL VIEWS ON THIS PAGE ARE TOP VIEWS

DO NOT INSTALL PIPING OR ANY NON-REMOVABLE HARDWARE IN FRONT OF HINGED WATERBOXES/COVERS OR ANY ATTACHED BRACKETS AND HINGES

LEFT END OF COOLING CONDENSER

LEFT HAND RETURN BOX AND HINGE SWING

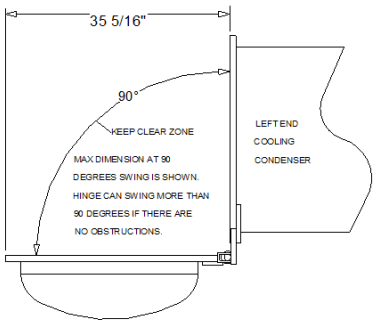

RIGHT END OF COOLING CONDENSER

RIGHT HAND NMAR WATERBOX AND HINGE SWING

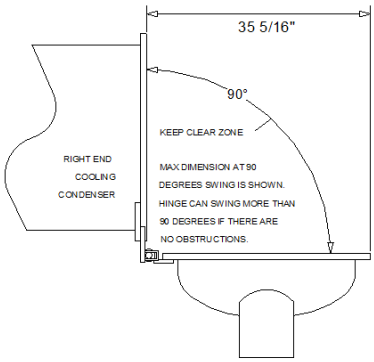

LEFT END OF EVAPORATOR

LEFT HAND NMAR WATERBOX AND HINGE SWING

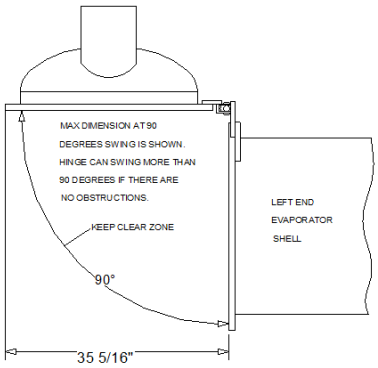

RIGHT END OF EVAPORATOR

RIGHT HAND RETURN BOX AND HINGE SWING

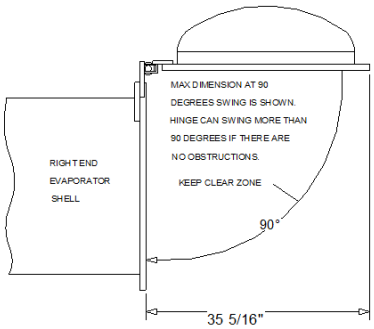

NOTES:
1. DO NOT ROUTE LOW VOLTAGE (30V) WITH CONTROL VOLTAGE (120V) AND DO NOT POWER UNIT UNTIL CHECKOUT AND START UP PROCEDURES HAVE BEEN COMPLETED.
2. RECOMMENDED FIELD WIRING CONNECTIONS ARE SHOWN BY DASHED LINES.
3. ALL FIELD WIRING MUST BE IN ACCORDANCE WITH NATIONAL ELECTRIC CODE AND LOCAL REQUIREMENTS.
4. CLASS 1 FIELD WIRING INSULATION RATING IS REQUIRED TO BE EQUAL TO OR BE GREATER THAN THE EQUIPMENT SUPPLY VOLTAGE RATING. CLASS 2 FIELD WIRING INSULATION IS REQUIRED TO BE RATED AT 300V MINIMUM. ALL CUSTOMER CONTROL CIRCUIT WIRING IS MADE TO CIRCUIT BOARD MOUNTED BOX LUGS WITH A WIRE RANGE OF 14-18 AWG OR TO DIN RAIL MOUNTED SPRING FORCE TERMINALS.
5. ALL UNIT POWER WIRING MUST BE 600 VOLT COPPER CONDUCTORS ONLY. REFER TO UNIT NAMEPLATE FOR MINIMUM CIRCUIT AMPACITY AND MAXIMUM OVERCURRENT PROTECTION DEVICE. PROVIDE AN EQUIPMENT GROUND IN ACCORDANCE WITH APPLICABLE ELECTRIC CODES.
6. UNIT PROVIDED DRY CONTACTS FOR WATER PUMP CONTROL. RELAY RATING AT 120VAC: 7.2 AMPS RESISTIVE, 2.88 AMPS PILOT DUTY, 1/3 HP, 7.2 FLA RELAY RATING AT 240VAC: 5 AMPS GENERAL PURPOSE.
7. TRANE RECOMMENDS WIRING THE 5K1 EVAPORATOR AND 5K2 CONDENSER WATER PUMP CONTROL RELAYS AS SHOWN TO ALLOW THE 1K12 MODULE TO CONTROL PROPER SEQUENCING EVAPORATOR CHILLED WATER PUMP MUST BE CONTROLLED BY THE CHILLER OUTPUT. FAILURE TO DO SO MAY RESULT IN DAMAGE TO THE UNIT.
8. CUSTOMER SUPPLIED CONTACTS FOR ALL LOW VOLTAGE CONNECTIONS MUST BE COMPATABLE WITH DRY CIRCUIT 240 VOLTS DC FOR A 12 mA RESISTIVE LOAD. SILVER OR GOLD PLATED CONTACTS RECOMMENDED.
9. INSTALLATION OF PRIMARY EVAPORATOR AND CONDENSER WATER PROOF OF FLOW DEVICES ARE REQUIRED. THESE ARE INDICATE AS 5S11 AND 5S12.CUSTOMER SUPPLIED DEVICES AND MUST BE A FLOW SENSING DEVICE SUCH AS A FLOW SWITCH, WATER FLOW DETECTION CONTROLLER OR A DIFFERENTIAL PRESSURE SWITCH. PRIMARY EVAPORATOR AND CONDENSER WATER PROOF OF FLOW IS ALSO SHOWN USING OPTIONAL TRANE INSTALLED 1K22 AND 1K23 WATER FLOW DETECTION CONTROLLERS, 4R17 AND 4R18 WATER FLOW DETECTION SENSORS AND WB11 AND WB12 CABLES ARE SUPPLIED BY TRANE FOR FIELD INSTALLATION BY THE CUSTOMER.
10. CUSTOMER SUPPLIED SECONDARY EVAPORATOR AND CONDENSER WATER PROOF OF FLOW DEVICES ARE AT THE DISCRETION OF THE CUSTOMER. THESE ARE INDICATED AS 5S17 AND 5S18 AND MAY BE A WATER PUMP INTERLOCK, VALVE END SWITCH OR ANY OTHER PROOF OF FLOW DEVICE. TRANE RECOMMENDS INSTALLATION OF THE 5S17 SECONDARY EVAPORATOR WATER PROOF OF FLOW DEVICE WHEN THE LEAVING WATER TEMPERATURE IS EXPECTED TO BE 38°F OR LESS AND THAT THE METHOD USED IS INDEPENDENT OF THE PRIMARY WATER PROOF OF FLOW DEVICE TO PROVIDE REDUNDANCY.
11. IF OPTIONAL TRANE INSTALLED 1K22 AND/OR 1K23 WATER FLOW DETECTION CONTROLLERS ARE USED AND THE CUSTOMER CHOOSES TO INSTALL 5S17 AND/OR 5S18 SECONDARY PROOF OF FLOW DEVICES THEN THE CUSTOMER MUST REMOVE TRANE FACTORY WIRE BETWEEN 1X1-2 AND 1K23-4 AND/OR WIRE BETWEEN 1X1-3 AND 1K22-4. SECONDARY DEVICES WOULD THEN BE INSTALLED AS SHOWN. REFER TO THE UNIT SCHEMATIC WIRING DIAGRAM.

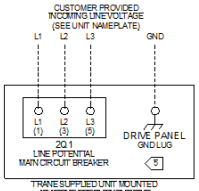

NOTE: ANY 1K13 OR 1K14 DEFAULT OUTPUT MY BE REPROGRAMED TO ANY ALTERNATE ALARM/STATUS OUTPUT SHOWN BELOW.
OPTIONAL 5H15 CHILLER ALARM INDICATOR

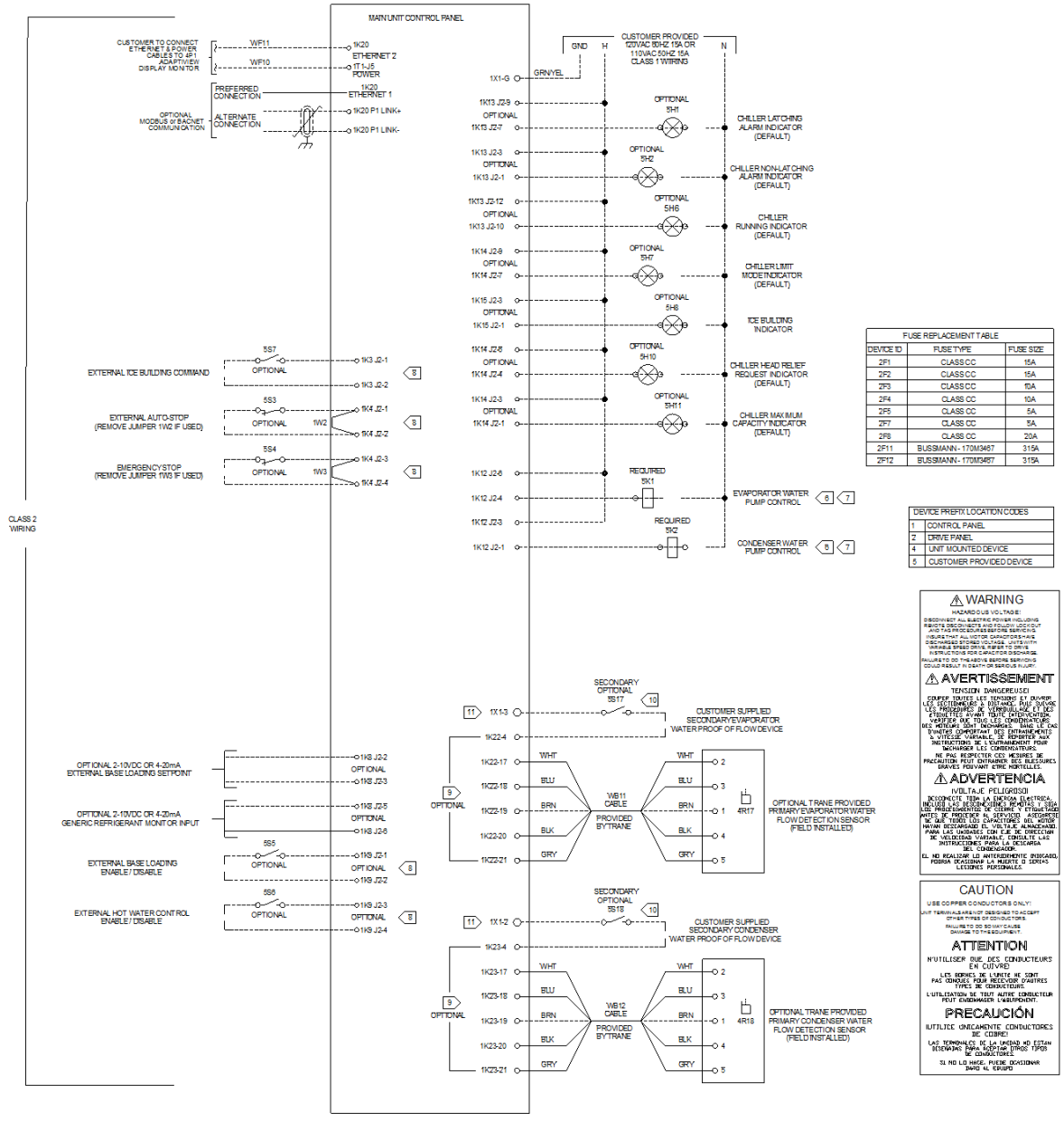

FUSE REPLACEMENT TABLE		
DEVICE ID	FUSE TYPE	FUSE SIZE
2F1	CLASS CC	15A
2F2	CLASS CC	15A
2F3	CLASS CC	10A
2F4	CLASS CC	10A
2F5	CLASS CC	5A
2F7	CLASS CC	5A
2F8	CLASS CC	20A
2F11	BUSSMANN - 170M3467	315A
2F12	BUSSMANN - 170M3467	315A

DEVICE PREFIX LOCATION CODES	
1	CONTROL PANEL
2	DRIVE PANEL
4	UNIT MOUNTED DEVICE
5	CUSTOMER PROVIDED DEVICE

⚠ WARNING
HAZARDOUS VOLTAGE!
DISCONNECT ALL ELECTRIC POWER INCLUDING REMOTE DISCONNECTS AND FOLLOW LOCKOUT AND TAG PROCEDURES BEFORE SERVICING. ENSURE THAT ALL MOTOR CAPACITORS HAVE DISCHARGED BEFORE TOUCHING. UNITS WITH VARIABLE SPEED DRIVE, REFER TO DRIVE INSTRUCTIONS FOR CAPACITOR DISCHARGE.
FAILURE TO DO THE ABOVE BEFORE SERVICING COULD RESULT IN DEATH OR SERIOUS INJURY.

⚠ AVERTISSEMENT
TENSION DANGEREUSE!
COUPER TOUTES LES SOURCES D'ALIMENTATION, LES SECTIONNEURS À DISTANCE AINSI QU'UNE LES PROCÉDURES DE VERROUILLAGE ET DE ÉTIQUETTES AVANT TOUTE INTERVENTION. VÉRIFIER QUE TOUS LES CONDENSATEURS DES MOTEURS SONT DÉCHARGÉS. DANS LE CAS D'UNITÉS COMPORTANT DES ENTRAÎNEMENTS À VITESSE VARIABLE, SE REPORTER AUX INSTRUCTIONS DE L'ENTRAÎNEMENT POUR DÉCHARGER LES CONDENSATEURS.
NE PAS RESPECTER CES MESURES DE PRÉCAUTION PEUT ENTRAÎNER DES BLESSURES GRAVES POUVANT ÊTRE MORTELLES.

⚠ ADVERTENCIA
¡VOLTAJE PELIGROSO!
DESCONECTE TODA LA ENERGÍA ELÉCTRICA, INCLUIDO LAS DESCONEXIONES REMOTAS Y SIGA LOS PROCEDIMIENTOS DE CIERRE Y ETIQUETADO ANTES DE PROCEDER AL SERVICIO. ASEGÚRESE DE QUE TODOS LOS CAPACITORES DEL MOTOR HAYAN DESCARGADO EL VOLTAJE ALMACENADO. PARA LAS UNIDADES CON E.D. DE DIRECCIÓN DE VELOCIDAD VARIABLE, CONSULTE LAS INSTRUCCIONES DEL DESCARGA DEL CONDENSADOR.
EL NO REALIZAR LO ANTERIORMENTE INDICADO, PODRÍA OCASIONAR LA MUERTE O SERIAS LESIONES PERSONALES.

CAUTION
USE COPPER CONDUCTORS ONLY!
UNIT TERMINALS ARE NOT DESIGNED TO ACCEPT OTHER TYPES OF CONDUCTORS.
FAILURE TO DO SO MAY CAUSE DAMAGE TO THE EQUIPMENT.

ATTENTION
N'UTILISER QUE DES CONDUCTEURS EN CUIVRE!
LES BORNES DE L'UNITÉ NE SONT PAS CONÇUES POUR RECEVOIR D'AUTRES TYPES DE CONDUCTEURS.
L'UTILISATION DE TOUT AUTRE CONDUCTEUR PEUT ENDOMMAGER L'ÉQUIPEMENT.

PRECAUCIÓN
¡UTILICE ÚNICAMENTE CONDUCTORES DE COBRE!
LAS TERMINALES DE LA UNIDAD NO ESTÁN DISEÑADAS PARA ACEPTAR OTROS TIPOS DE CONDUCTORES.
SI NO LO HACE, PUEDE OCASIONAR DAÑO AL EQUIPO.

General
The chiller is completely factory-packaged including the compressor, motor, evaporator, condenser, unit controller, economizer, and all interconnecting chiller piping and wiring. A control power transformer is standard and supplies all the auxiliary power needs for chiller mounted devices. The adaptiview frequency drive (AFD) is integral to the chiller as standard.

Compressor-Motor
Direct drive multiple-stage compressor, single-stage capacity control guide vanes. Dynamically balanced shrouded aluminum alloy impellers. Refrigerant cooled, hermetically sealed, two-pole motor.Two magnetic bearings support the rotating assembly. Fully integrated magnetic bearing controller.

Evaporator-Condenser
Shells are carbon steel plate. Evaporator and condenser include relief devices per ASME Section VIII, Div.1 / ASHRAE 15 Safety Code. Carbon steel tube sheets are drilled, reamed and grooved to accommodate tubes. Tubes are individually replaceable externally finned seamless copper. Tubes are mechanically expanded into tube sheets. A multiple orifice control system maintains proper refrigerant flow. Condenser baffle prevents direct impingement of compressor discharge gas upon the tubes. Refrigerant side of the assembled unit is tested at both pressure (300.00 psi condenser / 200.00 psi evaporator leak test) and vacuum. Water side is hydrostatically tested at one and one-half times design working pressure; but not less than 225.00 psi.

Trane reserves the right to implement chiller technology enhancements that will reduce the chiller's refrigerant charge, with no impact on chiller performance. Changes may be reflected in the chillers nameplate refrigerant charge and the quantity of refrigerant charge shipped in the unit or to the jobsite, depending upon the final date of equipment manufacture.

Water Boxes
Drains and vents - Water boxes typically have 3/4-inch NPTI vents and drain connections provided. Evaporators and condensers have one vent and one drain. If grooved connections are offered, the design is based on Style 77.

Economizer
A thermal economizer with no moving parts provides power saving capability.

Evaporator Proof of Flow - Thermal Dispersion
A factory provided, field installed thermal dispersion type proof of flow switch (IFM) is provided. The thermal dispersion controller is mounted in the chiller control panel. The piping probe and wiring is shipped lose for field installation in the ship with components box. Follow the installation instructions in the chiller installation manual. Reference specific IFM installation manual (PART- SVN223*-EN) notes shipped with your flow switch or contact local Trane sales office.

Condenser Proof of Flow - Thermal Dispersion
A factory provided, field installed thermal dispersion type proof of flow switch (IFM) is provided. The thermal dispersion controller is mounted in the chiller control panel. The piping probe and wiring is shipped lose for field installation in the ship with components box. Follow the installation instructions in the chiller installation manual. Reference specific IFM installation manual (PART- SVN223*-EN) notes shipped with your flow switch or contact local Trane sales office.

Enhanced Flow Management Package
This provides enhanced variable flow control and compensation and adds flow fields on the AdaptiView display. The flow compensation component enhances the unit controllers variable flow rate of change capabilities from 30% per minute to up to 50% per minute. Included are factory mounted differential water pressure sensors for both the evaporator and condenser. Differential pressure switches or some other means to prove flow for the control are still required. Max pressure rating for the pressure sensors is 365 psig.

The following additional fields will be displayed on the unit controller:
Evaporator differential water pressure
Condenser differential water pressure
Evaporator Tons
Due to their accuracy, these parameters are not designed to be used for detailed metering or analysis

AdaptiView Control Panel
The Tracer (TM) AdaptiView is a microprocessor-based chiller control system that provides complete stand alone system control and monitoring for the water cooled Agility (TM). It is a factory mounted package including a full complement of controls to safely and efficiently operate the Agility chiller, including interface to the starter, and comprehensive motor protection. Inlet and outlet water (fluid) temperature sensors are located in the evaporator and condenser water box connections as standard.

The display is a touch sensitive 12 1/8" diagonal color liquid crystal display (LCD) that uses color graphics and animation to ensure ease of use. The touch sensitive interface allows the operator to view the chiller graphically and receive a status indication via subsystem animations. The operator can navigate easily between the primary chiller subsystems including: compressor, evaporator, condenser, and motor. For each subsystem, you can view status and detailed operating parameters. In addition, alarms, reports, trending, and settings can all be accessed quickly from the main screen. The display is mounted on a flexible "arm" that allows extensive height and viewing angle variations.

The panel supports an extensive list of languages including the default English.The data can be set to be viewed in inch pounds IP or metric units SI. Class 1 control panel voltage (30-115V) is clearly labeled. Class 2 input voltage (30V max) is also labeled.

Operating Data Including:
*operating hours
*number of starts
*chilled water setpoint
*evaporator and condenser water flow status
*evaporator entering and leaving water temperatures
*evaporator saturated refrigerant temperatures
*evaporator approach temperatures
*evaporator refrigerant pressure
*condenser entering and leaving water temperatures
*condenser saturated refrigerant temperatures
*condenser approach temperatures
*condenser refrigerant pressure
*AFD average motor current %RLA
*motor winding temperatures
*AFD output power

The AdaptiView also contains the following dedicated reports:
Evaporator, Condenser, Compressor Motor, and ASHRAE. Each report is comprised of a detailed listing of operational data relative to that chiller subsystem.

Control Functions Including:
*leaving chilled water temperature
*percent demand limit
*chiller water reset (based on return water temperature)
*front panel control type
*setpoint source
*differential to start
*differential to stop

Status Data Including:
*waiting to start
*running
*run limit
*run inhibit (adaptive)
*auto
*preparing shutdown
*shutting down
*stopped

Safeties Including:
Automatic safety shutdown for:

*low chilled water temperature
*low evaporator refrigerant pressure
*high condenser refrigerant pressure
*evaporator and condenser flow status
*high motor temperature
*AFD function faults
*critical temperature and pressure sensor faults
*AFD motor current overload

The devices are of a latching trip out type requiring manual reset. Non-latching safety trip outs for operating conditions external to the chiller automatically permits unit to resume normal operation when condition is corrected.

Surge protection - avoids surge by changing operating conditions through speed and inlet guide vane adjustments. Head relief through lowering cooling tower water temperature can be requested. If not corrected within 7 minutes, chiller is shut down.

Enhanced Adaptive Control(TM) - built in intelligence to keep the chiller on line (safely making maximum tons) while simultaneously preventing chiller damage/failure. During any chiller limiting mode of operation, the control panel enunciates the condition via a relay output.

Trending
The controller provides 10 standard graphs for trending multiple parameters. The operator can add an additional 6 customer graphs if desired. On any one custom graph, the operator can choose to trend up to 10 unique parameters from a more comprehensive list. Two Y axes are available for any graph to facilitate readability.

Diagnostics
AdaptiView includes comprehensive diagnostic monitoring. All active diagnostics are available, and up to 20 historic diagnostics are communicated to the operator via the 12 1/8" LCD display with graphic navigation system. Each diagnostic is time and date stamped.

Security
The AdaptiView can be set to prevent unauthorized access to the chiller settings. The operator can choose to secure the operating settings with a password. Data and reports can still be accessed once the settings are locked out.

The memory for the AdaptiView is non-volatile type, so if power is lost, operating settings are retained. A life time battery is standard, which is used only to support the clock function for the chiller.

Chilled and Condenser Water Pump Relays
Chilled water and condenser water pump relays are provided and it is recommended that they be used for pump control.

Operating Status
The following hardwire binary outputs are available:
Compressor running relay
Alarm relay - manual reset
Alarm relay - auto reset
Head relief request relay
Maximum capacity relay
AFD interrupt failure

Paint
All Agility(TM) painted surfaces are coated with a primer and an air-dry beige primer-finisher prior to shipment.

Isolation
All units ship with neoprene isolator pads as standard. Enough pads are provided to cover the area under the chiller supports.

Shipment
All units are of hermetic design, leak tested, factory charged with refrigerant, or charged to 5.00 psi dry nitrogen and shipped as a single factory assembled package. The entire chiller is shrink wrapped for protection.

AFD Design Features:
*NEMA 1 ventilated enclosure with hinged, locking door is tested to a short circuit rating of 65,000 Amps. It includes a padlock-able door-mounted circuit breaker/shunt trip with AIC rating of 65,000 Amps. The circuit breaker is interlocked with the enclosure door. The entire package is UL/CUL listed.
*Simple modular construction
*The drive is rated for maximum 480/60/3 input power, +/-10%, or as an option 600/60/3
*Displacement power factor of 0.98 at full load and 0.96 at part load.
*Minimum efficiency of 97% at rated load
*Full motor voltage (460/480 +/- 10%) is applied regardless of the input voltage
*Soft-start; linear acceleration; coast to stop
*Adjustable output frequency from 100 to 308 hertz
*All control circuit voltages are physically and electrically isolated from power circuit voltage
*150% instantaneous torque available for improved surge control
*Output line-to-line and line-to-ground short circuit protection

*Optional harmonic attenuation - integrated passive control of the building AC power assures low line -generated harmonics back to the user's power grid. The AFD has less than or equal to 5% current total demand distortion (TDD) as measured at the AFD. This is based on an electrical system with voltage distortion less than 1.5%

Required Installer Responsibilities

The following are considered functions normally required of the equipment installer.

-Install unit on a foundation with flat support surfaces level within 1/16" and of sufficient length to support concentrated loading. (Spring isolators should be considered whenever chiller installation is planned for an upper story location).

-Place isolation pads provided by the chiller manufacturer under the unit. When spring isolators are chosen, no pads are provided.

-Install unit per applicable Trane Installation Manual.

-Complete all water and electrical connections.

-Where specified, provide and install valves in water piping upstream and downstream of the evaporator and condenser water boxes as means of isolating shells for maintenance and to balance and trim system.

-Furnish and install a flow switch or equivalent device in both the chilled water and condenser water piping properly interlocked to insure that the unit can operate only when waterflow is established.

-Furnish and install taps for thermometers and pressure gauges in water piping adjacent to inlet and outlet connections of both evaporator and condenser.

-Furnish and install drain valves to each water box.

-Install vent cocks on each water box.

-Furnish and install strainers upstream of chiller evaporator and condenser bundles to protect tubes from potential damage caused by debris in the circulating water. Note: Failure to install strainers in all water piping entering the chiller could result in tube plugging conditions that could damage unit components. If the circulating pumps are immediately upstream of the chiller bundles, then the strainer can be installed immediately ahead of the pumps.If the circulating pumps are downstream of the chiller bundles, then the strainers should be installed immediately ahead of the chiller bundles.

-Furnish sufficient refrigerant of 25 lb. per machine and dry nitrogen of 50.0 lb. per machine for pressure testing under manufacturer's supervision.

-Start-up unit under supervision of qualified Trane field engineer.

-Where specified, insulate evaporator and any other portions of the machine required to prevent sweating under normal operating conditions.

-Water connection piping must not transfer forces to the chiller. Because of cumulative tolerances in manufacture and field installation, pre-piping of water connections closer than 36" is not recommended. Any problems associated with pre-piping of water connections closer than 36" to the chiller are the responsibility of the installing contractor.

-Furnish and install vent lines for evaporator and condenser relief devices venting to atmosphere per ASHRAE 15 and unit installation manual.

Field Disassembly

With chillers that may require field disassembly (for example due to clearance concerns during unit installation), reference the Disassembly and Reassembly manual and your Trane Sales representative prior to the order being placed. Caution: if certain components are removed in the field, for example the economizer, the necessary components (gaskets, seals, etc.) are not provided as standard.

Agility Condenser WPD Curve

Pressure Drop Curve

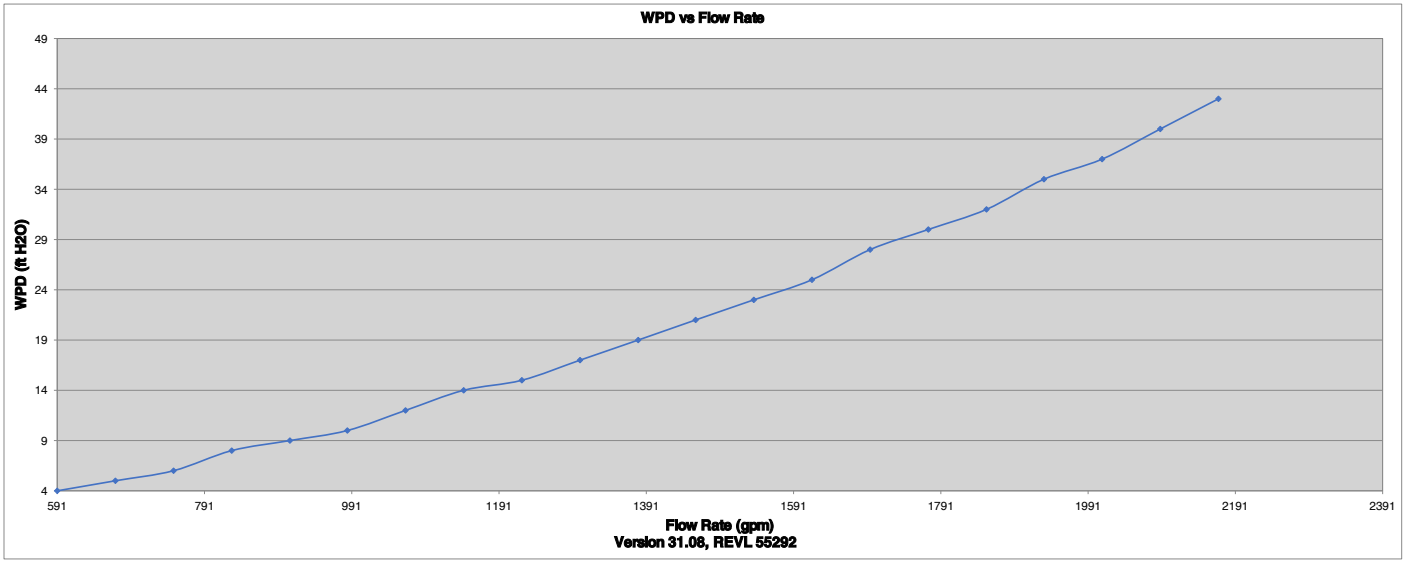

Flow Rate Table

Flow Rate (gpm)	WPD (ft H2O)
591	4
670	5
749	6
828	8
907	9
985	10
1064	12
1143	14
1222	15
1301	17
1380	19
1458	21
1537	23
1616	25
1695	28
1774	30
1853	32
1931	35
2010	37
2089	40
2168	43

Unit Configuration

SRTY-UAFD	EVFP-TDFS	TEST-NONE
MODL-HDWA	EVVF- NO	TTOL- NA
TYPE-SNGL	HGEV-HGBT	ASTT- NO
LQDD- NO	CDSZ-040A	ASKT-NONE
LQDP- NO	TSTY-STD	OPMM-KWTN
NTON-300	AH19-COMP	INSL- NO
IVLT-460	AH22-COMP	EXOP-YES
IHRZ- 60	CTSP-NONE	TRMM-BCNT
VOLT-460	CDBS- A	WPSR-WFC
HRTZ- 60	CDTM-TECU	CRFG-R513
RCTP- NO	CDTC-283	RLDV-SPLD
CPKW-441	CDTH- 25	ACOU-YES
FRAM- T1	CDWP- 2	
DSOP- NO	CDFP-TDFS	
EVSZ-040A	HGCD-HGBT	
ETSP-NONE	EXEV-400	
EVBS- C	RCRQ-NONE	
EVTM-TMCU	AH13-COMP	
EVTC-280	AH16-COMP	
EVTH- 25	ARCL-CERT	
EVWP- 2	FTST-YES	

Agility Evaporator WPD Curve

Pressure Drop Curve

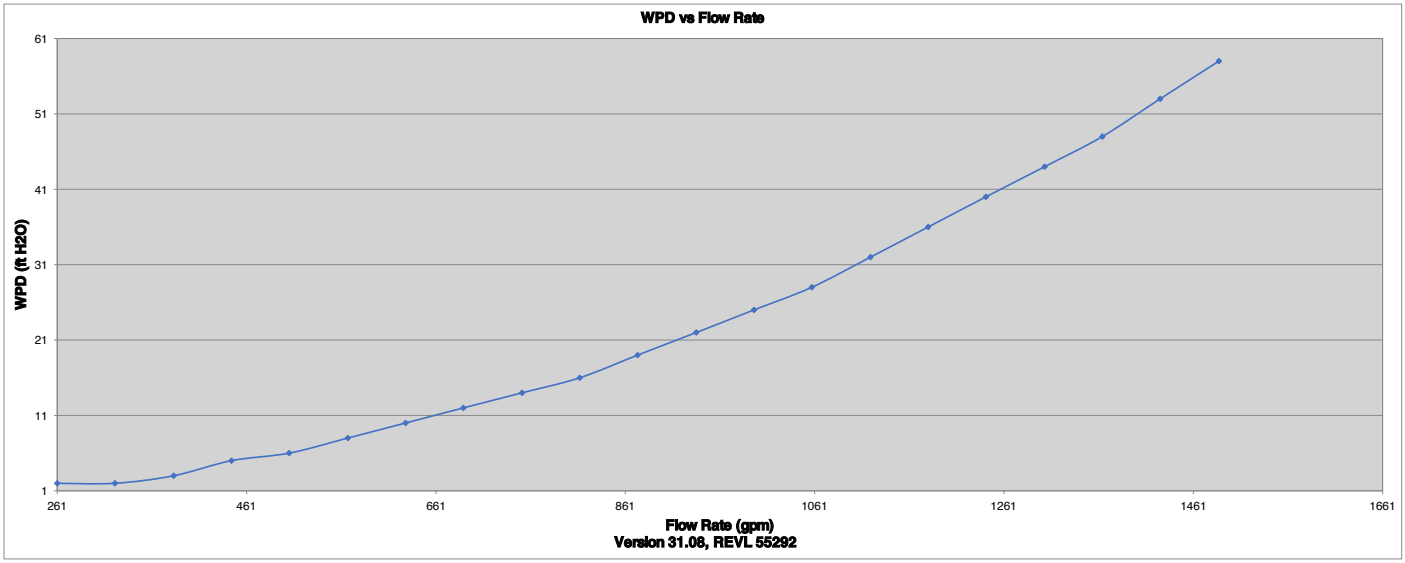

Flow Rate Table

Flow Rate (gpm)	WPD (ft H2O)
261	2
322	2
384	3
445	5
506	6
568	8
629	10
690	12
752	14
813	16
874	19
936	22
997	25
1058	28
1120	32
1181	36
1242	40
1304	44
1365	48
1426	53
1488	58

Unit Configuration

SRTY-UAFD	EVFP-TDFS	TEST-NONE
MODL-HDWA	EVVF- NO	TTOL- NA
TYPE-SNGL	HGEV-HGBT	ASTT- NO
LQDD- NO	CDSZ-040A	ASKT-NONE
LQDP- NO	TSTY-STD	OPMM-KWTN
NTON-300	AH19-COMP	INSL- NO
IVLT-460	AH22-COMP	EXOP-YES
IHRZ- 60	CTSP-NONE	TRMM-BCNT
VOLT-460	CDBS- A	WPSR-WFC
HRTZ- 60	CDTM-TECU	CRFG-R513
RCTP- NO	CDTC-283	RLDV-SPLD
CPKW-441	CDTH- 25	ACOU-YES
FRAM- T1	CDWP- 2	
DSOP- NO	CDFP-TDFS	
EVSZ-040A	HGCD-HGBT	
ETSP-NONE	EXEV-400	
EVBS- C	RCRQ-NONE	
EVTM-TMCU	AH13-COMP	
EVTC-280	AH16-COMP	
EVTH- 25	ARCL-CERT	
EVWP- 2	FTST-YES	

SECTION 23 40 02.2
WATER COOLED CHILLERS

PRO-FORMA SUBMITTAL DOCUMENTS

FOR

PERFORMANCE OF WATER COOLED CHILLERS **@16dT**

(ATTACHED)

- - - E N D - - -

Unit Features

Chiller Model	Application Type	Total Power	Refrigerant	Line Volt	Line Frequency	Starter Type
HDWA 300	Standard cooling	136.1 kW	Full Factory Refrigerant Charge (R-513A)	460. V	60. Hz	VFD

Unit Overview

Cooling Capacity	250.0 tons
Full Load Cooling Efficiency	0.5445 kW/ton
Cooling COP	6.459 COP (kW/kW)
Tracer Controls	BACnet
Compressor	300
Orifice	400
NPLV.IP	0.3352 kW/ton
Rated NPLV.IP	0.3352 kW/ton



Selection Tolerances

Selection Tolerance	AHRI Tolerance

Shell Information

	Evaporator	Condenser
	Fluid Temperature	
Entering	60.00 F	85.00 F
Leaving	44.00 F	94.28 F
	Fluid Properties	
Fluid Type	water	water
Fluid Concentration	0.00 %	0.00 %
Fouling Factor	0.000100 hr-sq ft-deg F/ Btu	0.000250 hr-sq ft-deg F/ Btu
	Flow Rate	
Design Flow	373.5 gpm	750.0 gpm
Min Flow	261.0 gpm	591.2 gpm
Max Flow	1488 gpm	2168 gpm
	Fluid Pressure Drop	
PD at Design Flow	3.42 ft H2O	6.42 ft H2O
PD at Min Flow	1.56 ft H2O	4.23 ft H2O
PD at Max Flow	57.6 ft H2O	42.6 ft H2O

	Evaporator	Condenser
	Construction Features	
Shell Size	040A	040A
Bundle Size	C	A
Tube Type	TMCU	TECU
Tube Thickness	0.025"	0.025"
Connection Type	Victaulic connection	Victaulic connection
Water box type	Non-marine	Non-marine
Water box pressure	150 psig	150 psig
Wbox Arrangement	Evap in LH end - evap out LH end	Cond in RH end - cond out RH end
Flow Proving	Thermal dispersion flow swith (IFM)	Thermal dispersion flow switch (IFM)
Number of Passes	Two pass evap water box	Two pass cond water box
Fluid Volume	11.54 cu ft	15.33 cu ft

Unit Electrical

Low Voltage AFD type	Unit mounted low voltage AFD	**Min Circuit Ampacity**	244.00 A
AFD frame size	238 max RLA	**Max Overcurrent Protection**	400.00 A
Harmonic filter option	No	**Primary RLA**	196.00 A
Motor	441	**Motor Locked Rotor Amps**	1000.00 A
Total Power	136.1 kW		

Design and Physical Information

Operating Weight	15136.0 lb	**Shipping Weight - No Charge**	12664.0 lb	**Refrigerant charge**	800.0 lb
Agency Listing	U.L. / CUL listed	**Shipping Weight - Charge**	13104.0 lb	**Cond Shell Construction**	ASME condenser construction
AFD Heat Rejected to ambient	7.199 MBh	**Chiller Heat Rejected to ambient**	2.324 MBh	**Anticipated Sound at AHRI Conditions**	80. dBA

Information for AHRI and ASHRAE Projects

AHRI 550/590 2015 classification	Certified
ASHRAE 90.1-2013	Complies
ASHRAE 90.1-2016	Complies
ASHRAE 90.1-2019	Complies
ASHRAE 90.1-2022	Complies

Certified in accordance with the AHRI Water-Cooled Water-Chilling and Heat Pump Water-Heating Packages Certification Program, which is based on AHRI Standard 550/590 (I-P) and AHRI Standard 551/591 (SI). Certified units may be found in the AHRI Directory at www.ahridirectory.org.

AHRI CERTIFIED® www.ahridirectory.org Water-Cooled Water Chilling and Heat Pump Water-Heating Packages AHRI Standards 550/590 and 551/591

Warranty

Labor 1st year	1st year labor warranty whole unit

Information for LEED Projects

Refrigeration capacity	250.0 tons	**Total power**	136.1 kW
Refrigerant charge	800.0 lb	**NPLV.IP**	0.3352 kW/ton
		Rated NPLV.IP	0.3352 kW/ton

The U.S. Green Building Council's LEED® green building program is the preeminent program for the design, construction, maintenance and operations of high-performance green buildings. It provides independent, third-party verification that a building project meets the highest green building and performance measures.

Partload Information

IPLV.IP 0.3295 kW/ton												
% Load %	Cooling Capacity tons	Evap LWT F	Evap FR gpm	Evap EWT F	Evap PD ft H2O	Cond EWT F	Cond FR gpm	Cond LWT F	Cond PD ft H2O	kW kW	Amps A	Cooling Eff kW/ton
100	250.0	44.00	597.2	54.00	9.32	85.00	748.4	94.30	6.39	134.3	195.60	0.0000
75	187.5	44.00	597.2	51.50	9.31	75.00	748.4	81.72	6.62	74.53	112.30	0.3975
50	125.0	44.00	597.2	49.00	9.29	65.00	748.4	69.33	6.83	35.30	57.00	0.2824
25	62.50	44.00	597.2	46.50	9.27	65.00	748.4	67.19	6.85	20.52	36.30	0.3283
AHRI Relief at 5% interval												
% Load %	Cooling Capacity tons	Evap LWT F	Evap FR gpm	Evap EWT F	Evap PD ft H2O	Cond EWT F	Cond FR gpm	Cond LWT F	Cond PD ft H2O	kW kW	Amps A	Cooling Eff kW/ton
100	250.0	44.00	373.5	60.00	3.42	85.00	750.0	94.28	6.42	136.1	196.00	0.5445
95	237.5	44.00	373.5	59.20	3.42	83.00	750.0	91.75	6.46	122.1	176.80	0.5141
90	225.0	44.00	373.5	58.40	3.41	81.00	750.0	89.23	6.51	109.1	158.80	0.4848
85	212.5	44.00	373.5	57.60	3.41	79.00	750.0	86.71	6.55	96.99	142.10	0.4564
80	200.0	44.00	373.5	56.80	3.40	77.00	750.0	84.20	6.60	85.80	126.70	0.4290
75	187.5	44.00	373.5	56.00	3.40	75.00	750.0	81.70	6.64	75.61	112.50	0.4033
70	175.0	44.00	373.5	55.20	3.39	73.00	750.0	79.22	6.69	66.31	99.60	0.3789
65	162.5	44.00	373.5	54.39	3.39	71.00	750.0	76.73	6.73	57.68	87.60	0.3549
60	150.0	44.00	373.5	53.59	3.38	69.00	750.0	74.25	6.77	49.70	76.50	0.3314
55	137.5	44.00	373.5	52.79	3.38	67.00	750.0	71.79	6.81	42.43	66.30	0.3085
50	125.0	44.00	373.5	51.99	3.37	65.00	750.0	69.32	6.85	35.90	57.20	0.2872
45	112.5	44.00	373.5	51.20	3.37	65.00	750.0	68.89	6.86	32.54	52.40	0.2892
40	100.0	44.00	373.5	50.39	3.36	65.00	750.0	68.46	6.86	29.44	48.10	0.2944
35	87.50	44.00	373.5	49.60	3.36	65.00	750.0	68.04	6.87	26.57	44.10	0.3037
30	75.00	44.00	373.5	48.80	3.35	65.00	750.0	67.61	6.88	23.79	40.20	0.3171
25	62.50	44.00	373.5	48.00	3.35	65.00	750.0	67.19	6.88	21.04	36.40	0.3366
20	50.00	44.00	373.5	47.20	3.34	65.00	750.0	66.77	6.89	19.86	33.70	0.3972
17	42.50	44.00	373.5	46.72	3.34	65.00	750.0	66.52	6.89	18.64	32.00	0.4386
Constant Condenser at 5% interval												
% Load %	Cooling Capacity tons	Evap LWT F	Evap FR gpm	Evap EWT F	Evap PD ft H2O	Cond EWT F	Cond FR gpm	Cond LWT F	Cond PD ft H2O	kW kW	Amps A	Cooling Eff kW/ton
100	250.0	44.00	373.5	60.00	3.42	85.00	750.0	94.28	6.42	136.1	196.00	0.5445
95	237.5	44.00	373.5	59.20	3.42	85.00	750.0	93.80	6.42	127.4	184.20	0.5363
90	225.0	44.00	373.5	58.40	3.41	85.00	750.0	93.33	6.43	119.0	172.70	0.5289
85	212.5	44.00	373.5	57.60	3.41	85.00	750.0	92.85	6.44	111.0	161.90	0.5224
80	200.0	44.00	373.5	56.80	3.40	85.00	750.0	92.38	6.45	103.4	151.50	0.5172
75	187.5	44.00	373.5	56.00	3.40	85.00	750.0	91.91	6.45	96.26	141.70	0.5134
70	175.0	44.00	373.5	55.20	3.39	85.00	750.0	91.45	6.46	89.47	132.40	0.5113
65	162.5	44.00	373.5	54.39	3.39	85.00	750.0	90.99	6.47	83.16	123.80	0.5117
60	150.0	44.00	373.5	53.59	3.38	85.00	750.0	90.54	6.47	77.18	115.60	0.5145
55	137.5	44.00	373.5	52.79	3.38	85.00	750.0	90.08	6.48	71.42	107.80	0.5194
50	125.0	44.00	373.5	51.99	3.37	85.00	750.0	89.63	6.49	66.22	100.60	0.5298
45	112.5	44.00	373.5	51.20	3.37	85.00	750.0	89.19	6.50	61.60	94.20	0.5476
40	100.0	44.00	373.5	50.39	3.36	85.00	750.0	88.75	6.50	57.49	88.60	0.5749
35	87.50	44.00	373.5	49.60	3.36	85.00	750.0	88.29	6.51	51.66	80.40	0.5904
30	75.00	44.00	373.5	48.80	3.35	85.00	750.0	87.84	6.52	45.72	72.10	0.6097
25	62.50	44.00	373.5	48.00	3.35	85.00	750.0	87.58	6.52	60.57	94.30	0.9691
20	50.00	44.00	373.5	47.20	3.34	85.00	750.0	87.14	6.53	58.53	88.20	1.171

Regulatory Compliance



(1) Certified in accordance with the AHRI Water-Cooled Water-Chilling and Heat Pump Water-Heating Packages Certification Program, which is based on AHRI Standard 550/590 (I-P) and AHRI Standard 551/591 (SI). Certified units may be found in the AHRI Directory at www.ahridirectory.org

(2) Unit is certified in accordance with EN Standards 14511 and 14825 Standard Rating Conditions.

Trane Select Assist Version Number:	55292.00 Each
Data Generation Date:	2/27/2025

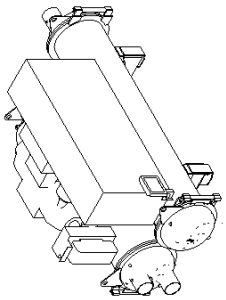

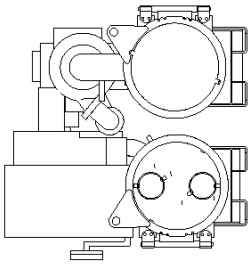

RIGHT SIDE VIEW

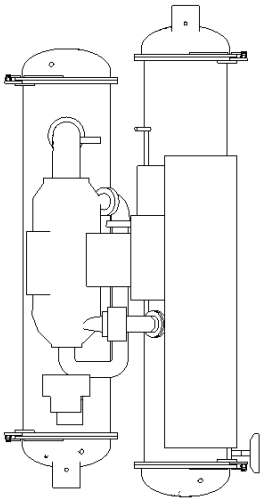

TOP VIEW

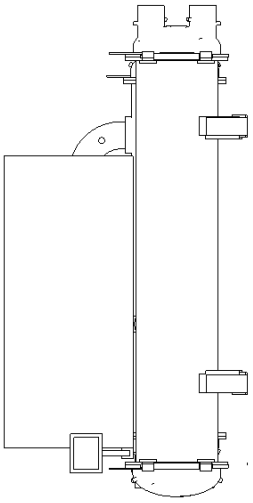

FRONT VIEW

SHELL TYPE	CONN DIA	CONN TYPE	FLOW DIRECTION
EVAPORATOR	8"	VICTAULIC	IN BOTTOM OUT TOP
CONDENSER	8"	VICTAULIC	IN BOTTOM OUT TOP

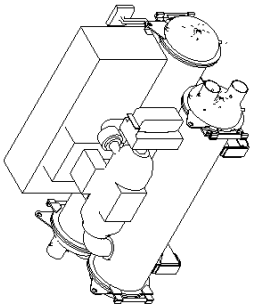

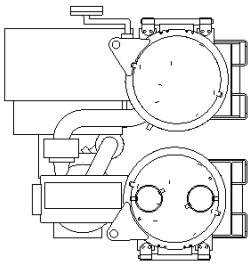

LEFT SIDE VIEW

CUSTOMER NOTES:

GRAPHICS ON SUBMITTAL ARE SIMPLIFIED TO SHOW MAJOR ENVELOPE COMPONENTS.
UNIT STRUCTURE AND SUBCOMPONENTS MAY BE REMOVED FOR CLARITY.

UNLESS OTHERWISE SPECIFIED DIMENSIONAL TOLERANCE +/-1/2".
COOLING COND CONNS ARE STRAIGHT OUT THE END OF THE WATER BOX.
WATER BOX DRAIN AND VENT LOCATIONS ARE SHOWN ON THE WATER BOX END PLATES.

Model HDWA
Nominal tons 300

Model HDWA
Nominal tons 300

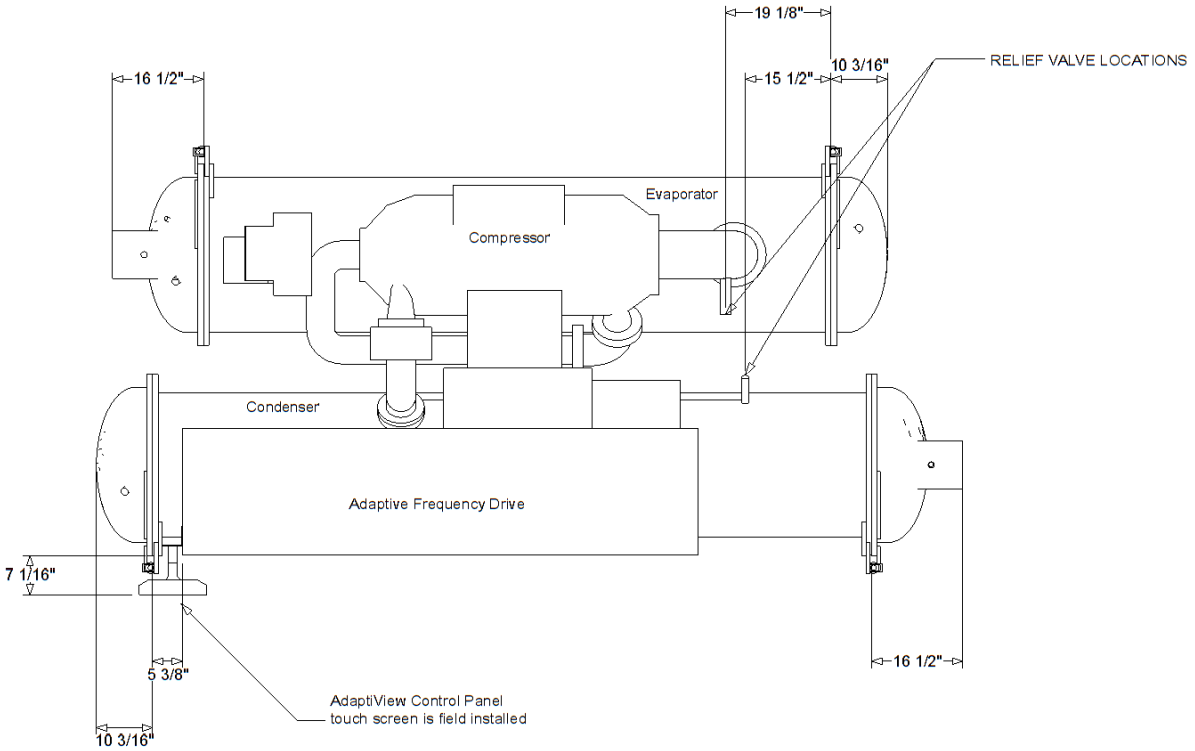

TOP VIEW

CUSTOMER NOTES:

GRAPHICS ON SUBMITTAL ARE SIMPLIFIED TO SHOW MAJOR ENVELOPE COMPONENTS.
UNIT STRUCTURE AND SUBCOMPONENTS MAY BE REMOVED FOR CLARITY.

UNLESS OTHERWISE SPECIFIED DIMENSIONAL TOLERANCE +/-1/2".
COOLING COND CONNS ARE STRAIGHT OUT THE END OF THE WATER BOX.
WATER BOX DRAIN AND VENT LOCATIONS ARE SHOWN ON THE WATER BOX END PLATES.

SHELL TYPE	CONN DIA	CONN TYPE	FLOW DIRECTION
EVAPORATOR	8"	VICTAULIC	IN BOTTOM OUT TOP
CONDENSER	8"	VICTAULIC	IN BOTTOM OUT TOP

Model HDWA
Nominal tons 300

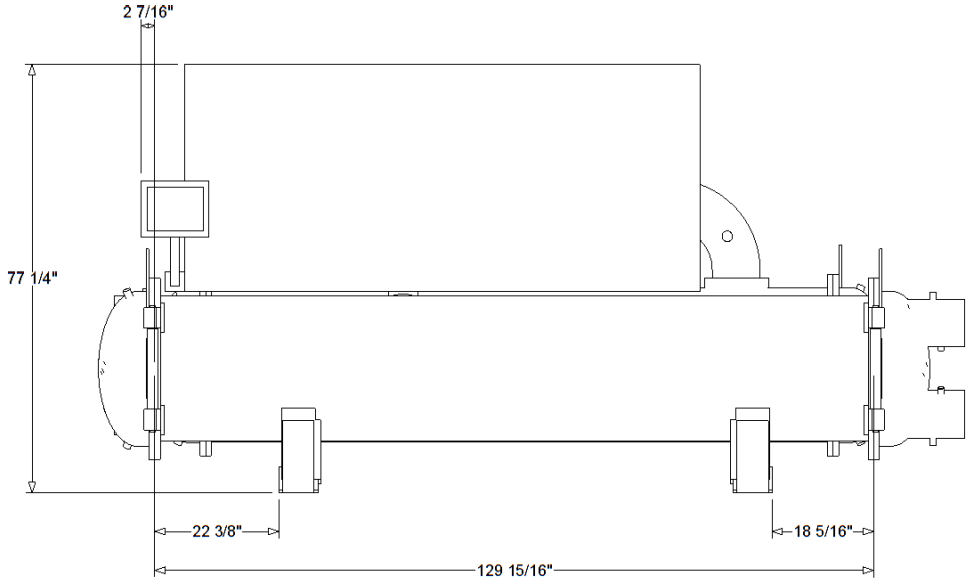

FRONT VIEW

CUSTOMER NOTES:

GRAPHICS ON SUBMITTAL ARE SIMPLIFIED TO SHOW MAJOR ENVELOPE COMPONENTS.
UNIT STRUCTURE AND SUBCOMPONENTS MAY BE REMOVED FOR CLARITY.

UNLESS OTHERWISE SPECIFIED DIMENSIONAL TOLERANCE +/-1/2".
COOLING COND CONNS ARE STRAIGHT OUT THE END OF THE WATER BOX.
WATER BOX DRAIN AND VENT LOCATIONS ARE SHOWN ON THE WATER BOX END PLATES.

SHELL TYPE	CONN DIA	CONN TYPE	FLOW DIRECTION
EVAPORATOR	8"	VICTAULIC	IN BOTTOM OUT TOP
CONDENSER	8"	VICTAULIC	IN BOTTOM OUT TOP

Model HDWA
Nominal tons 300

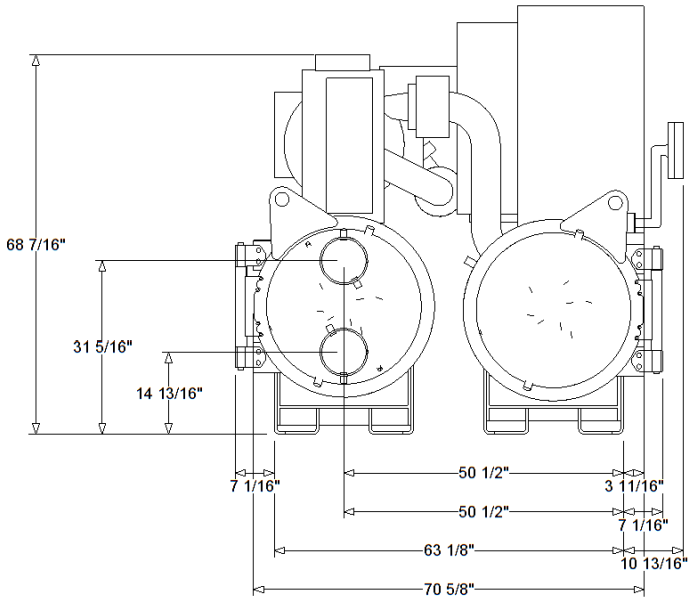

LEFT SIDE VIEW

CUSTOMER NOTES:

GRAPHICS ON SUBMITTAL ARE SIMPLIFIED TO SHOW MAJOR ENVELOPE COMPONENTS.
UNIT STRUCTURE AND SUBCOMPONENTS MAY BE REMOVED FOR CLARITY.

UNLESS OTHERWISE SPECIFIED DIMENSIONAL TOLERANCE +/-1/2".
COOLING COND CONNS ARE STRAIGHT OUT THE END OF THE WATER BOX.
WATER BOX DRAIN AND VENT LOCATIONS ARE SHOWN ON THE WATER BOX END PLATES.

SHELL TYPE	CONN DIA	CONN TYPE	FLOW DIRECTION
EVAPORATOR	8"	VICTAULIC	IN BOTTOM OUT TOP
CONDENSER	8"	VICTAULIC	IN BOTTOM OUT TOP

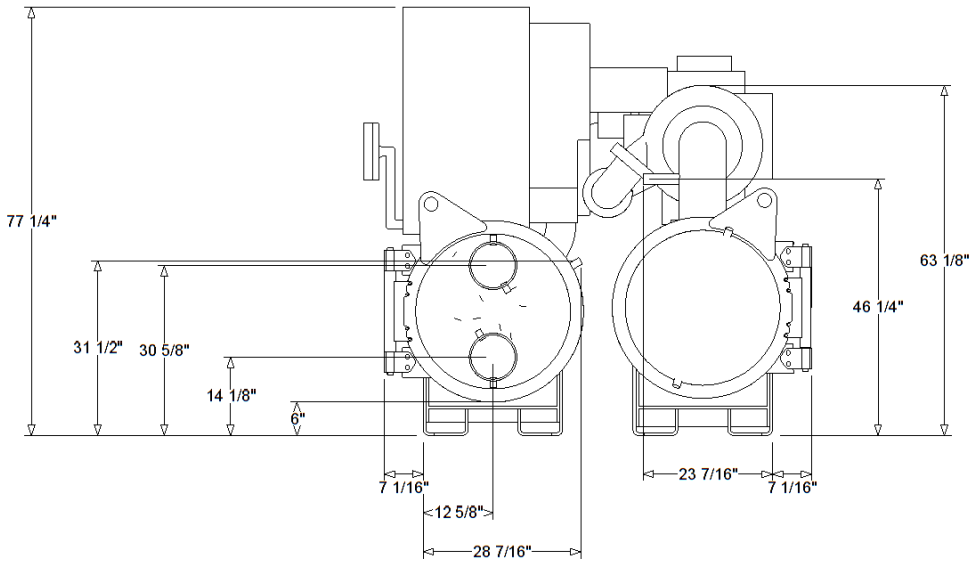

RIGHT SIDE VIEW

CUSTOMER NOTES:

GRAPHICS ON SUBMITTAL ARE SIMPLIFIED TO SHOW MAJOR ENVELOPE COMPONENTS.
UNIT STRUCTURE AND SUBCOMPONENTS MAY BE REMOVED FOR CLARITY.

UNLESS OTHERWISE SPECIFIED DIMENSIONAL TOLERANCE +/-1/2".
COOLING COND CONNS ARE STRAIGHT OUT THE END OF THE WATER BOX.
WATER BOX DRAIN AND VENT LOCATIONS ARE SHOWN ON THE WATER BOX END PLATES.

SHELL TYPE	CONN DIA	CONN TYPE	FLOW DIRECTION
EVAPORATOR	8"	VICTAULIC	IN BOTTOM OUT TOP
CONDENSER	8"	VICTAULIC	IN BOTTOM OUT TOP

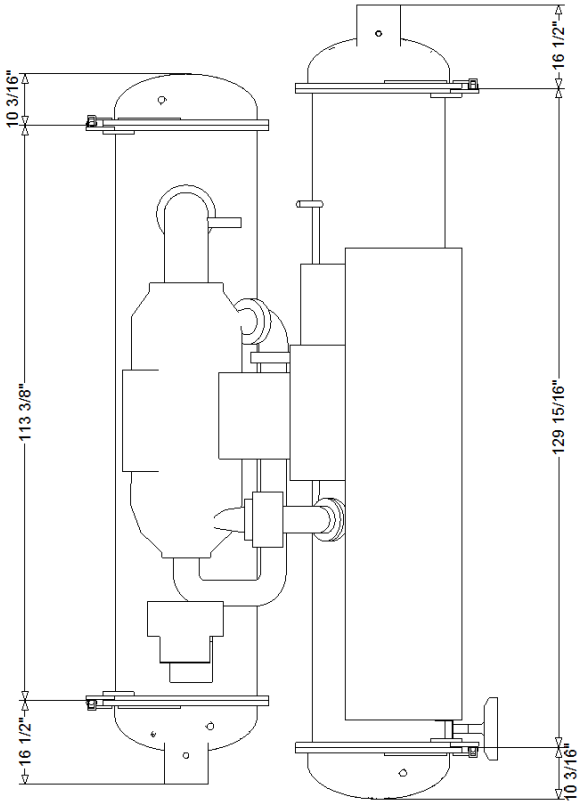

TOP VIEW

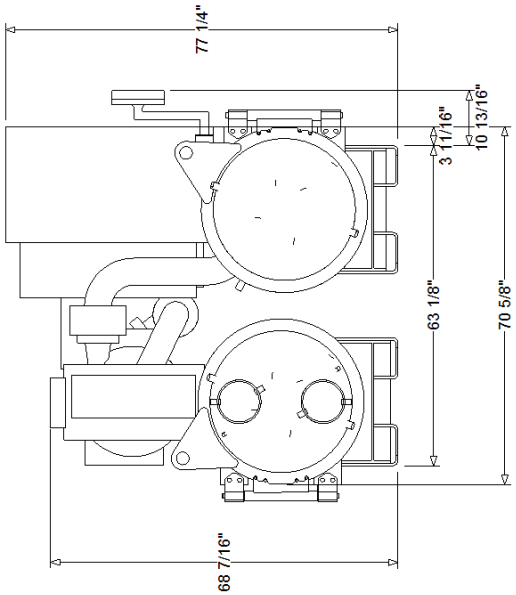

LEFT SIDE VIEW

SHIPPING WEIGHT **	12,664.0 lb
OPERATING WEIGHT	15,136.0 lb
COMPRESSOR SIZE	300
EVAPORATOR SIZE	040A
EVAPORATOR WATERPASS	2
EVAPORATOR WATERBOX ARRANGEMENT	LELE
CONDENSER SIZE	040A
CONDENSER WATERPASS	2
CONDENSER WATERBOX ARRANGEMENT	RERE

* ALL PUBLISHED WEIGHTS ACCURATE TO +/- 10 %
** SHIPPING WEIGHT INCLUDES REFRIGERANT. IF ORDERED WITHOUT, CONSULT PRODUCT SUPPORT FOR DRY SHIP WEIGHT.

⚠ WARNING

1. HEAVY OBJECTS!
   DO NOT USE CABLES (CHAINS OR SLINGS) EXCEPT AS SHOWN. EACH OF THE CABLES (CHAINS OR SLINGS) USED TO LIFT THE UNIT MUST BE CAPABLE OF SUPPORTING THE ENTIRE WEIGHT OF THE UNIT. LIFTING CABLES (CHAINS OR SLINGS) MAY NOT BE OF THE SAME LENGTH. ADJUST AS NECESSARY FOR EVEN LEVELSINGLE POINT LIFT. OTHER LIFTING ARRANGEMENTS MAY CAUSE EQUIPMENT OR PROPERTY-ONLY DAMAGE. FAILURE TO PROPERLY LIFT UNIT MAY RESULT IN DEATH OR SERIOUS INJURY. SEE DETAILS BELOW.
2. IMPROPER UNIT LIFT!
   TEST LIFT UNIT APPROXIMATELY 12 INCHES TO VERIFY PROPER CENTER OF GRAVITY LIFT POINT. TO AVOID DROPPING OF UNIT, REPOSITION LIFTING POINT IF UNIT IS NOT LEVEL. FAILURE TO PROPERLY LIFT UNIT COULD RESULT IN DEATH OR SERIOUS INJURY OR POSSIBLE EQUIPMENT OR PROPERTY-ONLY DAMAGE.
3. ATTACH SAFETY CHAIN OR CABLE AS SHOWN WITHOUT TENSION, NOT AS A LIFTING CHAIN OR CABLE, BUT TO PREVENT THE UNIT FROM ROLLING.
4. DO NOT FORKLIFT THE UNIT TO MOVE OR LIFT.
5. ONLY USE IDENTIFIED LIFTING HOLES PROVIDED ON CHILLER TO ATTACH CABLES (CHAINS OR SLINGS).
6. 36" (900 MM) RECOMMENDED CLEARANCE ABOVE HIGHEST POINT OF COMPRESSOR.
7. FOLLOW NEC SECTION 110 AND OTHER APPLICABLE LOCAL CODES FOR CLEARANCES IN FRONT OF ELECTRICAL ENCLOSURES.
8. SPECIFIC SHIPPING AND OPERATING WEIGHTS OF THE SUBMITTED CHILLER ARE PROVIDED IF THE CENTRIFUGAL CHILLER SELECTION WAS ENTERED IN TOPSS. CONTACT YOUR LOCAL TRANE SALES ENGINEER IF THIS DATA IS REQUIRED.

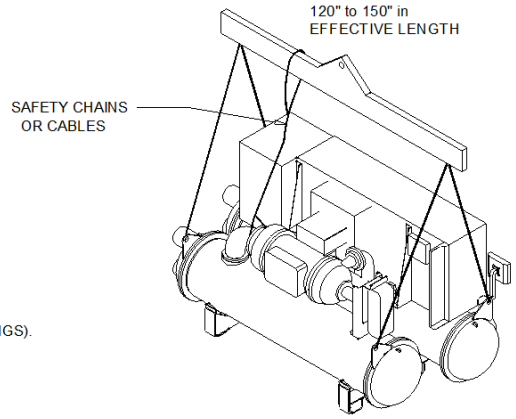

(SEE NOTE 8 ABOVE)	
MAXIMUM SHIPPING	12,664.0 lb
MAXIMUM OPERATING	15,136.0 lb

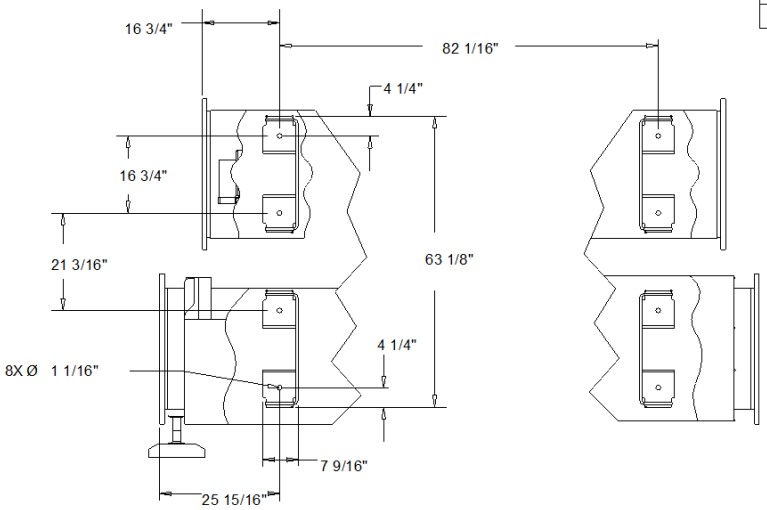

HOLE DETAILS
TOP VIEW

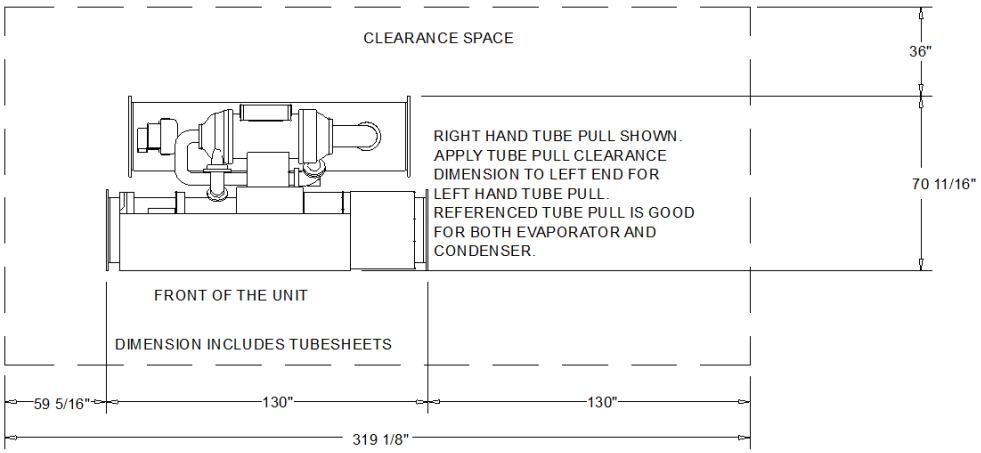

WEIGHTS AND CENTER OF GRAVITY

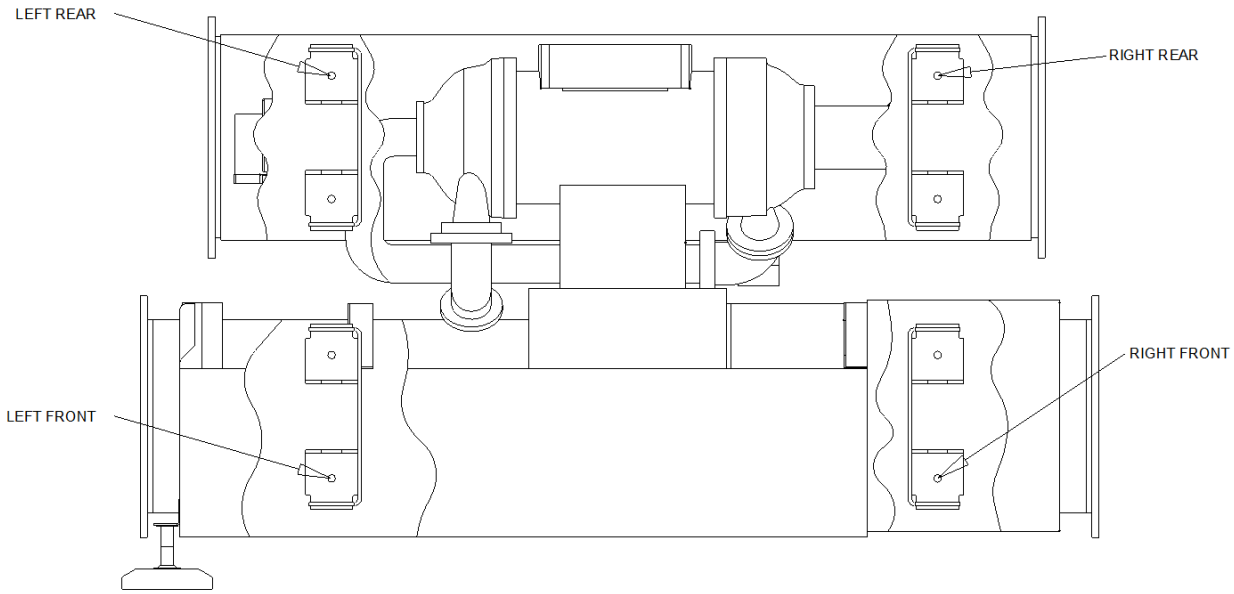

COMPONENT	WEIGHT*
COMPRESSOR WEIGHT	2,735.0 lb
MOTOR WEIGHT	327.0 lb
DRIVE WEIGHT	1,618.0 lb
SUCTION ELBOW WEIGHT	111.0 lb
ECONOMIZER WEIGHT	187.0 lb
EVAPORATOR WEIGHT	2,693.0 lb
EVAPORATOR WATERBOXES WEIGHT	398.0 lb
CONDENSER WEIGHT	3,494.0 lb
CONDENSER WATERBOXES WEIGHT	363.0 lb
MISCELLANEOUS WEIGHT	385.0 lb

UNIT CENTER OF GRAVITY	
CG X (DIMENSION TOWARDS FRONT)	31.000 in
CG Y (HEIGHT DIMENSION FROM FLOOR)	33.000 in
CG Z (DIMENSION FROM RIGHT TO LEFT)	46.000 in

RIGHT FRONT MOUNTING HOLE
BOTTOM OF THIS HOLE IS 0,0,0 POINT
FOR CENTER OF GRAVITY DIMENSIONS

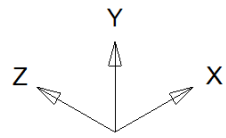

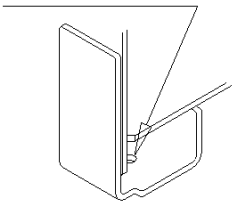

WEIGHTS	
SHIPPING **	OPERATING
12,664.0 lb	15,136.0 lb

NAMEPLATE PRODUCT DESCRIPTION:

MODL	HDWA	VOLT	460	PTON	250.00 tons	NTON	300
EVTM	TMCU	CDTM	TECU	CPKW	441	IMP1	7.598
IMP2	6.535	CDBS	A	EVSZ	040A	EVBS	C
						CDSZ	040A

* ALL PUBLISHED WEIGHTS ACCURATE TO +/- 10 %

** SHIPPING WEIGHT INCLUDES REFRIGERANT. IF ORDERED WITHOUT, CONSULT PRODUCT SUPPORT FOR DRY SHIP WEIGHT.

ADAPTIVE FREQUENCY DRIVE

MAX RLA	BREAKER AIC AMPS	SHORT CIRCUIT WITHSTAND RATINGS (RMS SYMETRICAL AMPS)	LINE CONNECTION LUGS ADAPTIVE FREQUENCY DRIVE	TOTAL DRIVE WEIGHT MINUS SHIPPING PALLET
238	65000	65000	(2) 3/0-250 MCM	1,618.0 lb

THE NON-FUSED DISCONNECT OR CIRCUIT BREAKER IS DESIGNED FOR USE AS A SERVICE DISCONNECT ONLY.

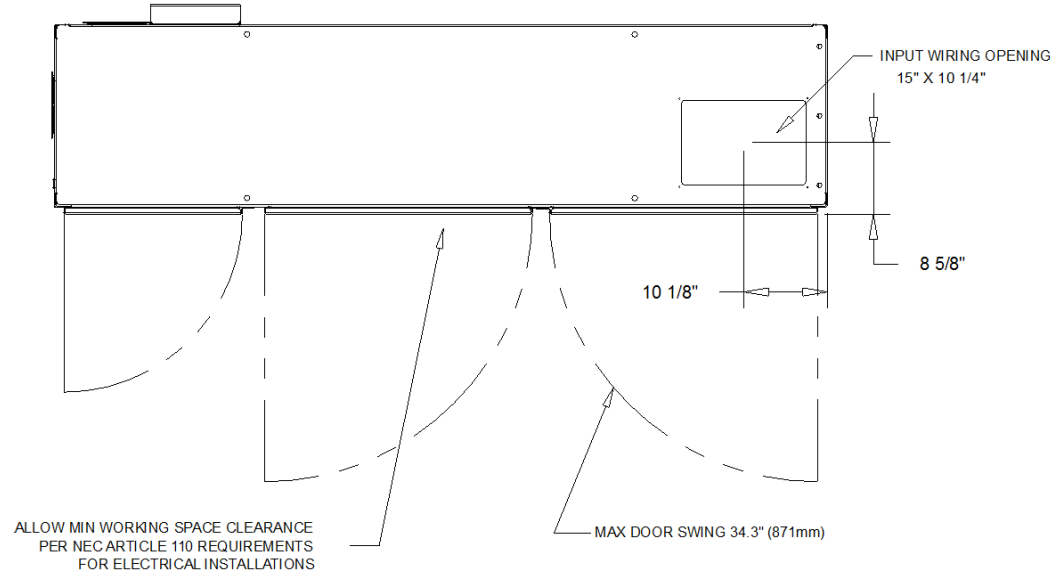

TOP VIEW

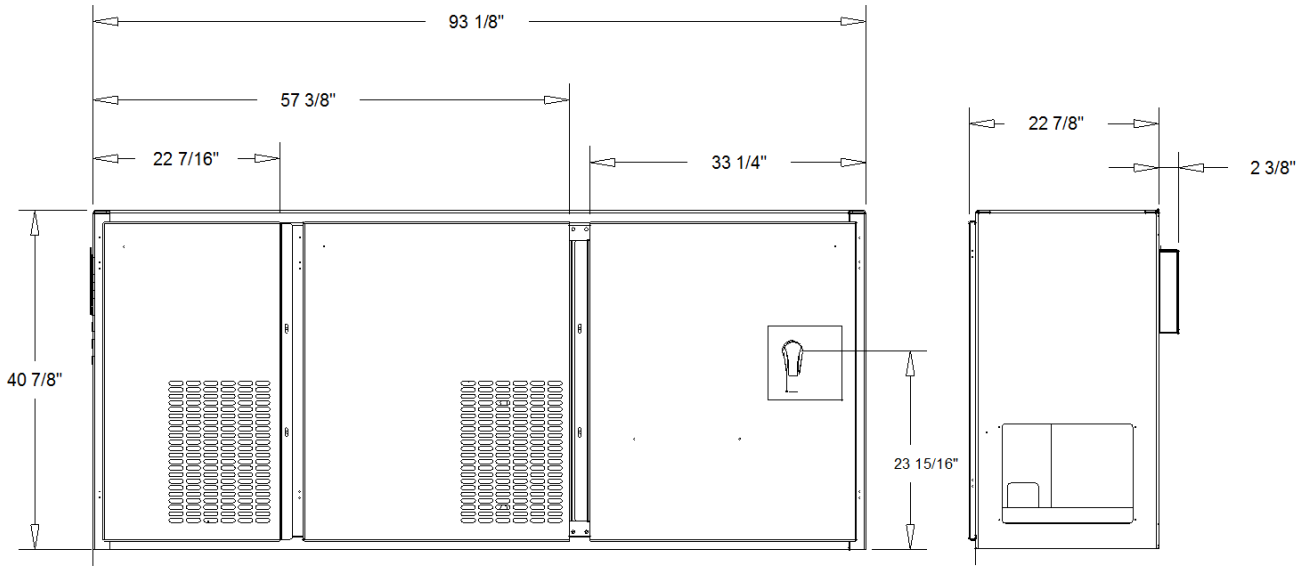

FRONT ELEVATION

RIGHT SIDE ELEVATION

HINGE SWING DETAIL DRAWING

ALL VIEWS ON THIS PAGE ARE TOP VIEWS

DO NOT INSTALL PIPING OR ANY NON-REMOVABLE HARDWARE IN FRONT OF HINGED WATERBOXES/COVERS OR ANY ATTACHED BRACKETS AND HINGES

LEFT END OF COOLING CONDENSER

LEFT HAND RETURN BOX AND HINGE SWING

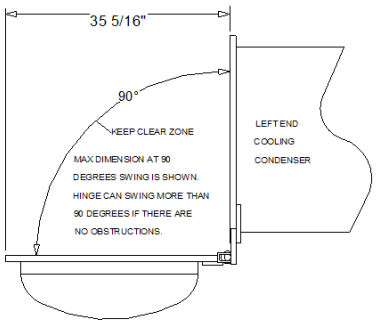

RIGHT END OF COOLING CONDENSER

RIGHT HAND NMAR WATERBOX AND HINGE SWING

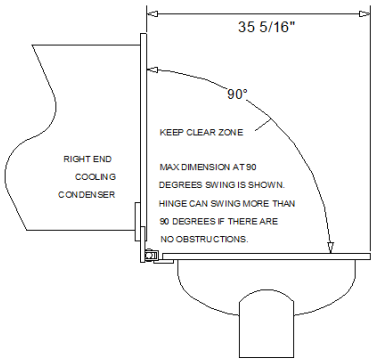

LEFT END OF EVAPORATOR

LEFT HAND NMAR WATERBOX AND HINGE SWING

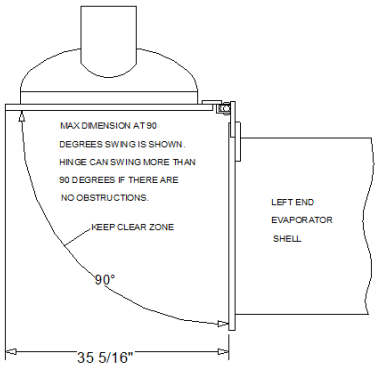

RIGHT END OF EVAPORATOR

RIGHT HAND RETURN BOX AND HINGE SWING

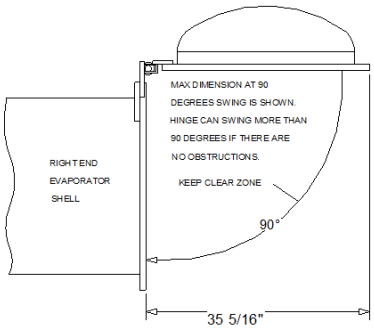

NOTES:
1. DO NOT ROUTE LOW VOLTAGE (30V) WITH CONTROL VOLTAGE (120V) AND DO NOT POWER UNIT UNTIL CHECKOUT AND START UP PROCEDURES HAVE BEEN COMPLETED.
2. RECOMMENDED FIELD WIRING CONNECTIONS ARE SHOWN BY DASHED LINES.
3. ALL FIELD WIRING MUST BE IN ACCORDANCE WITH NATIONAL ELECTRIC CODE AND LOCAL REQUIREMENTS.
4. CLASS 1 FIELD WIRING INSULATION RATING IS REQUIRED TO BE EQUAL TO OR BE GREATER THAN THE EQUIPMENT SUPPLY VOLTAGE RATING. CLASS 2 FIELD WIRING INSULATION IS REQUIRED TO BE RATED AT 300V MINIMUM. ALL CUSTOMER CONTROL CIRCUIT WIRING IS MADE TO CIRCUIT BOARD MOUNTED BOX LUGS WITH A WIRE RANGE OF 14-18 AWG OR TO DIN RAIL MOUNTED SPRING FORCE TERMINALS.
5. ALL UNIT POWER WIRING MUST BE 600 VOLT COPPER CONDUCTORS ONLY. REFER TO UNIT NAMEPLATE FOR MINIMUM CIRCUIT AMPACITY AND MAXIMUM OVERCURRENT PROTECTION DEVICE. PROVIDE AN EQUIPMENT GROUND IN ACCORDANCE WITH APPLICABLE ELECTRIC CODES.
6. UNIT PROVIDED DRY CONTACTS FOR WATER PUMP CONTROL. RELAY RATING AT 120VAC: 7.2 AMPS RESISTIVE, 2.88 AMPS PILOT DUTY, 1/3 HP, 7.2 FLA RELAY RATING AT 240VAC: 5 AMPS GENERAL PURPOSE.
7. TRANE RECOMMENDS WIRING THE 5K1 EVAPORATOR AND 5K2 CONDENSER WATER PUMP CONTROL RELAYS AS SHOWN TO ALLOW THE 1K12 MODULE TO CONTROL PROPER SEQUENCING EVAPORATOR CHILLED WATER PUMP MUST BE CONTROLLED BY THE CHILLER OUTPUT. FAILURE TO DO SO MAY RESULT IN DAMAGE TO THE UNIT.
8. CUSTOMER SUPPLIED CONTACTS FOR ALL LOW VOLTAGE CONNECTIONS MUST BE COMPATABLE WITH DRY CIRCUIT 240 VOLTS DC FOR A 12 mA RESISTIVE LOAD. SILVER OR GOLD PLATED CONTACTS RECOMMENDED.
9. INSTALLATION OF PRIMARY EVAPORATOR AND CONDENSER WATER PROOF OF FLOW DEVICES ARE REQUIRED. THESE ARE INDICATE AS 5S11 AND 5S12.CUSTOMER SUPPLIED DEVICES AND MUST BE A FLOW SENSING DEVICE SUCH AS A FLOW SWITCH, WATER FLOW DETECTION CONTROLLER OR A DIFFERENTIAL PRESSURE SWITCH. PRIMARY EVAPORATOR AND CONDENSER WATER PROOF OF FLOW IS ALSO SHOWN USING OPTIONAL TRANE INSTALLED 1K22 AND 1K23 WATER FLOW DETECTION CONTROLLERS, 4R17 AND 4R18 WATER FLOW DETECTION SENSORS AND WB11 AND WB12 CABLES ARE SUPPLIED BY TRANE FOR FIELD INSTALLATION BY THE CUSTOMER.
10. CUSTOMER SUPPLIED SECONDARY EVAPORATOR AND CONDENSER WATER PROOF OF FLOW DEVICES ARE AT THE DISCRETION OF THE CUSTOMER. THESE ARE INDICATED AS 5S17 AND 5S18 AND MAY BE A WATER PUMP INTERLOCK, VALVE END SWITCH OR ANY OTHER PROOF OF FLOW DEVICE. TRANE RECOMMENDS INSTALLATION OF THE 5S17 SECONDARY EVAPORATOR WATER PROOF OF FLOW DEVICE WHEN THE LEAVING WATER TEMPERATURE IS EXPECTED TO BE 38°F OR LESS AND THAT THE METHOD USED IS INDEPENDENT OF THE PRIMARY WATER PROOF OF FLOW DEVICE TO PROVIDE REDUNDANCY.
11. IF OPTIONAL TRANE INSTALLED 1K22 AND/OR 1K23 WATER FLOW DETECTION CONTROLLERS ARE USED AND THE CUSTOMER CHOOSES TO INSTALL 5S17 AND/OR 5S18 SECONDARY PROOF OF FLOW DEVICES THEN THE CUSTOMER MUST REMOVE TRANE FACTORY WIRE BETWEEN 1K1-2 AND 1K23-4 AND/OR WIRE BETWEEN 1K1-3 AND 1K22-4. SECONDARY DEVICES WOULD THEN BE INSTALLED AS SHOWN. REFER TO THE UNIT SCHEMATIC WIRING DIAGRAM.

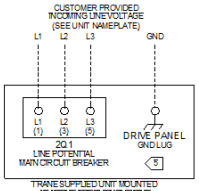

NOTE: ANY 1K13 OR 1K14 DEFAULT OUTPUT MY BE REPROGRAMED TO ANY ALTERNATE ALARM/STATUS OUTPUT SHOWN BELOW.
OPTIONAL 5H15 CHILLER ALARM INDICATOR

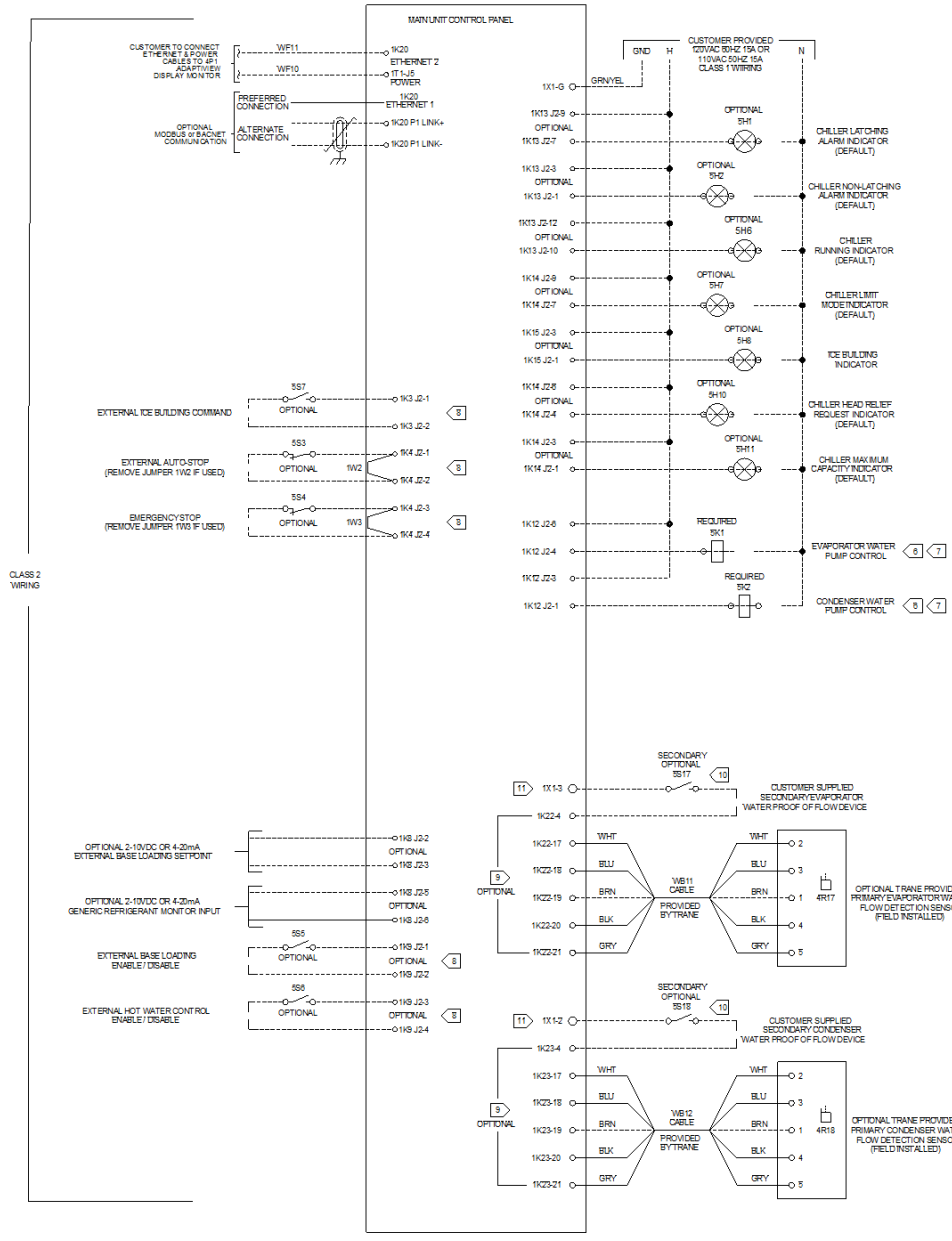

FUSE REPLACEMENT TABLE		
DEVICE ID	FUSE TYPE	FUSE SIZE
2F1	CLASS CC	15A
2F2	CLASS CC	15A
2F3	CLASS CC	10A
2F4	CLASS CC	10A
2F5	CLASS CC	5A
2F7	CLASS CC	5A
2F8	CLASS CC	20A
2F11	BUSSMANN - 170M3467	315A
2F12	BUSSMANN - 170M3467	315A

DEVICE PREFIX LOCATION CODES	
1	CONTROL PANEL
2	DRIVE PANEL
4	UNIT MOUNTED DEVICE
5	CUSTOMER PROVIDED DEVICE

⚠ WARNING
HAZARDOUS VOLTAGE!
DISCONNECT ALL ELECTRIC POWER INCLUDING REMOTE DISCONNECTS AND FOLLOW LOCKOUT AND TAG PROCEDURES BEFORE SERVICING. ENSURE THAT ALL MOTOR CAPACITORS HAVE DISCHARGED BEFORE SERVICING. UNITS WITH VARIABLE SPEED DRIVE, REFER TO DRIVE INSTRUCTIONS FOR CAPACITOR DISCHARGE.
FAILURE TO DO THE ABOVE BEFORE SERVICING COULD RESULT IN DEATH OR SERIOUS INJURY.

⚠ AVERTISSEMENT
TENSION DANGEREUSE!
COUPER TOUTES LES SOURCES D'ALIMENTATION ELECTRIQUE, Y COMPRIS LES TELECOMMANDES, AVANT D'EFFECTUER LES PROCEDURES DE VERROUILLAGE ET DE MISE ETIQUETTES AVANT TOUTE INTERVENTION. VERIFIER QUE TOUS LES CONDENSATEURS DES MOTEURS SONT DECHARGES. DANS LE CAS D'UNITES COMPORTANT DES ENTRAINEMENTS A VITESSE VARIABLE, SE REPORTER AUX INSTRUCTIONS DE L'ENTRAINEMENT POUR DECHARGER LES CONDENSATEURS.
NE PAS RESPECTER CES MESURES DE PRECAUTION PEUT ENTRAINER DES BLESSURES GRAVES POUVANT ETRE MORTELLES.

⚠ ADVERTENCIA
¡VOLTAJE PELIGROSO!
DESCONECTE TODA LA ENERGIA ELECTRICA, INCLUIDAS LAS DESCONEXIONES REMOTAS Y SIGA LOS PROCEDIMIENTOS DE CIERRE Y ETIQUETADO ANTES DE PROCEDER AL SERVICIO. ASEGURESE DE QUE TODOS LOS CAPACITORES DEL MOTOR HAYAN DESCARGADO EL VOLTAJE ALMACENADO. PARA LAS UNIDADES CON E.A. DE DIRECCION DE VELOCIDAD VARIABLE, CONSULTE LAS INSTRUCCIONES DEL DISPOSITIVO PARA DESCARGAR LOS CONDENSADORES.
EL NO REALIZAR LO ANTERIORMENTE INDICADO, PODRIA OCASIONAR LA MUERTE O SERIAS LESIONES PERSONALES.

CAUTION
USE COPPER CONDUCTORS ONLY!
UNIT TERMINALS ARE NOT DESIGNED TO ACCEPT OTHER TYPES OF CONDUCTORS.
FAILURE TO DO SO MAY CAUSE DAMAGE TO THE EQUIPMENT.

ATTENTION
N'UTILISER QUE DES CONDUCTEURS EN CUIVRE!
LES BORNES DE L'UNITE NE SONT PAS CONÇUES POUR RECEVOIR D'AUTRES TYPES DE CONDUCTEURS.
L'UTILISATION DE TOUT AUTRE CONDUCTEUR PEUT ENDOMMAGER L'APPAREIL.

PRECAUCIÓN
¡UTILICE ÚNICAMENTE CONDUCTORES DE COBRE!
LAS TERMINALES DE LA UNIDAD NO ESTAN DISEÑADAS PARA ACEPTAR OTROS TIPOS DE CONDUCTORES.
SI NO LO HACE, PUEDE OCASIONAR DAÑO AL EQUIPO.

General
The chiller is completely factory-packaged including the compressor, motor, evaporator, condenser, unit controller, economizer, and all interconnecting chiller piping and wiring. A control power transformer is standard and supplies all the auxiliary power needs for chiller mounted devices. The adaptiview frequency drive (AFD) is integral to the chiller as standard.

Compressor-Motor
Direct drive multiple-stage compressor, single-stage capacity control guide vanes. Dynamically balanced shrouded aluminum alloy impellers. Refrigerant cooled, hermetically sealed, two-pole motor.Two magnetic bearings support the rotating assembly. Fully integrated magnetic bearing controller.

Evaporator-Condenser
Shells are carbon steel plate. Evaporator and condenser include relief devices per ASME Section VIII, Div.1 / ASHRAE 15 Safety Code. Carbon steel tube sheets are drilled, reamed and grooved to accommodate tubes. Tubes are individually replaceable externally finned seamless copper. Tubes are mechanically expanded into tube sheets. A multiple orifice control system maintains proper refrigerant flow. Condenser baffle prevents direct impingement of compressor discharge gas upon the tubes. Refrigerant side of the assembled unit is tested at both pressure (300.00 psi condenser / 200.00 psi evaporator leak test) and vacuum. Water side is hydrostatically tested at one and one-half times design working pressure; but not less than 225.00 psi.

Trane reserves the right to implement chiller technology enhancements that will reduce the chiller's refrigerant charge, with no impact on chiller performance. Changes may be reflected in the chillers nameplate refrigerant charge and the quantity of refrigerant charge shipped in the unit or to the jobsite, depending upon the final date of equipment manufacture.

Water Boxes
Drains and vents - Water boxes typically have 3/4-inch NPTI vents and drain connections provided. Evaporators and condensers have one vent and one drain. If grooved connections are offered, the design is based on Style 77.

Economizer
A thermal economizer with no moving parts provides power saving capability.

Evaporator Proof of Flow - Thermal Dispersion
A factory provided, field installed thermal dispersion type proof of flow switch (IFM) is provided. The thermal dispersion controller is mounted in the chiller control panel. The piping probe and wiring is shipped lose for field installation in the ship with components box. Follow the installation instructions in the chiller installation manual. Reference specific IFM installation manual (PART- SVN223*-EN) notes shipped with your flow switch or contact local Trane sales office.

Condenser Proof of Flow - Thermal Dispersion
A factory provided, field installed thermal dispersion type proof of flow switch (IFM) is provided. The thermal dispersion controller is mounted in the chiller control panel. The piping probe and wiring is shipped lose for field installation in the ship with components box. Follow the installation instructions in the chiller installation manual. Reference specific IFM installation manual (PART- SVN223*-EN) notes shipped with your flow switch or contact local Trane sales office.

Enhanced Flow Management Package
This provides enhanced variable flow control and compensation and adds flow fields on the AdaptiView display. The flow compensation component enhances the unit controllers variable flow rate of change capabilities from 30% per minute to up to 50% per minute. Included are factory mounted differential water pressure sensors for both the evaporator and condenser. Differential pressure switches or some other means to prove flow for the control are still required. Max pressure rating for the pressure sensors is 365 psig.

The following additional fields will be displayed on the unit controller:
Evaporator differential water pressure
Condenser differential water pressure
Evaporator Tons
Due to their accuracy, these parameters are not designed to be used for detailed metering or analysis

AdaptiView Control Panel
The Tracer (TM) AdaptiView is a microprocessor-based chiller control system that provides complete stand alone system control and monitoring for the water cooled Agility (TM). It is a factory mounted package including a full complement of controls to safely and efficiently operate the Agility chiller, including interface to the starter, and comprehensive motor protection. Inlet and outlet water (fluid) temperature sensors are located in the evaporator and condenser water box connections as standard.

The display is a touch sensitive 12 1/8" diagonal color liquid crystal display (LCD) that uses color graphics and animation to ensure ease of use. The touch sensitive interface allows the operator to view the chiller graphically and receive a status indication via subsystem animations. The operator can navigate easily between the primary chiller subsystems including: compressor, evaporator, condenser, and motor. For each subsystem, you can view status and detailed operating parameters. In addition, alarms, reports, trending, and settings can all be accessed quickly from the main screen. The display is mounted on a flexible "arm" that allows extensive height and viewing angle variations.

The panel supports an extensive list of languages including the default English.The data can be set to be viewed in inch pounds IP or metric units SI. Class 1 control panel voltage (30-115V) is clearly labeled. Class 2 input voltage (30V max) is also labeled.

Operating Data Including:
*operating hours
*number of starts
*chilled water setpoint
*evaporator and condenser water flow status
*evaporator entering and leaving water temperatures
*evaporator saturated refrigerant temperatures
*evaporator approach temperatures
*evaporator refrigerant pressure
*condenser entering and leaving water temperatures
*condenser saturated refrigerant temperatures
*condenser approach temperatures
*condenser refrigerant pressure
*AFD average motor current %RLA
*motor winding temperatures
*AFD output power

The AdaptiView also contains the following dedicated reports:
Evaporator, Condenser, Compressor Motor, and ASHRAE. Each report is comprised of a detailed listing of operational data relative to that chiller subsystem.

Control Functions Including:
*leaving chilled water temperature
*percent demand limit
*chiller water reset (based on return water temperature)
*front panel control type
*setpoint source
*differential to start
*differential to stop

Status Data Including:
*waiting to start
*running
*run limit
*run inhibit (adaptive)
*auto
*preparing shutdown
*shutting down
*stopped

Safeties Including:
Automatic safety shutdown for:

*low chilled water temperature
*low evaporator refrigerant pressure
*high condenser refrigerant pressure
*evaporator and condenser flow status
*high motor temperature
*AFD function faults
*critical temperature and pressure sensor faults
*AFD motor current overload

The devices are of a latching trip out type requiring manual reset. Non-latching safety trip outs for operating conditions external to the chiller automatically permits unit to resume normal operation when condition is corrected.

Surge protection - avoids surge by changing operating conditions through speed and inlet guide vane adjustments. Head relief through lowering cooling tower water temperature can be requested. If not corrected within 7 minutes, chiller is shut down.

Enhanced Adaptive Control(TM) - built in intelligence to keep the chiller on line (safely making maximum tons) while simultaneously preventing chiller damage/failure. During any chiller limiting mode of operation, the control panel enunciates the condition via a relay output.

Trending
The controller provides 10 standard graphs for trending multiple parameters. The operator can add an additional 6 customer graphs if desired. On any one custom graph, the operator can choose to trend up to 10 unique parameters from a more comprehensive list. Two Y axes are available for any graph to facilitate readability.

Diagnostics
AdaptiView includes comprehensive diagnostic monitoring. All active diagnostics are available, and up to 20 historic diagnostics are communicated to the operator via the 12 1/8" LCD display with graphic navigation system. Each diagnostic is time and date stamped.

Security
The AdaptiView can be set to prevent unauthorized access to the chiller settings. The operator can choose to secure the operating settings with a password. Data and reports can still be accessed once the settings are locked out.

The memory for the AdaptiView is non-volatile type, so if power is lost, operating settings are retained. A life time battery is standard, which is used only to support the clock function for the chiller.

Chilled and Condenser Water Pump Relays
Chilled water and condenser water pump relays are provided and it is recommended that they be used for pump control.

Operating Status
The following hardwire binary outputs are available:
Compressor running relay
Alarm relay - manual reset
Alarm relay - auto reset
Head relief request relay
Maximum capacity relay
AFD interrupt failure

Paint
All Agility(TM) painted surfaces are coated with a primer and an air-dry beige primer-finisher prior to shipment.

Isolation
All units ship with neoprene isolator pads as standard. Enough pads are provided to cover the area under the chiller supports.

Shipment
All units are of hermetic design, leak tested, factory charged with refrigerant, or charged to 5.00 psi dry nitrogen and shipped as a single factory assembled package. The entire chiller is shrink wrapped for protection.

AFD Design Features:
*NEMA 1 ventilated enclosure with hinged, locking door is tested to a short circuit rating of 65,000 Amps. It includes a padlock-able door-mounted circuit breaker/shunt trip with AIC rating of 65,000 Amps. The circuit breaker is interlocked with the enclosure door. The entire package is UL/CUL listed.
*Simple modular construction
*The drive is rated for maximum 480/60/3 input power, +/-10%, or as an option 600/60/3
*Displacement power factor of 0.98 at full load and 0.96 at part load.
*Minimum efficiency of 97% at rated load
*Full motor voltage (460/480 +/- 10%) is applied regardless of the input voltage
*Soft-start; linear acceleration; coast to stop
*Adjustable output frequency from 100 to 308 hertz
*All control circuit voltages are physically and electrically isolated from power circuit voltage
*150% instantaneous torque available for improved surge control
*Output line-to-line and line-to-ground short circuit protection

*Optional harmonic attenuation - integrated passive control of the building AC power assures low line -generated harmonics back to the user's power grid. The AFD has less than or equal to 5% current total demand distortion (TDD) as measured at the AFD. This is based on an electrical system with voltage distortion less than 1.5%

Required Installer Responsibilities

The following are considered functions normally required of the equipment installer.

-Install unit on a foundation with flat support surfaces level within 1/16" and of sufficient length to support concentrated loading. (Spring isolators should be considered whenever chiller installation is planned for an upper story location).

-Place isolation pads provided by the chiller manufacturer under the unit. When spring isolators are chosen, no pads are provided.

-Install unit per applicable Trane Installation Manual.

-Complete all water and electrical connections.

-Where specified, provide and install valves in water piping upstream and downstream of the evaporator and condenser water boxes as means of isolating shells for maintenance and to balance and trim system.

-Furnish and install a flow switch or equivalent device in both the chilled water and condenser water piping properly interlocked to insure that the unit can operate only when waterflow is established.

-Furnish and install taps for thermometers and pressure gauges in water piping adjacent to inlet and outlet connections of both evaporator and condenser.

-Furnish and install drain valves to each water box.

-Install vent cocks on each water box.

-Furnish and install strainers upstream of chiller evaporator and condenser bundles to protect tubes from potential damage caused by debris in the circulating water. Note: Failure to install strainers in all water piping entering the chiller could result in tube plugging conditions that could damage unit components. If the circulating pumps are immediately upstream of the chiller bundles, then the strainer can be installed immediately ahead of the pumps.If the circulating pumps are downstream of the chiller bundles, then the strainers should be installed immediately ahead of the chiller bundles.

-Furnish sufficient refrigerant of 25 lb. per machine and dry nitrogen of 50.0 lb. per machine for pressure testing under manufacturer's supervision.

-Start-up unit under supervision of qualified Trane field engineer.

-Where specified, insulate evaporator and any other portions of the machine required to prevent sweating under normal operating conditions.

-Water connection piping must not transfer forces to the chiller. Because of cumulative tolerances in manufacture and field installation, pre-piping of water connections closer than 36" is not recommended. Any problems associated with pre-piping of water connections closer than 36" to the chiller are the responsibility of the installing contractor.

-Furnish and install vent lines for evaporator and condenser relief devices venting to atmosphere per ASHRAE 15 and unit installation manual.

Field Disassembly

With chillers that may require field disassembly (for example due to clearance concerns during unit installation), reference the Disassembly and Reassembly manual and your Trane Sales representative prior to the order being placed. Caution: if certain components are removed in the field, for example the economizer, the necessary components (gaskets, seals, etc.) are not provided as standard.

Agility Condenser WPD Curve

Pressure Drop Curve

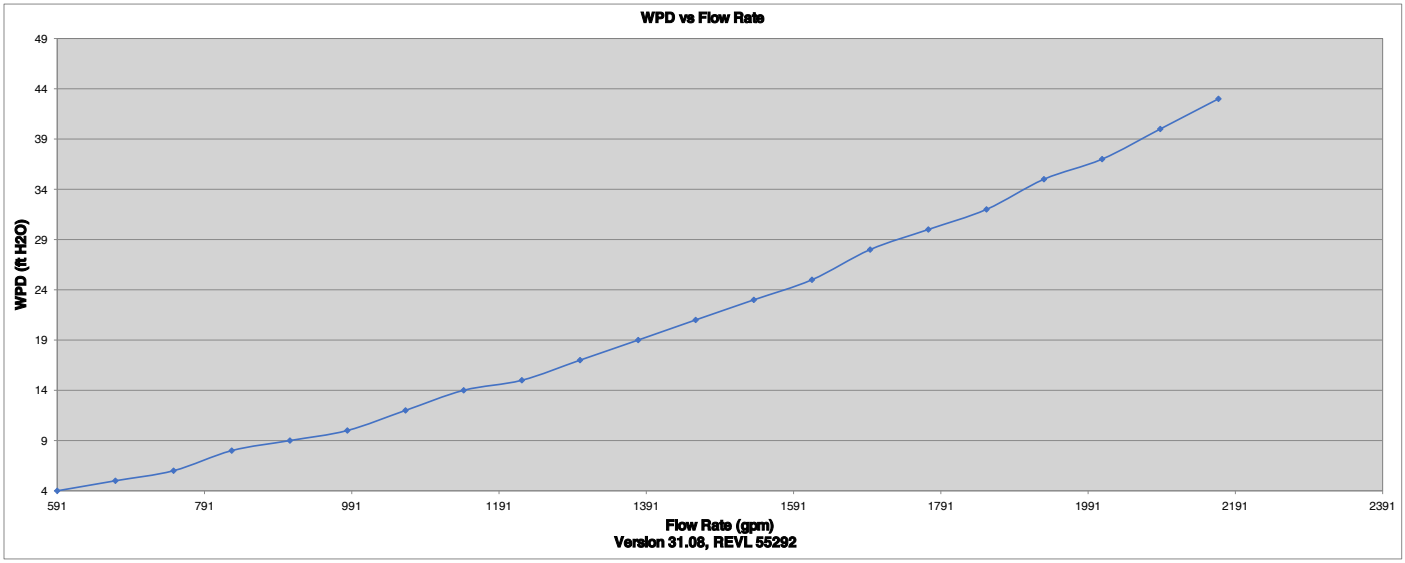

Flow Rate Table

Flow Rate (gpm)	WPD (ft H2O)
591	4
670	5
749	6
828	8
907	9
985	10
1064	12
1143	14
1222	15
1301	17
1380	19
1458	21
1537	23
1616	25
1695	28
1774	30
1853	32
1931	35
2010	37
2089	40
2168	43

Unit Configuration

SRTY-UAFD	EVFP-TDFS	TEST-NONE
MODL-HDWA	EVVF- NO	TTOL- NA
TYPE-SNGL	HGEV-HGBT	ASTT- NO
LQDD- NO	CDSZ-040A	ASKT-NONE
LQDP- NO	TSTY-STD	OPMM-KWTN
NTON-300	AH19-COMP	INSL- NO
IVLT-460	AH22-COMP	EXOP-YES
IHRZ- 60	CTSP-NONE	TRMM-BCNT
VOLT-460	CDBS- A	WPSR-WFC
HRTZ- 60	CDTM-TECU	CRFG-R513
RCTP- NO	CDTC-283	RLDV-SPLD
CPKW-441	CDTH- 25	ACOU-YES
FRAM- T1	CDWP- 2	
DSOP- NO	CDFP-TDFS	
EVSZ-040A	HGCD-HGBT	
ETSP-NONE	EXEV-400	
EVBS- C	RCRQ-NONE	
EVTM-TMCU	AH13-COMP	
EVTC-280	AH16-COMP	
EVTH- 25	ARCL-CERT	
EVWP- 2	FTST-YES	

Agility Evaporator WPD Curve

Pressure Drop Curve

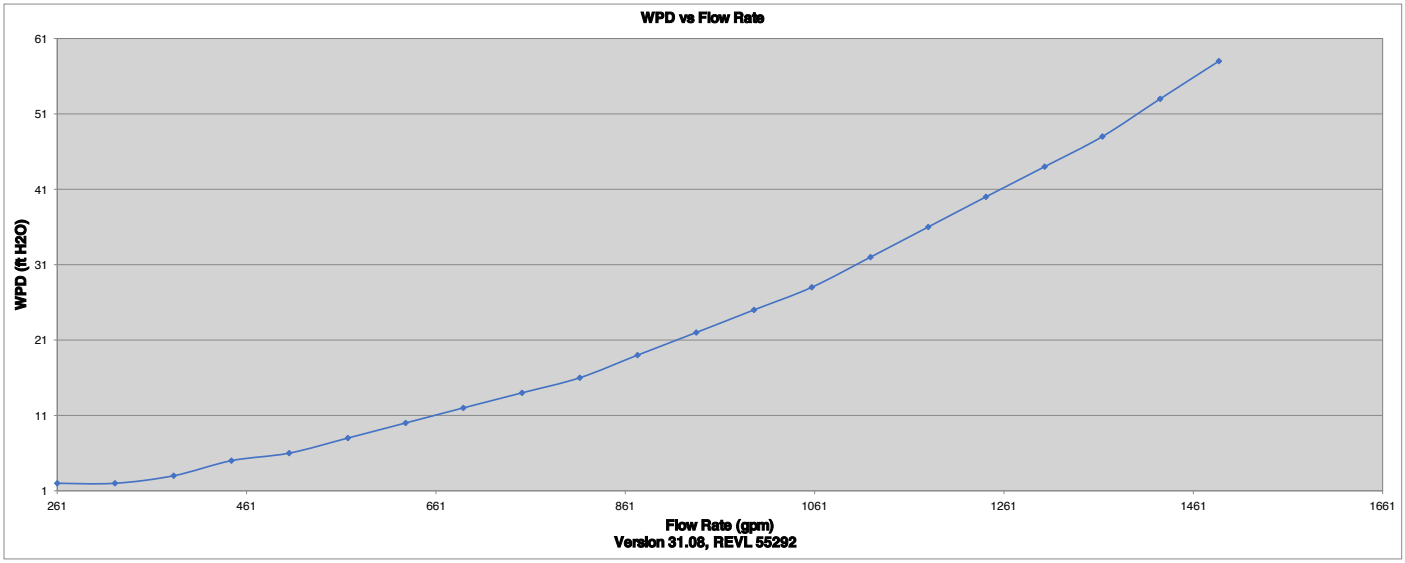

Flow Rate Table

Flow Rate (gpm)	WPD (ft H2O)
261	2
322	2
384	3
445	5
506	6
568	8
629	10
690	12
752	14
813	16
874	19
936	22
997	25
1058	28
1120	32
1181	36
1242	40
1304	44
1365	48
1426	53
1488	58

Unit Configuration

SRTY-UAFD	EVFP-TDFS	TEST-NONE
MODL-HDWA	EVVF- NO	TTOL- NA
TYPE-SNGL	HGEV-HGBT	ASTT- NO
LQDD- NO	CDSZ-040A	ASKT-NONE
LQDP- NO	TSTY-STD	OPMM-KWTN
NTON-300	AH19-COMP	INSL- NO
IVLT-460	AH22-COMP	EXOP-YES
IHRZ- 60	CTSP-NONE	TRMM-BCNT
VOLT-460	CDBS- A	WPSR-WFC
HRTZ- 60	CDTM-TECU	CRFG-R513
RCTP- NO	CDTC-283	RLDV-SPLD
CPKW-441	CDTH- 25	ACOU-YES
FRAM- T1	CDWP- 2	
DSOP- NO	CDFP-TDFS	
EVSZ-040A	HGCD-HGBT	
ETSP-NONE	EXEV-400	
EVBS- C	RCRQ-NONE	
EVTM-TMCU	AH13-COMP	
EVTC-280	AH16-COMP	
EVTH- 25	ARCL-CERT	
EVWP- 2	FTST-YES	

SECTION 23 40 04
AIR COOLED CHILLERS

PRO-FORMA SUBMITTAL DOCUMENTS

FOR

PERFORMANCE OF AIR COOLED CHILLERS

(ATTACHED)

- - - E N D - - -

ACR Product Report

General

Model	Air-Cooled Screw Chiller
Elevation	0.00 ft
Nominal Capacity	250 Nominal Tons
Capacity	250.00 tons
Cooling Efficiency	10.646 EER (Btu/W-h)
IPLV	19.906 EER (Btu/W-h)
Unit Voltage	460 Volt/60Hz/3Phase
Factory Charge	Refrigerant Charge R513A
Number of Refrigerant Circuits	2
Agency Listing	UL Listed to US/Canadian Safety Std
Model Series	Series "C" Model



Evaporator Information

Evaporator Application	Standard Cooling
Evap Fouling Factor	0.000100 hr-sq ft-deg F/ Btu
Evaporator Pass	Chil 2-pass
Flow Switch Set Point	Flow Switch Set Point 45cm/sec
Design Flow	597.45 gpm
Evap Head Loss	14.12 ft H2O
VPF Min Flow	298.72 gpm

Fluid Properties	
Fluid Type	Evaporator Standard Tube
Fluid Freeze Point	32.00 F
Entering Fluid Temperature	54.00 F
Leaving Fluid Temperature	44.00 F

Condenser

Unit Application	Long Life Alloy Aluminum Coil
Fan Type	EC Condenser Fan Motors

Ambient Air Temp	95.00 F
Number of Fans - Total Installed	10.00 Each
Condenser Length	5V Condenser Coil Modules

Pumps - System Fluid Pump Information

Pump Option	No Pump Included

Electrical Information

Single Point Power	
Voltage	460 Volt/60Hz/3Phase
Unit Power	281.78 kW
Compressor Starter	Variable Frequency Drive (1 Compr/CKT)
Incoming Unit Power Line Connection	Single Point Unit Power Connection
Short Circuit Current Rating	10000. A
Harmonic Filter	Reactor (>30% TDD)
FLA - Condenser Fans (each)	2.70 A
MCA	
Single Point Power	504.43 A
MOP	
Single Point Power	700.00 A

RLA/MRC	
Compressor 1A - VFD Input	208.50 A
Compressor 2A - VFD Input	211.70 A

Full Load Sound

Unit Sound Level	InvisiSound Standard w/ Noise Reduction
A-Weighted Sound Pressure at Full Load	76 dBA

A-Weighted Sound Power at Full Load	104 dBA

Physical Information

Dimensions		Weight	
Length	285.100 in	Operating weight	15100. lb
Width	87.810 in	Shipping weight	14900. lb
Height	98.380 in		

Circuits	Refrigerant Charge	Oil Charge
Circuit 1	194 lb	3.50 gal
Circuit 2	194 lb	3.50 gal

Standard Rating Performance and Information for LEED Rating

Refrigerant Charge - ckt 1	194 lb
Refrigerant Charge - ckt 2	194 lb
Rated Refrigerating Capacity	241.33 tons
Rated Cooling Efficiency	10.891 EER (Btu/W-h)
Rated IPLV	19.906 EER (Btu/W-h)
Refrigerating Capacity	250.00 tons
Cooling Efficiency	10.646 EER (Btu/W-h)
Compressor Power	261.98 kW
Fan Power	19.41 kW

ASHRAE 90.1 - 2019

This product meets the minimum efficiency requirements of ASHRAE Standard 90.1 (which are based on AHRI standard rating conditions with water) and, therefore, also meets the LEED "Minimum Energy Performance" prerequisite in the Energy and Atmohphere section.

The LEED Green Building Rating System™, developed by the U.S. Green Building Council, provides indepenent, third-party verification that a building project meets green building and performance measures.

Regulatory Compliance

AHRI Certified

“Certified in accordance with the AHRI Air-Cooled Water-Chilling Packages Certification Program, which is based on AHRI Standard 550/590 (I-P) and AHRI Standard 551/591 (SI). Certified units may be found in the AHRI Directory at www.ahridirectory.org”



Publication

Data Generation Date	10/31/2024
Trane Select Assist Version Number	288

250 NOMINAL TONS
Water Volume 26.6 Gallons/100.6 L
Shipping Weight 14,900 lb
Weight Tolerance +/- 10%
Incoming Power Dimensions 11 13/16" X 9 13/16"
TSA Version 288 Data Generation N/A
Dimensional Tolerance +/- 1/4"

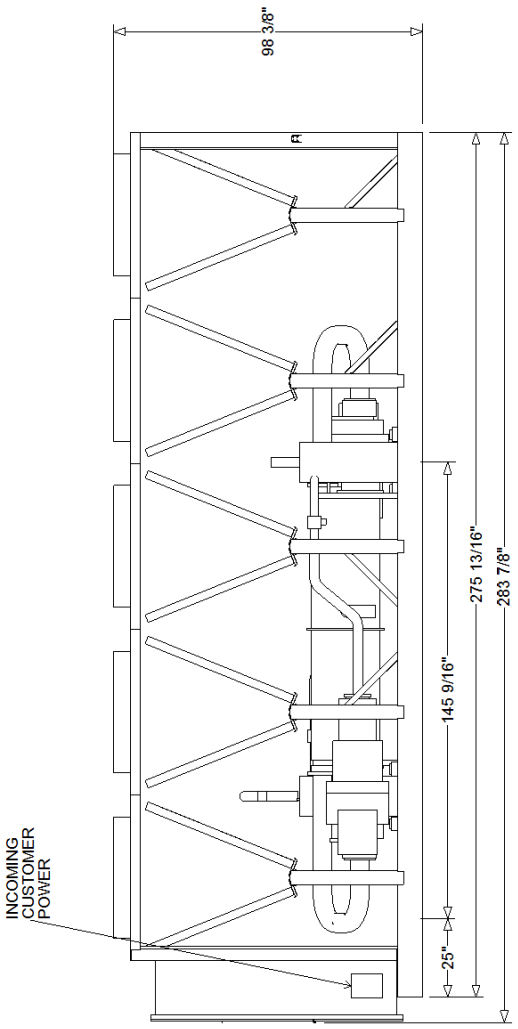

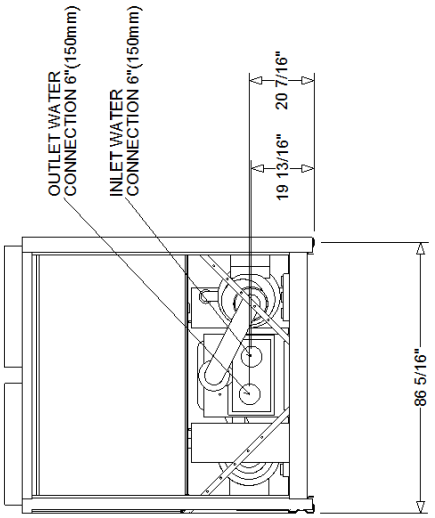

UNITS WITH LOUVER PANELS, ADD 1 1/4" TO UNIT LENGTH

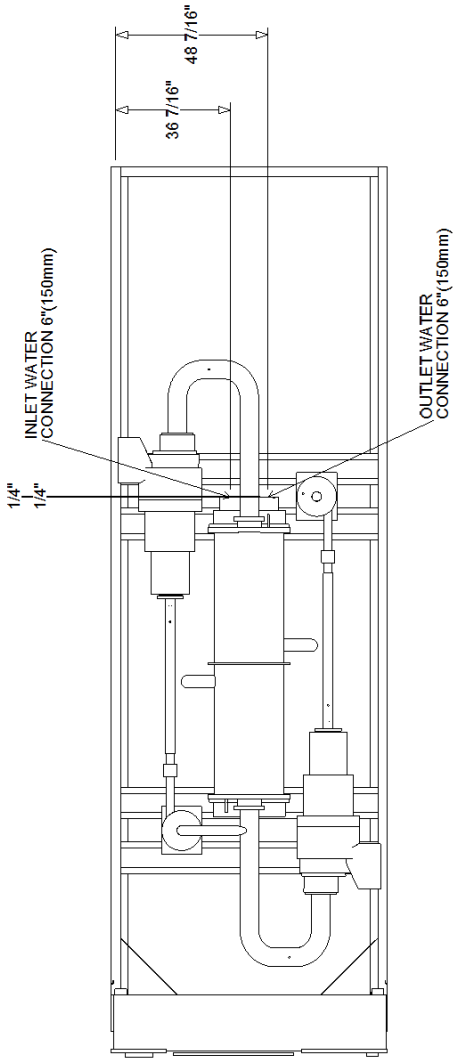
48 7/16"
36 7/16"
INLET WATER CONNECTION 6"(150mm)
OUTLET WATER CONNECTION 6"(150mm)
1/4"
1/4"

NOTES:
1. DO NOT FORK LIFT UNIT.
2. KEEP UNIT LEVEL WHEN LIFTING.
3. WEIGHT IS TYPICAL FOR UNITS WITH REFRIGERANT CHARGE.
4. WEIGHT IS TYPICAL FOR UNITS WITHOUT LOUVER PANELS.
5. DIAGRAM IS A GENERIC REPRESENTATION OF THE UNIT.
6. SPREADER BAR(S)/LIFTING RIG IS 96"IN WIDTH.
7. THE MAXIMUM RIGGING ANGLE AT EACH CHILLER LIFT POINT IS 30 DEGREE FROM VERTICAL.

TOTAL SHIPPING/LIFTING WEIGHT: 14,900 lb

WARNING
LIFTING AND MOVING INSTRUCTIONS

Use the spreader bar as shown in the diagram. Refer to installation instructions located inside the control panel for further rigging information.

Other lifting arrangements could result in death, serious injury or equipmnet damage.

DO NOT ALLOW LIFTING STRAPS TO CONTACT THE UNIT DURING LIFT.

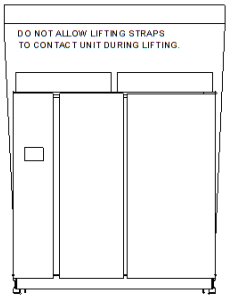

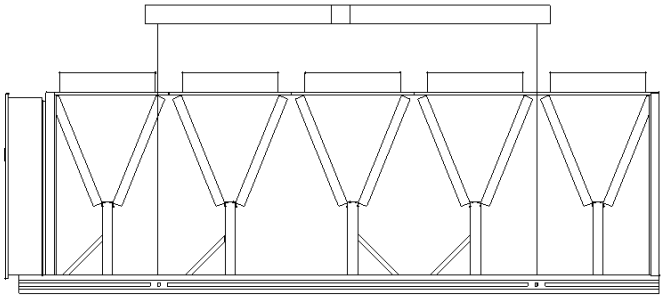

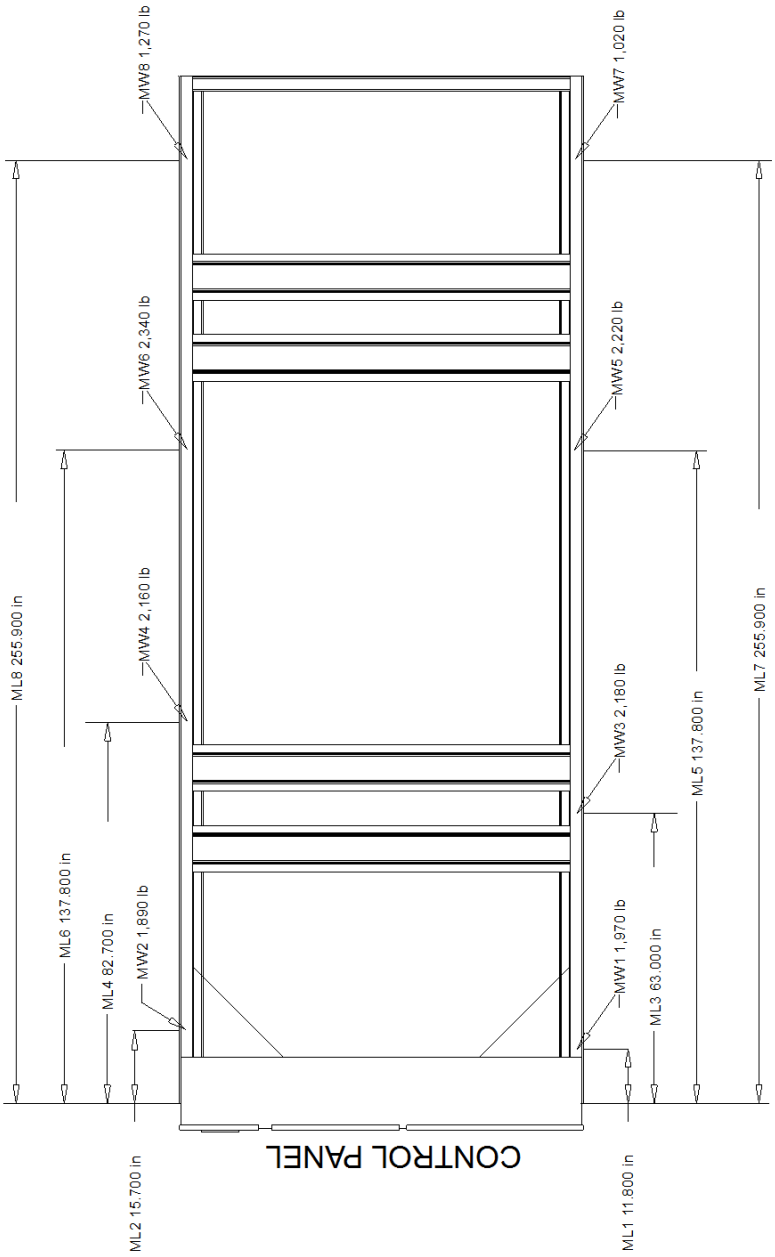

TOTAL OPERATING WEIGHT 15,100 lb
MOUNTING HOLE DIAMETER 9/16"
DIMENSIONAL TOLERANCE (MOUNTING LOCATIONS) +/- 1"
WEIGHT TOLERANCE +/- 10%
UNIT BASE NOT TOO SCALE - REPRESENTATION ONLY

Location 1-6 ISOLATORS NOT SELECTED
Location 7-8 ISOLATORS NOT SELECTED

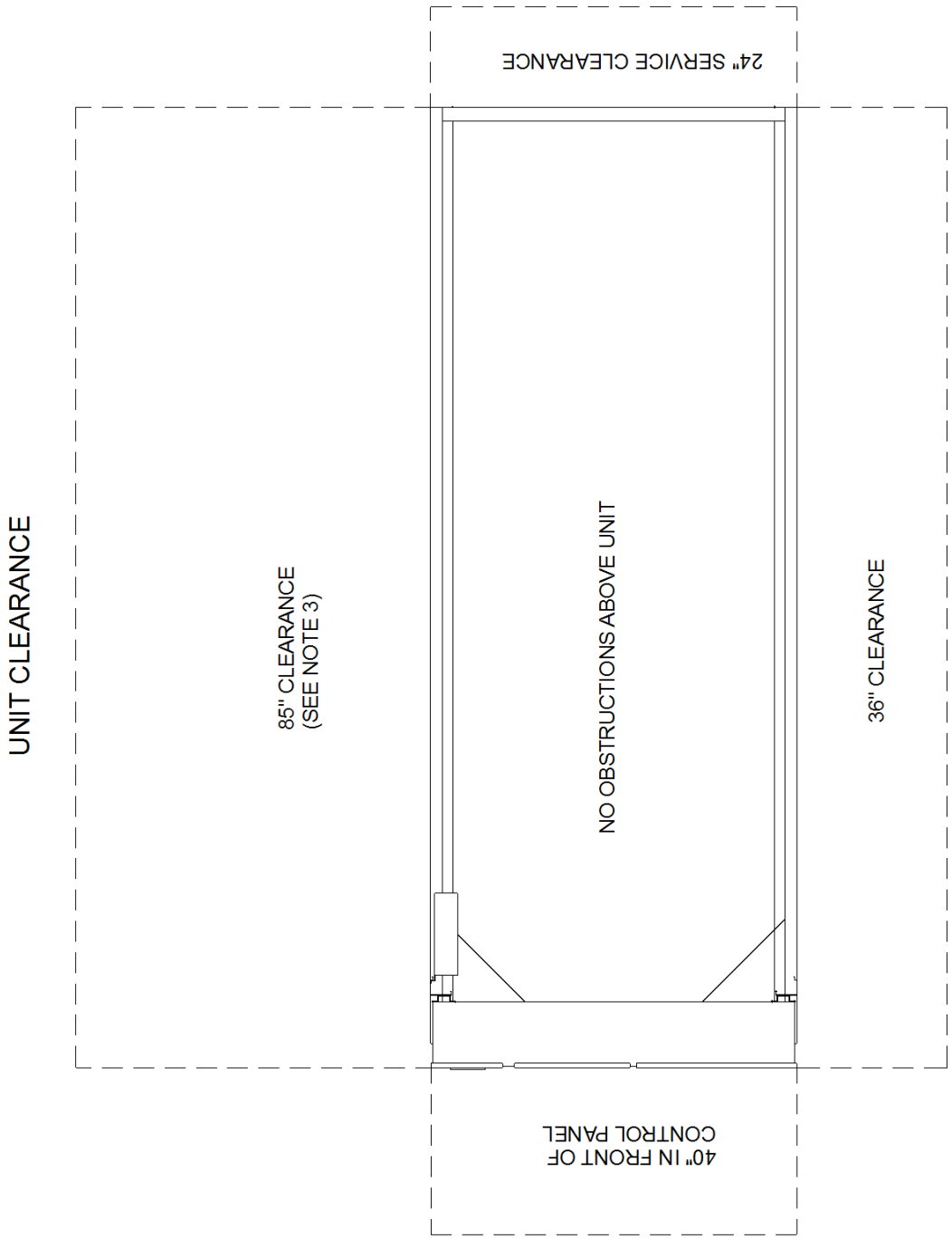

NOTES:
1. AREA ABOVE UNIT IS REQUIRED FOR OPERATION, MAINTENANCE, ACCESS PANEL AND AIR FLOW. NO OBSTRUCTIONS ABOVE UNIT.
2. FOR OBSTRUCTIONS OR MULTIPLE UNITS, REFER TO THE CLOSE SPACE BULLENTIN.
3. CLEARANCE OF 85" ON THE SIDE OF THE UNIT IS REQUIRED FOR COIL REPLACEMENT. PERFERRED SIDE IS SHOWN (LEFT SIDE OF UNIT AS FACING THE MAIN CONTROL PANEL OR CIRCUIT 1 CONTROL PANEL). HOWEVER, EITHER SIDE IS ACCEPTABLE.

⚠ WARNING

HAZARDOUS VOLTAGE!
DISCONNECT ALL ELECTRIC POWER INCLUDING REMOTE DISCONNECTS AND FOLLOW LOCK OUT AND TAG PROCEDURES BEFORE SERVICING. ENSURE THAT ALL MOTOR CAPACITORS HAVE DISCHARGED STORED VOLTAGE. UNITS WITH VARIABLE SPEED DRIVE, REFER TO DRIVE INSTRUCTIONS FOR CAPACITOR DISCHARGE.
FAILURE TO DO THE ABOVE COULD RESULT IN DEATH OR SERIOUS INJURY.

INCOMING CUSTOMER WIRE

CUSTOMER CONNECTION SINGLE POINT POWER TO TERMINAL BLOCK SCCR 10,000 A

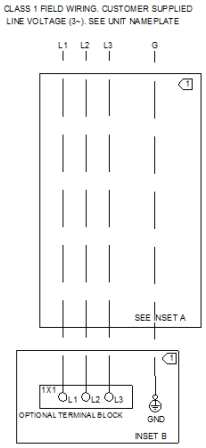

CAUTION:

- DO NOT ENERGIZE UNIT UNTIL INSTALLATION COMPLETION CHECK SHEET AND START UP PROCEDURES HAVE BEEN COMPLETED.
- THE EVAPORATOR HEATER POWER CIRCUIT CONNECTION, TERMINAL STRIP 1X8 SHEET 2, 115VAC/~1/15A, IS MANDATORY FOR NON-GLYCOL MEDIUMS. SEE INSTALLATION, OPERATION, AND MAINTENANCE (IOM) DOCUMENT FOR FREEZE AVOIDANCE DETAILS.

GENERAL NOTES:

- ALL FIELD WIRING MUST BE IN ACCORDANCE WITH THE NATIONAL ELECTRIC CODE (NEC), STATE, AND LOCAL CODES.
- CUSTOMER CONTROL WIRING TO BE RELIABLY ROUTED AND NOT INSTALLED IN CONDUIT WITH 115VAC OR 3~ CIRCUITS.
- ALL STANDARD AND OPTIONAL COMPONENTS SHOWN. DASHED LINE ENCLOSED INSETS INDICATE OPTIONAL FACTORY INSTALLED OR CUSTOMER PROVIDED AND INSTALLED COMPONENTS.
- UNLESS OTHERWISE NOTED ALL SWITCHES ARE SHOWN AT 25?C (77?F), AT ATMOSPHERIC PRESSURE, AT 50%% RELATIVE HUMIDITY, WITH ALL POWER REMOVED AND AFTER NORMAL SHUTDOWN HAD OCCURRED.

CUSTOMER POWER CONNECTIONS
CUSTOMER COMMUNICATION CONNECTIONS

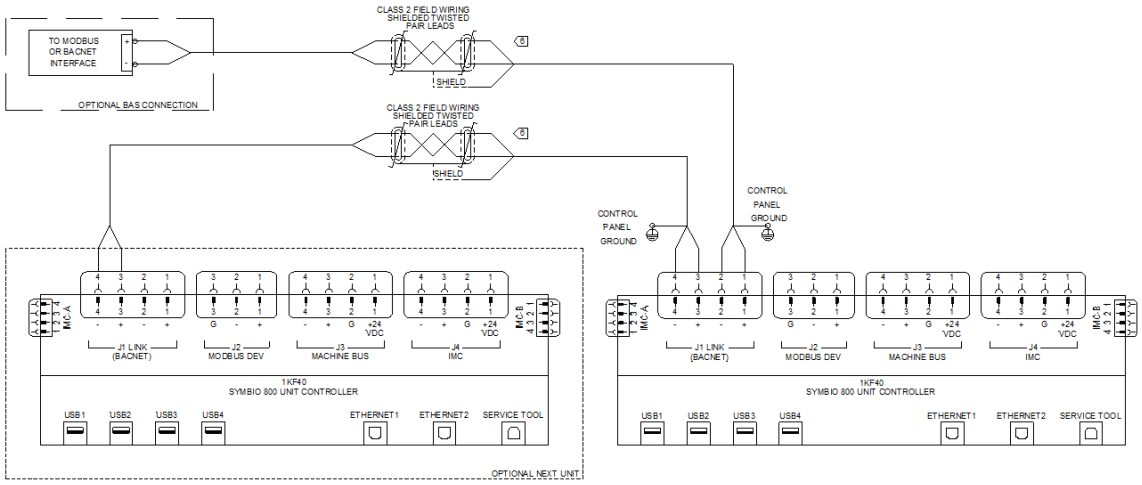

1. CLASS 1 FIELD WIRING INSULATION RATING IS REQUIRED TO BE EQUAL TO OR GREATER THAN THE EQUIPMENT SUPPLY VOLTAGE RATING AND 90?C TEMPERATURE INSULATION RATING. REFER TO UNIT NAMEPLATE FOR MINIMUM CIRCUIT AMPACITY AND MAXIMUM OVERCURRENT PROTECTION DEVICE. PROVIDE EQUIPMENT GROUND CONDUCTOR(S). REFER TO EQUIPMENT SUBMITTAL FOR ACCEPTABLE WIRE RANGE AT CONNECTION POINT(S).

6. SHIELDED, TWISTED PAIR LEADS ARE REQUIRED FOR CONNECTIONS TO THE COMMUNICATIONS INTERFACE MODULES. THE SHIELD SHOULD ONLY BE GROUNDED AT THE UNIT CONTROL PANEL END. REFER TO INTEGRATION, SYMBIO 800, AND BUILDING AUTOMATION SYSTEM (BAS) COMMUNICATION INSTALLATION LITERATURE FOR MORE DETAILS.

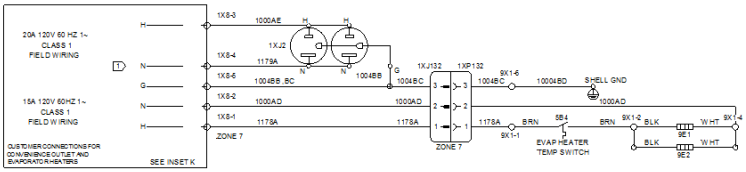

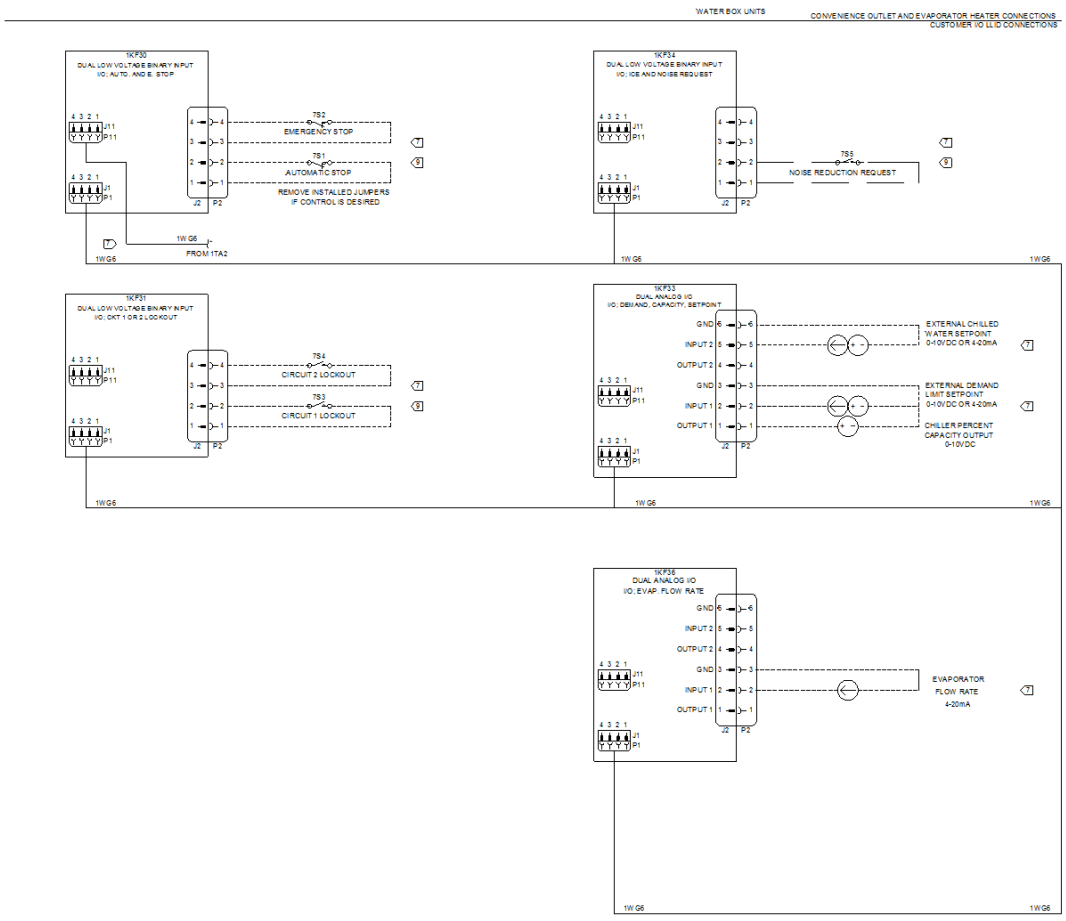

<7> CLASS 1 FIELD WIRING INSULATION RATING IS REQUIRED TO BE EQUAL TO OR GREATER THAN THE EQUIPMENT SUPPLY VOLTAGE RATING AND 90?C TEMPERATURE INSULATION RATING. REFER TO UNIT NAMEPLATE FOR MINIMUM CIRCUIT AMPACITY AND MAXIMUM OVERCURRENT PROTECTION DEVICE. PROVIDE EQUIPMENT GROUND CONDUCTOR(S) DEPENDING ON CONFIGURATION, EQUIPMENT MAY HAVE SINGLE OR DUAL POINT POWER CONNECTIONS. REFER TO EQUIPMENT SUBMITTAL FOR ACCEPTABLE WIRE RANGE AT CONNECTION POINT(S).

<4> GLOBAL BUS CONNECTIONS ARE NOT NECESSARILY IN THE ORDER DEPICTED.

<7> CLASS 2 FIELD WIRING INSULATION IS REQUIRED TO BE RATED AT 300V MINIMUM. UNLESS OTHERWISE NOTED, ALL CUSTOMERS CONTROLS WIRING CONNECTIONS ARE MADE TO CIRCUIT BOARD MOUNTED BOX LUGS WITH A WIRE RANGE OF 14 TO 18 AWG.

<8> RELAY CONTACT RATINGS AT 115VAC: 7.2A RESISTIVE, 2.88A PILOT DUTY, OR 1/3 HP, 7.2 FLA. CONTACTS ARE RATED FOR 240VAC, 5A GENERAL PURPOSE DUTY.

<9> CUSTOMER SUPPLIED CONTACTS FOR ALL LOW VOLTAGE CONNECTIONS MUST BE COMPATIBLE WITH DRY CIRCUIT 24VDC FOR A 12mA RESISTIVE LOAD. SILVER OR GOLD PLATED CONTACTS ARE RECOMMENDED.

Foundation
Provide rigid, non-warping mounting pads or a concrete foundation of sufficient strength and mass to support the applicable operating weight (i.e. including completed piping, and full operating charges of refrigerant, oil and water). The expectation of Trane equipment is that piping is fully supported by an independent structure/system, without being connected to the waterbox. Once in place, the unit must be level within 1/2" across the length and width of the unit. The Trane Company is not responsible for equipment problems resulting from an improperly designed or constructed foundation.

General
Units are leak and pressure tested at 385.00 psi high side, 220.00 psi low side, then evacuated and charged.

Standard power connections include main three phase power to the compressors, condenser fans and control power transformer.

Note: A separate field supplied low voltage power source is required to power the evaporator freeze protection.

Unit panels, structural elements and control boxes are constructed of galvanized steel and mounted on a bolted galvanized steel base. Unit panels, control boxes and the structural base may be finished with a baked on powder paint.

Anytime water only is present in the evaporator, the Trane Symbio(TM) 800 controller must have flow control of the chilled water system. Flow control can be done either directly or through an input to a building automation system to conduct an action resulting in minimum flow through the chiller evaporator barrel to avoid potentially catastrophic damage to the evaporator due to freezing. If the system has sufficient glycol to protect down to the lowest expected ambient, flow control is optional.

Factory Refrigeration Charge
Packaged units ship with a full operating charge of oil and HFO-513A refrigerant.

Evaporator Temperature
Unit is designed for operation in standard leaving evaporator temperature (equal to or greater than 40.0 F.

ASME/Canadian Pressure Vessel Code
Chiller complies with ASME Pressure Vessel Code Section VIII. ASME nameplates are attached to applicable pressure vessels including oil separators.

Condenser
Air-cooled condenser coils use all Long Life Alloy aluminum brazed fin construction. The condenser will have an integral subcooling circuit. The maximum allowable working pressure of the condenser is 350 psig (2412 kPa).

Condenser Fans
Condenser fans are direct-drive vertical discharge. The condenser fan motors are permanent magnet motors with integrated drive to provide variable speed fan control for all fans. They are designed with permanently lubricated ball bearings, internal temperature and current overload protection, and customer fault feedback as a standard product offering. The fan impeller is a bladed-shrouded fan made from heavy-duty molded plastic.

Condenser Standard Ambient
Standard units will start and operate between 32.0 F to 105.0 F ambient.

Sound - Invisi Sound Standard with Noise Reduction
Each variable speed rotary screw compressor will have a muffler as standard and each condenser fan will be low noise as standard.

Compressor and Lube Oil System
The rotary screw compressor is semi-hermetic, direct drive with capacity control via an adaptive frequency drive, rolling element bearings, differential refrigerant pressure oil pump and oil heater. The motor is a suction gas cooled, hermetically sealed, permanent magnet motor. An oil separator is provided separate from the compressor. Oil filtration is provided internal to the compressor. Check valves in the compressor discharge and lube oil system are also provided.

Refrigeration Circuit
Each unit has two refrigerant circuits, with one or two rotary screw compressor per circuit. Each refrigerant circuit includes a compressor suction and discharge service valve, liquid line shutoff valve, removable core filter, liquid line sight glass with moisture indicator, charging port and an electronic expansion valve. Fully modulating compressors and electronic expansion valves provide variable capacity modulation over the entire operating range.

Unit Controls
All unit controls are housed in an outdoor rated weather tight enclosure with removable plates to allow for customer connection of power wiring and remote interlocks. All controls, including sensors, are factory mounted and tested prior to shipment. Microcomputer controls provide all control functions including startup and shut down, leaving chilled water temperature control, evaporator flow proving, compressor staging and speed control, electronic expansion valve modulation, condenser fan sequencing and speed control, anti-recycle logic, automatic lead/lag compressor starting and load limiting.

The Symbio(TM) 800 unit control module, utilizing Adaptive Control microprocessor, automatically takes action to avoid unit shut-down due to abnormal operating conditions associated with low refrigerant pressure, high condensing pressure, VFD/Compressor current overload, low oil return, low discharge superheat, and high compressor discharge temperature. Should the abnormal operating condition continue until a protective limit is violated, the unit will be shut down. Unit protective functions of the Symbio(TM) 800, include loss of chilled water flow, evaporator freezing, low refrigerant pressure, high refrigerant pressure, high compressor motor temperature, and loss of oil to the compressor.

Unit Display
A full color TD-7 AdaptiView touch screen display indicates all important unit and circuit parameters, in logical groupings on various screens. The parameters including chilled water set point, leaving chilled water temperature, demand limit set point, evaporator and condenser refrigerant temperatures and pressures, compressor and fan speeds, and all pertinent electrical information. The display also provides on screen trending graphs of predefined parameters as well as customizable trend graphs based on user defined parameters from a list of all available parameters. The display also provides indication of the chiller and circuits top level operating modes with detailed sub-mode reports available with a single key press, as well as diagnostics annunciation and date and time stamped diagnostic history. The standard color display is fully outdoor rated, and, can be viewed in full daylight without opening any control panel doors.

The display is outdoor capable including an UV resistant touchscreen with removable metal cover

Chilled Water Reset
This provides the control logic and factory installed sensors to reset leaving chilled water temperature. The set point can be reset based on ambient temperature or return evaporator water temperature.

Factory Mounted Flow Proving - Water
The factory installed evaporator water flow switch is provided with the control logic to turn the chilled water flow on and off as the chiller requires for operation and protection.

Compressor Starter - Variable Frequency Drive
The compressors on the ACR chillers are driven by air-cooled Variable Frequency Drives (VFD). The drives include custom programming for Trane application to provide chiller specific protections and stable compressor operation across the operating map. Protections include compressor overload, low or high line voltage, output phase loss, input phase loss, drive overheating, and more. The drives communicate over a serial connection (Modbus) to the Tracer® Symbio(TM) 800 unit control module for run-time control, real-time data feedback, and diagnostics.

Power Line Connection - Terminal Block
Power line connection type is standard with a terminal block.

Short Circuit Rating - Default
A short circuit current rating offers a measure of safety for what the starter panel enclosure is able to withstand in the event of a phase to phase, phase to ground, or similar fault caused by a short circuit.

Short circuit current rating of 35 kA is provided.

Remote Communications - BACnet Interface (MS/TP)
BACnet Interface allows the user to easily interface with using BACnet MS/TP via a single twisted-pair wiring to a factory-installed and tested communication board. Provides support for BACnet defined MS/TP protocol as defined by ASHRAE standard 135-2004.

Architectural Louvered Panels
Louvered panels cover the complete condensing coil and service area beneath the condenser.

Convenience Outlet
Provides a 20A, 115Vac (60 Hz) convenience outlet on the unit.

Note: An additional field supplied power connection must be provided to power the convenience outlet..

Equipment Sales & Eng Corp

PO Box 29024
65th Infantry Station
RIO PIEDRAS, 00929-0024
(787) 761-5440 /
email: esecorp@yahoo.com

SUBMITTAL

Proposal to:
FOMENTO HEADQUARTERS
.
HATO REY,

Project:
PRIDCO / FOMENTO
HATO REY, PR

Engineer:
FOMENTO HEADQUARTERS
HATO REY , PR

Opportunity / Quote No. (Ver): ROSILMA VELEZ_241107_172910708 / ROSILMA VELEZ_250217_063505884 (1)
Rep Quote No.:

February 18, 2025

TOWER MODEL	PERFORMANCE CONDITIONS	MOTOR DATA	TOWER DIMENSIONS	WEIGHTS
Quantity of (2) Marley NC Class Diamond Series model **NC8401MAN** factory assembled 2-Cell crossflow cooling tower(s)	Per 2-cell tower: 750 gpm 94.3 °F Hot Water 85.0 °F Cold Water 80.0 °F Entering WB	NEMA 7.5 HP 1 speed / 1 wind 3 phase / 60 Hz / **230/460v** 1.2sf / TEFC 1800 RPM Premium Efficiency Inverter duty nameplated *Site Voltage; 480*	Each cell: (without options) Length 6' - 6 1/4" Width 12' - 10" Height 10' - 2 1/4" Per 2-cell tower: (with options) Length 16' - 6 5/8" Width 12' - 10" Height 13' - 4 5/8"	Per cell: Shipping: 5,367 lb Operating: 9,190 lb Per 2-cell tower: Shipping: 10,733 lb Operating: 18,379 lb

Quantities shown below are per tower.

Base Tower Construction/Equipment:

Stainless Steel casing.
Stainless Steel structure.
Stainless Steel (per SS Grade) collection basin.
Stainless Steel (per SS Grade) distribution basin.
All stainless steel is series 304.
Low Sound fan with aluminum blades.
Marley designed Geareducer® with 5-year warranty.
15 mil PVC film fill with integral louvers and drift eliminators designed and manufactured by Marley.
Published sound data is independently verified by a CTI licensed test agency.
CTI certification per STD-201.
Stainless steel fan guard.
100 PSF WIND LOAD
Seismic Design Category D2

Collection Basin Connections and Accessories:

All flanges are to Class 125 ANSI B16.1 standard.
All threads are to American Standard Pipe Taper Thread.
(2) 8 in (203 mm) diameter bottom outlet(s) with trash screen(s) and anti-vortex plate(s).
6 in (152 mm) diameter hole and bolt circle(s) for equalization, One per Cell
4 in (102 mm) diameter combination drain and overflow in each cell
4 in (102 mm) additional drain with plug in each cell
(2) 1 in (25.4 mm) water make-up float valve(s)
Factory installed basin sweeper piping, 20 psi (1.38 bar), Standard

Distribution Basin Inlet and Accessories:

(1) self-balancing 6 in (152 mm) diameter PVC side inlet connection per cell.
All internal piping is PVC. External piping is PVC.

Equipment Sales & Eng Corp

PO Box 29024
65th Infantry Station
RIO PIEDRAS, 00929-0024
(787) 761-5440 /
email: esecorp@yahoo.com

Maintenance & Maintenance Access Features:

Tower is designed in accordance with OSHA safety standards.
This quotation does not include features which are available to allow safe access on the fan deck while the fan is still operating. If this is a desired feature for your intended operation, please contact your sales representative.
External lube line with dipstick
S300 full face air inlet screens
Convenient access to the collection basin and plenum area is provided via a large access door located on each endwall
Stainless Steel (per SS Grade) plenum walkway in each cell
Easy fitting perimeter guardrail, kneerail & toeboard
(1) Cased face ladder
Easy fitting ladder safety cage(s)
Self closing safety gate(s) included at the top of the access ladders

Control Systems:

(1) IMI 686B Smart Electronic sw w/ 30' cord + IB1 interface box vibration cutoff switch per cell

METAL GAUGE
MARLEY COOLING TOWER MODEL NC8401MAN

Hot Water Basin Walls	Hot Water Basin Covers	Cold Water Basin Walls	Hot Water Basin Bottom	Cold Water Basin Bottom	Fan Deck	Fan Cylinder	Steel Casing Panels	Purlins Transverse Framing	Purlins Longitudinal Plenum
11	16	11	11	11	16	16	16	11	11

MARLEY®

Open Cooling Tower Datasheet

Job Information

PRIDCO

SAN JUAN, PR

Selected by

Equipment Sales & Engineering Corp.
PO BOX 29024
San Juan, 00929

ROSILMA VELEZ
7873842646
esecorp@yahoo.com

Marley NC8401MAN2

Marley NC Steel Crossflow Induced Draft Double-Flow Open Cooling Tower
Standard Low Sound (A)

https://spxcooling.com/cooling-towers/marley-nc/

Selection

Model	NC8401MAN2
Number of Cells	2
Capacity	109.9%
ASHRAE 90.1 Eff. (gpm/Hp)	78.3
Fill Type	MX75

This selection satisfies your design conditions.

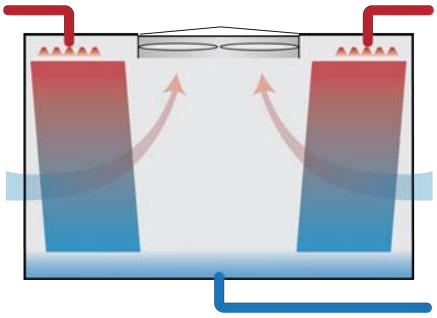

Design Conditions

Fluid	Water
Total Flow (gpm)	750
HWT (°F)	94.25
CWT (°F)	85
WBT (°F)	80
Total Heat Load (Btu/h)	3447400

Mechanical

	Per Cell	Total
Fan Type	Low Sound	
Fans	1	2
Fan Speed (rpm)	434	
Fan Motor Speed (rpm)	1800	
Fan Motor Nameplate (Hp)	7.5	15
Fan Motor Rated (BHp)	7.5	15
Fan Motor Required (BHp)*	5.551	11.1
Airflow (cfm)	54439	108880

** Fan Motor Required power assumes variable speed operation.*

Weights / Dimensions (options NOT included, refer to drawings)

	Per Cell	Total
Width	12'-10"	12'-10"
Length	6'-6 ¼"	13'-4"
Height	10'-2 ¼"	10'-2 ¼"
Shipping Weight (lb)	3784	7568
Heaviest Section (lb)	3784	3784
Max Operating Weight (lb)	7611	15220
Clearance Solid Wall *	4'-1 ⅝"	
Clearance 50% Open Wall *	3'	

** Air inlet clearances with no performance impact; reduced if tower elevated*

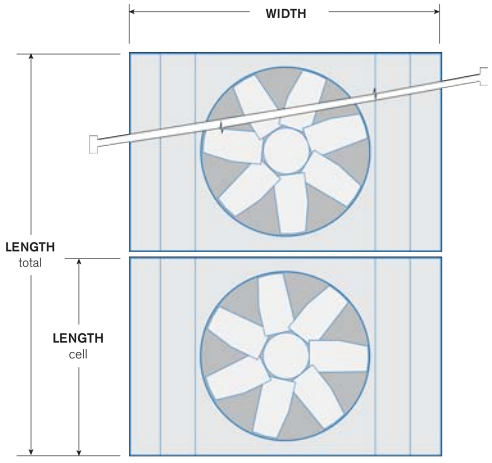

Plan View

Other Data

Static Lift (ft)	10.4
Distribution Head Loss (ft)	NA
Evaporation, 50% RH (gpm)	8.65

Heater Sizing (to prevent collection basin freezing during shutdown)

kW/Cell	9	7.5	6	4.5	3
Ambient (°F)	-26.6	-14.9	-3.2	8.52	20.2

© 2024 SPX Cooling Tech, LLC. All rights reserved.

CERTIFICATE OF INDEPENDENT SOUND VALIDATION

SPX® ★★★ MARLEY®

SPX Cooling Technologies, Inc. | 7401 West 129 Street | Overland Park, KS 66213 | 913 664 7400 | spxcooling.com

MARLEY NC® COOLING TOWER

This document certifies that published sound data for the Marley NC Cooling Tower line has been independently verified, and complies with CTI ATC-128, Test Code for Measurement of Sound for Water-Cooling Towers.

Sound testing was conducted on various Marley NC models and configurations by an independent CTI–licensed sound test agency using calibrated Type 1 precision sound test instruments per the test standards. Sound pressure levels were recorded in the acoustic near-field and far-field locations as specified in the CTI ATC-128 test procedure for Sound Measurements for Small Towers. Testing and analysis was conducted by an INCE board certified member, and licensed Professional Engineer in Acoustical Engineering, from Tenor Engineering Group.

Tenor Engineering Group is an industry leader in acoustical engineering. CTTA is a licensed sound test agency.

LICENSED CTI SOUND TESTING BY:

COOLING TECHNOLOGY INSTITUTE CTI EST. 1950 ©
Member

Erik Miller-Klein, P.E.
Tenor Engineering Group

tenor
www.tenor-eng.com

Nicholas Stich
Cooling Tower Test Associates

CTTA

CoolSpec™ Version 8.2.1
Product Data: 11/7/2024(Current)

© 2024 SPX Cooling Tech, LLC.
11/7/2024 6:32:45 PM

Job Information

PRIDCO

SAN JUAN, PR

Selected by

Equipment Sales & Engineering Corp.
PO BOX 29024 PO BOX 29024
San Juan,Puerto Rico00929

ROSILMA VELEZ
Tel 7873842646
esecorp@yahoo.com

Selection

Manufacturer	Marley	Fan Speed (90.1%)	391 rpm
Product	NC Steel	Fan Tip Speed (90.1%)	7373 fpm
Model	NC8401MAN2	Fan Motor Speed (90.1%)	1622 rpm
Cells	1	Fan Motor Capacity per cell	7.5 Hp
Fan	6 ft, 5 Blades , Low Sound	Fan Motor Output per cell	5.551 BHp
Fans per cell	1	Fan Motor Output total	5.551 BHp
Model Group	Standard Low Sound (A)		

Sound » Independently Verified

1 - Cell sound data for an unobstructed environment.

Sound Pressure Level (SPL) expressed in dB (re: 20x10-6 Pa)
Sound Power Level (PWL) expressed in dB (re: 1x10-12 watts)

Distance	Location	Octave Band Center Frequency (Hz) 63	125	250	500	1000	2000	4000	8000	Overall dBA
5 ft	Air Inlet Face SPL	70	74	70	68	65	62	58	50	70
5 ft	Cased Face SPL	66	66	64	58	53	52	48	40	61
5 ft	Fan Discharge SPL	69	71	70	70	66	64	62	52	72
50 ft	Air Inlet Face SPL	58	58	52	53	49	46	41	36	54
50 ft	Cased Face SPL	62	56	53	51	47	42	37	27	53
50 ft	Fan Discharge SPL	62	64	61	58	56	52	49	40	61

Notes

- Sound levels have been independently verified by a CTI-licensed sound test agency to ensure validity and reliability of the published values.
- Measurement and analysis of the sound levels were conducted by a certified Professional Engineer in Acoustical Engineering.
- Sound pressure levels were measured and recorded on various models in the acoustic near-field and far-field locations using ANSI S1.4 Type 1 precision instrumentation.
- Data developed in accordance with Cooling Technology Institute ATC-128 for Small Heat Rejection Equipment per 2024 revision.

Other Resources

For additional information on sound-related topics please see:

Sound Power Impacts Per CTI Code Revision
https://spxcooling.com/library/sound-power-impacts-per-cti-code-revision/
Understanding and Evaluating Cooling Tower Sound Levels Among Manufacturers
https://spxcooling.com/library/understanding-and-evaluating-cooling-tower-sound-levels-among-manufacturers/

		No.:
		Date: 16-DEC-2015

DATA SHEET
Three-phase induction motor - Squirrel cage rotor

Customer	:	
Product line	:	W22 Cooling Tower Motors: NEMA Premium - TEFC

Frame	:	213T
Output	:	7.5 HP
Frequency	:	60 Hz
Poles	:	4
Full load speed	:	1765
Slip	:	1.94 %
Voltage	:	208-230/460 V
Rated current	:	19.9-18.4/9.18 A
Locked rotor current	:	130/65.2 A
Locked rotor current (Il/In)	:	7.1
No-load current	:	8.10/4.05 A
Full load torque	:	22.0 lb.ft
Locked rotor torque	:	220 %
Breakdown torque	:	310 %
Design	:	B
Insulation class	:	F
Temperature rise	:	80 K
Locked rotor time	:	20 s (hot)
Service factor	:	1.25
Duty cycle	:	S1
Ambient temperature	:	-20°C - +40°C
Altitude	:	1000
Degree of Protection	:	IP55
Approximate weight	:	154 lb
Moment of inertia	:	1.3436 sq.ft.lb
Noise level	:	58 dB(A)

	D.E.	N.D.E.
Bearings	6308 2RS	6207 2RS
Regreasing interval	---	---
Grease amount	---	---

Load	Power factor	Efficiency (%)
100%	0.82	91.7
75%	0.76	91.0
50%	0.66	89.5

Notes:

Typical Motor Data Sheet

Performed by	Checked

COOLING TOWER CELL

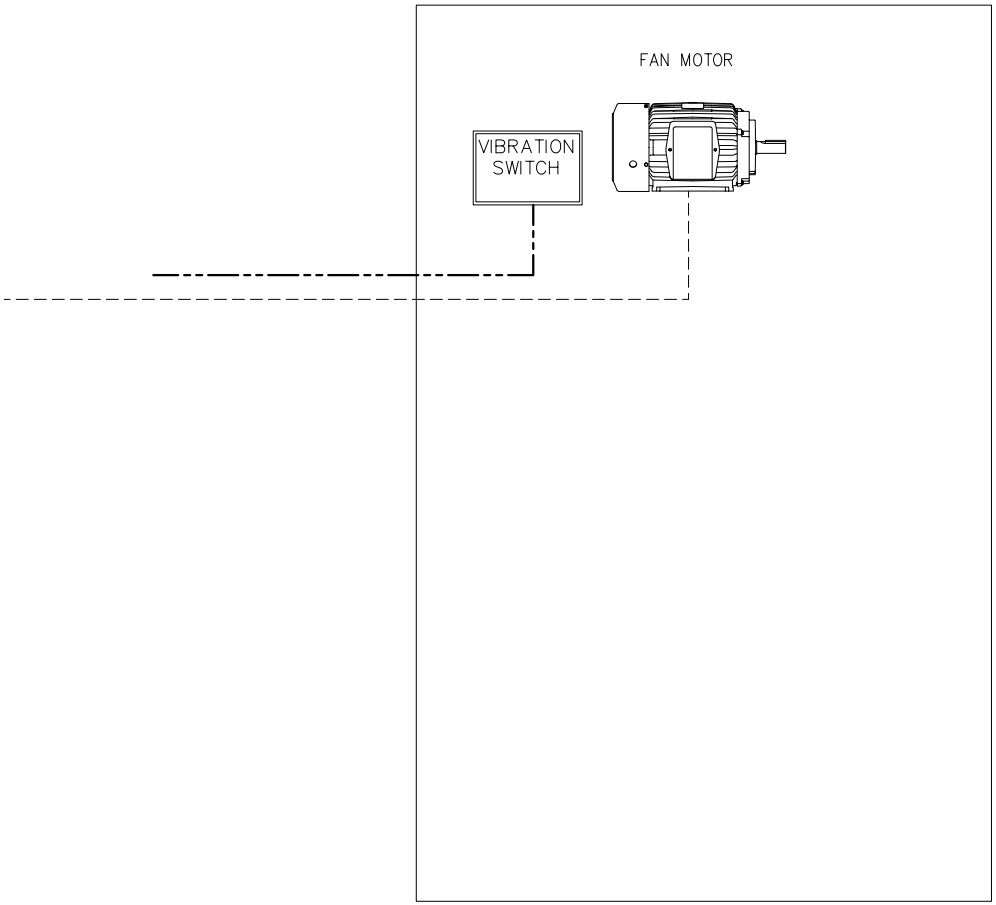

----- = POWER WIRING BY OTHERS

—·— = CONTROL WIRING—BY OTHERS

© as of date(s) in title block SPX Cooling Technologies
Unpublished—All rights reserved under copyright laws.

DRAWN BY	DRAWN DATE						
PENNISTON_ST	05/08/2018	TYPICAL ONE LINE DIAGRAM MOTOR ONLY—VIBSW				MARLEY	
CHECKED BY	CHECKED DATE						
JENKINS_STD	05/10/2018						
RELEASED BY	RELEASED DATE	ECM NUMBER	ORDER NUMBER	FORMAT	PLOT	DRAWING NUMBER	REV.
JENKINS_STD	05/10/2018	23774	—/—	ANSI B	1=1	Z1052317	A

MARLEY®

user manual

IMI 686B vibration switch

INSTALLATION - OPERATION - MAINTENANCE

Z1070990_B ISSUED 1/2020

READ AND UNDERSTAND THIS MANUAL PRIOR TO OPERATING OR SERVICING THIS PRODUCT.



overview

The IMI 686B vibration switch is designed and applied specifically for cooling tower applications. The casing is stainless steel, hermetically sealed and the cable set is molded to the casing to prevent water vapor and contaminants from entering the switch or its connection points.

The switch is factory programmed by SPX specifically for cooling tower vibration protection and should not be reprogrammed unless directed by SPX.

Refer to wiring diagrams in this manual for interfacing with VFD and motor starter equipment. Typically the switch is wired to the shutdown circuit of a VFD or motor starter. The internal switch contact is rated at 20mA, do not exceed this value. Most VFDs have a 24 VDC low current safety circuit which is well under the 20mA value.

The IMI 686B vibration switch has a single contact. If two contacts are required use a Marley IB1 interface box or one of the output fault contacts on the VFD to indicate a VFD shutdown.

⚠ Caution

Applying this switch directly in line with a motor starter operating coil may damage the switch due to high inrush current when energizing the coil. When applying the switch to a motor starter consider using the Marley IB1 interface box.

General Features

- Tested in cooling tower applications by SPX engineers who rated its performance superior to mechanical vibration switches.
- Factory-programmed by SPX specifically for cooling tower vibration protection.
- Switch may be reset remotely without entering the cooling tower.
- Repeatable trip-point includes built-in delay for startup and momentary vibration spikes.
- Monitors vibration velocity for consistent results.
- Able to sense low frequency vibrations better than a mechanical switch.
- Integral 30' (9m) cable with molded connection at the switch protects the connection point wiring from humidity and chemical exposure.
- NEMA4X/IP68 hermetically-sealed stainless steel enclosure withstands harsh internal environments in a cooling tower.
- Factory installed at location near primary source of vibration.
- 2-wire combination power and control circuit adaptable to most VFD circuits.
- Wide operation temperature range: -40 to 185°F.

installation

Sequence of Operation

In normal operation the switch is in a N.C. (normally closed) position with or without power applied. Once powered, the switch will remain in a closed state allowing mechanical equipment to operate. If the switch is subjected to a continuous high vibration level for 3 seconds or more the switch will open and remain open in a latched state until reset back to a closed position. The three second delay allows the tower fan to accelerate through critical frequencies avoiding nuisance tripping.

When the switch trips, the cooling tower has been subjected to a higher than normal vibration and should be inspected before being put back into service. Lockout the VFD or motor starter equipment and inspect the tower's mechanical equipment for possible vibration issues . An unbalanced driveshaft or coupling may cause enough vibration to trip the switch.

After the vibration issue is resolved and corrected, reset the vibration switch. To reset, power must be discharged then reapplied to the switch. When the switch is used in a VFD or motor starter safety circuit resetting may be accomplished by cycling power at the VFD or motor starter line side disconnect. Refer to the starter equipment wiring diagram or manual before attempting this operation. When cycling power off at a VFD, keep power off for 30 seconds allowing the VFD capacitors to totally discharge.

⚠ Warning

Cooling tower controls are typically two wire circuits so once the switch is reset the fan motor may start automatically without warning. Make sure personnel are in a safe location.

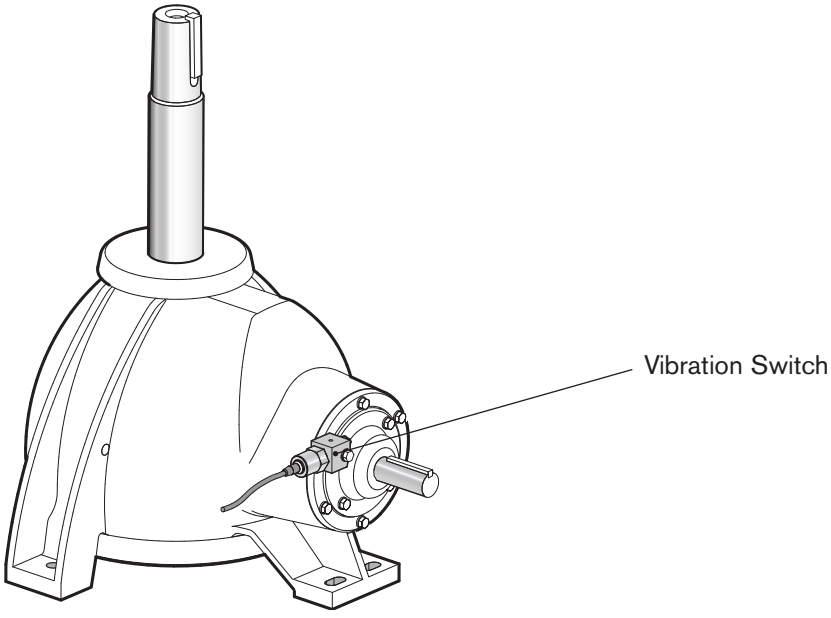

⚠ Caution

***Torque vibration switch 2-5 ft·lb$_f$ (3-7 N·m) when installing or reinstalling*.**

wiring

Two-Wire Control Circuit using an SPST Switch

Typical connection points for the IMI 686B vibration switch used with the E-Clipse bypass terminal strip of an ABB ACH550 VFD.

Breaking the control circuit between points 1 and 7 will disable VFD and bypass operation. To reset the vibration switch remove incoming power to the VFD, wait a minute or two allowing the VFD capacitors to discharge then reapply power. At this point the switch will be in a closed state allowing VFD operation.

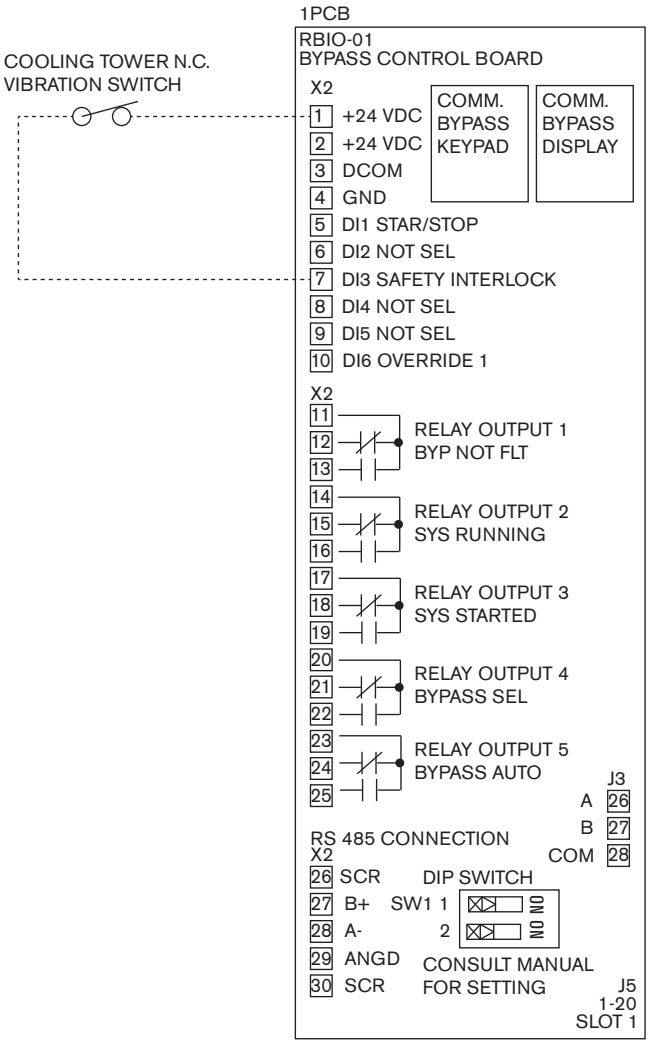

wiring

IB1 Interface Box Wiring Diagram

• Contacts shown in normal state and powered.

• Depress and hold the reset button for 15 seconds to reset the vibration switch.

A Marley IB1 interface box is available to help with connecting the vibration switch to other equipment such as a motor starter or other VFDs. The interface box provides a second contact which may be used to complete an alarm circuit at the BMS, reset push button and tripped indicating light.

Mount the IB1 interface box in a convenient location for easy access by operating personnel. Common locations are the cooling tower handrail or near the tower access door at grade level.

⚠ Caution

Do not wire the vibration switch in series with the coil of an electromechanical motor starter. Doing so may cause the internal switch to fail due to coil inrush current.



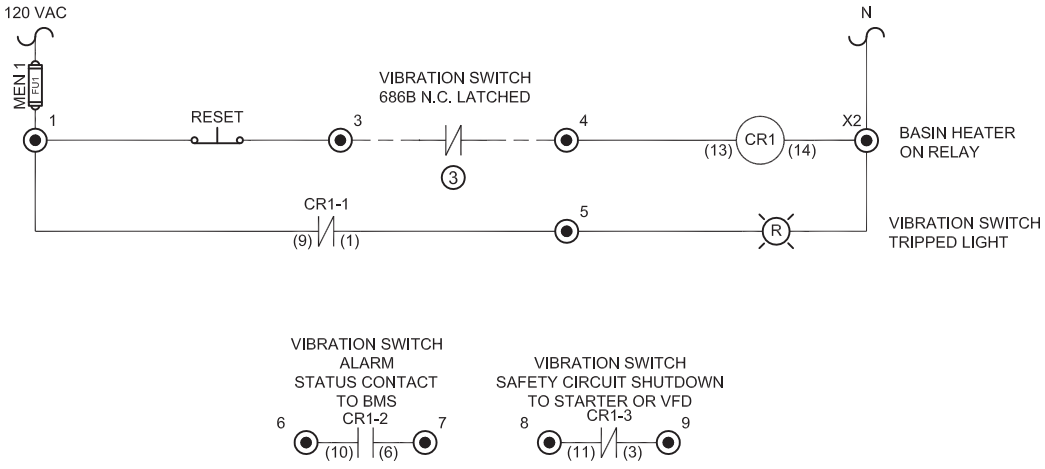

frequently asked questions

Voltage Ratings

Q What are the available voltage ratings?

A 24 to 240 VDC/AC - 50/60Hz.

Sensor

Q Is the switch solid state?

A Yes – a piezoelectric accelerometer senses the vibration level to activate a solid state relay when tripped. There are no mechanically moving parts.

Q Is the switch factory programmed?

A Yes – the switch is programmed for the specific use within a cooling tower.

Q Does the switch have two contacts?

A No – the switch has one contact that is factory programmed for N.C. operation and latches open upon a trip.

Q If two contacts are required can SPX accommodate this requirement?

A Yes – an interface box with two sets of mechanical dry relay contacts is available.

Q Is a 4-20mA vibration level output signal available?

A No – this device is only a switch.

Q Can the switch be reset remotely?

A Yes – removing the power to the switch will reset it back to normal operation.

Q Does the switch require maintenance?

A No.

Switch Mounting

Q What is the standard mounting stud?

A 1/4-28 UNF threads.

Q What is a typical mounting location?

A On a gearbox.

Q Is an explosion-proof design available?

A Yes – as a special. The explosion-proof model meets Class 1 Division 2 Groups A, B, C, and D.

Wiring

Q Is the switch furnished with a cable?

A Yes – the switch includes an integral 30' (9m) cable with blunt connection ends.

Q Can the probe leads be extended?

A Yes – using #18 gauge 2-wire stranded copper conductor plus a shield. SPX recommends using a junction box with terminal points to make connections for the extension wiring.

frequently asked questions

Q Can the leads be cut to length?

A Yes – excessive cable should be coiled and secured if wires are not cut to length.

Q Is the vibration switch replaceable without having to replace the cable?

A No – the cable is attached with an integrated molded connection. This connection helps prevent water entry into the switch.

Q Does the probe lead need to be in conduit?

A The sensor cable is rated for outdoor use. Follow local codes to determine if cable should be placed in conduit.

Integration

Q Can the switch be interfaced with the VFD in the Marley AIO control panel?

A Yes – the Marley AIO panel provides circuits to shut down the VFD and a status contact used for a remote BMS.

Q Can the switch be interfaced with other equipment such as an electromechanical motor starter?

A Yes – SPX can provide an interface box.

Specifications

Part Number	Description	Enclosure Rating	Cable	SPX Factory Programmed	Standards
2598732	Standard Vibration Switch	NEMA4X/IP68 Stainless Steel	30' (9m) with water-tight molded connection at switch and flying ends at opposite end	0.7 ips peak with 3 second delay	CE
2695604	Vibration Switch with Explosion-Proof Enclosure	CSA Class1, Div 2 Groups A, B, C, D	Conduit head with terminal blocks No Cable	0.7 ips peak with 3 second delay	CSA
2600177	IB1 Interface Box	NEMA 4X/IP56 Fiberglass	No Cable	N/A	CSA UL



Standard Vibration Switch



Vibration Switch with Explosion Proof Enclosure

SPX COOLING TECHNOLOGIES, INC.
7401 WEST 129 STREET
OVERLAND PARK, KS 66213 USA
913 664 7400 | spxcooling@spx.com
spxcooling.com

Z1070990_B | ISSUED 1/2020
©2018-2020 SPX COOLING TECHNOLOGIES, INC. ALL RIGHTS RESERVED
In the interest of technological progress, all products are subject to design and/or material change without notice.

SPX

MARLEY®

design information

Florida Building Code





Benefits of Following the Florida Building Code



- Florida state law compliance
- Reduce liability
- Timely construction schedule and permitting process
- Avoid penalties for non-compliance
- Avoid extensive downtime



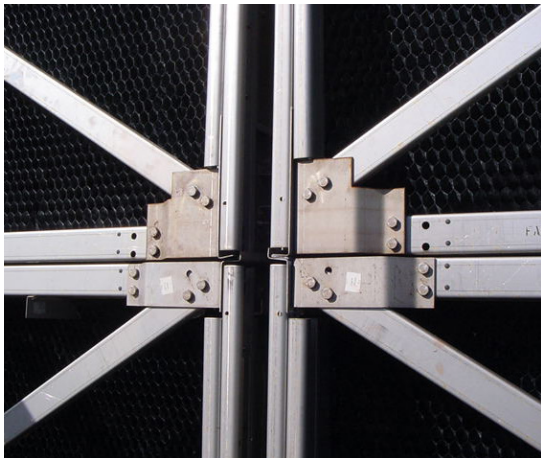

Ensure Your Building is Up to Code

What is required by the Florida Building Code? *

* (FBC Mechanical 908.1 / 908.4)

- Design the cooling tower as a structure per the mechanical code
- Structural code determines psf the tower must meet

Building Design Engineer (engineer of record)

* (FBC Building 1603.1.4)

- Provide site specific wind load (psf) including:
  - Wind speed (three second gust)
  - Wind importance factor
  - Wind exposure
  - Elevation to base of cooling tower

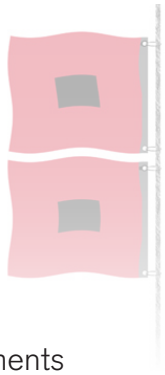

Cooling Tower Manufacturer

- Conforms to anchorage and structural requirements
- Support reactions; a function of psf
- Anchorage attachment details
- Florida P.E. sealed certification of cooling tower wind load capability

Everyone involved – the engineer, contractor, code officials, owner and manufacturer – has a responsibility to comply with the Florida Building Code. Marley cooling towers are modified specifically to comply with the Florida Building Code. Make sure your cooling towers are designed to meet this very demanding code. It's not a choice, it's the law.







With seven Marley representatives located throughout the state of Florida, we have you covered. Locate your local Marley rep at spxcooling.com

SPX COOLING TECHNOLOGIES, INC.
7401 WEST 129 STREET
OVERLAND PARK, KS 66213 USA
913 664 7400 | spxcooling@spx.com
spxcooling.com

SB-18 | ISSUED 03/2017
COPYRIGHT © 2017 SPX CORPORATION
In the interest of technological progress, all products are subject to design and/or material change without notice.

SPX®

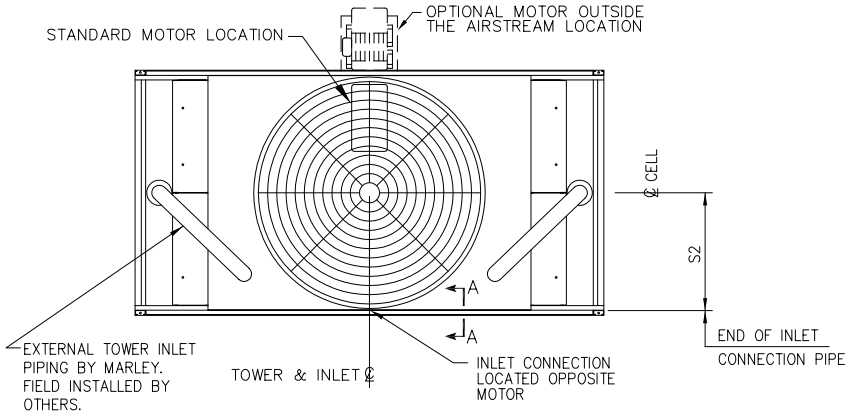

PLAN VIEW

TOWER MODEL	DIMENSIONS	
	S2	S7
8401	3'–3 1/16" [992]	7'–6 7/16" [2297]
8402	4'–1 3/4" [1264]	7'–6 5/8" [2302]
8403	4'–2 1/8" [1273]	9'–3 9/16" [2834]
8405	4'–11 1/4" [1505]	9'–2 9/16" [2808]
8407	5'–11 3/8" [1813]	9'–1 11/16" [2786]
8409	6'–9 5/16" [2065]	9'–2 1/8" [2797]
8410	5'–11 1/4" [1810]	13'–3 1/2" [4051]
8411	5'–11 1/4" [1810]	16'–1 9/16" [4916]
8412	6'–11 3/8" [2118]	16'–1 9/16" [4916]
8413	5'–11 1/4" [1810]	19'–10 5/8" [6061]
8414	6'–11 3/8" [2118]	19'–10 5/8" [6061]

NCWD	S2	S7
8413	5'–11 1/4" [1810]	19'–11 1/2" [6083]

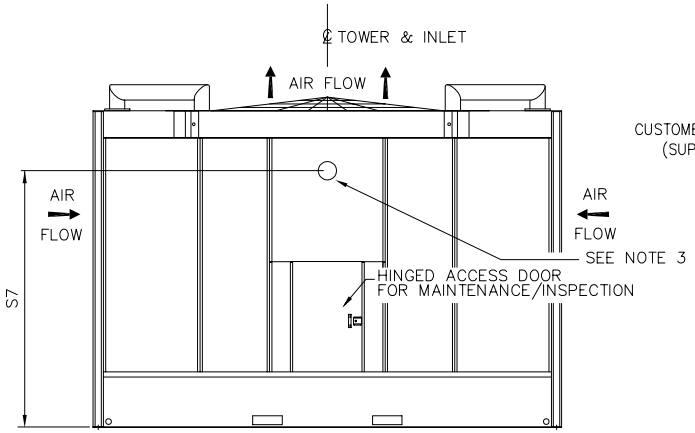

SIDE ELEVATION

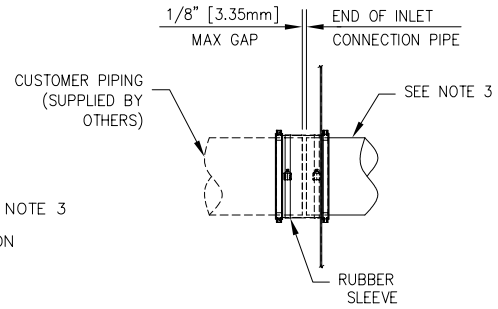

SECTION A–A
(INLET CONNECTION)

NOTES

1. ALL INTERNAL INLET PIPING TO THE FACE OF THE INLET CONNECTION, INCLUDING RUBBER SLEEVE IS SUPPLIED WITH THE COOLING TOWER. EXTERNAL PIPING AND SUPPORTS BEYOND THE INLET CONNECTION IS BY OTHERS. EXTERNAL PIPING MAY NOT BE SUPPORTED FROM THE TOWER.
2. ASSEMBLY TOLERANCE IS ±1/8" [3]. CONSULT SUPPLIERS OF SUPPORTING STRUCTURE FOR CONSTRUCTION TOLERANCE. ALL OF THE DIMENSIONS SHOWN ARE IN I–P (INCH–POUND) UNITS UNLESS OTHERWISE NOTED.
3. INLET CONNECTION USES A FIELD INSTALLED (SUPPLIED WITH TOWER) RUBBER SLEEVE WITH DOUBLE CLAMPS AT EACH PIPE.
4. USE THIS DRAWING IN CONJUNCTION WITH THE SCHEMATIC DETAIL DRAWINGS.
5. MULTI–CELL TOWERS SHOULD INCLUDE PROVISIONS TO BALANCE FLOW BETWEEN CELLS.
6. CONTACT YOUR SALES ENGINEER FOR THE REQUIRED PUMP HEAD FOR THIS ARRANGEMENT.
7. ALL DIMENSIONS SHOWN INSIDE OF BRACKETS[ ] ARE IN MILLIMETERS UNLESS OTHERWISE NOTED.

I–P [SI] UNITS

DRAWN BY	DRAWN DATE						
MADHU_STD	02/28/2020	SIDE SINGLE INLET CONNECTION DETAILS NC8401–14					SPX COOLING TECHNOLOGIES
CHECKED BY	CHECKED DATE						
ABDULFATTAH	02/28/2020						
RELEASED BY	RELEASED DATE	ECM NUMBER	ORDER NUMBER	FORMAT	PLOT	DRAWING NUMBER	REV.
ABDULFATTAH	02/28/2020	25607	–/–	ANSI B	1=1	Z0628332	C

© as of date(s) in title block SPX Cooling Technologies
Unpublished–All rights reserved under copyright laws.

Shipping Weight		Design Operating Loads			Wind Load		Seismic Load	
per Tower	per Cell	per Tower	per Cell	at A	Vert. Reaction at A	Horiz. Reaction at A	Vert. Reaction at A	Horiz. Reaction at A
10733 lb (4868 kg)	5366 lb (2434 kg)	18379 lb (8337 kg)	9190 lb (4168 kg)	2566 lb (1164 kg)	48.53 x P lb (4.51 x P kgf)	31.45 x P lb (2.92 x P kgf)	3023 x G lb (1371 x G kgf)	2121 x G lb (962 x G kgf)

(4) 3/4" ASTM A325 or M20 Grade 8.8 anchor bolts are required per cell. These anchor bolts are capable of resisting 237 psf (11348 N/m²) wind load or 3.3 G seismic load applied to the tower. This tower structure is capable of resisting 140 psf (6703 N/m²) wind load or 2.63 G seismic load. Wind and Seismic capacities are un-factored loads as determined by ASCE7-10/16/22. Determination of the site specific design wind and seismic loads are by others.

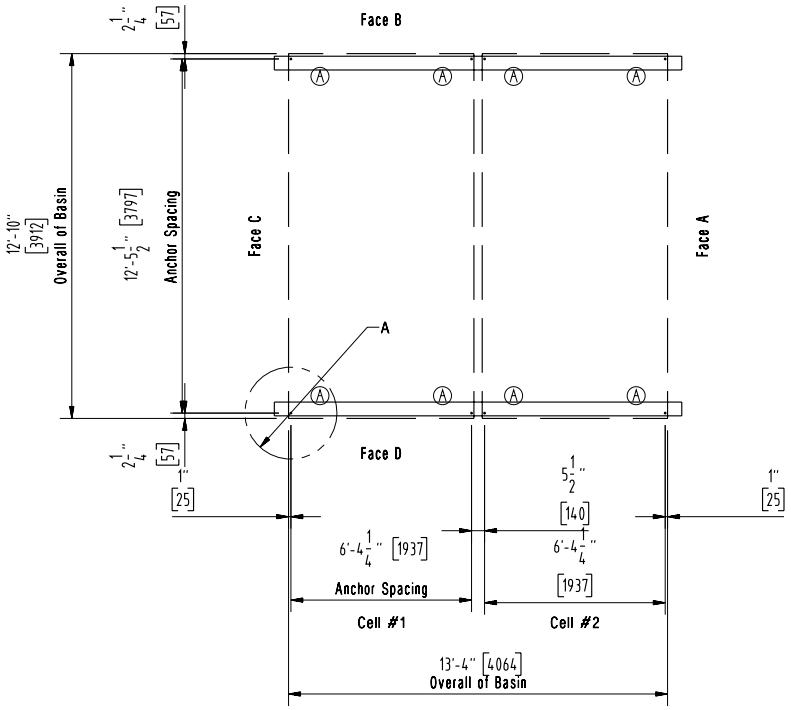

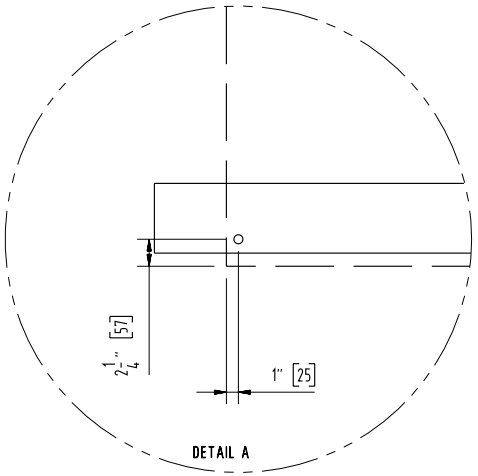

NOTES

1. SUPPORTING STEEL: The supporting steel is to be designed, constructed and furnished by the customer. It shall include customer supplied anchor bolts to suit the general dimensions of this drawing and of the Outlet Piping Plan drawing. The top surface of the supporting steel must be framed flush and level. The maximum beam deflection shall be limited to 1/360 of span, not to exceed 1/2" (13 mm) at the anchor bolts in order to assure that the cooling tower is level and plumb.
2. DESIGN OPERATING LOADS: The design operating loads shown in the above table are based upon the volume of water in the collection basin at shutdown. The shutdown water level has been sized to accommodate the maximum allowable flow rates. The design loads are shown for your use as a quick reference. The actual operating load is variable, and dependent upon the design flow rate per cell. Design loads are all based upon the recommended operating water level. Operating levels in excess of that recommended will result in loads exceeding the values stated. Consult a SPX CT representative for greater detail on this or any other subject.
3. WIND & SEISMIC LOADS: Reactions shown are the result of the wind/seismic load being applied perpendicular to the face of the tower structure. Loads are additive to the operating loads. Wind reactions can be calculated by multiplying by P, which is the wind pressure in psf for Imperial units and kgf/m² for metric units. Seismic reactions can be calculated by design G.
4. SHIPPING WEIGHTS AND MAXIMUM OPERATING LOADS: Values shown in table include the optional equipment weights.
5. The tower assembly tolerance applicable to all dimensions is + or - 1/8" (3 mm). Consult suppliers of supporting structure for construction tolerances.
6. The units of measure are in IP (SI) units unless otherwise noted.

NC8401MAN2SGF - Supporting Steel Plan and Details
PRIDCO side inlet
HATO REY, Puerto Rico

MARLEY

ORDER 0

DRAWN BY	CHECKED	REV BY	REV CHK	DATE	APPROVED	DRAWING NUMBER	REV.
ROSILMA VELEZ_250217_063505884 V1	QTC			02/17/25	SYS	RV917927G	

© AS OF DATE(S) IN TITLE BLOCK SPX COOLING TECH, LLC. UNPUBLISHED-ALL RIGHTS RESERVED UNDER COPYRIGHT LAWS.

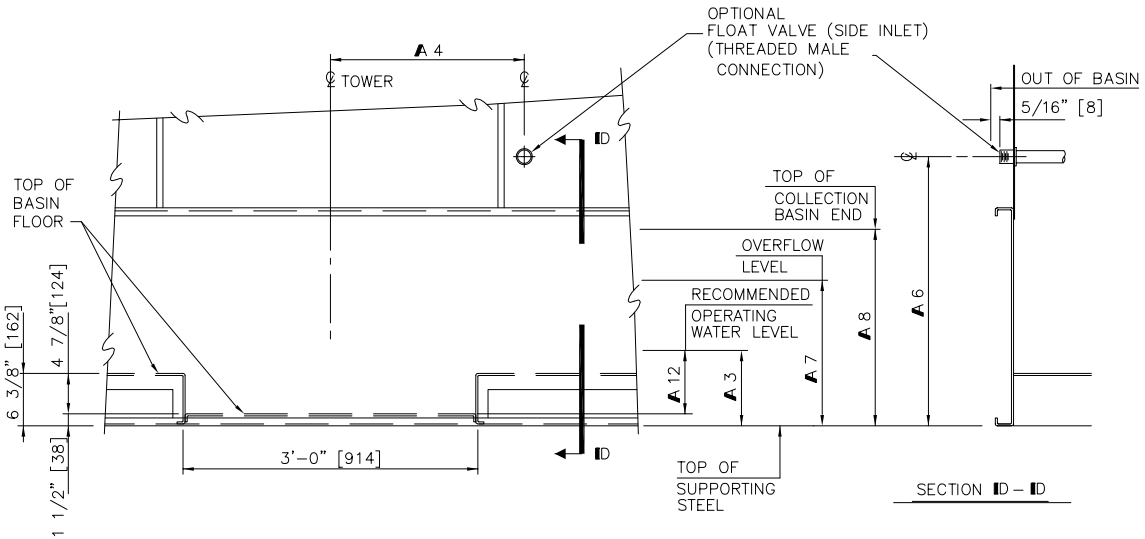

EXTERIOR CELL ELEVATION

(FACES "A" OR "C")

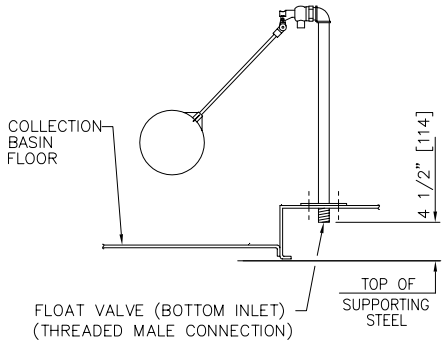

OPTIONAL FLOAT VALVE

(BOTTOM INLET)

SEE "OUTLET PIPING PLAN" DRAWING FOR FLOAT VALVE LOCATION, SIZE & TYPE

TOWER MODEL	DIMENSIONS						
	A3	A4	A6		A7	A8	A12
			1" DIAMETER	2" DIAMETER			
8401	8 1/2" [216]	1'-6 3/16" [462]	2'-3 11/16" [703]	2'-4 3/16" [716]	1'-3" [381]	1'-8" [508]	7" [178]
8402	8 1/2" [216]	1'-10 1/2" [572]	2'-3 11/16" [703]	2'-4 3/16" [716]	1'-3" [381]	1'-8" [508]	7" [178]
8403	8 1/2" [216]	2'-4 3/8" [721]	2'-6 7/8" [784]	2'-7 3/8" [797]	* 1'-5 1/4" [438]	1'-10 1/4" [565]	7" [178]
8405	8 1/2" [216]	1'-11 7/8" [606]	2'-6 7/8" [784]	2'-7 3/8" [797]	* 1'-5 1/4" [438]	1'-10 1/4" [565]	7" [178]
8407	9 1/2" [241]	2'-2 3/8" [670]	2'-6 7/8" [784]	2'-7 3/8" [797]	* 1'-5 1/4" [438]	1'-10 1/4" [565]	8" [203]
8409	9 1/2" [241]	2'-2 3/8" [670]	2'-6 7/8" [784]	2'-7 3/8" [797]	* 1'-5 1/4" [438]	1'-10 1/4" [565]	8" [203]
8410	9 1/2" [241]	2'-5 3/4" [755]	2'-9 15/16" [862]	2'-10 7/16" [875]	1'-7 3/8" [492]	2'-2 1/4" [667]	8" [203]
8411	9 1/2" [241]	2'-5 3/4" [755]	2'-9 15/16" [862]	2'-10 7/16" [875]	1'-9 1/4" [540]	2'-2 1/4" [667]	8" [203]
8412	9 1/2" [241]	2'-5 3/4" [755]	2'-9 15/16" [862]	2'-10 7/16" [875]	1'-9 1/4" [540]	2'-2 1/4" [667]	8" [203]
8413	9 1/2" [241]	2'-5 3/4" [755]	2'-9 15/16" [862]	2'-10 7/16" [875]	1'-11 1/4" [591]	2'-2 1/4" [667]	8" [203]
8414	9 1/2" [241]	2'-5 3/4" [755]	2'-9 15/16" [862]	2'-10 7/16" [875]	1'-11 1/4" [591]	2'-2 1/4" [667]	8" [203]

*** 1'-6 1/2" [470] ON TOWERS WITH 12" OR 14" DIA. SIDE SUCTION OUTLET**

GENERAL NOTES

1. FOR FLOAT VALVE INLET DIAMETER SIZING INFORMATION, SEE DWG. 98-22969 [98-22970].
2. TOLERANCE APPLICABLE TO DIMENSIONS SHOWN ARE DEPENDENT UPON FABRICATION, ASSEMBLY AND CONSTRUCTION TOLERANCES. FABRICATION TOLERANCE IS ±1/16" [2] AND ASSEMBLY TOLERANCE IS ±1/8" [3]. CONSULT SUPPLIERS OF SUPPORTING STRUCTURE FOR CONSTRUCTION TOLERANCE. ALL OF THE DIMENSIONS SHOWN ARE IN INCHES UNLESS OTHERWISE NOTED.
3. ON THE 8401, IF A SUMP OR BOTTOM OUTLET OPTION IS SUPPLIED WITH AN ANTI-VORTEX PLATE, A FLOAT VALVE MAY NOT BE IN THE SAME CELL.
4. ALL DIMENSIONS SHOWN INSIDE OF BRACKETS[ ] ARE IN MILLIMETERS UNLESS OTHERWISE NOTED.
5. REFER TO SUPPORTING STEEL DRAWING FOR DESIGN OPERATING LOADS.
6. THE RECOMMENDED WATER LEVEL IS FOR CELLS WITH OUTLETS. THE OPERATING WATER LEVEL IN ADJACENT CELLS MAY BE GREATER DEPENDING ON THE GPM, NUMBER OF OUTLES AND FLUME ARRANGEMENT.

I-P [SI] UNITS

DRAWN BY	DRAWN DATE	COLLECTION BASIN WATER LEVEL DETAILS				SPX COOLING TECHNOLOGIES	
MA_STD	01/22/2016	8401 THRU 8414 TOWERS					
CHECKED BY	CHECKED DATE						
ABDULFATTAH	01/26/2016						
RELEASED BY	RELEASED DATE	ECM NUMBER	ORDER NUMBER	FORMAT	PLOT	DRAWING NUMBER	REV.
ABDULFATTAH	01/27/2016	20945	-/-	ANSI B	1=1	Z0341072	A

© as of date(s) in title block SPX Cooling Technologies
Unpublished-All rights reserved under copyright laws.

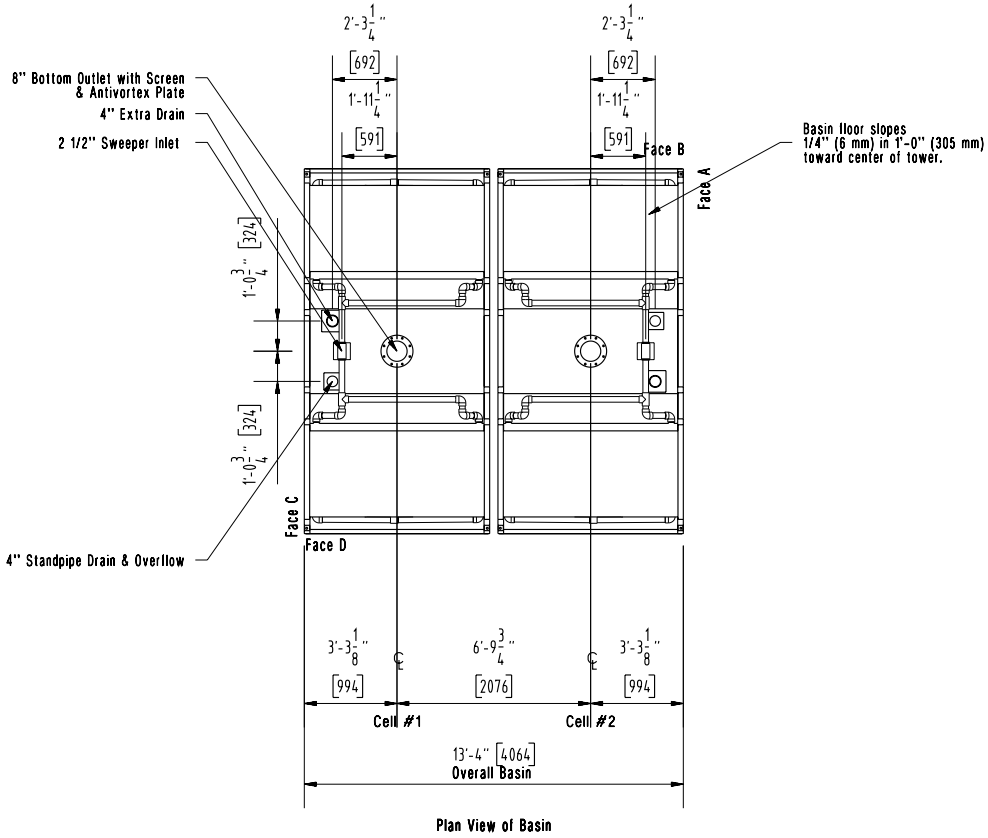

Plan View of Basin

NOTES

1. Flanged connections conform to Class 125 ANSI B16.1 specification. The bolt holes straddle the centerlines.
2. All piping supports are by others. Do NOT support outlet piping from the tower.
3. The collection basin piping accessories shown on this drawing are furnished by SPX CT. This includes a full faced gasket. Flat faced flange, fasteners and seal washers attachment to the outlet and equalizer are supplied by others. The use of a flange other than a flat faced flange will damage the collection basin floor.
4. The diameter of the bottom outlet equalizer option is based on a SPX CT standard using 20 percent of a tower's outlet design flow and a head differential between two adjacent towers of 1" (25 mm).
5. The standpipe overflow is to be field installed by others.
6. The design operating loads shown in the table on the Grillage Details drawing are based upon the volume of water in the collection basin at shutdown. The shutdown water level has been sized to accommodate the maximum allowable flow rates. The actual operating load is variable, and is dependent upon the design flow rate per cell. Design loads are all based upon the recommended operating water level. Operating levels in excess of that recommended can result in loads exceeding values stated. Consult a SPX CT representative for greater detail on this or any other subject.
7. The tower assembly tolerance applicable to all dimensions is + or – 1/8" (3 mm). Consult suppliers of supporting structure for construction tolerances.
8. The units of measure are in IP (SI) units unless otherwise noted.

NC8401MAN2SGF – Piping Plan
PRIDCO side inlet
HATO REY, Puerto Rico

MARLEY

ORDER 0

DRAWN BY	CHECKED	REV BY	REV CHK	DATE	APPROVED	DRAWING NUMBER	REV.
ROSILMA VELEZ_250217_063505884 V1	QTC			02/17/25	SYS	RV917927P	

© AS OF DATE(S) IN TITLE BLOCK SPX COOLING TECH, LLC. UNPUBLISHED-ALL RIGHTS RESERVED UNDER COPYRIGHT LAWS.

MARLEY®

makeup float valve

Designed specifically for cooling tower duty, Marley makeup water float valves provide long life with little maintenance. Typically, valves are available in complete kits which include valve, float arm and float to fit a specific application.

When installed some trial and error adjustment of the float valve may be required to balance the makeup water with tower operation. Ideally, the float level valve setting will be when no water is wasted through the overflow at pump shutdown. However, the water level after pump start-up must be deep enough to assure positive pump suction.



- **Heavy duty red brass body construction**
- **Buna rubber seal disc assures positive shut-off**
- **Free flow outlet**
- **Fully adjustable**
- **Available from 3/8" through 2" diameters**
- **Floats available in polypropylene or copper**

Maintenance Know How

Maintain inlet water pressure at or below 50 psig (3.45 bar)to ensure valve seal life

SPX COOLING TECHNOLOGIES, INC.
7401 WEST 129 STREET
OVERLAND PARK, KS 66213 USA
913 664 7400 | spxcooling@spx.com
spxcooling.com

SP-FV | ISSUED 06/2017
COPYRIGHT © 2017 SPX CORPORATION
In the interest of technological progress, all products are subject to design and/or material change without notice.

SPX®

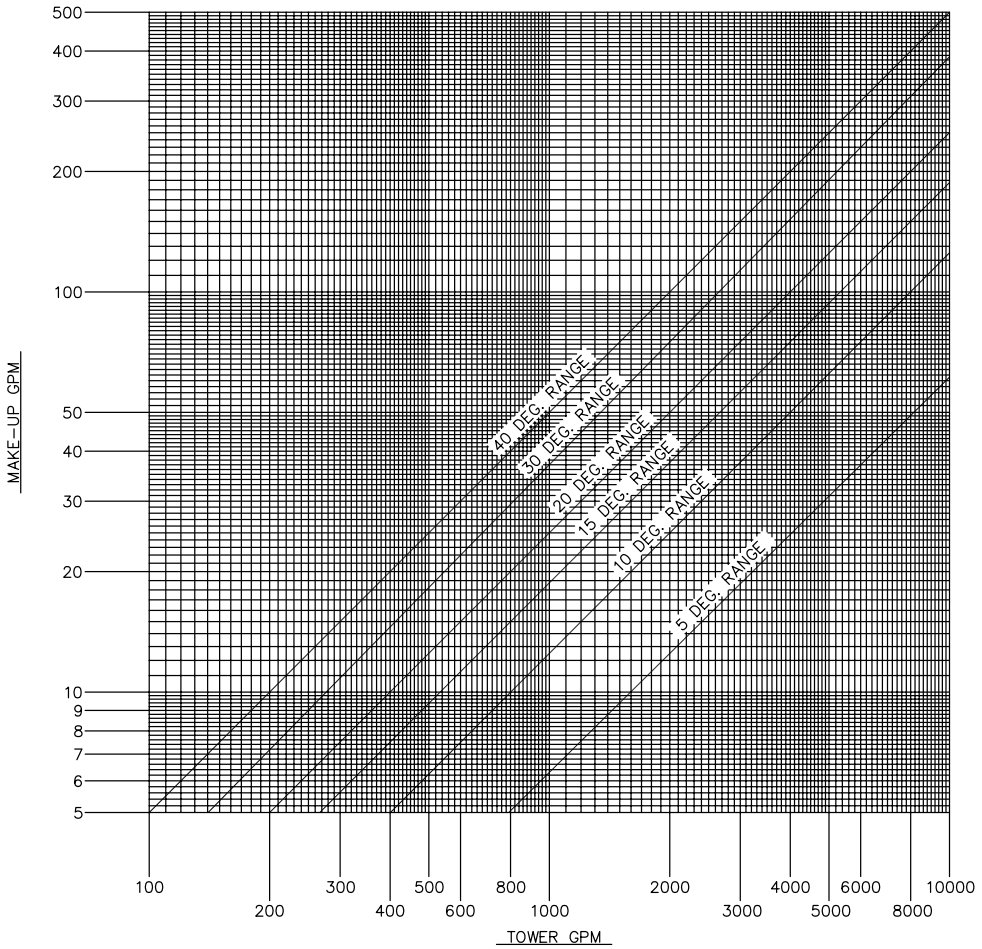

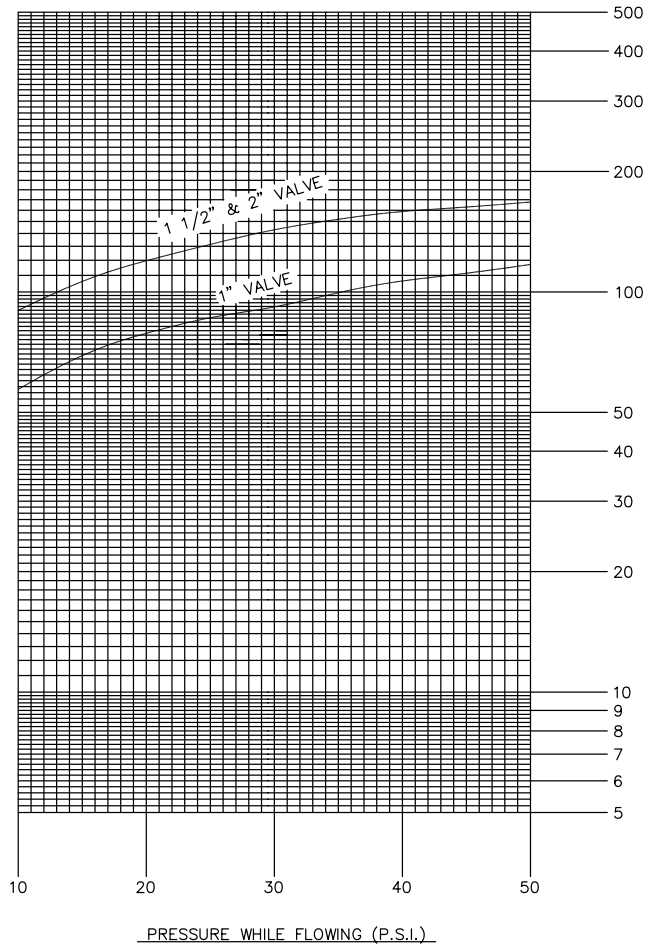

SIZING PROCEDURE

1. USING THE TOWER DESIGN FLOW RATE AND COOLING RANGE, DETERMINE THE MAKE–UP FLOW RATE.
2. USING THE MAKE–UP FLOW RATE AND THE WATER PRESSURE AT THE END OF THE CUSTOMER PIPING WHILE FLOWING THAT RATE, SELECT THE SMALLEST VALVE ABOVE THE INTERSECTION POINT.
3. MAKE–UP FLOW RATES ARE BASED ON USING THE REQUIRED BLEED–OFF TO MAINTAIN THREE CONCENTRATIONS. FOR TWO CONCENTRATIONS, MULTIPLY THE MAKE–UP FLOW RATE BY 1.36 BEFORE SELECTING THE VALVE.

GENERAL NOTES

1. RECOMMENDED MAXIMUM STATIC PRESSURE AT THE VALVE IS 50 P.S.I.G.
2. FOR APPLICATIONS THAT ARE BEYOND THE GRAPH, USE THE FOLLOWING FORMULA:
   MAKE–UP G.P.M.= .00125 X RANGE X TOWER G.P.M.

SEE DRAWING 98–22970 FOR SI UNITS.

I–P UNITS

ECO NUMBER	REV. BY	CHECKED								
7670	DMJ		ROBERT FLOAT VALVE INFORMATION FAP					SPX Cooling Technologies Baltke | Hamon Dry Cooling | Marley		
REV. DATE	DRAWN BY		DATE	CHECKED	APPROVED	ORDER NUMBER	PLOT	DRAWING NUMBER	REV.	
05/24/2006	D. JENKINS		06/03/1998		MPC		1=3	98–22969	B	

©as of date(s) in title block SPX Cooling Technologies
Unpublished–All rights reserved under copyright laws.

TOWER MODEL	DIMENSIONS
	A7
8401	1'-3" [381]
8402	1'-3" [381]
8403	1'-5 1/4" [438]
8405	1'-5 1/4" [438]
8407	1'-5 1/4" [438]
8409	1'-5 1/4" [438]
8410	1'-7 3/8" [492]
8411	1'-9 1/4" [540]
8412	1'-9 1/4" [540]
8413	1'-11 1/4" [591]
8414	1'-11 1/4" [591]

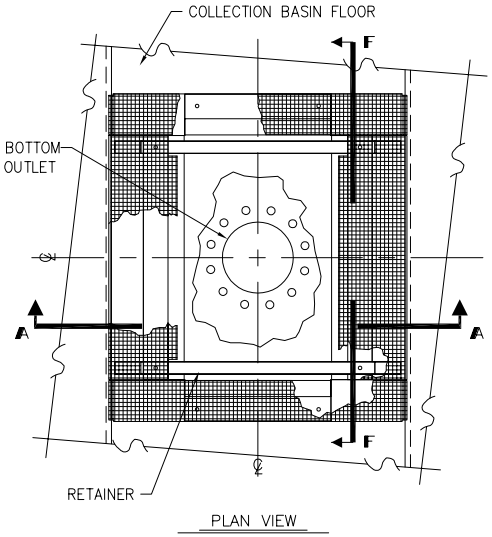

PLAN VIEW

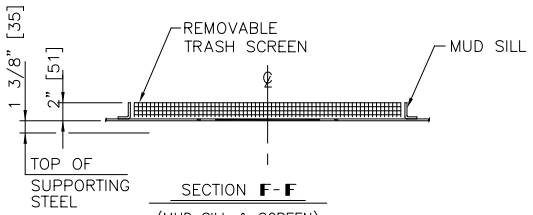

SECTION F-F

(MUD SILL & SCREEN)
(FOR OUTLETS WITHOUT ANTI-VORTEX PLATE)

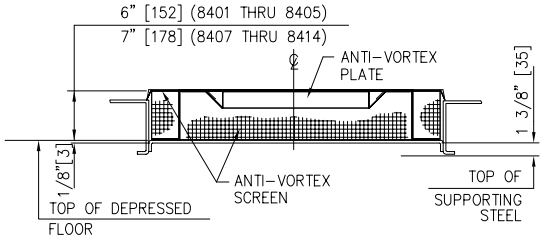

SECTION A-A

(ANTI-VORTEX PLATE & SCREEN)

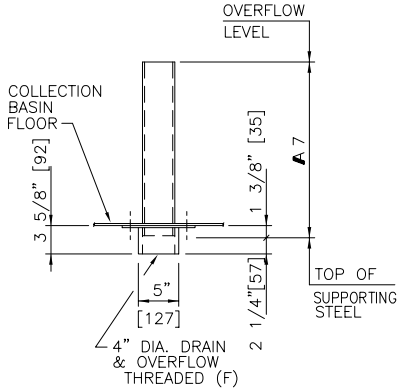

STANDARD STANDPIPE
DRAIN & OVERFLOW
(TYPICAL ALL CELLS)

BOTTOM OUTLET WITH ANTI-VORTEX PLATE AND SCREEN

BOTTOM OUTLET WITH MUD SILL AND SCREEN

BOTTOM OUTLET WITHOUT SCREEN

BOTTOM OUTLET EQUALIZER

NOTE: ANTI-VORTEX PLATE AND SCREEN ARE NOT PROVIDED FOR BOTTOM OUTLET EQUALIZER.

SEE "OUTLET PIPING PLAN" DRAWING FOR OUTLET DIAMETER

GENERAL NOTES

1. ALL ACCESSORIES SHOWN ARE PROVIDED WITH THE COOLING TOWER.
2. ALL PIPING SUPPORTS ARE BY OTHERS. DO NOT SUPPORT PIPING FROM TOWER.
3. FLANGE DRILLING SHOWN CONFORMS TO CLASS 125 ANSI B16.1. BOLT HOLES WILL STRADDLE CENTERLINE OF AN OUTLET. THE OUTLET PIPING ATTACHMENT REQUIRES USE OF A FLAT FACED FLANGE, FASTENERS AND SEAL WASHERS(SUPPLIED BY OTHERS) AND A FULL FACED GASKET (PROVIDED WITH THE COOLING TOWER).
4. TOLERANCE APPLICABLE TO DIMENSIONS SHOWN ARE DEPENDENT UPON FABRICATION, ASSEMBLY AND CONSTRUCTION TOLERANCES. FABRICATION TOLERANCE IS ±1/16" [2] AND ASSEMBLY TOLERANCE IS ±1/8" [3]. CONSULT SUPPLIERS OF SUPPORTING STRUCTURE FOR CONSTRUCTION TOLERANCE. ALL OF THE DIMENSIONS ARE IN INCHES UNLESS OTHERWISE NOTED.
5. ALL DIMENSIONS SHOWN INSIDE OF BRACKETS[ ] ARE IN MILLIMETERS UNLESS OTHERWISE NOTED.

I-P [SI] UNITS

DRAWN BY	DRAWN DATE	STANDARD BOTTOM OUTLET PIPING DETAILS				SPX COOLING TECHNOLOGIES	
MA_STD	01/22/2016	8401 THRU 8414 TOWERS					
CHECKED BY	CHECKED DATE						
ABDULFATTAH	01/26/2016						
RELEASED BY	RELEASED DATE	ECM NUMBER	ORDER NUMBER	FORMAT	PLOT	DRAWING NUMBER	REV.
ABDULFATTAH	01/27/2016	20945	-/-	ANSI B	1=1	Z0341074	A

© as of date(s) in title block SPX Cooling Technologies
Unpublished-All rights reserved under copyright laws.

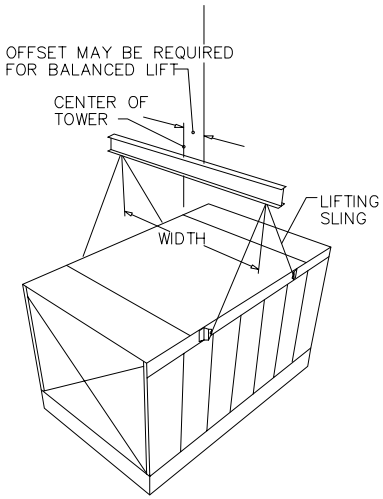

TOWER UNITS WITH
HOISTING CLIPS AT THE TOP

8401 THRU 8407

TOP MODULE OF 8410, 8411, 8412, 8413 & 8414

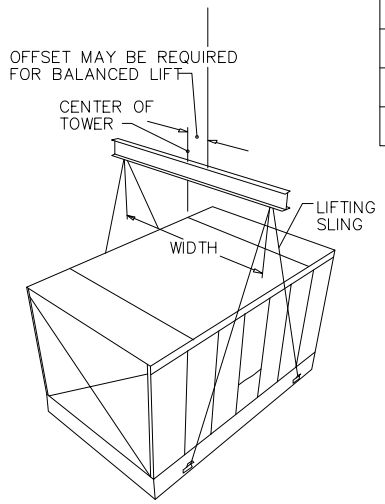

TOWER UNITS WITH
HOISTING CLIPS AT THE BOTTOM

8409

BOTTOM MODULE OF 8410, 8411, 8412, 8413 & 8414

TOWER MODEL	TOWER WIDTH	TOWER LENGTH	TOWER HEIGHT	MINIMUM SLING LENGTH	HOIST CLIP SPACING
8401	6'–7" [2007]	12'–10" [3912]	10'–2 1/2" [3105]	5'–6" [1676]	5'–10" [1778]
8402	8'–5" [2565]	14'–2" [4318]	10'–3" [3124]	6'–0" [1829]	6'–6" [1981]
8403	8'–5" [2565]	18'–2" [5537]	11'–11 1/4" [3639]	8'–0" [2438]	9'–0" [2743]
8405	9'–10 3/4" [3016]	19'–11" [6071]	11'–11 1/4" [3639]	8'–0" [2438]	8'–10 1/2" [2705]
8407	11'–10 3/4" [3626]	21'–0" [6401]	11'–11 1/4" [3639]	8'–6" [2591]	9'–4" [2845]
8409	13'–10 3/4" [4235]	22'–5" [6833]	11'–11 1/4" [3639]	17'–6" [5334]	18'–8 1/2" [5702]
8410 TOP	11'–10 3/4" [3626]	22'–5" [6833]	9'–3 1/4" [2826]	9'–0" [2743]	10'–2" [3099]
8410 BOTTOM	11'–10 3/4" [3626]	22'–5" [6833]	6'–8 3/4" [2048]	16'–6" [5029]	18'–8 1/2" [5702]
8411 TOP	11'–10 3/4" [3626]	22'–5" [6833]	9'–3 1/2" [2832]	9'–0" [2743]	10'–2" [3099]
8411 BOTTOM	11'–10 3/4" [3626]	22'–5" [6833]	9'–3" [2819]	16'–6" [5029]	18'–8 1/2" [5702]
8412 TOP	13'–10 3/4" [4235]	22'–5" [6833]	9'–3 1/2" [2832]	9'–0" [2743]	10'–2" [3099]
8412 BOTTOM	13'–10 3/4" [4235]	22'–5" [6833]	9'–3" [2819]	16'–6" [5029]	18'–8 1/2" [5702]
8413 TOP	11'–10 3/4" [3626]	22'–5" [6833]	11'–2 1/4" [3410]	9'–0" [2743]	10'–2" [3099]
8413 BOTTOM	11'–10 3/4" [3626]	22'–5" [6833]	11'–0" [3353]	16'–6" [5029]	18'–8 1/2" [5702]
8414 TOP	13'–10 3/4" [4235]	22'–5" [6833]	11'–2 1/4" [3410]	9'–0" [2743]	10'–2" [3099]
8414 BOTTOM	13'–10 3/4" [4235]	22'–5" [6833]	11'–0" [3353]	16'–6" [5029]	18'–8 1/2" [5702]

NOTES:

1. ALL HOISTING CLIP HOLES ARE 1 1/4" [32].
2. OVERALL LENGTH OF SHACKLE PIN SHOULD NOT EXCEED 5 1/4" [133].
3. FOR OVERHEAD LIFTS OR WHERE ADDITIONAL SAFETY IS REQUIRED, ADD SLINGS BENEATH THE TOWER UNIT.
4. ALL DIMENSIONS SHOWN INSIDE OF BRACKETS[ ] ARE IN MILLIMETERS UNLESS OTHERWISE NOTED.
5. REFERENCE SUPPORT STEEL DRAWINGS FOR WEIGHT OF HEAVIEST LIFT.

I–P [SI] Units

© as of date(s) in title block SPX Cooling Technologies
Unpublished–All rights reserved under copyright laws.

DRAWN BY	DRAWN DATE						
MEIERAREND_S	11/05/2018	HOISTING DETAILS 8401 THRU 8414 TOWERS				MARLEY	
CHECKED BY	CHECKED DATE						
ABDULFATTAH	11/30/2018						
RELEASED BY	RELEASED DATE	ECM NUMBER	ORDER NUMBER	FORMAT	PLOT	DRAWING NUMBER	REV.
ABDULFATTAH	11/30/2018	23975	–/–	ANSI B	1=1	Z0628615	B

TOWER MODEL	A
8401 THRU 8414	6" [152]
8422	8" [203]

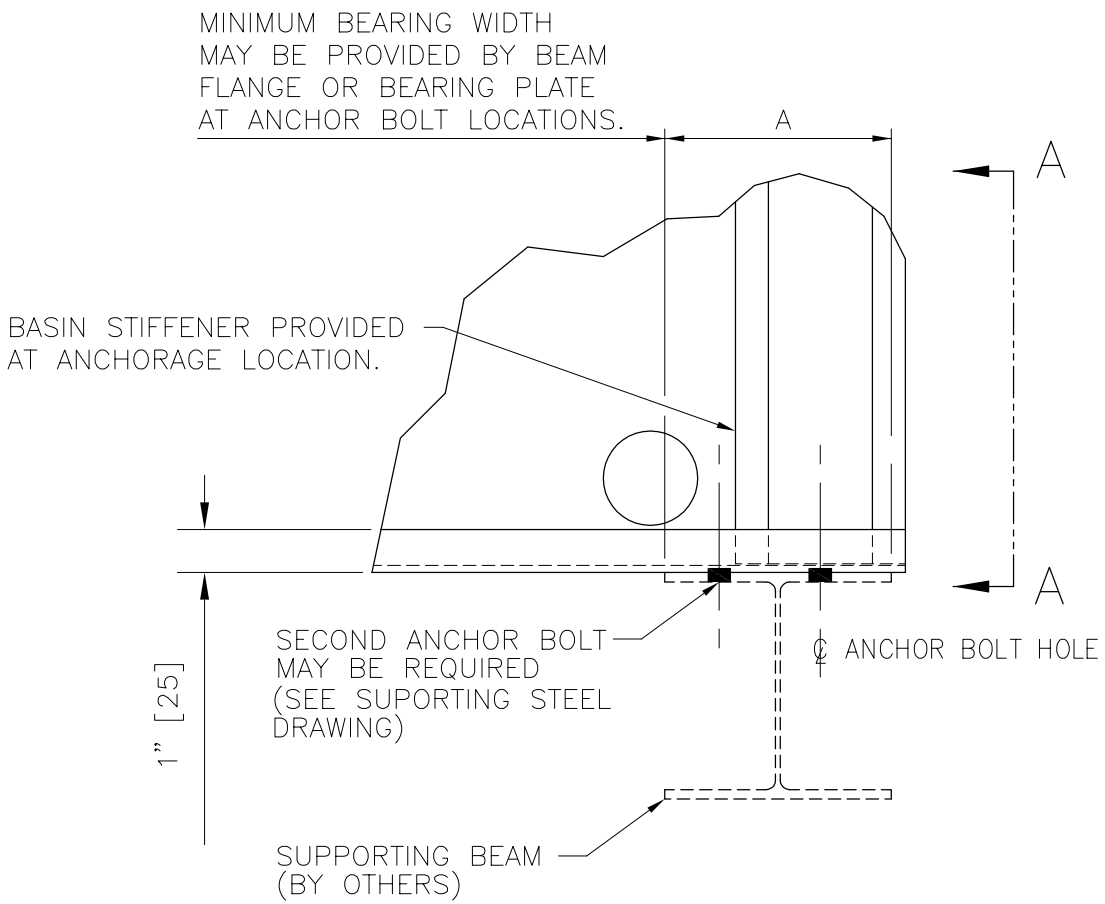

SUPPORT BEARING DETAILS

(PARTIAL CASED FACE A OR C ELEVATION)

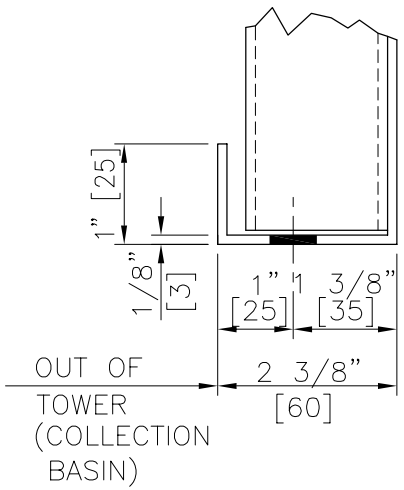

SECTION A–A

(LOUVER FACE B OR D)

GENERAL NOTES

1. TOLERANCE APPLICABLE TO DIMENSIONS SHOWN ARE DEPENDENT UPON FABRICATION, ASSEMBLY AND CONSTRUCTION TOLERANCES. FABRICATION TOLERANCE IS ±1/16" [2] & ASSEMBLY TOLERANCE IS ±1/8" [3]. CONSULT SUPPLIERS OF SUPPORTING STRUCTURE FOR CONSTRUCTION TOLERANCE. ALL OF THE DIMENSIONS SHOWN ARE IN INCHES UNLESS OTHERWISE NOTED.
2. ALL DIMENSIONS SHOWN INSIDE OF BRACKETS[ ] ARE IN MILLIMETERS UNLESS OTHERWISE NOTED.

I–P [SI] UNITS

DRAWN BY	DRAWN DATE	SUPPORT BEARING DETAILS NC8401 THRU NC8422 TOWERS				MARLEY	
SCHENK_STD	07/20/2016						
CHECKED BY	CHECKED DATE						
RELEASED BY	RELEASED DATE	ECM NUMBER	ORDER NUMBER	FORMAT	PLOT	DRAWING NUMBER	REV.
JENKINS_STD	07/28/2016	21681	–/–	ANSI A	1=1	Z0628641	A

© as of date(s) in title block SPX Cooling Technologies
Unpublished–All rights reserved under copyright laws.

OPTIONAL EQUIPMENT

Plenum Walkway

The Plenum Walkway is installed above the collection basin depressed floor. Begin by attaching support beams **L56** to the columns.
Determine your tower model and water make-up arrangement. Then refer to the grating panel key plans for grating panel orientation. Attach panels using screws **T07** as shown.
There may be a grating panel **L60** with a cutout for a float valve, or water sensor level probe. Position the cutout to provide adequate clearance for these options.
This manual provides details for a walkway cutout without a grating cutout, or only one cutout. If your tower walkway has multiple cutouts consult an additional installation drawing in your literature packet.

FIND NO.	DESCRIPTION
T07	3/8" X 1" TAP SCREW
VP7	BOLT, HF 12MM X 25MM
X62	NUT, HF M12

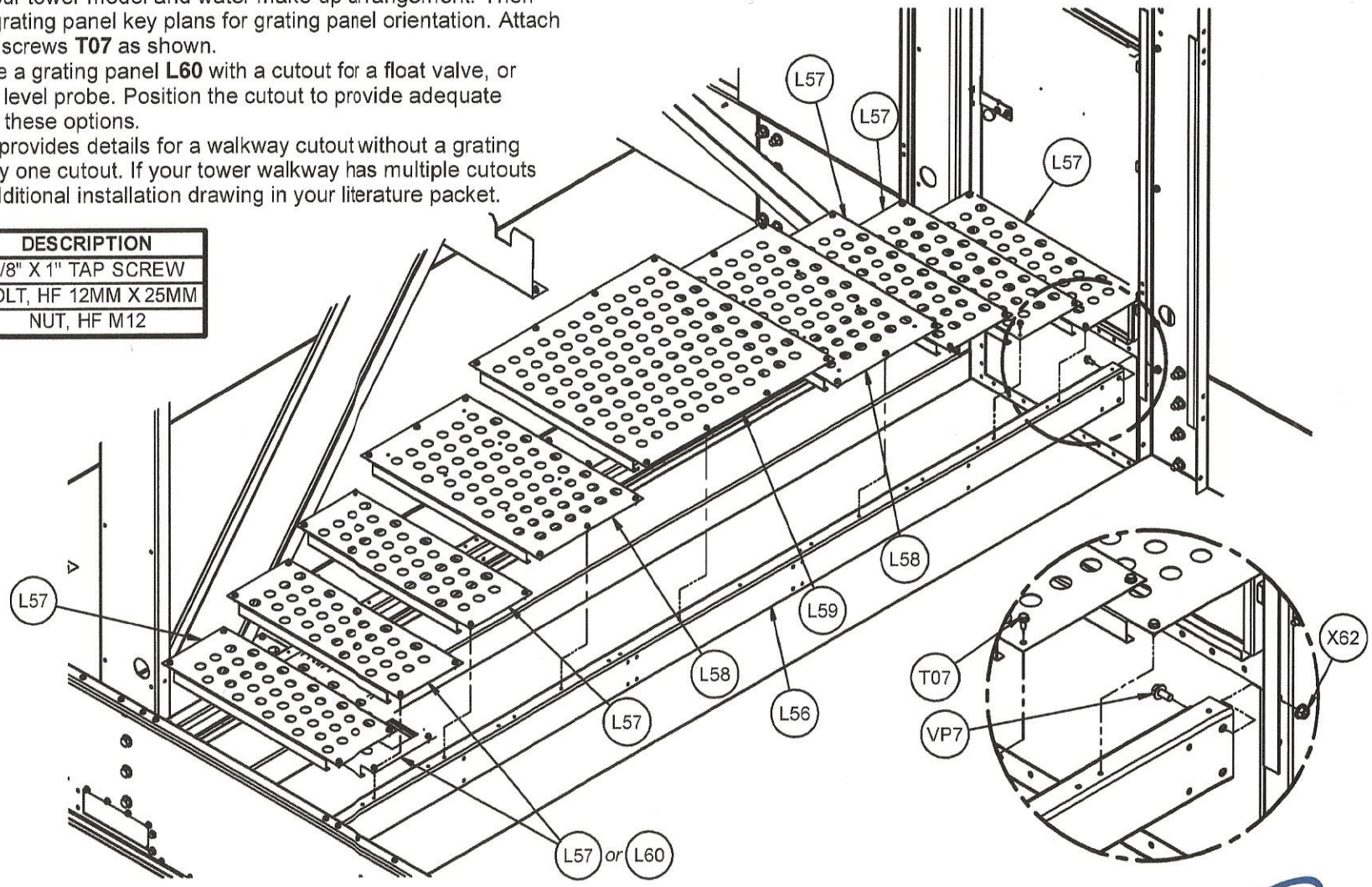

OPTIONAL EQUIPMENT

Mechanical Equipment Platform

Begin installation of mechanical equipment platform by attaching clips **K54** to collection basin side. Attach beam **L56** between clips as shown. Attach platform legs **K52** to platform beam and plenum walkway beam. Attach panel supports **K50** to legs, and attach panel support **K51** to leg and column.

FIND NO.	DESCRIPTION
VP3	BOLT, HF 10MM X 25MM
VP7	BOLT, HF 12MM X 25MM
X61	NUT, HF M10
X62	NUT, HF M12

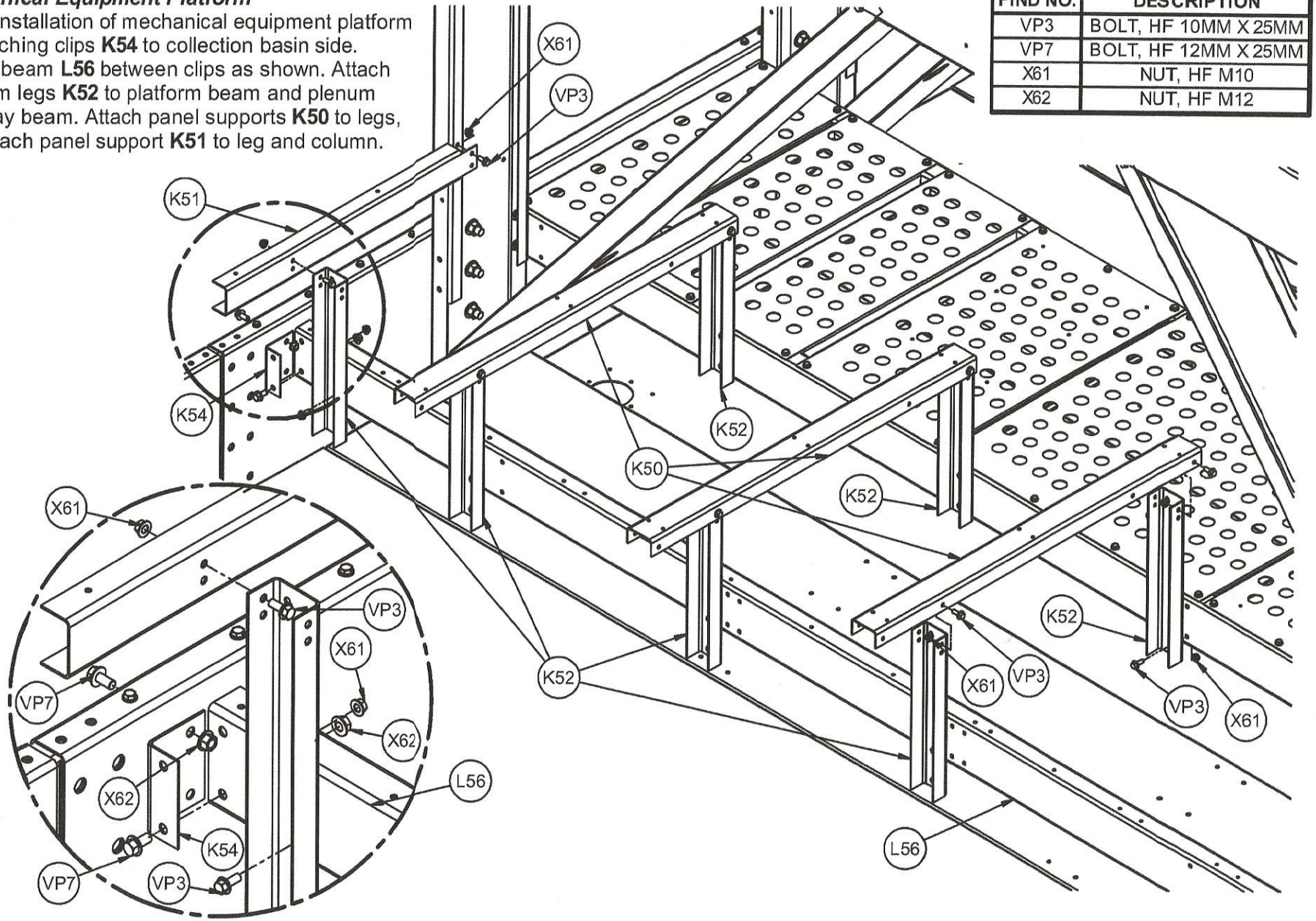

Install grating panels **K57** and **K58** with tap screws **T07** for galvanized tower and bolts **TBA** for stainless steel tower as shown.

FIND NO.	DESCRIPTION
T07	3/8" X 1" TAP SCREW
TBA	BOLT M10 X 25

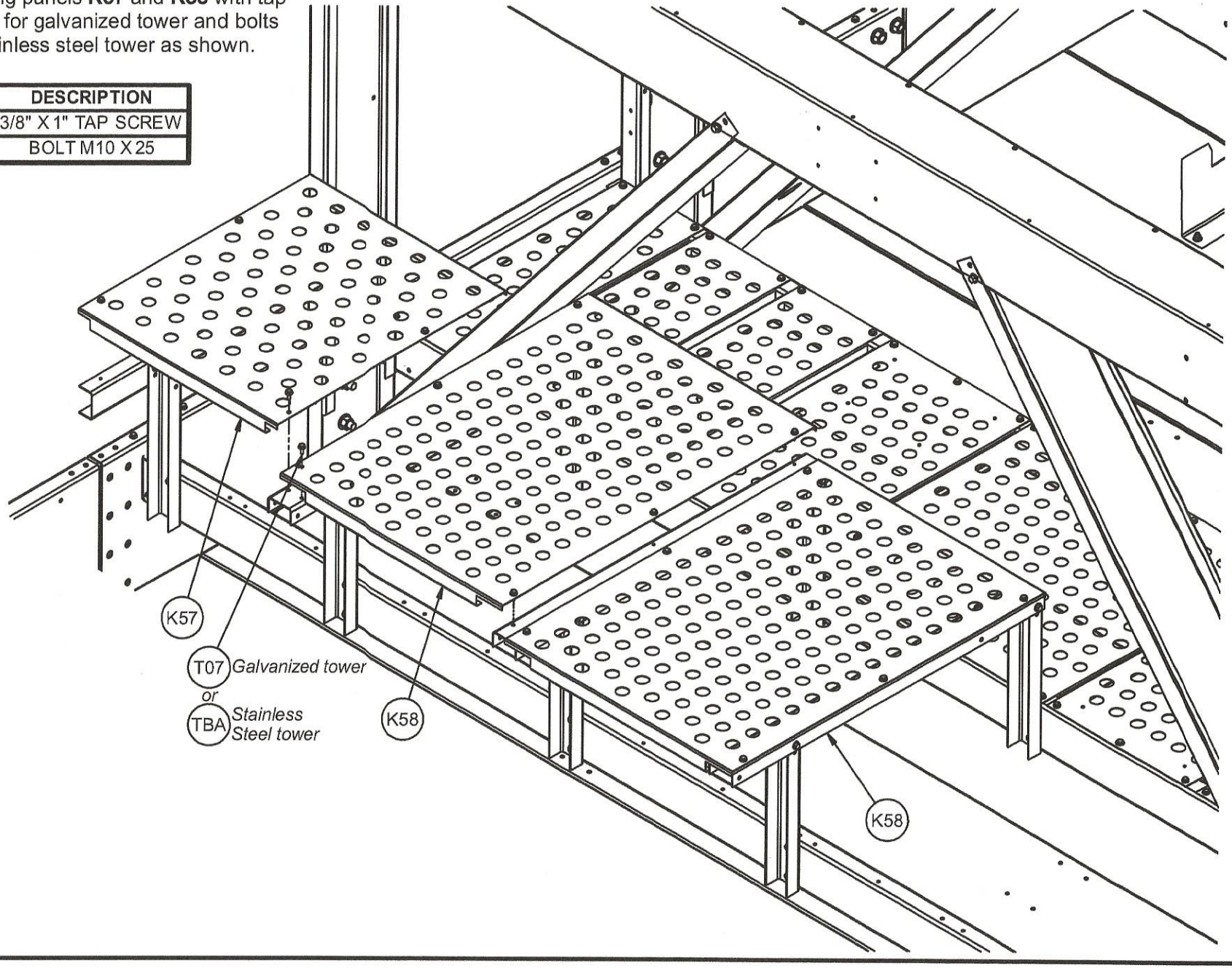

TOWER MODEL	WALKWAY AND PLATFORM WEIGH (IN POUNDS)
NC8303	385
NC8304	420
NC8305	515
NC8306	580
NC8307	580
NC8309	945
NC8310	635
NC8311	635
NC8312	1065

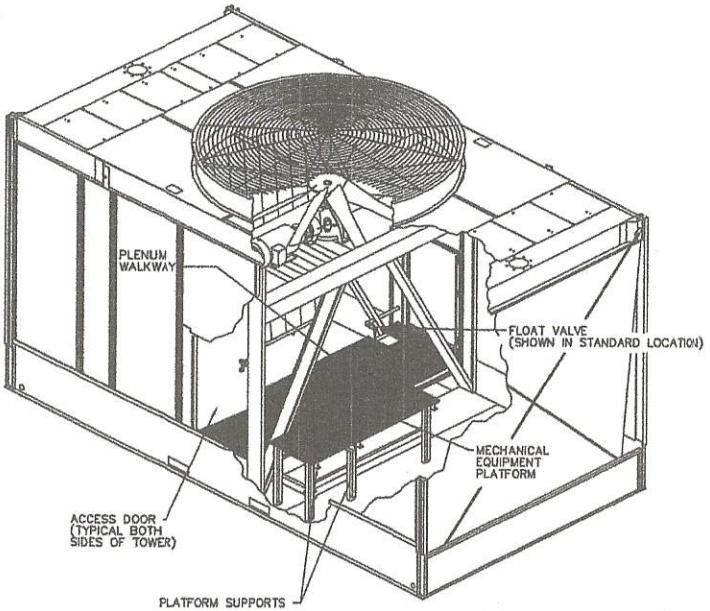

INTERIOR MECHANICAL EQUIPMENT ACCESS PLATFORM DETAILS [5]

(TYPICAL MODELS NC8303 THRU NC8309. MODEL NC8307 SHOWN)

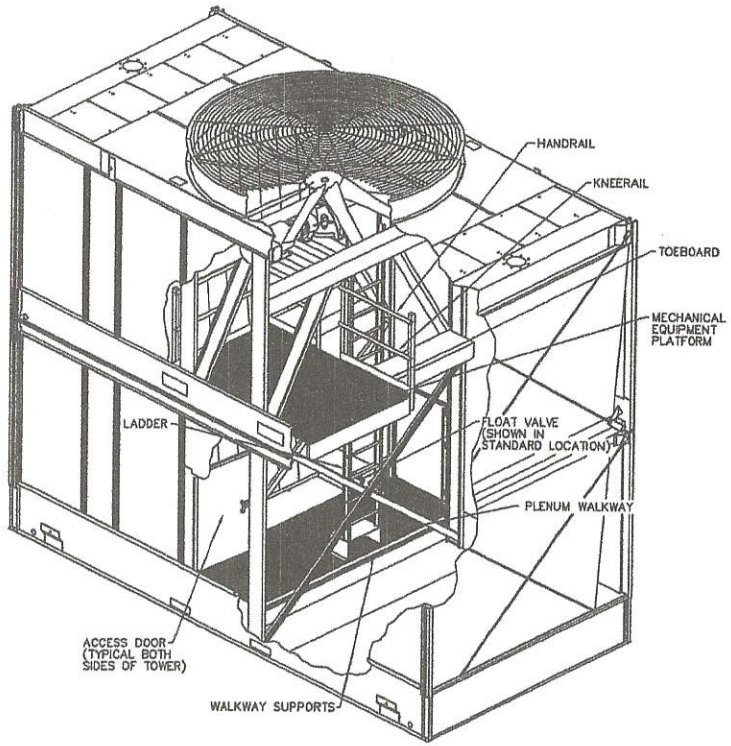

INTERIOR MECHANICAL EQUIPMENT ACCESS PLATFORM DETAILS [5]

(TYPICAL MODELS NC8310 THRU NC8312. MODEL NC8310 SHOWN)

GENERAL NOTES

1. THE INTERIOR MECHANICAL EQUIPMENT PLATFORM OPTION CONSISTS OF THE PLENUM WALKWAY SHOWN, PLUS ELEVATED PLATFORMS FOR ACCESS TO MECHANICAL EQUIPMENT ON MODELS NC8303 THRU NC8312. A LADDER IS INCLUDED ON MODELS NC8310, NC8311 AND NC8312 FOR ACCESS TO MECHANICAL EQUIPMENT PLATFORM ABOVE PLENUM WALKWAY. MECHANICAL EQUIPMENT ON MODELS NC8301 AND NC8302 IS ACCESSIBLE FROM PLENUM WALKWAY ITSELF.
2. PLATFORM SUPPORTS ARE 11 GAUGE HEAVY MILL GALVANIZED STEEL. WALKWAYS ARE HOT DIP GALVANIZED BAR GRATING UTILIZING 1" X 1/8" BEARING BARS.

   ON MODELS NC8310, NC8311 & NC8312, HANDRAILS AND KNEERAILS ARE FABRICATED FROM 1.660" O.D. MILL GALVANIZED STRUCTURAL TUBING. TOEBOARDS ARE 16 GAUGE HEAVY MILL GALVANIZED STEEL. LADDER IS ALL ALUMINUM CONSTRUCTION CONSISTING OF 3" X 1 1/8" I-BEAM SIDE RAILS AND 1 1/4" DIAMETER SERRATED RUNGS.
3. ELEVATION OF PLENUM WALKWAY GRATING IS ABOVE OVERFLOW LEVEL.
4. DISTANCE FROM MECHANICAL EQUIPMENT PLATFORM TO FAN EXCEEDS 7'-0" ON MODELS NC8303 THRU NC8309, AND IS 6'-9 3/4" ON MODELS NC8310 THRU NC8312.
5. FAN MOTOR MUST BE LOCKED OUT AND INOPERABLE BEFORE ENTERING TOWER. THIS WARNING HAS BEEN PLACED ON BOTH ACCESS DOORS.
6. ADD WALKWAY AND PLATFORM WEIGHT TO TOWER OPERATING WEIGHT SHOWN ON SUGGESTED SUPPORTING STEEL DRAWING FOR TOTAL LOAD.
7. MAINTENANCE OPTIONS NOT SHOWN, BUT ALSO AVAILABLE:
   - A) LADDER UP TO AND PERIMETER HANDRAIL AROUND FAN DECK.
   - B) SAFETY CAGE TO FAN DECK (RECOMMENDED BY O.S.H.A. FOR IN-LINE LADDERS LONGER THAN 20'-0", BUT LESS THAN 30'-0").
   - C) LADDER EXTENSION (FOR ELEVATED TOWERS).
   - D) ACCESS DOOR PLATFORM (FOR ELEVATED TOWERS).
   - E) SECOND FAN DECK LADDER OPTION (REQUIRES FIELD MODIFICATION OF HANDRAILS. SEE LADDER AND HANDRAIL DRAWING FOR LOCATION).
   - F) FAN DECK EXTENSION ON SIDE OPPOSITE LADDER. AVAILABLE WITH SINGLE LADDER OPTIONS ONLY.
   - G) SAFETY GATE AT LADDER OPENINGS.
8. TOLERANCE APPLICABLE TO DIMENSIONS SHOWN ARE DEPENDENT UPON FABRICATION, ASSEMBLY, AND CONSTRUCTION TOLERANCES. MARLEY'S FABRICATION TOLERANCE IS ±1/16" AND ASSEMBLY TOLERANCE IS ±1/8". CONSULT SUPPLIERS OF SUPPORTING STRUCTURE FOR CONSTRUCTION TOLERANCES.

(REFERENCE DRAWING 01-4404 FOR NC8310 THRU NC8312 WITH SERIES 3000 GEAREDUCER) I-P UNI

ECO NUMBER		INTERIOR MECHANICAL EQUIP. ACCESS PLATFORM NC CLASS 8303 THRU 8312					Marley	
1448								
REV. BY	CHECKED							
DA/S	MPC							
REV. DATE	DRAWN BY	DATE	CHECKED	APPROVED	ORDER NUMBER	PLOT	DRAWING NUMBER	REV
09/07/2001	JHH	04/17/2001		MPC		1=28	00-4882	A

© as of date(s) in title block Marley Cooling Technologies Unpublished-All rights reserved under copyright laws.

Approved Archive Print

MARLEY®

accessories

NC® **easy-fit** guardrail and safety cage

The new guardrail system for NC towers offers faster assembly and easier maintenance. A significant reduction in parts and clear instructions ensure that your guardrails are assembled accurately and securely.

Pre-assembled parts make installation easy

Complies with OSHA standards

Integrated toe board

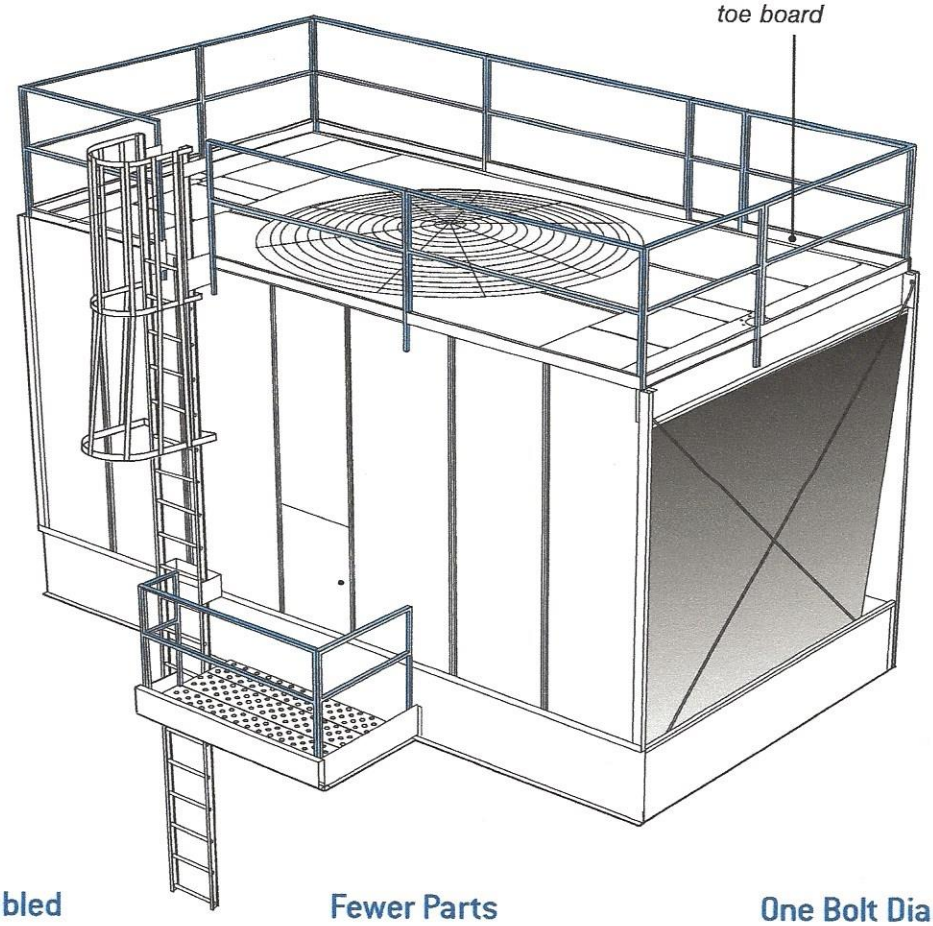

Pre-Assembled

Guardrails are shipped as large welded sections that are self fixturing for easy and simple installation.

Fewer Parts

With 130 fewer parts to contend with, you save both time and effort.

One Bolt Diameter

No more switching tools. Install your rails quickly without searching for the right tool for a variety of bolt sizes.

easy-fit guardrail and safty cage

Clear Instructions

User-friendly installation instructions take the guesswork out of assembling your guardrails.

Go from this... *to this.*

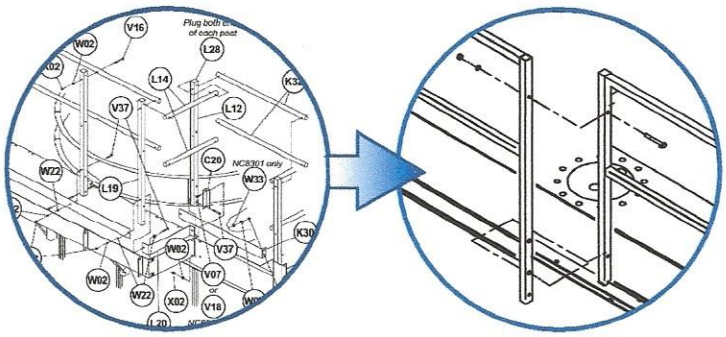

Simpler is Safer

A significant reduction in parts and new clear instructions ensure that your easy fit guardrails are assembled accurately and securely.

Guardrail single cell example

Element	Old Design	New Design	Reduction
Steel parts total	41	11	73%
Plastic plugs total	56	0	100%
Hardware pieces total	262	132	50%
Number of unique pieces	8	4	50%
Number of bolt diameters	2	1	50%

Safety cage example

Element	Old Design	New Design	Reduction
Cage pieces total	27	4	85%
Hardware pieces total	274	128	53%
Number of unique pieces	7	3	57%
No. of bolt/screw diameters	2	1	50%

SPX COOLING TECHNOLOGIES, INC.
7401 WEST 129 STREET
OVERLAND PARK, KS 66213 USA
913 664 7400 | spxcooling@spx.com
spxcooling.com

ACC-NC-2B | ISSUED 11/2016
COPYRIGHT © 2016 SPX CORPORATION
In the interest of technological progress, all products are subject to design and/or material change without notice.

SPX

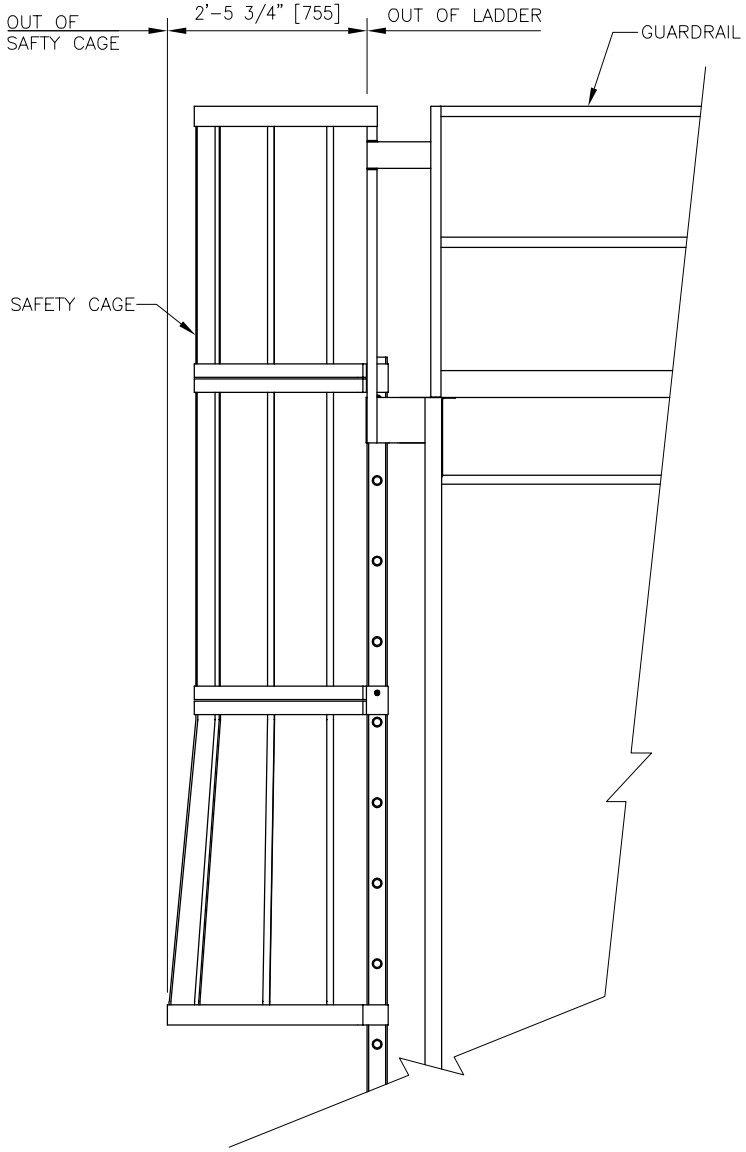

LADDER WITH CAGE ELEVATION

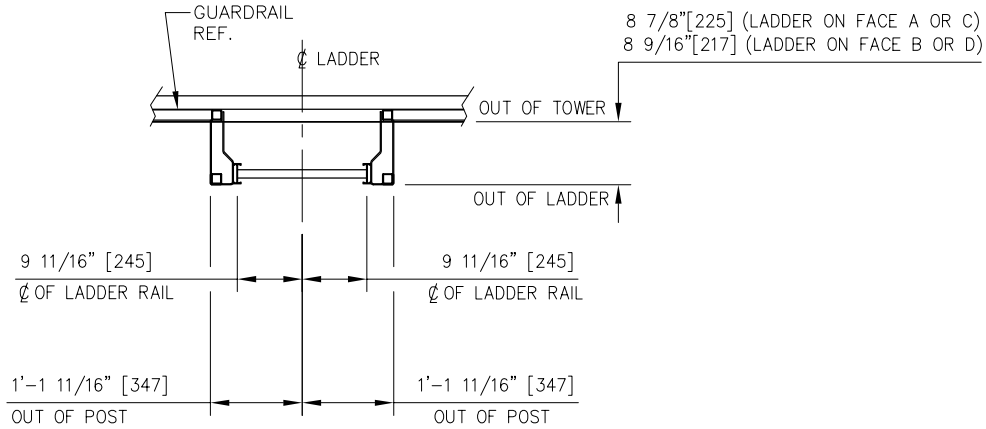

LADDER DETAIL
(PLAN VIEW)

NOTES

1. THE COOLING TOWER FAN DECK IS NOT CONSIDERED AN ELEVATED WORKING PLATFORM SINCE NORMAL RECOMMENDED MAINTENANCE PROCEDURES ARE LESS THAN THE FREQUENCY OF MAN-HOURS THAT OSHA DEFINES FOR SUCH A PLATFORM, PER OSHA'S 1984 INTERPRETATION OF THEIR REGULATIONS. THIS OPTION AND OTHERS ARE AVAILABLE FOR THOSE CUSTOMERS WHO PREFER THE EXTRA DEGREE OF PROTECTION IT PROVIDES.
2. NORMAL TOWER MAINTENANCE DOES NOT REQUIRE PERSONNEL TO BE ON TOP OF THE TOWER. IF ACCESS TO TOP OF THE TOWER IS NEEDED, THEN LADDER AND HANDRAIL OPTION IS RECOMMENDED.
3. LADDER IS ALL ALUMINUM CONSTRUCTION CONSISTING OF 3" [76] X 1 1/8" [29] I-BEAM SIDE RAILS AND 1 1/4" [32] DIAMETER SERRATED RUNGS.
4. TOWER IS MODIFIED FOR LADDER AND HANDRAIL WITH ALL ATTACHING CLIPS AND HARDWARE PROVIDED WITH THE COOLING TOWER. LADDER AND HANDRAIL ARE ASSEMBLED AND INSTALLED IN THE FIELD BY OTHERS. INSTALLATION DETAILS ARE SHIPPED WITH THE TOWER.
5. TOLERANCE APPLICABLE TO DIMENSIONS SHOWN ARE DEPENDENT UPON FABRICATION, ASSEMBLY AND CONSTRUCTION TOLERANCES. FABRICATION TOLERANCE IS ±1/16" [2] & ASSEMBLY TOLERANCE IS ±1/8" [3]. CONSULT SUPPLIERS OF SUPPORTING STRUCTURE FOR CONSTRUCTION TOLERANCE. ALL OF THE DIMENSIONS SHOWN ARE IN INCHES UNLESS OTHERWISE NOTED.
6. PER O.S.H.A. STANDARDS, SAFETY CAGE IS RECOMMENDED WHEN THE DIFFERENCE IN ELEVATION BETWEEN TOWER FAN DECK AND GRADE EXCEEDS 20' [6096].
7. LADDER EXTENSION IS PROVIDED IN A NOMINAL LENGTH OF 11' [3353]. FIELD MODIFICATION, BY OTHERS, IS REQUIRED FOR AN EXTENSIONS OF A DIFFERENT LENGTH. PER O.S.H.A. STANDARDS, AN ACCESS DOOR PLATFORM IS RECOMMENDED IF TOWER IS ELEVATED.
8. THE ACTUAL LADDER EXTENSION LENGTH (BASE OF TOWER TO GRADE) MUST BE SPECIFIED TO ASSURE THE PROPER BOTTOM ELEVATION OF SAFETY CAGE.
9. ALL DIMENSIONS SHOWN INSIDE OF BRACKETS[ ] ARE IN MILLIMETERS UNLESS OTHERWISE NOTED.

CONFIDENTIAL: The contents of this document are confidential and constitute the exclusive property of SPX Cooling Technologies. This document and its contents may not be made public in any manner, distributed or loaned to others, or reproduced or copied either in whole or part without the prior written consent of SPX Cooling Technologies.
© as of date(s) in title block SPX Cooling Technologies
Unpublished-All rights reserved under copyright laws.

DRAWN BY	DRAWN DATE	LADDER DETAILS WITH SAFETY CAGE				SPX COOLING TECHNOLOGIES	
QIAN_STD	12/12/2017						
CHECKED BY	CHECKED DATE						
Morby	01/15/2018						
RELEASED BY	RELEASED DATE	ECM NUMBER	ORDER NUMBER	FORMAT	PLOT	DRAWING NUMBER	REV.
Morby	01/15/2018	23298	-/-	ANSI A	1=30	Z0628293	A

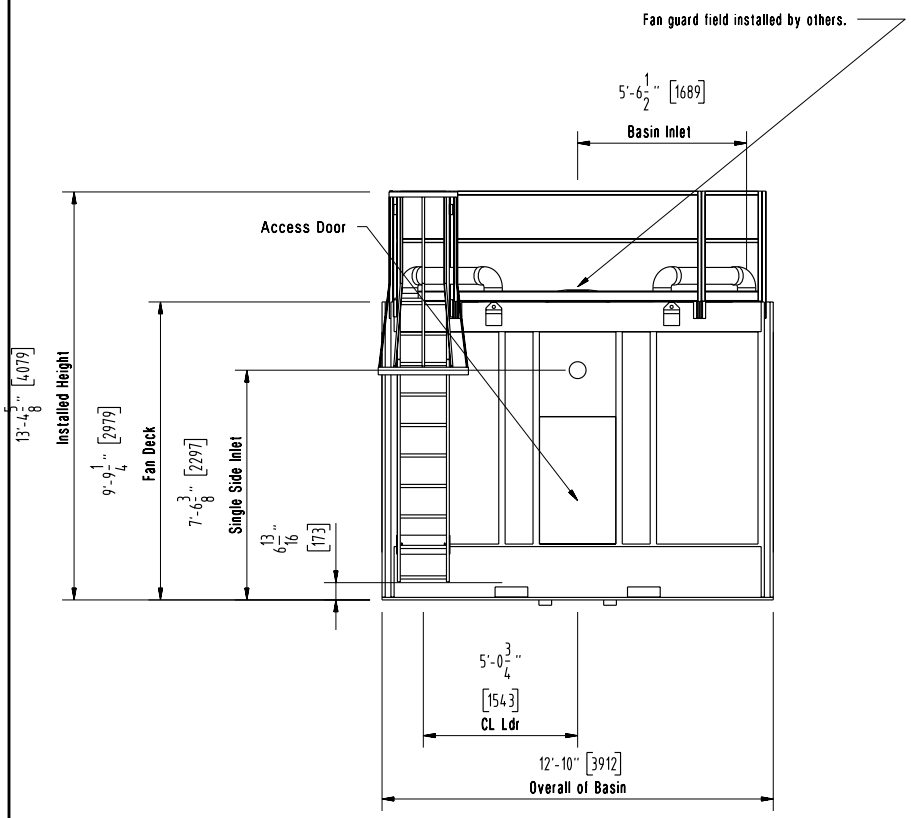

Cased Face C

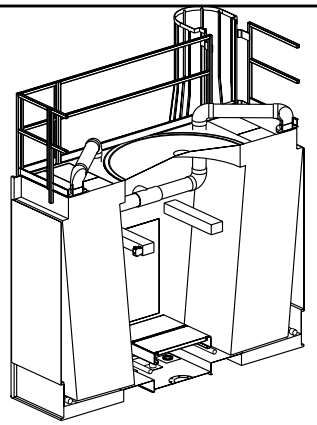

Interior View

NOTES

1. The fan motor must be locked out and inoperable before entering the tower. This warning has been placed on the access door.
2. The internal inlet piping, including flat face flange gaskets, which starts at the face of the inlet connection is provided by SPX CT. The piping external to the tower and its supports are provided by others. The external piping may not be supported from the tower.
3. The external inlet piping at the top of the tower is provided by SPX CT and installed in the field by others. This piping can be an obstacle to personnel on top of the tower. The installation detail drawings are included in the Literature Package shipped with the tower.
4. Multi-cell towers should include provisions to balance flow between cells.
5. An incoming riser and manifold must allow clearance for entry to the tower access doors. 4'-2" (1270 mm) is the minimum clearance needed to clear the optional access door or motor access platform.
6. To ensure maximum thermal performance the cooling tower must be installed level and plumb. Both of the air inlet faces must have adequate air supply. If obstructions exist, consult your SPX CT representative.
7. Contact your SPX CT sales engineer for the required pump head for this inlet arrangement.
8. Hoisting clips are provided for ease of unloading and positioning. For overhead lifts or where additional safety precautions are prudent, add slings beneath the tower. Adequate space has been provided for removal of the shackles and the 5 1/4" (133 mm) long pins from the hoist clips between the cells of a multi-cell tower. If the pin used is longer than 5 1/4" (133 mm), the cell may be slid into it's final position by using come-alongs at the base of the unit, after removal of shackle pins. See Hoisting Details drawing.
9. The manifold & ladder occupy the same space on NC Class 8301 towers. Therefore, the riser must be located opposite the ladder. A second ladder requires special arrangement of piping and/or ladder.
10. Flanged connections conform to Class 125 ANSI B16.1 specification. The bolt holes straddle the centerlines.
11. Construction of the ladder and guardrail: The guardrail is fabricated from galvanized structural tubing. Top rail, middle rail and posts are 1 1/2" (38 mm) square tube 1/8" (3 mm) thick. Toeboards are 12 gauge heavy mill galvanized steel. The ladder is aluminum 3" (76 mm) x 1 1/8" (29 mm) I-beam side rails and 1 1/4" (32 mm) serrated rungs.
12. The ladder and guardrail are field installed by others. The tower is shop modified to accept this option. The clips and hardware are provided by SPX CT for the field installation. The installation detail drawings are included in the literature package shipped with the tower.
13. The Plenum Walkway consists of 11 gauge steel supports and 16 gauge steel walkway panels. The elevation of the Plenum Walkway is above the overflow water level of the collection basin. The distance from the top of the Plenum Walkway to the fan is 7'-2 5/16" (2192 mm).
14. Single inlet options (side or bottom inlet) - This piping can be an obstacle to personnel on top of the tower.
15. The tower assembly tolerance applicable to all dimensions is + or - 1/8" (3 mm). Consult suppliers of supporting structure for construction tolerances.
16. The units of measure are in IP (SI) units unless otherwise noted.

NC8401MAN2SGF - Schematic Cased Elevation and Notes
PRIDCO side inlet
HATO REY, Puerto Rico

MARLEY

ORDER 0

DRAWN BY	CHECKED	REV BY	REV CHK	DATE	APPROVED	DRAWING NUMBER	REV.
ROSILMA VELEZ_250217_063505884 V1	QTC			02/17/25	SYS	RV917927M	

© AS OF DATE(S) IN TITLE BLOCK SPX COOLING TECH, LLC. UNPUBLISHED-ALL RIGHTS RESERVED UNDER COPYRIGHT LAWS.

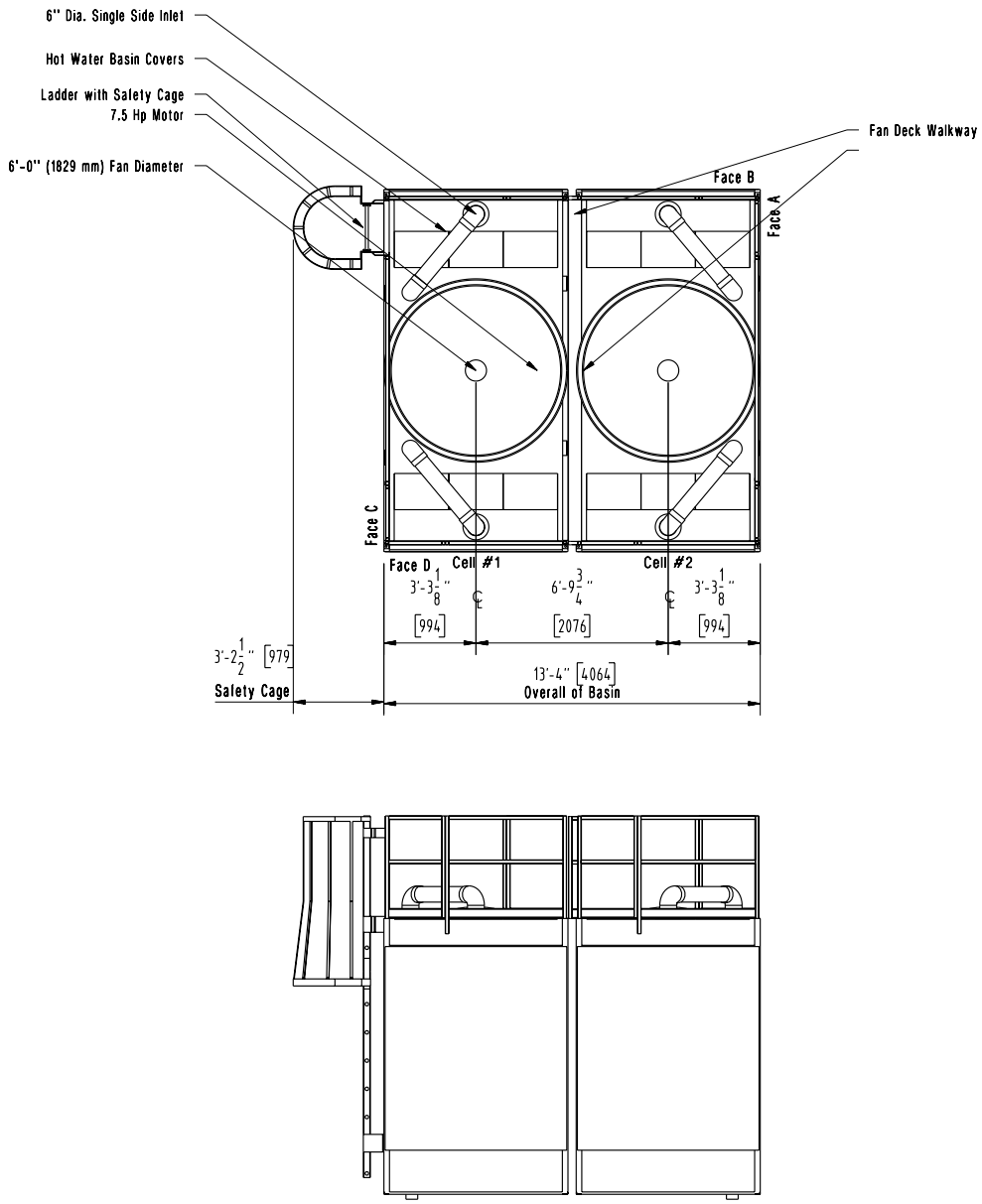

NOTES

1. The tower assembly tolerance applicable to all dimensions is + or - 1/8" (3 mm). Consult suppliers of supporting structure for construction tolerances.
2. The units of measure are in IP (SI) units unless otherwise noted.
3. See Schematic Cased Elevation and Notes drawing for additional notes.

NC8401MAN2SGF – Schematic Plan and Louver Elevation
PRIDCO side inlet
HATO REY, Puerto Rico

MARLEY

ORDER 0

DRAWN BY	CHECKED	REV BY	REV CHK	DATE	APPROVED	DRAWING NUMBER	REV.
ROSILMA VELEZ_250217_063505884 V1	QTC			02/17/25	SYS	RV917927S	

© AS OF DATE(S) IN TITLE BLOCK SPX COOLING TECH, LLC. UNPUBLISHED-ALL RIGHTS RESERVED UNDER COPYRIGHT LAWS.

TABLE OF CONTENTS

SECTION	TITLE	PAGES
260511	ELECTRICAL WORKS – GENERAL	11
260519	ELECTRICAL WIRES AND CABLES	5
260526	GROUNDING	5
260533.13	ELECTRICAL RACEWAY SYSTEM	8
260543	UNDERGROUND DISTRIBUTION SYSTEM	5
260800	FIELD ACCEPTANCE TEST	3
262416	PANELBOARDS	3
262726	WIRING DEVICES	6
265100	LIGHTING	3

SECTION 260511

ELECTRICAL WORK GENERAL

PART 1 GENERAL

1.01 DESCRIPTION

A. Install electric power, lighting and grounding systems, including the installation and wiring of miscellaneous instruments and devices.

B. Furnish temporary circuits, over current devices, conduit and wiring, and other equipment required during change-over from existing to proposed electric system.

1.02 QUALITY ASSURANCE

A. Install electrical work-n conformance with latest rules and requirements of National Fire Protection Association Standard No. 70 (National Electric Code) and with requirements of the Puerto Rico Electric Power Authority.

1.03 SUBMITTALS

A. Shop Drawings and Data: Include manufacturer's drawings, bills of material, panel and equipment layouts, catalog data, wiring diagrams and other documentary or descriptive information as required for each assembly submitted in one package insofar as possible.

1. Bills of material: Include a numbered list of all components, with manufacturer's name; catalog number, rating, and other identification. Place item number or similar identification on all other drawings where item appears.

2. Where additions and modifications are made to existing equipment, provide drawings which include both retained existing equipment and new work.

3. Mark shop drawings and data submitted showing only items applicable to specific contract.

4. Make early submission of certain drawings where dimensions of equipment, location of conduit, entrances, etc., are important to facilitate construction.

5. Include one-line diagrams, schematic diagrams and wiring diagrams. Submit only completed drawings showing all local and remote devices associated with each item. Submit one complete package of shop drawings as far as possible. Partial submittals may be returned with but action.

6. Submit list of type and make of conduit, fittings, wires, cables, switches, fixtures, receptacles, pushbuttons, sleeves and inserts, etc.

7. Submit for installation, operation and maintenance of equipment, and parts list. Specifically mark standard publications forming a part of this contract. Cross out, blank out, or otherwise delete any non-applicable items.

8. Install nameplates on all devices or pieces of equipment for which use or identification not readily apparent, such as, starters, relays, contactors, pushbuttons, indicating lights, and switches. Ensure position of nameplates readable after equipment installation.

9. Submit samples of wires and cables.

10. As soon as possible after award of contract, submit all information and data on wires, cables, and other non delivery items proposed. Early submission for review and early ordering are required to avoid delays in completion of work.

1.04 INTERFERENCE AND ERRONEOUS LOCATIONS

A. Locations of electrical equipment, devices, outlets and similar items, as indicated, are approximate only. Exact locations determined or accepted during construction.

B. Verify, in field, all data and final locations of work, done under other sections of specifications, required for placing of electrical work.

C. In case of interference with other work or erroneous location with respect to equipment or structures, furnish all labor and materials necessary to complete work.

1.05 APPROVAL AND MARKING EQUIPMENT

A. Insure, that devices and materials are listed and/or labeled by Underwriters Laboratories, Inc. wherever standards have been established by that agency.

Where Underwriters Laboratories listing is not available for equipment, submit certified test reports of adequately equipped, recognized, independent testing laboratory, approved by the local inspecting authority, indicating that equipment is in conformance with local code requirements or any other applicable requirements. In lieu of independent tests test reports, written approval of equipment by local electrical inspecting authority will be acceptable.

B. Clearly mark equipment, devices and material with name or trademark of manufacturer and rating in volts and amperes and other pertinent information on a nameplate.

1.06 ELECTRIC SERVICE

A. Earth and rock excavation, backfill, concrete masonry, concrete reinforcement, and construction joints required for electrical work: Conform to requirements specified under applicable sections of specifications.

1.07 POWER SYSTEM STUDY

A. Obtain from manufacturer of substation a complete system protection coordination study of electrical distribution system with curves of each protective device indicated on common drawing, to verify proper selectivity and protection for all parts of system obtained. Include all calculations, selected equipment and devices, and recommended settings.

1.08 INCOMING SERVICE

A. The power company will install connections to transformer primary.

B. Contractor to furnish and install transformer substation, primary cable and conduit, secondary cable and conduit, stress cones, concrete pads, etc.

C. Furnish and install all necessary conduit and wire to service pole, extend conduit up pole for distance of 10 feet, and leave sufficient length of conductors to reach power company's overhead conductors. Connections at pole made by the power company. Perform work at service pole in accordance with power company's requirements.

D. Perform work at transformer substation in accordance with power company's requirements and in manner approved by power company.

PART 2 PRODUCTS

2.01 EMERGENCY GENERATOR AND TRANSFER SWITCH

A. Description

1. Furnish generator set complete with a fuel (Diesel) tank, automatic transfer switch(es), battery, automatic battery charger, and all the required accessories for normal operation.

2. Unit shall include the following equipment and accessories:

a. Water cooled radiator.

b. One (1) above ground dual wall fuel (Diesel) tank of 5000 gallons capacity with all fuel supply, return and ventilation lines and equipment.

c. One 24 volts, heavy duty battery with rack and cables.

d. Exhaust critical type muffler with steel connections and fittings, including flexible section and rain cap for exhaust.

e. Vibration isolators of the size, number and type required by the plant manufacturer.

f. Screen, baffled, louvered air intake.

g. Ducted, baffled, louvered and screened hot air discharge.

h. Pumps and filters as required.

i. Relays and Contractors as required for remote control from transfer switch.

j. Instruments and control panel including following:

1) Voltmeter and selector switch.
2) Ammeter and selector switch.
3) Wattmeter and selector switch.
4) Frequency meter and selector switch.
5) Running time meter.
6) Field circuit breaker(s).
7) Voltage regulator with a two (2) position (off and automatic) switch.
8) Water temperature gauge.
9) Oil pressure gauge.
10) Automatic shutdown device with indicator lights for:

a) Over cranking protection
b) High water temperature
c) Low oil pressure

11) Start/stop switch
12) Remote start/stop terminals.

k. Automatic transfer switch(es). Rated for operation at 60 Hertz and shall be provided with the required pilot lights on the door and with the following accessories:

1) Selector switch with off-automatic check position
Time delay in transfer to emergency engine start, adjustable from 1/16 to 180 seconds
2) Time delay on restoration to normal power adjustable from 30 second and 10 minutes.
3) Clock exercise to star generator set automatically, it shall operate every week and run the generator set for one (1) hour and then, stop the generator set automatically.
4) All other accessories required for normal operation.
5) Time delay relays and contractors (if so required).

B. Remarks

1. All elbows shall be of the long radius type.

2. The diameter of the exhaust pipe must be increased 1" for each 10 feet of vertical run after the first 10 feet.

3. The Contractor shall leave the tank full of diesel, fuel of the type required for operation of the emergency generator.

4. The Contractor shall make sure that the connections at the diesel fuel tank are tight before proceeding with the final installation of the tank.

5. The Contractor shall be responsible for providing the complete installation of the emergency generator with all its necessary fittings and appurtenances. This shall be done according to the manufacturer's specifications and instructions.

6. The Contractor shall also be responsible for leaving the emergency power generating system in perfect operating conditions.

7. The structural details shown in the electrical drawings for the support of the diesel fuel tank are of a general nature. It corresponds to the Contractor to provide the correct type and size of structural according to the actual dimensions and characteristics of the tank purchase.

8. At end of the project leave the generator diesel tank full.

2.02 SUBSTATION

A. Description

1. Tamper-proof transclosure with padlock provision on all doors.

2. Formed by steel sections ganged together with the sections having formed edges to provide rigidity. The unit shall be fabricated from 12 gauge stainless steel sections or 11 gauge galvanized steel sections coated with heavy duty phenix. Require that Puerto Rico Electric Power Authority (P.R.E.P.A.) standards, all transclosure located within one mile from the coast be made of 12 gauge stainless steel.

3. Sheet metal edges shall be exposed to the weather at a minimum angle.

4. Primary and secondary removable doors shall be provided with separate locks.

5. Unit shall be free-standing and rigid when all doors are removed.

6. Effective ventilation openings shall meet the national electrical code (N.E.C.) regulations given in Section 450-45 (B) and (C).

7. Ventilation openings shall be covered with standard expandable wire mesh of a sufficient number and type of installation as to provide tamper-proof ventilation facilities of adequate capacity to cool the transformers and electrical equipment inside the transclosure.

8. Roof shall be designed in a 4-way pitch to provide good water drainage.

9. All rust scales, weld metals fluxs and / or weld splatters shall be removed from all surfaces prior to painting. The primer coat shall be A.R.C. which is a cold galvanized process. The finish paint shall be P.R.E.P.A. standard gray.

10. A minimum of 6 grounding lugs shall be provided #4/0-AWG bare copper cable shall be used to ground all metal frames. in lieu of grounding lugs a continuous copper ground bus of adequate capacity can also be used in order to ground all metal frames as per N.E.C. and P.R.E.P.A. standards.

11. Transclosure shall be P.R.E.P.A. approved type suitable for outdoor installation. This also applies to the equipment inside the transclosure.

12. Transclosure shall be provided with glasstick safety barriers in all doors and access to live parts as per P.R.E.P.A. requirements. The glasstick barriers shall be so installed as to provide clear view of all the equipment components inside the cubicle.

B. Remarks

1. Transclosure dimensions shall be those approved by PREPA due to the code required clearances.

2. Contractor is responsible for verifying with PREPA the availability of the metering equipment to be installed in this project.

3. Contractor is responsible for anchoring the transclosure to the concrete base in an approved manner.

2.03 METERING EQUIPMENT

A. Obtain from power company drilling templates, dimensions, and mounting arrangements for metering transformers.

B. Ensure that metering equipment installation is in accordance with requirements of power company by submitting drawings, sketches, catalog information and other appropriate material for power company approval.

2.04 CONDUCTORS

A. Unless otherwise indicated all conductors shall be copper.

B. All building conductors shall be THWN/THHN-600V. Insulation

C. Up to #10-AWG use solid conductors, all larger sizes shall be stranded conductors.

D. Conductors Sizing

All conductors shall be #12-AWG except when otherwise indicated in the drawings or as indicated below for 20 AMPS switch conductors sizing.

All 20 AMPS, 120 volts circuit runs shall be as follows for the indicated length of circuit run:

Length of Circuit Runs	***Conductors Size***
Up to 100'	#12 - AWG
From 101' up to 200'	#10 - AWG
From 201' up to 300'	#8 - AWG
From 301' up to 400'	#6 - AWG

All 20 AMPS, 277 volts circuit runs shall be as follows for the indicated length of circuit run:

Length of Circuit Runs	***Conductors Size***
Up to 200'	#12 - AWG
From 201' up to 350'	#10 - AWG
From 350' up to 500'	#8 - AWG

E. Provide a ground conductors in all the conduits.

F. Provide a #12-AWG green jumper between the receptacle grounding screw and the cutlet box grounding screw.

G. Provide a #12-AWG THHN/THWN first wire in all empty conduits.

2.05 CONDUITS

A. Unless otherwise indicated all conduits shall be 3/4" in diameter minimum.

B. Unless otherwise indicated in the drawings the following conduit work shall apply:

1. All conduits installed underground shall be PVC SCH. 40.

2. All conduits installed embedded in floor slabs which are in direct contact with the earth, shall be PVC SCH. 40.

3. All conduits installed embedded in walls, ceiling slabs and in floor slabs which are not in direct contact with the earth shall be EMT.

4. All conduits installed in the area between hung ceilings and ceiling slabs or metal decks shall be EMT.

5. All conduits installed exposed in indoor areas shall be EMT.

6. All conduits installed exposed in outdoor areas shall be PVC COATED HEAVY WALL RIGID GALV. STEEL.

7. Final connections to all motors and electrical equipment shall be done with liquidtight flexible steel conduit.

C. All underground conduit couplings shall be watertight.

D. Provide an expansion joint coupling of the required type and size whenever a conduit crosses an expansion joint.

E. Provide plastic conduit dividers in all underground conduits runs. Maximum distance between dividers to be 4'-0".

2.06 WIRING DEVICES

A. Unless otherwise indicated, all wiring devices shall be white colored with 302 stainless steel cover plates, except the weatherproof of outlets which shall have their standard gray cover plates.

B. When two or more wiring devices are shown together in adjacent positions and at the same height, they shall be installed in a multiple gang outlet box of the proper size so that only one raised cover plate of the required type and size are used. 120V and 277V outlets must be installed on separate boxes.

C. All dimmers shall be of the slide type.

D. All wiring devices to be specification grade.

2.07 PANELBOARDS

A. All panelboards and load centers shall be provided with a factory installed ground bus for connecting to ground all the ground wires or cables entering or leaving the panelboard. The ground bus shall be similar in size and characteristics to the neutral bus. All panelboard shall have a monoflat front and key lock.

B. When two or more panelbaords or cabinets are shown together in adjacent locations, the top of all panelboards or cabinets shall be aligned with the top of the biggest one so that all the tops are at exactly the same height from the finished floor.

C. Contractor must make sure that the entire electrical system has ground continuity.

2.08 TELEPHONE CABINETS

A. Telephone terminals cabinet shall be approved equal to Columbia metal, type "PF" with the door hinges, lock and 3/4" plywood backboard cover at the bottom of the cabinet.

PART 3 EXECUTION

3.01 GENERAL

A. All the electrical installation shall be done in a neat and workmanlike manner, according to the last edition of the national electrical code, the Puerto Rico Electric Power Authority latest standard and the Puerto Rico Telephone Company latest practices.

B. The Contractor shall visit the job site and become acquainted with the existing field. conditions. It shall be the direct responsibility of the Contractor to bring promptly to the attention of the engineer any discrepancies between the existing field conditions and those that were used for design purposes. This shall be done before the Contractor submits his bid, so that the engineer can render a decision on the matter before the bids are received. The submittal of the bid by the Contractor will be held as proof that the Contractor understand thoroughly and completely the Scope of Work involved, has familiarized himself with the existing field conditions, and has included in his bid all the items necessary to perform the electrical work. No allowance will be permitted on this matter after the bids are received.

C. Unless otherwise indicated all outlets shall be flush mounted and shall have their own independent outlet boxes. Minimum size of outlet box to be 4" square and 1 1/2" deep. Exact size of outlet box shall be determined according to the maximum number of conductors in the box per N.E.C. Article 70-Section 6.

D. All indicated heights are from center of box to finished floor.

E. Contractor shall balance all loads.

F. Route of conduits shown in the layout is schematic and intended only to indicate interconnections between outlets. Exact conduit routing shall be determined at the jog site to conform with the structural conditions and shall be subject to the final approval of the architect/engineer.

G. In conduit runs, the numbers of arrows designate the number of circuits in the conduit (one pole in the panelboard per each circuit). The number of lines designate the number of conductors in the conduit, the longer line being a neutral conductor and "1" being the ground conductor.

H. CI in lighting outlet, C1 indicates the circuit number, L1 indicates the luminary L1____ type from the luminary schedule and 1 indicates the switch controlling unit. C3____ in receptacle outlet, C3 indicates the circuit number.

I. It shall be the responsibility of the Contractor to verify the voltage characteristics as the site with the utility company at the time of installation before ordering any primary equipment.

J. All the self-standing and surface mounted electrical equipment as well as the luminaries shall all be braced for seismic shock according to the seismic restraint manual guidelines for mechanical systems. The same applies to all the conduit work. The details and installation methods in said manual shall be modified as required to fit the electrical installation of the project.,

K. For final location of mechanical and medical equipment see corresponding mechanical and architectural drawings. Contractor to relocate electrical rough-in accordingly at no additional cost to Owner.

L. All pedant mounted luminaries shall be installed using stems, 2 stems per each 4' luminary. Stems shall be painted of the color required by the Architect.

M. Normal power and emergency power switch must be installed in separate conduit runs.

3.02 REMOVAL AND RELOCATION OF MATERIAL AND EQUIPMENT

A. Carefully dismantle and salvage electrical equipment, switches, fixtures, conduits, cables, wiring, etc. as necessary to carry out proposed changes. Rehabilitate and relocate items of equipment as required and as indicated or specified.

B. Deliver material and equipment not indicated for reuse to Owner for his disposal.

3.03 PROTECTION OF ELECTRICAL EQUIPMENT

Protect electrical equipment from the weather, especially from water dripping or splashing upon it, at all times during shipment, storage; and construction. Do not store equipment outdoors. Where equipment is installed or stored in moist areas, such as unheated buildings, etc., provide acceptable means to prevent moisture damage, such as uniformly distributed source of heat to prevent condensation. Protective means, as acceptable by Engineer.

3.04 DEFECTIVE OF DAMAGED EQUIPMENT

Thoroughly dry out equipment or material subjected to possible water damage, and put through special dielectric test as directed, without additional compensation.

END OF SECTION 260511

SECTION 260519

ELECTRIC CONDUCTORS

PART 1 GENERAL

1.01 DESCRIPTION

A. Furnish and install all (conductors wires and cables) necessary for complete electrical systems, as indicated and specified.

1.02 REFERENCE STANDARDS

A. NEC: National Electrical Code: National Fire Protection Association, 470 Atlantic Avenue, Boston, MA.

B. U.U. Underwriters Laboratories, Inc., 333 Pfingston Road, Northbook, IL

1. U.L. 44 - Wires and Cables Rubber Insulated

2. U.L. 83 - Wires Thermoplastic Insulated

3. U.L. 854 - Cables, Service Entrance

C. NEMA: National Electrical Mfg's Association, 2101 L Street, N.W. Washington, DC 20037

1. WC 3 - Rubber Insulated Wire & Cable

2. WC 5 - Thermoplastic Insulated Wire & Cable

3. WC 7 - Cross Linked Thermosetting Polyethylene - Insulated Wire & Cable
4. WC 8 - Ethylene-Propylene Rubber Insulated Wire & Cable
5. WC 30 - Color Coding of Wires & Cable

1.03 SUBMITTALS

A. Shop drawings and manufacturer's product data in accordance with requirements of Section 01000.

B. Two samples of each type of wire. Samples of necessary length with manufacturer's name and number or type, voltage rating, conductor size, and insulation type on each conductor sample. Color code all control, indicating and metering wiring, and lighting branch-circuit wiring.

1.04 MANUFACTURER'S COMPLIANCE

A. Contingent upon products' compliance with specifications.

B. 15 KV CABLE

1. General Electric Company, 1260 Boston Avenue, Bridgeport, CT - Type

2. Rome Cable Division of Alcoa, 1501 Alcoa Building, Pittsburgh, PA - Type XLP

3. Triangle Conduit and Cable Company, Inc., PO Box 711, New Brunswick, NJ - Everene Cable

4. The Anaconda Company, Wire and Cable Division, Greenwich, CT

C. 600V, 480V, 380V, 220V, 208V, 200V, 120V, 115V cable:

1. General Electric Company

2. Rome Cable Division

3. The Rockbestos Company, 550 Nicoll Street, New Haven, CT

D. Control ad metering wire:

1. The Rockbestos Wire and Cable Company, single and multiconductor, 600V control cable.

2. General Electric Company - Vulkene control cable, Type SI.

3. Rome Cable Company - control cable, 600V, Type B, Size 12, 7 strand.

E. Cable fireproofing tape:

1. MAC Products, Inc., 60 Pennsylvania Avenue,
Kearny, NJ

2. Acceptable Equivalent.

PART 2 PRODUCTS

2.01 MATERIALS

A. Furnish copper conductors. Material and stranding of conductors: Conform to ASTM B 33-80 ASTM B3-80, and to ASTM B 8-77, for the appropriate class. No. 12 Awg minimum wire size unless otherwise noted.

B. Tinned wire used with natural rubber insulation: Conforms to ASTM B 33. Uncoated, soft or annealed copper wire conforming to ASTM B3-80.

C. 15 KV/5 KV Cables: Single-conductor, shielded, grounded cross-linked polyethylene insulated, 90 degrees C., copper conductors. The outer jacket: polyvinylchloride.

D. Wires and cables for maximum 600 volt power circuits: Type XHHW rated RHW with cross-linked polyethylene insulation, Type RHW-75C with rubber or rubberlike insulation and neoprene jacket or ethylene propylene rubber EPR.

E. Wires and Cables for lighting and other 120/240 volt and 120/208 volt circuits: Type THW-75C.

F. Wires and Cables for control, indicating, metering, or alarm circuits: single and multi-conductor control cable, copper conductors, Class B or C stranding. Insulation, 600 volt polyethylene, polyvinylchloride, or E.P.R.

G. Shielded cable for instrumentation wiring: 19 strand copper conductors, size no. 16 AWG. Insulate conductors individually with color coded polyethylene or polyvinylchloride. Twist pairs twisted with varying lay (if more than one pair) and cover with cable tape and copper or aluminum coated mylar shielding tape and tinned copper drain wire. Jacket: polyvinylchloride. Cables: rated 600 volts and 90 degrees C.

PART 3 EXECUTION

3.01 GENERAL INSTALLATION

A. Install wiring in accordance with applicable provisions of National Electrical Code, and as indicated.

B. Wire and cable sizes are indicated however, in no case use smaller cable sizes than required by the National Electrical Code.

C. Unless otherwise indicated, use no conductor smaller than No. 12 AWG.

D. Conductors for branch lighting circuits: Install conductors of sizes that greatest voltage drop between lighting panel and center of load will not exceed 3 percent at rated load.

E. Number and sizes of wires and conduits indicated are guide only and are not necessarily correct numbers and sizes necessary for actual equipment installed. Install as many wires and conduits as required and necessary for complete electrical system, and provide adequately for the equipment actually installed.

F. Install conductors continuous from outlet to outlet and make no splices except within outlet or junction boxes.

G. Draw all conductors contained within single conduit at same time.

H. Apply wire pulling compound if required to conductors being drawn through conduits. Use pulling compound, Minerallac No. 100, Y-er-Eas, Yellow 77 or acceptable equivalent.

I. Use no cable bend with radius of less than eight times its diameter.

J. Wires and cables installed without prior submittal review and approval are subject to removal at no additional expense to owner.

K. Support cables in rise conducts at intervals as required by National Electrical Code.

3.02 15 KV AND 5 KV CABLE SPLICING AND TERMINATIONS

A. Use primary 15KV/5KV cable terminations with rating of 15,000 volts/5,000 volt. Ensure that standard withstand conforms to IEEE Std. 48 and is in compliance with specification Section 16999, Field Acceptance Tests. Use potheads, elbow connectors, clamp type connectors or termination as recommended by equipment manufacturer.

B. Ensure that all splicing and terminating of 15 KV and 5 KV cable is in accordance with designs, materials, and instructions set forth by cable manufacturer.

C. Wrap cables in manholes with fireproof tape which meets ASTM D626. Install tape in accordance with manufacturer's instructions.

3.03 CONDUCTOR IDENTIFICATION

A. Lable each wire at both termination points. Carry individual conductor or circuit identification throughout, with circuit numbers or other identification clearly stamped on terminal boards and printed on directory cards in distribution cabinets and panelboards.

B. Identify each wire in junction boxes, cabinets, and terminal boxes where total number of control, indicating, and metering wires is three or more and no terminal boards is provided, including all power wire by means of plastic-coated, self-adhesive, wire marker.

C. In cases similar to above where terminal boards are provided for the control, indicating, and metering wires, identify all wires including motor leads and other power wires too large for connection to terminal boards, by wire markers as specified above.

D. In manholes, identify each wire by laminated plastic tag located so easily seen.

3.04 CONNECTORS, TERMINAL LUGS AND BOARDS

A. For wiring of circuits consisting of No. 10 or No. 12 AWG solid wires, such as for lighting branch circuits, utilize self-insulated pressure type connectors for all splices or joints.

B. Terminate all wires connected to terminal boards, terminal blocks, or to other similar terminals by means of ring and tongue, nylon self-insulated, tin-plated copper pressure terminals.

C. Fabricated terminal boards, installed where indicated, of type 600 volts, 30 amperes, screw terminals, with white marking strips for wire identification, of the 4-, 6-, 8-12 pole type, as necessary.

D. Clearly and permanently mark terminal strips with ink or indelible pencil. Mark each wire consistently throughout entire system, using notation of wires given on manufacturer's wiring diagrams wherever possible.

END OF SECTION 260519

SECTION 26 05 26

GROUNDING

PART 1 GENERAL

1.01 DESCRIPTION

A. Furnish and install a single, complete, integrated grounding system, including all conductors, raceways, and connections, specified and indicated.

B. Include grounding of switchgear, substations, motor control centers, electric equipment enclosures, etc., outdoor substations, transformers, switch structures, etc.; ground grid systems with ground rod and water pipe connections; structural steel, and lightning protection system.

C. Include grounding conductors completely interconnecting water supply pipe, ground rods, ground grid, substation, switchgear and motor control center ground buses, other distribution equipment, and other groundable equipment.

1.02 REQUIREMENTS OF REGULATORY AGENCIES

A. Install complete grounding system in accordance with codes, and standards.

1.03 REFERENCE STANDARDS

A. American National Standards Institute:

1. ANSI C2.-1978 National Electrical Safety Code

B. National Fire Protection Association, 470 Atlantic Avenue, Boston, MA:

1. NFPA 70-1981 National Electric Code

2. NFPA 78-1975 Lightning Protection Code

1.04 TESTS

A. Measure ground grid resistance with earth test megohmeter and install additional ground rods and conductors as required until resistance to interconnected ground system is 5 ohms or less. Measure ground resistance in normally dry conditions and not less than 48 hours after rainfall.

PART 2 PRODUCTS

2.01 MANUFACTURERS ACCEPTABLE

A. Contingent upon products' compliance with the specifications.

B. Ground rods - Copperweld Corporation, 2 Oliver Plaza, Pittsburgh, PA.

2.02 CONDUCTORS

A. Furnish soft drawn stranded copper grounding conductors. Minimum size of unenclosed grounding conductor shall be No. 6 Awg. All conductors shall be protected if physical damage would result from exposure.

B. Furnish bare conductors where buried in earth or where embedded in concrete.

C. In buildings run insulated grounding conductors with green insulation only.

D. Furnish insulated grounding conductors with insulation rated at 600 volts.

E. Furnish grounding conductors for installation in all non-metallic raceway in addition to, and not to be considered as, the neutral wire of the system.

F. Connect a grounding conductor between panelboard and grounding system. Where a grounding bar is furnished with panelboard, connect grounding conductor to bar.

2.03 GROUND BUS

A. Furnish a 2-in. by 1/4-in. copper bar complete with bolted type connectors as indicated. Connect grounding conductors from equipment in area to this ground bus. Connect ground bus to grounding system. Mount ground bus on 600-V. pedestal insulators:

2.04 CONNECTIONS

A. Make all buried and concealed ground connections by exothermic welding.

B. Make accessible connections to structural members by exothermic welding process or by bolted connector. Connections to equipment or ground bus by acceptable bolted connectors. Furnish bolted ground connectors suitable for, and matching, grounding provisions furnished.

C. Furnish copper, brass, or silicon bronze ground lamps for use on copper or bass pipes.

D. Furnish ground clamps, for use on iron pipes, of galvanized or malleable iron, or of standard noncorrosive material.

E. Furnish ground clamps for use on pipes, with rigid metal base providing good contact by proper seating on the pipe. Do not use strap type clamps.

F. Design cable to ground rod connectors capable of being installed without having to pass over end of ground rod.

G. Where conduits are not effectively grounded by firm contact with a grounded enclosure, apply grounding bushings on at least one end of conduit run.

H. Furnish copper-clad steel or galvanized steel ground rods; type, diameter and length as indicated on drawings.

PART 3 EXECUTION

3.01 INSTALLATION OF GROUNDING CONDUCTORS

A. Install grounding conductors so not exposed to physical damage. Install connections firm and tight. Arrange conductors and connectors so no strain on connections.

B. Run grounding conductors associated with direct burial cables in common trenches above or if indicated beside cables.

C. Bury equipment grounding conductors 18-in. deep. Bring loops or taps up for connection to equipment or other items to be grounded.

D. Where raceways are used to contain and protect grounding conductors, install in accordance with Electrical Raceway Systems Section.

E. Where bare grounding conductors are contained within metallic raceways, bond ends of raceways to conductors by suitable fittings.

F. Install loop type, low impedance, grounding system interconnecting all components so at least two grounding connections are provided for each major item of electrical equipment. Ensure that severing of any single grounding conductor in this system does not remove grounding protection on any major item.

G. Connect structural steel at locations indicated by an external perimeter loop of grounding conductor installed around all sides of building foundation, buried at least 18-in. (450 mm) below grade, and connect to each vertical column by loop or tap. Connect two opposite points on external loop to two different points on grounding system.

H. Perform exothermic welding with properly sized molds in good condition.

3.02 INSTALLATION OF GROUND RODS

A. Install ground rods in manholes in accordance with requirements specified under the Section Underground Distribution Systems. Connect each grounding conductor entering a manhole to ground rod.

B. Install ground rods where indicated. Install the top of the rod 12-in. below the ground surface. Measure ground resistance of electric power service ground rod and if it is not 25 ohms or less, drive additional rods to obtain resistance of 25 ohms or less.

C. Make connection to overall grounding system as indicated.

D. Ensure that final resistance of interconnected ground system is 5 ohms, or less. Measure ground resistance in normally dry conditions, and not less than 48 hours after rainfall.

3.03 EQUIPMENT GROUNDING

A. Ground each piece of electrical equipment by means of a grounding conductor installed in raceway feeding that piece of equipment with copper wire sized in accordance with National Electric Code. Grounding conductors installed in conduit furnished with green, 600-volt insulation.

B. Connect transformer cases and neutrals to grounding system. Connect neutral ground connection at transformer terminal. Provide two separate, independent, diagonally opposite, connections for power transformers so removal of one connection will not impair continuity of other.

C. Connect two separate ground connections from ground grid to ground bus of switchgear assemblies, motor control center and all outdoor substation equipment. Ensure that each connection for item of equipment is from different section of ground grid.

D. Install a separate grounding conductor from ground system to motors of 100 hp. and larger, in addition to raceway system. Ground motor ground connection to motor frame, independent of mounting bolts or sliding base. Ground motor to nearest point on grounding system unless otherwise indicated.

E. Connect lightning arresters to ground system by suitable conductors.

F. Connect emergency generator neutral to grounding system by a grounding conductor of size required by National Electrical Code, unless a larger size is indicated. Connect grounding conductor to generator disconnect enclosure and generator neutral on generator side of disconnect. Ground generator frame with two separate independent connections, so removal of one connection will not impair continuity of other.

G. Ground each street lighting standard by ground rod driven near base of standard, in accordance with requirements of National Electric Safety Code. Connect ground rods to grounding conductor brought with street lighting feeder cable.

H. Ground transformers, lightning arresters, insulators etc., installed on poles, poles and timber structures on metal structure. Run grounding conductors between poles or structure and ground rods. Protect grounding conductor by molding applied for at least 8 ft. above ground, with both molding and conductor stapled. Install ground rod where indicated, and driven until top of rod is 1 ft. below ground. Measure ground resistance of rod and if not 25 ohms or less, drive additional rods to obtain resistance of 25 ohms or less.

I. Ground wire fences when used to enclose electrical equipment. Unless otherwise indicated, provide minimal grounding by buried outside peripheral ground loop; connections to each corner fence post and nearby ground rod; flexible connections to

each gate; and at least two connections to grounding system from approximately opposite positions on fence.

J. Also connect the ground rods to the grounding conductor run with the direct burial cable.

3.04 COMMERCIAL GROUNDING

A. Telephone:

1. Install one No. 2 insulated ground conductor to ground bus in telephone equipment cabinet.

2. Connect one No.12 insulated ground conductor to all 68 conduits terminating at backboard.

END OF SECTION 26 05 26

SECTION 26 05 33.13

ELECTRICAL RACEWAY SYSTEMS

PART 1 GENERAL

1.01 DESCRIPTION

A. Furnish and install complete raceway systems, with all accessories, fittings, boxes, etc., as indicated and specified.

B. All raceway runs are shown diagrammatically to outline general routing of raceway. Avoid interfering with pipes, ducts, structural members, or other equipment. Deviations in accordance with Engineer, after acceptance, and without additional compensation.

1.02 REFERENCE STANDARDS

A. NEC: National Electrical Code: National Fire Protection Association, 470 Atlantic Avenue, Boston, MA.

B. UL: Underwriters' Laboratories, Inc., 333 Pfingsten Road, Northbrook, IL 60062, USA.

C. ANSI: American National Standards Institute, Inc., 1430 Broadway, NY , N.Y. 10018 USA.

D. NEMA: National Electrical Manufacturers Association, 2102 L Street, Northwest, Washington, D.C.

1.03 SUBMITTALS

A. Submit shop drawings and manufacturer's product data in accordance with requirements of General Specifications.

PART 2 PRODUCTS

2.01 MANUFACTURER'S COMPLIANCE

A. Manufacturers acceptance contingent upon products' compliance with specifications.

B. Rigid Metal Conduit:

1. Triangle Conduit & Cable Company, 6900 Jersey Ave., New Brunswick, NJ 08903, USA.

2. Republic Steel Corporation. 144: 1-T Republic Building, Cleveland, OH 44101, USA.

3. Robroy Industries, River Road, Verona, PA 15147, USA.

C. Polyvinylchloride (PVC) Conduit:

1. Triangle Conduit & Cable Company, New Brunswick, NJ, USA.

2. Republic Steel Corporation, Cleveland, OH, U.S.A.

3. Carlon Inc., Cleveland, OH USA.

D. Flexible Conduit:

1. American Flexible Conduit Company, P.O. Box A -2094, New Bedford, MA 02741, USA.

2. Anaconda Metal Hose, Brass Division, 700 South Main Street, Waterbury, CT 06723, USA.

3. International Metal Hose Company, Goodrich Road & Sullivan Avenue, Bellevue, OH 44811, USA.

2.01 MATERIALS AND COMPONENTS

A. Rigid Metal Conduit:

1. Furnish galvanized rigid metal conduit with a coupling on one end and thread protector on other.

2. Hot-dip galvanize rigid steel conduit over entire length, including threads. Conduit conforming to ANSI Standard C80.1-1966.

B. Flexible-Metal Conduit:

1. Match flexible-metal conduit, fittings, size, and material to rigid conduit to which it is connected, unless otherwise indicated.

2. Liquid-tight flexible-metal conduit consists of flexible, corrosion-resistant metal conduit, with watertight synthetic jacket extruded over the conduit and a continuous copper ground under the jacket. Where ground is not included as in sizes greater than 1-1/4". IPS furnish separate external ground wire. Liquid-tight flexible-metal conduit conforming to UL Standard 360.

C. Polyvinylchloride (PVC) Conduit:

1. Furnish PVC conduit, EPC-40-PVC, for direct burial or exposed in extra severe conditions conforming to industry NEMA Standard TC 2-1975 and UL listed for indicated application.

2. Furnish PVC conduit, EPC-40-PVC, for normal exposed conditions in ductwork, or for use in all corrosive atmospheres specifically chlorine, conforming to industry NEMA Standard TC 2-1975 and UL listed for the indicated application.

D. Polyvinylchloride-Coated Rigid Steel Conduit:

1. Polyvinylchloride-coated (PVC-coated), rigid steel conduit shall be hot-dipped galvanized rigid steel conduit, as specified hereinbefore, with a polyvinylchloride jacket not less than 40 mils thick, bonded to the conduit. The adhesive strength of the bonding shall be equal to or greater than the tensile strength of the coating. Couplings and fittings for this conduit shall include an integral, bonded overlapping pressure-sealing sleeve of the same insulation thickness. The sleeves shall extend one pipe-diameter or 2" (whichever is less) beyond the end of the coupling. When coupled together, the sleeve of the coupling shall make a watertight fit with the plastic jacket on the conduit.

E. Boxes:

1. Furnish standard, sheet-metal, outlet and junction boxes constructed of code-gauge" galvanized sheet steel. Size each box as required by the NEC.

2. Furnish boxes containing fixture studs for hanging fixtures. Furnish concrete-tight boxes for installation in concrete. Do not use shallow boxes unless building construction is such that it is impossible to use standard-depth boxes.

3. Outlet boxes and fittings for hazardous locations conforming to ANSI-Standard C33.27 for class, group, and division indicated.

4. All cast-iron boxes shall be manufactured by O.Z. Electrical MFG. Co., Brooklyn, NY; Appleton Electric Co., Chicago, IL; Crouse-Hinds Co., Syracuse, NY; or be an acceptable equivalent product.

5. All cast-aluminum boxes shall be manufactured by Crouse-Hinds Co., Syracuse, NY; Killark Electric Manufacturing Co., St. Louis, MO; Adalet MFG. Co., Cleveland, OH; or be an acceptable equivalent product.

6. Boxes and covers for use with polyvinylchloride coated steel conduit shall be galvanized cast boxes as above, with a polyvinylchloride factory-applied coating over the galvanizing. The coating shall have a 40-mil thickness and the boxes shall have hubs with extruded sleeves extending beyond the hub in the same manner as specified for conduit couplings. Cover screws shall be stainless steel.

7. Cast boxes shall be provided with cast covers and watertight gaskets. Cover screws shall be stainless steel or high brass for iron boxes, and stainless steel for aluminum boxes.

8. Polyvinylchloride boxes shall be used with polyvinylchloride conduit. The size of each box shall not be less than that which is required by the National Electrical Code. Boxes shall be manufactured by Carlon, Cleveland, OH; Crouse-Hinds Co., Syracuse, NY; Raco, Inc., South Bend, IN; or be an acceptable equivalent product.

9. Pull boxes used below motor control centers shall be constructed of angle or channel frames, and sheet metal with weld joints. All welds shall be ground smooth. Neoprene gaskets shall be provided for complete sealing. Covers longer than 40" shall be sectionalized to facilitate handling. Sectionalized covers shall be gasketed where covers meet, using angle iron or channel cross, members at the joint. Sheet metal shall be not less than No.12 gage galvanized sheet steel. Interior angles and supports shall be made of galvanized steel, or shall have a corrosion-resistant phosphate coating and primer. Each box shall be provided with a grounding lug for connection to the nearest ground bus. The ground lug shall have the current capacity required by the National Electrical Code for the largest feeder entering the equipment.

F. Fittings:

1. Furnish cast-iron fittings of malleable iron or a mixture of gray iron and cast steel. Conduit fittings shall conform to ANSI Standard C80.4.

2. Supply fittings for electrical metallic tubing with UL Label. Do not use "sock" or "drive-on" fittings. Use fittings of set screw, compression, or permanent indentation types, which are galvanized and made of steel or malleable iron. Where indicated, use fittings which are watertight, with a sealing compression ring.

3. Furnish suitable expansion fittings where conduits cross expansion joints. Equip these fittings with grounding straps, clamps, and copper bonding jumpers.

4. Terminate ends of all floor conduits installed for future use with couplings and readily removable plugs set flush with finished floor surface. Cap spare wall conduits at wall where they enter building.

5. Equip ends of all conduits with suitable conduit fittings. Fit conduit terminating at motor control center or power distribution equipment, or in box above or below, with grounding type bushings, or solidly ground by locknuts or other acceptable fittings. Connect each grounding bushing to ground bus by a bare or green-covered copper wire. Do not use ground wire or smaller than 12 awg. Install sizes larger than 12 gauge as required by NEC. Where conduits terminate in unprotected areas or where bonding is required over expansion joint, flexible conduit or equivalent; ground wire smaller than No. 6 Awg. copper.

6. Terminate conduits entering gasketed sheet-metal boxes or gasketed sheet-metal equipment enclosures with gasketed hubs.

7. Terminate conduits entering non-gasketed sheet-metal boxes or enclosures with double locknuts and insulated bushings, or with acceptable equivalent.

PART 3 EXECUTION

3.01 INSTALLATION OF FITTINGS

A. Install expansion fittings wherever conduits cross structural expansion joints. Keep the fittings in line with conduit, and install with regard to temperature so that full working range of expansion is available.

B. Do not install fittings to replace elbows and pull boxes, unless space or other problems make use of fittings necessary. Use oversize fittings whenever large cable is installed, in order to maintain proper bending radius.

3.02 INSTALLATION OF RACEWAYS

A. Install exposed raceways parallel or at right angles to walls and ceiling beams Make all changes in directions as far as possible, with approved bends, elbows, and pull boxes. Space parallel runs uniformly throughout. Secure in place by approved hangers and approved fasteners. Effectively ground by connection to properly grounded enclosures, bonding, or other approved means, to obtain permanent low resistance path to ground throughout installation. Ensure that raceway sections in single run and in parallel runs are of same type and finish.

B. Support raceways concealed above suspended ceilings from slab above ceiling in same manner as exposed raceways. Do not support raceways from ceiling supports.

C. Use cast-in-place inserts in concrete to support-all runs, unless otherwise permitted. Use stainless steel sleeve type concrete anchors for installing boxes, conduit supports, etc. Furnish stainless steel nut, bolts, washers, etc. used with concrete-anchors.

D. Use bolts or machine screws on steel work. Support conduits by hangers or pipe straps spaced according to NEC, but in no case more than 10 feet on centers.

E. Use galvanized supports for galvanized conduit.

F. Install conduits in slabs as close to middle of concrete slabs as practicable without disturbing reinforcement. Do not use conduit with outside diameter exceeding one- third of slab thickness. Do not place conduits closer than three diameters on centers, except at cabinet locations where slab thickness is increased as permitted by Engineer.

G. Where conduits are concealed in bottom floor slab, place in concrete slab and not in fill below slab. Do not install aluminum conduit in concrete slab.

H. Use sleeves passing through exterior walls and slabs which are wall entrance seals of watertight construction. Furnish watertight seal between slab and sleeve, and between

sleeve and conduit and cable. Use wall-entrance seals of malleable iron with watertight sealing gland which may be tightened any time after installation.

I. Do not use dissimilar metals in conjunction with each other. Use suitable insulation between adjoining surfaces so as to eliminate direct contact and any resultant electrolysis. Maintain electrical continuity of system. Use bituminous impregnated felt, heavy bituminous coatings, nonmetallic separators or washers, or other acceptable materials as insulation.

J. Install fittings to match raceway being used.

3.03 BENDS

A. Make all bends carefully to prevent distortion of circular cross section. Field bend conduit to have an inside radius of not less than nine diameters.

B. Where bends of less than nine diameters are necessary, use standard factory elbows. Size conduit to permit cable-bending radius within the factory elbow of at least eight times cable diameter.

C. Use concentric bends in parallel runs. Allow no conduit to have more than two 90 degree bends or equivalent thereof between pulling points.

3.04 CUTTING, THREADING AND CONNECTING

A. Make all field cuts in raceways squarely, file cut ends, and remove burrs, and chamfer inside edge with conduit reamer. Install insulating bushing on each end of conduit or tubing, unless connector is designed to prevent contact with cut end. Make all connections mechanically strong and tight, and with acceptable connectors. Permit no running threads. Where surface coating is damaged or removed by cutting, threading or reaming restore to original condition.

3.05 CONDUIT CLEANING

A. Clean all conduit carefully before and after installation, ream ends free of burrs, and free inside surfaces from all imperfections likely to injure cable.

B. After installation of each complete new conduit run, snake the run with band to which is attached an acceptable tube cleaner with acceptable cylindrical mandrel of a diameter not less than, 85 percent of nominal diameter of conduit. Remove and replace all conduit through which mandrel will not pass.

C. Use a steel band and mandrel to clean steel conduit.

D. After cleaning, protect ends of all conduit with standard caps to prevent entrance of water, concrete, debris, or other foreign substance.

3.06 CONDUIT DRAINAGE

A. As far as practicable, pitch conduit to drain to outlet boxes, or install so as to avoid trapping moisture. Where dips are unavoidable in exposed conduits, install fitting with suitable drain hole at low point.

3.07 INSTALLATION OF BOXES

A. Install sheet metal boxes only in dry, accessible location. Do not install below grade, in outside concrete or masonry walls or in floor slabs subject to moisture. Sheet metal boxes cannot be used where vapor-tight fixtures are required for surface mounting of wall switches and receptacles or for any outdoor use.

B. Install boxes in conformity with all requirements of NEC. Install boxes designed for type of construction involved. Support boxes in same manner as required for conduit. Size boxes to provide bending radius for wire or cable of at least eight times diameter or in accordance with NEC, whichever is larger.

C. Center all outlets in panels, or spaces and adjust to structural finish. Where specific locations are not indicated, locate outlets with respect to equipment served.

D. Place all outlet boxes, junction boxes, pull boxes, etc., in accessible locations when they are installed above or behind plastered ceilings, furred spaces, or suspended ceilings. Install access panels of suitable size. Mark all access panels for all boxes so panels can be readily located in future. Mark, using metal tabs or plastic buttons which cannot mark ceilings or walls, appropriate for type of construction being used.

E. Assemble cast-metal boxes with threaded conduit hubs in such manner that conduit connections and gasketed covers are watertight. Close all unused threaded openings with pipe plugs and compound.

F. Provide cast boxes with cast covers and watertight gaskets. Install cover screws of stainless steel or high brass for iron boxes, and stainless steel for aluminum boxes.

3.08 MOTOR AND EQUIPMENT CONNECTIONS

A. At all motors and other electrically operated equipment to which conduit connections are required install complete connection between end of conduit and terminal box of motor or other equipment.

B. Terminate conduits extending up through floors in locations permitting direct connection to motors.

C. Make connections with flexible metal conduit.

D. Install flexible metal conduit, fittings, and accessories in accordance with requirements of NEC. Use flexible metal conduit only for connections to motors, or to other equipment

subject to vibration or adjustment. Make each connection with at least one quarter bend so that no vibration can be transmitted beyond flexible connection. Install visible bonding wire across flexible connection larger than 1-1/4-in. IPS size bonding wire in accordance with NEC; but in no case smaller than 6 awg. stranded.

E. Install liquid-tight flexible metal conduit, mechanically strong and watertight, and located to reduce possibility of damage to exterior coating. Use connectors that screw into flexible conduit and provide gaskets where needed.

3.09 HAZARDOUS AREAS

A. Install all conduits, fittings, equipment and devices within areas indicated to comply wit requirements of NEC for Hazardous Locations, Class, Division, and Group as indicated.

B. In such hazardous locations, seal conduits terminating at boxes enclosing circuit-opening equipment at entrance to enclosure with approved, compound-filled, commercial, sealing fittings to prevent passage of explosive or combustible gases through conduits.

C. Seal all conduits leading from or entering such hazardous locations at points of exit or entrance.

D. Install conduit connections with at least five threads tightly engaged, and made up with suitable thread compound.

END OF SECTION 260533.13

SECTION 26 05 43

UNDERGROUND DISTRIBUTION SYSTEM

PART 1 GENERAL

1.01 DESCRIPTION

A. Furnish and install complete underground distribution system as indicated and specified.

B. Adhere to lines, grades, elevations, arid dimensions. Resolve interferences with other underground conduit, piping or equipment, either new or existing with the Engineer. Match components suitable for proper installation.

C. Install concrete encasement of duct system where indicated. Include all necessary forms and reinforcing installation.

D. Furnish and install manholes and handholes complete with ground rods, windows, ladders, frames, covers, end bells, and other inserts. Use reinforced concrete:

1.02 REFERENCE STANDARDS

A. NEMA: National Electrical, Manufacturers Association, 2101 L Street, Northwest, Washington, D.C.

B. ANSI C2: National Electrical Safety Code Published by Institute of Electrical and Electronics Engineers, Inc., 345 East 47th Street, New York, NY 10017.

C. NFPA-70: National Electric Code, Published by National Fire Protection Association, Battery March Park Quincy, MA 02269.

1.03 SUBMITTALS

A. Submit shop drawings and manufacturers' product data in accordance with requirements of Section 01000.

PART 2 PRODUCTS

2.01 ACCEPTABLE MANUFACTURERS

A. Polyvinylchloride (PVC) Conduit

1. Triangle Conduit & Cable Co., Inc. New Brunswick, NJ.

2. Republic Steel Corp., Cleveland, OH.

3. Carlon, Inc., Cleveland, OH.

B. Rigid Steel Conduit, Galvanized

1. Section 16110

C. Fiber, Conduit, Type I

1. Ashland Chemical Co., Columbus, OH.

2. Bermico Co., W. Bend, WI.

D. Manhole Waterproofing Material,

1. Heavy Duty Black, No. 46-449, by Tnemec Company, Inc., No. Kansas City, MO.

2. Hi-Build Bituminous CJoating, No, 35-J-10, by Mobil Chemical Company, Edison, NJ.

3. Bitumastic Super Service Black, by Koppers Company, Inc., Pittsburgh, PA.

4. Acceptable equivalent.

E. Conduit Spacers: Furnish conduit spacers made of plastic to maintain spacing of 3-in. (76 mm) between conduits and 6-in. (150 mm) between power and communication conduits as indicated.

F. Concrete: Minimum compressive strength, 3,000 psi (210 kg per square centimeter).

G. Hot-dipped galvanized steel conduit painted with bituminous paint.

PART 3 EXECUTION

3.01 INSTALLATION OF CONDUITS

A. Lay conduits, indicated to be direct buried in the ground, in trench on 4-in. (100 mm) bed of sand and cover with, an equivalent 4-in. (100 mm) bed of sand. Ensure that no rocks come in contact with conduit during backfilling. Dig trenches to depth and location indicated. Do not allow top of ductbank to be less than 2-ft. (0.61 m) below finished grade.

B. Install conduit, indicated to be encased in concrete with concrete, spacers, reinforcing, etc., as specified and as indicated.

C. Install conduit runs following routing on drawing and running in straight lines as far as possible. Where deviation from a straight line becomes necessary, install bends of sufficient radius for proper rodding and installation of cable.

D. Accomplish changes in direction of runs exceeding total of 10 degrees, either vertical or horizontal, by long seep bends having minimum radius of curvature of 25 ft. (7.62 mm),

except that manufactured bends used at ends of short runs of 100-ft. (30.48 m) or less, and then only at or close to end of run. Long sweep bends made up of one or more curved or straight sections and/or combinations thereof. Install manufactured bends with minimum radius of 36-in. (915 mm) where larger radius cannot be used.

E. Lay duct lines to minimum slope of 4 inches (100 mm) per 100-ft. (30.48 m) and slope to manholes and handholes as indicated. Duct lines are to slope away from buildings where possible.

F. Prior to placing of concrete remove all dirt, sand, and any other debris from between conduits and from trench bottoms. Hold conduits in place to prevent floating or accidental movement.

G. Stagger joints in conduits at least 6-in. (150 mm). Do not allow couplings to rest on bottom of trench. Install couplings for plastic conduit in accordance with manufacturer's recommendations.

H. Install concrete encasements so minimum clearance of 12-in. (300 mm) from concrete to parallel pipes, lines, structures, etc., is maintained. Where ducts cross, minimum clearance of 6 inches (150 mm) will be acceptable. Do not allow the top of concrete to be less than 36-in. (915 mm) below finished grade or paving. Submit special conditions which may require lesser clearances to Engineer for approval.

I. Where a connection is made to existing ductline, firmly bond or dowel concrete encasement to existing encasement.

J. Do not use power-driven vibrators for spading of concrete around ducts.

K. Roll and grade backfill, and restore surface to condition at least equal to which it was found immediately before work was begun, or as otherwise indicated.

L. Locate duct-bank markers at ends of all duct banks except at manholes or handholes, at approximately every 2,000 ft. (61.0 m) along duct run, and at each change in direction of duct run. Place markers approximately on duct bank. Install markers 6-in. (150 mm) square or round section by 3 ft. (0.91 m) long made of Class B concrete. Imprint the letter "D" or cast it on top of the marker. Install top of duct arkers flush in paved areas, protruding no more 2-in. (50 mm) above finished grade in paved areas. In finished lawns, allow marker to pr1trude 1/2-in. (12.7 mm).

M. Keep conduits clean of concrete, dirt, and other substances during the course of construction. After the duct lines have been completed, pull a standard flexible mandrel not less than 12-in. (300 mm) long, having a diameter approximately 1/4-in. (6 mm) less than the inside diameter of the conduit, through each conduit, after which pull a brush with stiff bristles through each conduit to make certain that no particles of earth, sand, or gravel have been left in the line. Replace conduit runs that do not allow the passage of the mandrel at no additional cost to the Owner. Pneumatic rodding may be used to draw in the lead wire. Plug and seal spare conduits after cleaning.

N. Where electrical ducts cross under roads, encase them in reinforced concrete.

3.02 MANHOLES AND HANDHOLES

A. Construct manholes and handholes of Class A concrete cast in place or of precast-concrete sections, as indicated.

B. Install manholes with cable racks, hooks, insulators, and other features, as indicated.

C. Place a 6-in. (150 mm) crushed-stone base under each manhole and handhole.

D. Construct cast-in-place manholes and handholes with forms, complete with centering cores and molds, to conform to shape, form, line, and grade required and maintain sufficiently rigid to prevent deformation under load. Make all joints leakproof and arrange horizontally or vertically. Place forms on successive units for continuous surfaces and fit to accurate alignment, assuring a smooth completed surface, free from irregularities.

E. At convenient point close to wall, drive 3/4-in. by 10 ft. -0 long copper-clad steel ground rod into earth as indicated. Extend ground rod approximately 5-in (150 mm) above finished manhole floor. After completion of manhole, connect 6 foot (1.83 m) length of No. 4 bare copper ground wire to ground rod and coil it within manhole or handhole.

F. Size space, and place reinforcing bars as indicated and as specified.

G. Set manhole and handhole frames to the required grade, in full bed of concrete mortar to make watertight connection.

H. Unless otherwise indicated, install tops of manhole and handhole covers in unpaved areas approximately 1/2-in. (13 mm) above finished grade, and in paved areas install flush with finished surface of paving.

I. Install galvanized corrosion-resistant channel support, with continuous slot and required fittings designed for concrete encasement.

J. Install inserts in the manholes as indicated.

K. Install two cable pulling irons in wall opposite each duct bank entrance into manhole, one 6-in. (150 mm) above floor and one 6-in. (150 mm) below the roof of manhole. Where indicated on drawings, install additional features such as openings in manhole walls for future conduit entrances. Seal future entrance with required courses of brick.

L. Where duct lines enter manholes, terminate conduits in end bells. Terminate steel conduit entering manholes and handholes in grounding bushing.

3.03 MANHOLE AND HANDHOLE WATERPROOFING

A. Apply two coates of bituminous waterproofing material to exterior surfaces of manholes and handholes. Apply by brush or spray, in accordance with manufacturer's instructions. Allow time between coats to permit sufficient drying.

B. As-Built Drawings of Underground Work: Furnish one set of marked copies of contract drawings, showing exact routing and depths of all underground conduit, duct handholes and manholes. Furnish scaled plot plans, showing principal outline of buildings and structures. Reference conduits, ducts, and manholes, and all bends deviating from straight line, dimensionally from fixed objects, or structures.

END OF SECTION 26 05 43

SECTION 26 08 00

FIELD ACCEPTANCE TESTS

PART 1 GENERAL

1.01 DESCRIPTION

A. After electrical installation is complete, make tests to demonstrate that entire system is in proper working order and in accordance with drawings and specifications. Make no tests less than those outlined hereafter, unless requested in writing and approved by Program Manager. Tests are in addition to, and no substitution for, tests of individual items at manufacturer's plant. Make insulation and ground resistance tests before operating tests. Determine proper rotation of motors before permanent connections are made.

B. Pay all costs for tests including expenses incident to retests occasioned by defects and failures of equipment to meet specifications.

1. Replace wiring and equipment found defective, or failing to meet specified requirements, without charge.

2. Furnish three copies of all test results to Engineer.

3. Unless otherwise specified Owner will supply electric current necessary for tests.

1.02 REFERENCE STANDARDS

A. NEMA: National Electrical Manufacturers Association, 2101L Street, Northwest, Washington, D.C.

B. IEEE: Institute of Electrical and Electronic Engineers, 345 East 47th Street, New York, NY.

PART 2 PRODUCTS

2.01 TESTING EQUIPMENT

A. Calibration:

1. Furnish suitable electrical instruments including voltmeters, ammeters, wattmeters, tachometers and all other equipment necessary to perform tests specified. Furnish certified copies of calibration curves of these instruments which have been calibrated for specific tests.

2. Make necessary openings in circuits for testing instruments and place and connect all instruments, equipment, and devices, necessary for the tests. Upon completion of tests, remove instruments and instrument connections and restore all circuits to permanent condition.

3. Other sections of specifications require services of one or –more manufacturer's representatives, to ensure that equipment supplied has been installed properly and adjusted to proper working order. Advise representative of all applicable tests in this section, so that work will be coordinated, and tests combined where feasible.

2.02 TESTING

A. Coordination:

1. Coordinate activities, and cooperate with others on project to ensure that systems are energized when required, loads applied, and other requirements of Section are carried out on timely coordinated basis.

2. Conduct tests in presence of Engineer. Notify Engineer seven calendar days or more in advance when any test to be performed, and do not start tests without Engineer's permission.

B. Preparation:

1. Make up no high and/or medium-voltage connections at service entrance, transformers, substations, motors, medium voltage motor control centers, switchgear and generator permanently until correct phase rotation of all equipment is determined.

Install and insulate these connections temporarily, if necessary, while determining proper rotation. Have permanent connections after proper rotation has been established and subsequent to completion of insulation resistance and dielectric tests.

PART 3 INSULATION

3.01 INSULATION RESISTANCE TESTS OF CIRCUITS, 600 VOLTS AND BELOW

A. Do not subject conductors rated 600 volts and below to high potential dielectric tests. Test each complete feeder and branch circuit of 6000 volts or below with everything but power supply and power-consuming equipment, connected thereto, and have an insulation resistance, between conductors and between each conductor and ground of not less than 1,000,000 ohms, unless otherwise accepted y Engineer.

B. Determine insulation resistance values with all switchboards, panelboards, fuseholders, switches, receptacles, and overcurrent devices in place.

C. Use megohmeter having output of at least 500 volts to determine insulation resistance value for 600 volt rated conductors, and a 2400 volt megohmeter for 5 KV and 15 KV rated conductors.

D. List each circuit and measured resistance as test data.

E. Maintain record of all insulation resistance valued. Identify conductor, or equipment, date that value was taken and resistance value. Arrange information in suitable neat tabular form and turn to Engineer in triplicate

3.02 DIELECTRIC TESTS OF CONDUCTORS RATED 2400 VOLTS AND ABOVE

A. After all high and/or medium-voltage conductors are installed, and before connecting and putting into service, subject to dielectric tests. Perform direct current, high-potential tests form phase to phase and from phase to ground. Make tests as specified in latest edition of the applicable IPCEA-NEMA Standard.

B. Complete and enclose splices in conductor system being tested within all pull, junction or splice boxes before test is started, and complete all potheads and switchgear terminations. Disconnect potential transformers and all power consuming equipment or devices from circuit, if any are present.

3.03 GROUND RESISTANCE

A. Test each ground rod in accordance with IEEE Std. 142, and submit tabulation of results. Include identification of electrode, date of reading and ground resistance value in results.

B. Test each entire grounding system for continuity of connections and for resistance. Ensure that ground resistance of conduits, equipment cases, and supporting frames does not vary appreciably from that of system as whole and does not exceed 5 Ohms.

END OF SECTION 26 08 00

SECTION 26 24 16

PANELBOARDS

PART 1 GENERAL

1.01 DESCRIPTION

A. Furnish and install panelboards including circuit breakers and cabinets complete, in conformance with the latest NEMA Standards and Federal Specifications listed below.

1.02 REFERENCE STANDARDS

A. NEMA: National Electrical Manufacturers Association, 2101 L Street Northwest, Washington, .D.C.

1. PB1-1971 & AB1-1975

B. NEC: National Electrical Code, National Fire Protection Association, 470 Atlantic Avenue, Boston, MA.

C. UL: Underwriter's Laboratories, Inc., 333 Pfingsten Road, Northbrook, IL.

1. UL 67- 74 (Revise 1976) - Panelboards.

PART 2 PRODUCTS

2.01 PANELBOARD MANUFACTURERS

A. Manufacturers acceptable contingent upon products' compliance with the specifications:

1. General Electric Company, 1 River, Road Schenectady, NY.

2. Westinghouse Electric Corp., Distribution Equipment Division, 1945 Craig Road, St. Louis, MO.

3. Square D Company, Park Ridge, IL.

2.02 PANELBOARDS

A. Factory assembled deadfront type panelboards.

B. Furnish panelboards complete with branch circuit breakers and a main circuit breaker of main lugs only as indicated.

C. Furnish panelboards with full capacity separate ground bus and furnish panelboards connected to a 3-phase, 4-wire service with an insulated neutral bus.

D. Provide panelboards with the voltage, frequency and current ratings as indicated conforming to NEMA Standard PB1, Federal Specification W-P-115A. U.L. 67, and the N.E.C.

E. Furnish panelboards with main and neutral buses, with minimum 98 percent conductivity rectangular copper bars provided with bolted type lugs as necessary.

F. Drill buses to fit either "A","B" or "C" Phase connectors, and ensure that connectors are interchangeable and installed in a distributed phase sequence.

G. Silver plate buses, connectors and terminals to a minimum thickness of 0.005-in., conforming to the requirements of Federal Spec. QQ-S-365B.

H. Prevent Terminal Lugs from turning per NEMA standard PBI- 1971 and ensure they are suitable for the conductor material and size.

I. Main bus-bracing for each panel board shall be for 10,000 amperes symmetrical short circuit or as otherwise indicated.

2.03 CIRCUIT BREAKERS

A. Furnish bolt-on type branch and main circuit breakers. Furnish frame sizes, trip settings and number of poles as indicated. Circuit breakers shall have their ampere trip rating clearly marked and visible.

B. Furnish all breakers with quick-make, quick-break, toggle mechanisms and thermal-magnetic, inverse time-limit overload and instantaneous short circuit protection on all poles, unless otherwise indicated. Automatic tripping shall be indicated by the breaker handle assuming a clearly distinctive position from the manual ON and OFF position. Furnish breaker handle that is trip-free on overloads.

C. Do not use single pole breakers with handle ties or bails in lieu of multipole breakers.

D. Furnish handle lock device on breakers as indicated to prevent the manual opening of the selected breakers.

E. Furnish padlocking device on breakers as indicated to prevent the opening of indicated breakers.

F. Ensure that voltage and interrupting rating of all breakers in a panelboard is not less than voltage and short circuit rating of the panelboard main buses, as indicated. Furnish breakers suitable to operate satisfactorily at the frequency indicated.

G. Furnish ground fault interrupter circuit breakers for certain circuits as indicated on the drawings.

H. Furnish single pole breakers with full module size. Do not install two pole breakers in a single module.

I. Furnish Time-current characteristics curves and other necessary information and data for each size of breaker furnished.

J. Ensure that branch and main circuit breakers rated 120 and 240 volts have an interrupting rating of not less than 10,000 rms amperes, symmetrical, at rated voltage.

2.04 CABINETS

A. Cabinets shall be NEMA 1 type, unless otherwise indicate and shall be without knockouts. Drill cabinets only for the exact conduit entrances and mounting bolts.

B. Finish cabinet fronts, trims and surface-mounted boxes in ANSI NO. 61, light-gray enamel over a rust-inhibitive primer. Attach the fronts (exterior trims) to the boxes or interior trims, by quarter-turn, indicating trim clamps: Design cabinets for surface or flush mounting as indicated.

C. Unless otherwise specified, construct panelboard cabinets of code-gauge galvanized, sheet steel and equip with gutters of ample size for the risers and outgoing circuits. Ensure that the cabinets do not exceed 78-in. (1980 mm) in height.

PART 3 EXECUTION

3.01 INSTALLATION

A. Mount all panelboards such that the height of the top operating handle does to exceed 6 ft. 6-in. (1980 mm) from the floor.

B. Hang each door of the cabinet on semi- or fully-concealed hinges with a combination catch and lock.

C. On cabinets 48 in. (1200 mm) high and over, install a 3 approximate middle.

D. All Panelboard locks shall be keyed alike.

END OF SECTION 26 24 16

SECTION 26 27 26

WIRING DEVICES

PART 1 GENERAL

1.01 DESCRIPTION

A. Furnish, install, field test, and place in successful operating condition, wiring devices as indicated and as specified.

1.02 REFERENCE STANDARDS

A. NEMA: National Electrical Manufacturers Association, 2102 L Street Northwest, Washington, D.C.

B. Federal Specifications, Superintendent of Documents, U.S. Government Printing Office Washington, D.C. 20402.

1. W-S-896c(1) Switch, Toggle, Single Unit with wall plates.

2. W-C-596,b(1) Plug, Electrical Connector, Receptacle, Electrical.

C. Underwriters' Laboratories, Incorporated Standards.

PART 2 PRODUCTS

2.01 MANUFACTURERS

A. Arrow-Hart, Inc., Florence, KY.

B. Allen-Bradley Co., Milwaukee; WI.

C. Appleton Electric Co., Chicago, IL.

D. Bryant Electric, Div. of Westinghouse, Bridgeport, CT.

E. Cutler Hammer, Inc., Milwaukee, WI.

F. Crouse-Hinds Co., Syracuse, NY.

G. Harvey Hubbell, Inc., Bridgeport, CT.

H. Midland-Ross Corp., - Electrical Products Div., Pittsburgh, PA.

I. Sierra Electric, Div. of Sola Basic, inc. Gardena, CA.

2.02 WALL SWITCHES

A. Provide alternating current, general-use, snap switches, in flush device boxes or on outlet box covers, totally enclosed in composition case, with insulated mounting yoke and sidewired, binding screw type terminals. Single-pole, 2-pole, 3-way, or 4-way switches rated 20 amperes at 120/277 volts a.c.

B. Switches for controlling lighting:

1. Arrow-Hart Cat. No. 1991, 1992 or 1994
2. Harvey Hubbell Cat. No. 1221, 1222, 1223 or 1224
3. Bryant Electric Cat. No. 4901, 4902, 4903 or 4904
4. Sierra Electric Cat. No. 5721X, 5722X, 5723X or 5724X

C. Provide pilot lights for switches controlling lights in seldom frequented locations Consisting of either separate units or a 2-unit combination with separate switch and yoke-mounted candelabra base socket rated 75 watts, 125 volts, and fitted with a ruby lens. Provide a clear 6 or 7-watt lamp with each pilot.

2.03 WATERTIGHT SWITCHES

A. Provide watertight switches consisting of flush mounting switches in NEMA Type 4 gasketed cast metal boxes. Switch operable through shaft in matching cast metal cover, twenty-ampere, 120/277-volt switch enclosures:

1. Crouse-Hinds Type MC or MCC
2. Allen-Bradley Cat. No. 600-TCX-4
3. Cutler-Hammer Cat. No. 91-1 H 96

2.04 EXPLOSIONPROOF SWITCHES

A. Provide explosionproof switches consisting of flush mounting switches in cast metal boxes meeting requirements for NEMA Type 7D enclosure approved for use in National Electric Code Class I, Group D, Div. l, atmosphere. Switch operable through shaft in matching cast metal cover. 20-ampere, 120/277-volt switch assemblies:

1. Crouse-Hinds Type EFS
2. Midland-Ross Type EFS

3. Appleton Electric Type EFS

2.05 FLUSH RECEPTACLES

A. Provide twenty-ampere, 125-volt flush receptacles constructed in flush device boxes, and of grounding type in composition case with insulated mounting yoke, side-wired, binding screw-type terminals.

B. Duplex receptacles:

1. Arrow-Hart Cat. No. 5739-S
2. Harvey Hubbell Cat. No. 5362
3. Bryant Electric Cat. No. 5362
4. Sierra Electric Cat. No. 14602

C. Single receptacles:

1. Arrow-Hart Cat. No. 5361
2. Harvey Hubbe 1 Cat. No. 5361
3. Bryant Electric Cat. No. 5361
4. Sierra Electric Cat. No. 12605

2.06 CLOCK RECEPTACLES

A. Provide 3-wire, 15-ampere, 125-volt hanger receptacle with flush stainless steel plate for each clock:

1. Arrow-Hart Cat. No. 5708
2. Harvey Hubbell Cat. No. 5235
3. Bryant Electric Cat. No. 2828GS
4. Sierra Electric Cat. No. 2123

2.07 SPECIAL RECEPTACLES

A. Provide weatherproof devices rated 20 ampere, 125-volt, consisting of single receptacles with spring-loaded, soft-gasketed hinged covers with stainless steel spring.

Covers as follows:

1. Arrow-Hart Cat. No. 4500FS
2. Harvey Hubbell Cat. No. 5206
3. Bryant Electric Cat. No. 4510

B. Provide watertight, gasketed cast-metal enclosures with covers in areas subject to hose-down, meeting requirements, and either standard single or duplex type:
1. Appleton Electric Cat. No. AEE3382 and AEP3361, Style 2.
2. Crouse-Hinds Cat. No. ARRH3322 and APJ3385, Style 2.
3. Midland-Ross Cat. No. 3313 and 3317, Type SCA.

C. Provide receptacles with matching plug or cord cap designed to meet NEMA 4 requirements when plug, cord and receptacle are assembled.

D. Provide explosionproof 20-ampere receptacles, of the delayed action type, preventing contact from being broken until arc has been extinguished. Receptacles with angle covers and pring-closed flaps:

1. Crouse-Hinds Type CPS
2. Appleton Electric Type CPS
3. Midland-Ross Type EFS

E. Furnish one explosion proof plug for each three receptacles, with minimum of one, plugs to match receptacles and from same manufacturer:

F. Provide welding receptacles whereby plug ground contact makes contact with receptacle ground contact before current carrying contacts engage, and when withdrawing plug, ground contact remains engaged until after current carrying ground contacts disengage.

2.08 OUTLET BOXES AND ENCLOSURES

A. Provide outlet boxes and enclosures conforming to Section 16110, Electrical Raceway Systems unless otherwise indicated.

2.09 DEVICE PLATES

A. Provide device plates suitable for type of outlet boxes and enclosures used. Plates for flush-mounting by device manufacturer. Plates for surface-mounting boxes by either device manufacturer or box manufacturer.

B. Provide flush device plates of high corrosion resistant, Type 302 stainless steel. Provide plates of 93,000 series thickness, not less than 0.030 in.

C. Provide flush device plates with security (vandal proof) throughout.

D. Provide five (5) security screws screwdrivers at end of job to Owner.

2.10 NAMEPLATES

A. Provide nameplates or equivalent markings on switch enclosures to indicate ON and OFF positions of each switch. Do not use ON and OFF for 3-way or 4-way switches. Receptacles for special purpose shall hare nameplates indicating. their use, unless use is obvious. Nameplates shall otherwise conform to requirements specified under Section 16050.

PART 3 EXECUTION

3.01 CONNECTION

A. Securely and rigidly attach wiring devices in accordance with regulating agency, and as indicated, avoiding interference with other equipment.

B. Securely fasten nameplates using screws, bolts, or rivets and centered under or on the device, unless otherwise indicated.

3.02 GROUNDING

A. Ground all devices.

B. Ground switches and their metal plates through switch mounting yoke, outlet box, and raceway system.

C. Ground flush receptacles and their metal plates through positive ground connection to outlet box and grounding system. Maintain ground to each receptacle by spring loaded grounding contact to mounting screw, or by grounding jumper, both making positive connection to outlet box and grounding system at all times.

D. Ground explosionproof receptacles and plugs by making contract between the metal shells, and also by using a grounding pin to make contact before power contacts are made.

END OF SECTION 26 27 26

SECTION 26 51 00

LIGHTING

PART 1 GENERAL

1.01 DESCRIPTION

A. Furnish and install complete indoor lighting systems.

1.02 REFERENCE STANDARDS

A. Underwriters' Laboratories, Inc., 333 Pfingsten Road, Northbrook, IL.

B. National Fire Protection Association, Battery March Park, Quincy, MA, 02269 NFPA 70 1981, National Electrical Code.

C. Federal Specifications and Standards Superintendent of Documents U.S. Government Printing Office, Washington, D.C., 20402.

1. W-L-101(5) Lamp, Incandescent, (Electric, large, Tungsten Filament)

2. W-L-001166 Lamps, Fluorescent

3. W-L-142a Lampholder, adaptor, and shadeholder, medium screw-shell, 125, 250, and 600 volts.

D. American National Standards Institute:

1. Fluorescent Lamp Ballasts, ANSI C82, 1-1972 and Supplement C82.la.

2. High Intensity Discharge Lamp Reference Ballasts, ANSI C82.5-1975.

3. Mercury Lamp Ballasts, (Multiple Supply Type), ANSI C82.4-1974.

4. Electric Lamp Bases and Holders, Fluorescent Types, ANSI C81.20-1976.

5. Electric Lamp Bases and Holders, Screw-Shell Types, ANSI C81.10-1976.

1. 03 SUBMITTALS

A. Submit manufactures installation instructions in accordance with General Specifications.

B. Submit manufacturer's shop drawings including photometric data to show that fixtures proposed are of same type, construction and quality as those indicated. Lighting fixtures listed and labeled by Underwriters, Laboratories.

PART 2 PRODUCTS

2.01 MANUFACTURERS

A. Lighting equipment as indicated or specified.

2.02 LAMPS

A. Furnish lamps of types and wattages shown in fixture schedule.

B. Unless otherwise indicated, furnish fluorescent lamps suitable for 12-volt operation. Type: Rapid start, standard cool white, 48-in. long, 34 watt.

2.03 BALLASTS

A. Furnish high power factor type ballasts for fluorescent lamps. Ballasts are required to operate one, two, or four lamps as required by fixture schedule.

B. Ballast sound rating: "A"

C. Furnish ballasts class "p" type or equivalent protection, containing a nonrenewable, nonresetting thermal protector; designed for applicable indoor or outdoor use; conforming to UL standard 935.

D. Furnish ballasts with certified ballasts manufacturer (CBM) label.

E. Furnish ballasts with power factor not. less than 95 percent.

F. Furnish constant wattage (regulator) type ballasts for mercury vapor and metal halide lamps.

G. Ballasts: In non-air conditioned spaces, rate for operation in 40-deg. C temperature environment.

H. Furnish mercury vapor and other H.I.D. ballasts suitable for 120-volt, 277-volt or 480-volt operation as indicated.

2.04 FIXTURES

A. Furnish fixtures complete with lamps of wattage indicated.

B. Furnish each fluorescent fixture with ballasts of proper type and characteristics for lamps in fixture and with voltage rating as required by circuit in which fixture is connected.

2.05 EMERGENCY LIGHTING AND EXIT LIGHTING FIXTURES

Furnish types of fixtures shown in fixture schedule.

PART 3 EXECUTION

3.01 LIGHTING FIXTURES AND LAMPS

A. Install types and sizes indicated, complete. Deliver lamps of proper type, wattage and voltage rating to site and install in fixture prior to completion of project.

B. Install all fixtures to comply with applicable provisions of National Electrical Code. Suspend pendant fixtures by means of suitable. outlet box covertype aligners, each having flexible joint permitting unit to hang plumb. Install stems of 1/2-in. galvanized steel conduits, unless otherwise specified.

C. Use aligners of shock absorbing type, where, indicated.

D. Use vaportight aligners with vaportight fixtures.

E. Install each explosion-proof pendant fixture having stem longer than 12-in. (305 mm), with explosion-proof swivel or flexible fitting permitting fixture to hang plumb. Fixtures with stems shorter than 12-in. (305 mm) aligned by level outlet box mounting, explosion-proof swivels, or other-acceptable means:

F. Install recessed fluorescent fixtures in suspended ceiling openings in conformance with manufacturer's recommendations. Install fixtures with adjustable fittings to permit alignment with ceiling panels. install fixtures in fire-resistive type of suspended ceiling construction, equipped with fireproofing boxes constructed of materials of same fire rating as ceiling panels. Materials in conformance with UL approved building materials list.

G. Install accessories such as straps, mounting plates, nipples or brackets necessary for proper installation.

H. Connect emergency light fixtures to separate unswitched circuit in lighting panelboard in a lighting circuit breaker locked in closed position.

END OF SECTION 26 51 00

Division 16-Electrical

TABLE OF CONTENTS

SECTION	TITLE	PAGES
260511	ELECTRICAL WORKS – GENERAL	11
260519	ELECTRICAL WIRES AND CABLES	5
260526	GROUNDING	5
260533.13	ELECTRICAL RACEWAY SYSTEM	8
260543	UNDERGROUND DISTRIBUTION SYSTEM	5
260800	FIELD ACCEPTANCE TEST	3
262416	PANELBOARDS	3
262726	WIRING DEVICES	6
265100	LIGHTING	3

SECTION 260511

ELECTRICAL WORK GENERAL

PART 1 GENERAL

1.01 DESCRIPTION

A. Install electric power, lighting and grounding systems, including the installation and wiring of miscellaneous instruments and devices.

B. Furnish temporary circuits, over current devices, conduit and wiring, and other equipment required during change-over from existing to proposed electric system.

1.02 QUALITY ASSURANCE

A. Install electrical work-n conformance with latest rules and requirements of National Fire Protection Association Standard No. 70 (National Electric Code) and with requirements of the Puerto Rico Electric Power Authority.

1.03 SUBMITTALS

A. Shop Drawings and Data: Include manufacturer's drawings, bills of material, panel and equipment layouts, catalog data, wiring diagrams and other documentary or descriptive information as required for each assembly submitted in one package insofar as possible.

1. Bills of material: Include a numbered list of all components, with manufacturer's name; catalog number, rating, and other identification. Place item number or similar identification on all other drawings where item appears.

2. Where additions and modifications are made to existing equipment, provide drawings which include both retained existing equipment and new work.

3. Mark shop drawings and data submitted showing only items applicable to specific contract.

4. Make early submission of certain drawings where dimensions of equipment, location of conduit, entrances, etc., are important to facilitate construction.

5. Include one-line diagrams, schematic diagrams and wiring diagrams. Submit only completed drawings showing all local and remote devices associated with each item. Submit one complete package of shop drawings as far as possible. Partial submittals may be returned with but action.

6. Submit list of type and make of conduit, fittings, wires, cables, switches, fixtures, receptacles, pushbuttons, sleeves and inserts, etc.

7. Submit for installation, operation and maintenance of equipment, and parts list. Specifically mark standard publications forming a part of this contract. Cross out, blank out, or otherwise delete any non-applicable items.

8. Install nameplates on all devices or pieces of equipment for which use or identification not readily apparent, such as, starters, relays, contactors, pushbuttons, indicating lights, and switches. Ensure position of nameplates readable after equipment installation.

9. Submit samples of wires and cables.

10. As soon as possible after award of contract, submit all information and data on wires, cables, and other non delivery items proposed. Early submission for review and early ordering are required to avoid delays in completion of work.

1.04 INTERFERENCE AND ERRONEOUS LOCATIONS

A. Locations of electrical equipment, devices, outlets and similar items, as indicated, are approximate only. Exact locations determined or accepted during construction.

B. Verify, in field, all data and final locations of work, done under other sections of specifications, required for placing of electrical work.

C. In case of interference with other work or erroneous location with respect to equipment or structures, furnish all labor and materials necessary to complete work.

1.05 APPROVAL AND MARKING EQUIPMENT

A. Insure, that devices and materials are listed and/or labeled by Underwriters Laboratories, Inc. wherever standards have been established by that agency.

Where Underwriters Laboratories listing is not available for equipment, submit certified test reports of adequately equipped, recognized, independent testing laboratory, approved by the local inspecting authority, indicating that equipment is in conformance with local code requirements or any other applicable requirements. In lieu of independent tests test reports, written approval of equipment by local electrical inspecting authority will be acceptable.

B. Clearly mark equipment, devices and material with name or trademark of manufacturer and rating in volts and amperes and other pertinent information on a nameplate.

1.06 ELECTRIC SERVICE

A. Earth and rock excavation, backfill, concrete masonry, concrete reinforcement, and construction joints required for electrical work: Conform to requirements specified under applicable sections of specifications.

1.07 POWER SYSTEM STUDY

A. Obtain from manufacturer of substation a complete system protection coordination study of electrical distribution system with curves of each protective device indicated on common drawing, to verify proper selectivity and protection for all parts of system obtained. Include all calculations, selected equipment and devices, and recommended settings.

1.08 INCOMING SERVICE

A. The power company will install connections to transformer primary.

B. Contractor to furnish and install transformer substation, primary cable and conduit, secondary cable and conduit, stress cones, concrete pads, etc.

C. Furnish and install all necessary conduit and wire to service pole, extend conduit up pole for distance of 10 feet, and leave sufficient length of conductors to reach power company's overhead conductors. Connections at pole made by the power company. Perform work at service pole in accordance with power company's requirements.

D. Perform work at transformer substation in accordance with power company's requirements and in manner approved by power company.

PART 2 PRODUCTS

2.01 EMERGENCY GENERATOR AND TRANSFER SWITCH

A. Description

1. Furnish generator set complete with a fuel (Diesel) tank, automatic transfer switch(es), battery, automatic battery charger, and all the required accessories for normal operation.

2. Unit shall include the following equipment and accessories:

a. Water cooled radiator.

b. One (1) above ground dual wall fuel (Diesel) tank of 5000 gallons capacity with all fuel supply, return and ventilation lines and equipment.

c. One 24 volts, heavy duty battery with rack and cables.

d. Exhaust critical type muffler with steel connections and fittings, including flexible section and rain cap for exhaust.

e. Vibration isolators of the size, number and type required by the plant manufacturer.

f. Screen, baffled, louvered air intake.

g. Ducted, baffled, louvered and screened hot air discharge.

h. Pumps and filters as required.

i. Relays and Contractors as required for remote control from transfer switch.

j. Instruments and control panel including following:

1) Voltmeter and selector switch.
2) Ammeter and selector switch.
3) Wattmeter and selector switch.
4) Frequency meter and selector switch.
5) Running time meter.
6) Field circuit breaker(s).
7) Voltage regulator with a two (2) position (off and automatic) switch.
8) Water temperature gauge.
9) Oil pressure gauge.
10) Automatic shutdown device with indicator lights for:

a) Over cranking protection
b) High water temperature
c) Low oil pressure

11) Start/stop switch
12) Remote start/stop terminals.

k. Automatic transfer switch(es). Rated for operation at 60 Hertz and shall be provided with the required pilot lights on the door and with the following accessories:

1) Selector switch with off-automatic check position
Time delay in transfer to emergency engine start, adjustable from 1/16 to 180 seconds
2) Time delay on restoration to normal power adjustable from 30 second and 10 minutes.
3) Clock exercise to star generator set automatically, it shall operate every week and run the generator set for one (1) hour and then, stop the generator set automatically.
4) All other accessories required for normal operation.
5) Time delay relays and contractors (if so required).

B. Remarks

1. All elbows shall be of the long radius type.

2. The diameter of the exhaust pipe must be increased 1" for each 10 feet of vertical run after the first 10 feet.

3. The Contractor shall leave the tank full of diesel, fuel of the type required for operation of the emergency generator.

4. The Contractor shall make sure that the connections at the diesel fuel tank are tight before proceeding with the final installation of the tank.

5. The Contractor shall be responsible for providing the complete installation of the emergency generator with all its necessary fittings and appurtenances. This shall be done according to the manufacturer's specifications and instructions.

6. The Contractor shall also be responsible for leaving the emergency power generating system in perfect operating conditions.

7. The structural details shown in the electrical drawings for the support of the diesel fuel tank are of a general nature. It corresponds to the Contractor to provide the correct type and size of structural according to the actual dimensions and characteristics of the tank purchase.

8. At end of the project leave the generator diesel tank full.

2.02 SUBSTATION

A. Description

1. Tamper-proof transclosure with padlock provision on all doors.

2. Formed by steel sections ganged together with the sections having formed edges to provide rigidity. The unit shall be fabricated from 12 gauge stainless steel sections or 11 gauge galvanized steel sections coated with heavy duty phenix. Require that Puerto Rico Electric Power Authority (P.R.E.P.A.) standards, all transclosure located within one mile from the coast be made of 12 gauge stainless steel.

3. Sheet metal edges shall be exposed to the weather at a minimum angle.

4. Primary and secondary removable doors shall be provided with separate locks.

5. Unit shall be free-standing and rigid when all doors are removed.

6. Effective ventilation openings shall meet the national electrical code (N.E.C.) regulations given in Section 450-45 (B) and (C).

7. Ventilation openings shall be covered with standard expandable wire mesh of a sufficient number and type of installation as to provide tamper-proof ventilation facilities of adequate capacity to cool the transformers and electrical equipment inside the transclosure.

8. Roof shall be designed in a 4-way pitch to provide good water drainage.

9. All rust scales, weld metals fluxs and / or weld splatters shall be removed from all surfaces prior to painting. The primer coat shall be A.R.C. which is a cold galvanized process. The finish paint shall be P.R.E.P.A. standard gray.

10. A minimum of 6 grounding lugs shall be provided #4/0-AWG bare copper cable shall be used to ground all metal frames. in lieu of grounding lugs a continuous copper ground bus of adequate capacity can also be used in order to ground all metal frames as per N.E.C. and P.R.E.P.A. standards.

11. Transclosure shall be P.R.E.P.A. approved type suitable for outdoor installation. This also applies to the equipment inside the transclosure.

12. Transclosure shall be provided with glasstick safety barriers in all doors and access to live parts as per P.R.E.P.A. requirements. The glasstick barriers shall be so installed as to provide clear view of all the equipment components inside the cubicle.

B. Remarks

1. Transclosure dimensions shall be those approved by PREPA due to the code required clearances.

2. Contractor is responsible for verifying with PREPA the availability of the metering equipment to be installed in this project.

3. Contractor is responsible for anchoring the transclosure to the concrete base in an approved manner.

2.03 METERING EQUIPMENT

A. Obtain from power company drilling templates, dimensions, and mounting arrangements for metering transformers.

B. Ensure that metering equipment installation is in accordance with requirements of power company by submitting drawings, sketches, catalog information and other appropriate material for power company approval.

2.04 CONDUCTORS

A. Unless otherwise indicated all conductors shall be copper.

B. All building conductors shall be THWN/THHN-600V. Insulation

C. Up to #10-AWG use solid conductors, all larger sizes shall be stranded conductors.

D. Conductors Sizing

All conductors shall be #12-AWG except when otherwise indicated in the drawings or as indicated below for 20 AMPS switch conductors sizing.

All 20 AMPS, 120 volts circuit runs shall be as follows for the indicated length of circuit run:

Length of Circuit Runs	***Conductors Size***
Up to 100'	#12 - AWG
From 101' up to 200'	#10 - AWG
From 201' up to 300'	#8 - AWG
From 301' up to 400'	#6 - AWG

All 20 AMPS, 277 volts circuit runs shall be as follows for the indicated length of circuit run:

Length of Circuit Runs	***Conductors Size***
Up to 200'	#12 - AWG
From 201' up to 350'	#10 - AWG
From 350' up to 500'	#8 - AWG

E. Provide a ground conductors in all the conduits.

F. Provide a #12-AWG green jumper between the receptacle grounding screw and the cutlet box grounding screw.

G. Provide a #12-AWG THHN/THWN first wire in all empty conduits.

2.05 CONDUITS

A. Unless otherwise indicated all conduits shall be 3/4" in diameter minimum.

B. Unless otherwise indicated in the drawings the following conduit work shall apply:

1. All conduits installed underground shall be PVC SCH. 40.

2. All conduits installed embedded in floor slabs which are in direct contact with the earth, shall be PVC SCH. 40.

3. All conduits installed embedded in walls, ceiling slabs and in floor slabs which are not in direct contact with the earth shall be EMT.

4. All conduits installed in the area between hung ceilings and ceiling slabs or metal decks shall be EMT.

5. All conduits installed exposed in indoor areas shall be EMT.

6. All conduits installed exposed in outdoor areas shall be PVC COATED HEAVY WALL RIGID GALV. STEEL.

7. Final connections to all motors and electrical equipment shall be done with liquidtight flexible steel conduit.

C. All underground conduit couplings shall be watertight.

D. Provide an expansion joint coupling of the required type and size whenever a conduit crosses an expansion joint.

E. Provide plastic conduit dividers in all underground conduits runs. Maximum distance between dividers to be 4'-0".

2.06 WIRING DEVICES

A. Unless otherwise indicated, all wiring devices shall be white colored with 302 stainless steel cover plates, except the weatherproof of outlets which shall have their standard gray cover plates.

B. When two or more wiring devices are shown together in adjacent positions and at the same height, they shall be installed in a multiple gang outlet box of the proper size so that only one raised cover plate of the required type and size are used. 120V and 277V outlets must be installed on separate boxes.

C. All dimmers shall be of the slide type.

D. All wiring devices to be specification grade.

2.07 PANELBOARDS

A. All panelboards and load centers shall be provided with a factory installed ground bus for connecting to ground all the ground wires or cables entering or leaving the panelboard. The ground bus shall be similar in size and characteristics to the neutral bus. All panelboard shall have a monoflat front and key lock.

B. When two or more panelbaords or cabinets are shown together in adjacent locations, the top of all panelboards or cabinets shall be aligned with the top of the biggest one so that all the tops are at exactly the same height from the finished floor.

C. Contractor must make sure that the entire electrical system has ground continuity.

2.08 TELEPHONE CABINETS

A. Telephone terminals cabinet shall be approved equal to Columbia metal, type "PF" with the door hinges, lock and 3/4" plywood backboard cover at the bottom of the cabinet.

PART 3 EXECUTION

3.01 GENERAL

A. All the electrical installation shall be done in a neat and workmanlike manner, according to the last edition of the national electrical code, the Puerto Rico Electric Power Authority latest standard and the Puerto Rico Telephone Company latest practices.

B. The Contractor shall visit the job site and become acquainted with the existing field. conditions. It shall be the direct responsibility of the Contractor to bring promptly to the attention of the engineer any discrepancies between the existing field conditions and those that were used for design purposes. This shall be done before the Contractor submits his bid, so that the engineer can render a decision on the matter before the bids are received. The submittal of the bid by the Contractor will be held as proof that the Contractor understand thoroughly and completely the Scope of Work involved, has familiarized himself with the existing field conditions, and has included in his bid all the items necessary to perform the electrical work. No allowance will be permitted on this matter after the bids are received.

C. Unless otherwise indicated all outlets shall be flush mounted and shall have their own independent outlet boxes. Minimum size of outlet box to be 4" square and 1 1/2" deep. Exact size of outlet box shall be determined according to the maximum number of conductors in the box per N.E.C. Article 70-Section 6.

D. All indicated heights are from center of box to finished floor.

E. Contractor shall balance all loads.

F. Route of conduits shown in the layout is schematic and intended only to indicate interconnections between outlets. Exact conduit routing shall be determined at the jog site to conform with the structural conditions and shall be subject to the final approval of the architect/engineer.

G. In conduit runs, the numbers of arrows designate the number of circuits in the conduit (one pole in the panelboard per each circuit). The number of lines designate the number of conductors in the conduit, the longer line being a neutral conductor and "1" being the ground conductor.

H. CI in lighting outlet, C1 indicates the circuit number, L1 indicates the luminary L1____ type from the luminary schedule and 1 indicates the switch controlling unit. C3____ in receptacle outlet, C3 indicates the circuit number.

I. It shall be the responsibility of the Contractor to verify the voltage characteristics as the site with the utility company at the time of installation before ordering any primary equipment.

J. All the self-standing and surface mounted electrical equipment as well as the luminaries shall all be braced for seismic shock according to the seismic restraint manual guidelines for mechanical systems. The same applies to all the conduit work. The details and installation methods in said manual shall be modified as required to fit the electrical installation of the project.,

K. For final location of mechanical and medical equipment see corresponding mechanical and architectural drawings. Contractor to relocate electrical rough-in accordingly at no additional cost to Owner.

L. All pedant mounted luminaries shall be installed using stems, 2 stems per each 4' luminary. Stems shall be painted of the color required by the Architect.

M. Normal power and emergency power switch must be installed in separate conduit runs.

3.02 REMOVAL AND RELOCATION OF MATERIAL AND EQUIPMENT

A. Carefully dismantle and salvage electrical equipment, switches, fixtures, conduits, cables, wiring, etc. as necessary to carry out proposed changes. Rehabilitate and relocate items of equipment as required and as indicated or specified.

B. Deliver material and equipment not indicated for reuse to Owner for his disposal.

3.03 PROTECTION OF ELECTRICAL EQUIPMENT

Protect electrical equipment from the weather, especially from water dripping or splashing upon it, at all times during shipment, storage; and construction. Do not store equipment outdoors. Where equipment is installed or stored in moist areas, such as unheated buildings, etc., provide acceptable means to prevent moisture damage, such as uniformly distributed source of heat to prevent condensation. Protective means, as acceptable by Engineer.

3.04 DEFECTIVE OF DAMAGED EQUIPMENT

Thoroughly dry out equipment or material subjected to possible water damage, and put through special dielectric test as directed, without additional compensation.

END OF SECTION 260511

SECTION 260519

ELECTRIC CONDUCTORS

PART 1 GENERAL

1.01 DESCRIPTION

A. Furnish and install all (conductors wires and cables) necessary for complete electrical systems, as indicated and specified.

1.02 REFERENCE STANDARDS

A. NEC: National Electrical Code: National Fire Protection Association, 470 Atlantic Avenue, Boston, MA.

B. U.U. Underwriters Laboratories, Inc., 333 Pfingston Road, Northbook, IL

1. U.L. 44 - Wires and Cables Rubber Insulated

2. U.L. 83 - Wires Thermoplastic Insulated

3. U.L. 854 - Cables, Service Entrance

C. NEMA: National Electrical Mfg's Association, 2101 L Street, N.W. Washington, DC 20037

1. WC 3 - Rubber Insulated Wire & Cable

2. WC 5 - Thermoplastic Insulated Wire & Cable

3. WC 7 - Cross Linked Thermosetting Polyethylene - Insulated Wire & Cable
4. WC 8 - Ethylene-Propylene Rubber Insulated Wire & Cable
5. WC 30 - Color Coding of Wires & Cable

1.03 SUBMITTALS

A. Shop drawings and manufacturer's product data in accordance with requirements of Section 01000.

B. Two samples of each type of wire. Samples of necessary length with manufacturer's name and number or type, voltage rating, conductor size, and insulation type on each conductor sample. Color code all control, indicating and metering wiring, and lighting branch-circuit wiring.

1.04 MANUFACTURER'S COMPLIANCE

A. Contingent upon products' compliance with specifications.

B. 15 KV CABLE

1. General Electric Company, 1260 Boston Avenue, Bridgeport, CT - Type

2. Rome Cable Division of Alcoa, 1501 Alcoa Building, Pittsburgh, PA - Type XLP

3. Triangle Conduit and Cable Company, Inc., PO Box 711, New Brunswick, NJ - Everene Cable

4. The Anaconda Company, Wire and Cable Division, Greenwich, CT

C. 600V, 480V, 380V, 220V, 208V, 200V, 120V, 115V cable:

1. General Electric Company

2. Rome Cable Division

3. The Rockbestos Company, 550 Nicoll Street, New Haven, CT

D. Control ad metering wire:

1. The Rockbestos Wire and Cable Company, single and multiconductor, 600V control cable.

2. General Electric Company - Vulkene control cable, Type SI.

3. Rome Cable Company - control cable, 600V, Type B, Size 12, 7 strand.

E. Cable fireproofing tape:

1. MAC Products, Inc., 60 Pennsylvania Avenue,
Kearny, NJ

2. Acceptable Equivalent.

PART 2 PRODUCTS

2.01 MATERIALS

A. Furnish copper conductors. Material and stranding of conductors: Conform to ASTM B 33-80 ASTM B3-80, and to ASTM B 8-77, for the appropriate class. No. 12 Awg minimum wire size unless otherwise noted.

B. Tinned wire used with natural rubber insulation: Conforms to ASTM B 33. Uncoated, soft or annealed copper wire conforming to ASTM B3-80.

C. 15 KV/5 KV Cables: Single-conductor, shielded, grounded cross-linked polyethylene insulated, 90 degrees C., copper conductors. The outer jacket: polyvinylchloride.

D. Wires and cables for maximum 600 volt power circuits: Type XHHW rated RHW with cross-linked polyethylene insulation, Type RHW-75C with rubber or rubberlike insulation and neoprene jacket or ethylene propylene rubber EPR.

E. Wires and Cables for lighting and other 120/240 volt and 120/208 volt circuits: Type THW-75C.

F. Wires and Cables for control, indicating, metering, or alarm circuits: single and multi-conductor control cable, copper conductors, Class B or C stranding. Insulation, 600 volt polyethylene, polyvinylchloride, or E.P.R.

G. Shielded cable for instrumentation wiring: 19 strand copper conductors, size no. 16 AWG. Insulate conductors individually with color coded polyethylene or polyvinylchloride. Twist pairs twisted with varying lay (if more than one pair) and cover with cable tape and copper or aluminum coated mylar shielding tape and tinned copper drain wire. Jacket: polyvinylchloride. Cables: rated 600 volts and 90 degrees C.

PART 3 EXECUTION

3.01 GENERAL INSTALLATION

A. Install wiring in accordance with applicable provisions of National Electrical Code, and as indicated.

B. Wire and cable sizes are indicated however, in no case use smaller cable sizes than required by the National Electrical Code.

C. Unless otherwise indicated, use no conductor smaller than No. 12 AWG.

D. Conductors for branch lighting circuits: Install conductors of sizes that greatest voltage drop between lighting panel and center of load will not exceed 3 percent at rated load.

E. Number and sizes of wires and conduits indicated are guide only and are not necessarily correct numbers and sizes necessary for actual equipment installed. Install as many wires and conduits as required and necessary for complete electrical system, and provide adequately for the equipment actually installed.

F. Install conductors continuous from outlet to outlet and make no splices except within outlet or junction boxes.

G. Draw all conductors contained within single conduit at same time.

H. Apply wire pulling compound if required to conductors being drawn through conduits. Use pulling compound, Minerallac No. 100, Y-er-Eas, Yellow 77 or acceptable equivalent.

I. Use no cable bend with radius of less than eight times its diameter.

J. Wires and cables installed without prior submittal review and approval are subject to removal at no additional expense to owner.

K. Support cables in rise conducts at intervals as required by National Electrical Code.

3.02 15 KV AND 5 KV CABLE SPLICING AND TERMINATIONS

A. Use primary 15KV/5KV cable terminations with rating of 15,000 volts/5,000 volt. Ensure that standard withstand conforms to IEEE Std. 48 and is in compliance with specification Section 16999, Field Acceptance Tests. Use potheads, elbow connectors, clamp type connectors or termination as recommended by equipment manufacturer.

B. Ensure that all splicing and terminating of 15 KV and 5 KV cable is in accordance with designs, materials, and instructions set forth by cable manufacturer.

C. Wrap cables in manholes with fireproof tape which meets ASTM D626. Install tape in accordance with manufacturer's instructions.

3.03 CONDUCTOR IDENTIFICATION

A. Lable each wire at both termination points. Carry individual conductor or circuit identification throughout, with circuit numbers or other identification clearly stamped on terminal boards and printed on directory cards in distribution cabinets and panelboards.

B. Identify each wire in junction boxes, cabinets, and terminal boxes where total number of control, indicating, and metering wires is three or more and no terminal boards is provided, including all power wire by means of plastic-coated, self-adhesive, wire marker.

C. In cases similar to above where terminal boards are provided for the control, indicating, and metering wires, identify all wires including motor leads and other power wires too large for connection to terminal boards, by wire markers as specified above.

D. In manholes, identify each wire by laminated plastic tag located so easily seen.

3.04 CONNECTORS, TERMINAL LUGS AND BOARDS

A. For wiring of circuits consisting of No. 10 or No. 12 AWG solid wires, such as for lighting branch circuits, utilize self-insulated pressure type connectors for all splices or joints.

B. Terminate all wires connected to terminal boards, terminal blocks, or to other similar terminals by means of ring and tongue, nylon self-insulated, tin-plated copper pressure terminals.

C. Fabricated terminal boards, installed where indicated, of type 600 volts, 30 amperes, screw terminals, with white marking strips for wire identification, of the 4-, 6-, 8-12 pole type, as necessary.

D. Clearly and permanently mark terminal strips with ink or indelible pencil. Mark each wire consistently throughout entire system, using notation of wires given on manufacturer's wiring diagrams wherever possible.

END OF SECTION 260519

SECTION 26 05 26

GROUNDING

PART 1 GENERAL

1.01 DESCRIPTION

A. Furnish and install a single, complete, integrated grounding system, including all conductors, raceways, and connections, specified and indicated.

B. Include grounding of switchgear, substations, motor control centers, electric equipment enclosures, etc., outdoor substations, transformers, switch structures, etc.; ground grid systems with ground rod and water pipe connections; structural steel, and lightning protection system.

C. Include grounding conductors completely interconnecting water supply pipe, ground rods, ground grid, substation, switchgear and motor control center ground buses, other distribution equipment, and other groundable equipment.

1.02 REQUIREMENTS OF REGULATORY AGENCIES

A. Install complete grounding system in accordance with codes, and standards.

1.03 REFERENCE STANDARDS

A. American National Standards Institute:

1. ANSI C2.-1978 National Electrical Safety Code

B. National Fire Protection Association, 470 Atlantic Avenue, Boston, MA:

1. NFPA 70-1981 National Electric Code

2. NFPA 78-1975 Lightning Protection Code

1.04 TESTS

A. Measure ground grid resistance with earth test megohmeter and install additional ground rods and conductors as required until resistance to interconnected ground system is 5 ohms or less. Measure ground resistance in normally dry conditions and not less than 48 hours after rainfall.

PART 2 PRODUCTS

2.01 MANUFACTURERS ACCEPTABLE

A. Contingent upon products' compliance with the specifications.

B. Ground rods - Copperweld Corporation, 2 Oliver Plaza, Pittsburgh, PA.

2.02 CONDUCTORS

A. Furnish soft drawn stranded copper grounding conductors. Minimum size of unenclosed grounding conductor shall be No. 6 Awg. All conductors shall be protected if physical damage would result from exposure.

B. Furnish bare conductors where buried in earth or where embedded in concrete.

C. In buildings run insulated grounding conductors with green insulation only.

D. Furnish insulated grounding conductors with insulation rated at 600 volts.

E. Furnish grounding conductors for installation in all non-metallic raceway in addition to, and not to be considered as, the neutral wire of the system.

F. Connect a grounding conductor between panelboard and grounding system. Where a grounding bar is furnished with panelboard, connect grounding conductor to bar.

2.03 GROUND BUS

A. Furnish a 2-in. by 1/4-in. copper bar complete with bolted type connectors as indicated. Connect grounding conductors from equipment in area to this ground bus. Connect ground bus to grounding system. Mount ground bus on 600-V. pedestal insulators:

2.04 CONNECTIONS

A. Make all buried and concealed ground connections by exothermic welding.

B. Make accessible connections to structural members by exothermic welding process or by bolted connector. Connections to equipment or ground bus by acceptable bolted connectors. Furnish bolted ground connectors suitable for, and matching, grounding provisions furnished.

C. Furnish copper, brass, or silicon bronze ground lamps for use on copper or bass pipes.

D. Furnish ground clamps, for use on iron pipes, of galvanized or malleable iron, or of standard noncorrosive material.

E. Furnish ground clamps for use on pipes, with rigid metal base providing good contact by proper seating on the pipe. Do not use strap type clamps.

F. Design cable to ground rod connectors capable of being installed without having to pass over end of ground rod.

G. Where conduits are not effectively grounded by firm contact with a grounded enclosure, apply grounding bushings on at least one end of conduit run.

H. Furnish copper-clad steel or galvanized steel ground rods; type, diameter and length as indicated on drawings.

PART 3 EXECUTION

3.01 INSTALLATION OF GROUNDING CONDUCTORS

A. Install grounding conductors so not exposed to physical damage. Install connections firm and tight. Arrange conductors and connectors so no strain on connections.

B. Run grounding conductors associated with direct burial cables in common trenches above or if indicated beside cables.

C. Bury equipment grounding conductors 18-in. deep. Bring loops or taps up for connection to equipment or other items to be grounded.

D. Where raceways are used to contain and protect grounding conductors, install in accordance with Electrical Raceway Systems Section.

E. Where bare grounding conductors are contained within metallic raceways, bond ends of raceways to conductors by suitable fittings.

F. Install loop type, low impedance, grounding system interconnecting all components so at least two grounding connections are provided for each major item of electrical equipment. Ensure that severing of any single grounding conductor in this system does not remove grounding protection on any major item.

G. Connect structural steel at locations indicated by an external perimeter loop of grounding conductor installed around all sides of building foundation, buried at least 18-in. (450 mm) below grade, and connect to each vertical column by loop or tap. Connect two opposite points on external loop to two different points on grounding system.

H. Perform exothermic welding with properly sized molds in good condition.

3.02 INSTALLATION OF GROUND RODS

A. Install ground rods in manholes in accordance with requirements specified under the Section Underground Distribution Systems. Connect each grounding conductor entering a manhole to ground rod.

B. Install ground rods where indicated. Install the top of the rod 12-in. below the ground surface. Measure ground resistance of electric power service ground rod and if it is not 25 ohms or less, drive additional rods to obtain resistance of 25 ohms or less.

C. Make connection to overall grounding system as indicated.

D. Ensure that final resistance of interconnected ground system is 5 ohms, or less. Measure ground resistance in normally dry conditions, and not less than 48 hours after rainfall.

3.03 EQUIPMENT GROUNDING

A. Ground each piece of electrical equipment by means of a grounding conductor installed in raceway feeding that piece of equipment with copper wire sized in accordance with National Electric Code. Grounding conductors installed in conduit furnished with green, 600-volt insulation.

B. Connect transformer cases and neutrals to grounding system. Connect neutral ground connection at transformer terminal. Provide two separate, independent, diagonally opposite, connections for power transformers so removal of one connection will not impair continuity of other.

C. Connect two separate ground connections from ground grid to ground bus of switchgear assemblies, motor control center and all outdoor substation equipment. Ensure that each connection for item of equipment is from different section of ground grid.

D. Install a separate grounding conductor from ground system to motors of 100 hp. and larger, in addition to raceway system. Ground motor ground connection to motor frame, independent of mounting bolts or sliding base. Ground motor to nearest point on grounding system unless otherwise indicated.

E. Connect lightning arresters to ground system by suitable conductors.

F. Connect emergency generator neutral to grounding system by a grounding conductor of size required by National Electrical Code, unless a larger size is indicated. Connect grounding conductor to generator disconnect enclosure and generator neutral on generator side of disconnect. Ground generator frame with two separate independent connections, so removal of one connection will not impair continuity of other.

G. Ground each street lighting standard by ground rod driven near base of standard, in accordance with requirements of National Electric Safety Code. Connect ground rods to grounding conductor brought with street lighting feeder cable.

H. Ground transformers, lightning arresters, insulators etc., installed on poles, poles and timber structures on metal structure. Run grounding conductors between poles or structure and ground rods. Protect grounding conductor by molding applied for at least 8 ft. above ground, with both molding and conductor stapled. Install ground rod where indicated, and driven until top of rod is 1 ft. below ground. Measure ground resistance of rod and if not 25 ohms or less, drive additional rods to obtain resistance of 25 ohms or less.

I. Ground wire fences when used to enclose electrical equipment. Unless otherwise indicated, provide minimal grounding by buried outside peripheral ground loop; connections to each corner fence post and nearby ground rod; flexible connections to

each gate; and at least two connections to grounding system from approximately opposite positions on fence.

J. Also connect the ground rods to the grounding conductor run with the direct burial cable.

3.04 COMMERCIAL GROUNDING

A. Telephone:

1. Install one No. 2 insulated ground conductor to ground bus in telephone equipment cabinet.

2. Connect one No.12 insulated ground conductor to all 68 conduits terminating at backboard.

END OF SECTION 26 05 26

SECTION 26 05 33.13

ELECTRICAL RACEWAY SYSTEMS

PART 1 GENERAL

1.01 DESCRIPTION

A. Furnish and install complete raceway systems, with all accessories, fittings, boxes, etc., as indicated and specified.

B. All raceway runs are shown diagrammatically to outline general routing of raceway. Avoid interfering with pipes, ducts, structural members, or other equipment. Deviations in accordance with Engineer, after acceptance, and without additional compensation.

1.02 REFERENCE STANDARDS

A. NEC: National Electrical Code: National Fire Protection Association, 470 Atlantic Avenue, Boston, MA.

B. UL: Underwriters' Laboratories, Inc., 333 Pfingsten Road, Northbrook, IL 60062, USA.

C. ANSI: American National Standards Institute, Inc., 1430 Broadway, NY , N.Y. 10018 USA.

D. NEMA: National Electrical Manufacturers Association, 2102 L Street, Northwest, Washington, D.C.

1.03 SUBMITTALS

A. Submit shop drawings and manufacturer's product data in accordance with requirements of General Specifications.

PART 2 PRODUCTS

2.01 MANUFACTURER'S COMPLIANCE

A. Manufacturers acceptance contingent upon products' compliance with specifications.

B. Rigid Metal Conduit:

1. Triangle Conduit & Cable Company, 6900 Jersey Ave., New Brunswick, NJ 08903, USA.

2. Republic Steel Corporation. 144: 1-T Republic Building, Cleveland, OH 44101, USA.

3. Robroy Industries, River Road, Verona, PA 15147, USA.

C. Polyvinylchloride (PVC) Conduit:

1. Triangle Conduit & Cable Company, New Brunswick, NJ, USA.

2. Republic Steel Corporation, Cleveland, OH, U.S.A.

3. Carlon Inc., Cleveland, OH USA.

D. Flexible Conduit:

1. American Flexible Conduit Company, P.O. Box A -2094, New Bedford, MA 02741, USA.

2. Anaconda Metal Hose, Brass Division, 700 South Main Street, Waterbury, CT 06723, USA.

3. International Metal Hose Company, Goodrich Road & Sullivan Avenue, Bellevue, OH 44811, USA.

2.01 MATERIALS AND COMPONENTS

A. Rigid Metal Conduit:

1. Furnish galvanized rigid metal conduit with a coupling on one end and thread protector on other.

2. Hot-dip galvanize rigid steel conduit over entire length, including threads. Conduit conforming to ANSI Standard C80.1-1966.

B. Flexible-Metal Conduit:

1. Match flexible-metal conduit, fittings, size, and material to rigid conduit to which it is connected, unless otherwise indicated.

2. Liquid-tight flexible-metal conduit consists of flexible, corrosion-resistant metal conduit, with watertight synthetic jacket extruded over the conduit and a continuous copper ground under the jacket. Where ground is not included as in sizes greater than 1-1/4". IPS furnish separate external ground wire. Liquid-tight flexible-metal conduit conforming to UL Standard 360.

C. Polyvinylchloride (PVC) Conduit:

1. Furnish PVC conduit, EPC-40-PVC, for direct burial or exposed in extra severe conditions conforming to industry NEMA Standard TC 2-1975 and UL listed for indicated application.

2. Furnish PVC conduit, EPC-40-PVC, for normal exposed conditions in ductwork, or for use in all corrosive atmospheres specifically chlorine, conforming to industry NEMA Standard TC 2-1975 and UL listed for the indicated application.

D. Polyvinylchloride-Coated Rigid Steel Conduit:

1. Polyvinylchloride-coated (PVC-coated), rigid steel conduit shall be hot-dipped galvanized rigid steel conduit, as specified hereinbefore, with a polyvinylchloride jacket not less than 40 mils thick, bonded to the conduit. The adhesive strength of the bonding shall be equal to or greater than the tensile strength of the coating. Couplings and fittings for this conduit shall include an integral, bonded overlapping pressure-sealing sleeve of the same insulation thickness. The sleeves shall extend one pipe-diameter or 2" (whichever is less) beyond the end of the coupling. When coupled together, the sleeve of the coupling shall make a watertight fit with the plastic jacket on the conduit.

E. Boxes:

1. Furnish standard, sheet-metal, outlet and junction boxes constructed of code-gauge" galvanized sheet steel. Size each box as required by the NEC.

2. Furnish boxes containing fixture studs for hanging fixtures. Furnish concrete-tight boxes for installation in concrete. Do not use shallow boxes unless building construction is such that it is impossible to use standard-depth boxes.

3. Outlet boxes and fittings for hazardous locations conforming to ANSI-Standard C33.27 for class, group, and division indicated.

4. All cast-iron boxes shall be manufactured by O.Z. Electrical MFG. Co., Brooklyn, NY; Appleton Electric Co., Chicago, IL; Crouse-Hinds Co., Syracuse, NY; or be an acceptable equivalent product.

5. All cast-aluminum boxes shall be manufactured by Crouse-Hinds Co., Syracuse, NY; Killark Electric Manufacturing Co., St. Louis, MO; Adalet MFG. Co., Cleveland, OH; or be an acceptable equivalent product.

6. Boxes and covers for use with polyvinylchloride coated steel conduit shall be galvanized cast boxes as above, with a polyvinylchloride factory-applied coating over the galvanizing. The coating shall have a 40-mil thickness and the boxes shall have hubs with extruded sleeves extending beyond the hub in the same manner as specified for conduit couplings. Cover screws shall be stainless steel.

7. Cast boxes shall be provided with cast covers and watertight gaskets. Cover screws shall be stainless steel or high brass for iron boxes, and stainless steel for aluminum boxes.

8. Polyvinylchloride boxes shall be used with polyvinylchloride conduit. The size of each box shall not be less than that which is required by the National Electrical Code. Boxes shall be manufactured by Carlon, Cleveland, OH; Crouse-Hinds Co., Syracuse, NY; Raco, Inc., South Bend, IN; or be an acceptable equivalent product.

9. Pull boxes used below motor control centers shall be constructed of angle or channel frames, and sheet metal with weld joints. All welds shall be ground smooth. Neoprene gaskets shall be provided for complete sealing. Covers longer than 40" shall be sectionalized to facilitate handling. Sectionalized covers shall be gasketed where covers meet, using angle iron or channel cross, members at the joint. Sheet metal shall be not less than No.12 gage galvanized sheet steel. Interior angles and supports shall be made of galvanized steel, or shall have a corrosion-resistant phosphate coating and primer. Each box shall be provided with a grounding lug for connection to the nearest ground bus. The ground lug shall have the current capacity required by the National Electrical Code for the largest feeder entering the equipment.

F. Fittings:

1. Furnish cast-iron fittings of malleable iron or a mixture of gray iron and cast steel. Conduit fittings shall conform to ANSI Standard C80.4.

2. Supply fittings for electrical metallic tubing with UL Label. Do not use "sock" or "drive-on" fittings. Use fittings of set screw, compression, or permanent indentation types, which are galvanized and made of steel or malleable iron. Where indicated, use fittings which are watertight, with a sealing compression ring.

3. Furnish suitable expansion fittings where conduits cross expansion joints. Equip these fittings with grounding straps, clamps, and copper bonding jumpers.

4. Terminate ends of all floor conduits installed for future use with couplings and readily removable plugs set flush with finished floor surface. Cap spare wall conduits at wall where they enter building.

5. Equip ends of all conduits with suitable conduit fittings. Fit conduit terminating at motor control center or power distribution equipment, or in box above or below, with grounding type bushings, or solidly ground by locknuts or other acceptable fittings. Connect each grounding bushing to ground bus by a bare or green-covered copper wire. Do not use ground wire or smaller than 12 awg. Install sizes larger than 12 gauge as required by NEC. Where conduits terminate in unprotected areas or where bonding is required over expansion joint, flexible conduit or equivalent; ground wire smaller than No. 6 Awg. copper.

6. Terminate conduits entering gasketed sheet-metal boxes or gasketed sheet-metal equipment enclosures with gasketed hubs.

7. Terminate conduits entering non-gasketed sheet-metal boxes or enclosures with double locknuts and insulated bushings, or with acceptable equivalent.

PART 3 EXECUTION

3.01 INSTALLATION OF FITTINGS

A. Install expansion fittings wherever conduits cross structural expansion joints. Keep the fittings in line with conduit, and install with regard to temperature so that full working range of expansion is available.

B. Do not install fittings to replace elbows and pull boxes, unless space or other problems make use of fittings necessary. Use oversize fittings whenever large cable is installed, in order to maintain proper bending radius.

3.02 INSTALLATION OF RACEWAYS

A. Install exposed raceways parallel or at right angles to walls and ceiling beams Make all changes in directions as far as possible, with approved bends, elbows, and pull boxes. Space parallel runs uniformly throughout. Secure in place by approved hangers and approved fasteners. Effectively ground by connection to properly grounded enclosures, bonding, or other approved means, to obtain permanent low resistance path to ground throughout installation. Ensure that raceway sections in single run and in parallel runs are of same type and finish.

B. Support raceways concealed above suspended ceilings from slab above ceiling in same manner as exposed raceways. Do not support raceways from ceiling supports.

C. Use cast-in-place inserts in concrete to support-all runs, unless otherwise permitted. Use stainless steel sleeve type concrete anchors for installing boxes, conduit supports, etc. Furnish stainless steel nut, bolts, washers, etc. used with concrete-anchors.

D. Use bolts or machine screws on steel work. Support conduits by hangers or pipe straps spaced according to NEC, but in no case more than 10 feet on centers.

E. Use galvanized supports for galvanized conduit.

F. Install conduits in slabs as close to middle of concrete slabs as practicable without disturbing reinforcement. Do not use conduit with outside diameter exceeding one- third of slab thickness. Do not place conduits closer than three diameters on centers, except at cabinet locations where slab thickness is increased as permitted by Engineer.

G. Where conduits are concealed in bottom floor slab, place in concrete slab and not in fill below slab. Do not install aluminum conduit in concrete slab.

H. Use sleeves passing through exterior walls and slabs which are wall entrance seals of watertight construction. Furnish watertight seal between slab and sleeve, and between

sleeve and conduit and cable. Use wall-entrance seals of malleable iron with watertight sealing gland which may be tightened any time after installation.

I. Do not use dissimilar metals in conjunction with each other. Use suitable insulation between adjoining surfaces so as to eliminate direct contact and any resultant electrolysis. Maintain electrical continuity of system. Use bituminous impregnated felt, heavy bituminous coatings, nonmetallic separators or washers, or other acceptable materials as insulation.

J. Install fittings to match raceway being used.

3.03 BENDS

A. Make all bends carefully to prevent distortion of circular cross section. Field bend conduit to have an inside radius of not less than nine diameters.

B. Where bends of less than nine diameters are necessary, use standard factory elbows. Size conduit to permit cable-bending radius within the factory elbow of at least eight times cable diameter.

C. Use concentric bends in parallel runs. Allow no conduit to have more than two 90 degree bends or equivalent thereof between pulling points.

3.04 CUTTING, THREADING AND CONNECTING

A. Make all field cuts in raceways squarely, file cut ends, and remove burrs, and chamfer inside edge with conduit reamer. Install insulating bushing on each end of conduit or tubing, unless connector is designed to prevent contact with cut end. Make all connections mechanically strong and tight, and with acceptable connectors. Permit no running threads. Where surface coating is damaged or removed by cutting, threading or reaming restore to original condition.

3.05 CONDUIT CLEANING

A. Clean all conduit carefully before and after installation, ream ends free of burrs, and free inside surfaces from all imperfections likely to injure cable.

B. After installation of each complete new conduit run, snake the run with band to which is attached an acceptable tube cleaner with acceptable cylindrical mandrel of a diameter not less than, 85 percent of nominal diameter of conduit. Remove and replace all conduit through which mandrel will not pass.

C. Use a steel band and mandrel to clean steel conduit.

D. After cleaning, protect ends of all conduit with standard caps to prevent entrance of water, concrete, debris, or other foreign substance.

3.06 CONDUIT DRAINAGE

A. As far as practicable, pitch conduit to drain to outlet boxes, or install so as to avoid trapping moisture. Where dips are unavoidable in exposed conduits, install fitting with suitable drain hole at low point.

3.07 INSTALLATION OF BOXES

A. Install sheet metal boxes only in dry, accessible location. Do not install below grade, in outside concrete or masonry walls or in floor slabs subject to moisture. Sheet metal boxes cannot be used where vapor-tight fixtures are required for surface mounting of wall switches and receptacles or for any outdoor use.

B. Install boxes in conformity with all requirements of NEC. Install boxes designed for type of construction involved. Support boxes in same manner as required for conduit. Size boxes to provide bending radius for wire or cable of at least eight times diameter or in accordance with NEC, whichever is larger.

C. Center all outlets in panels, or spaces and adjust to structural finish. Where specific locations are not indicated, locate outlets with respect to equipment served.

D. Place all outlet boxes, junction boxes, pull boxes, etc., in accessible locations when they are installed above or behind plastered ceilings, furred spaces, or suspended ceilings. Install access panels of suitable size. Mark all access panels for all boxes so panels can be readily located in future. Mark, using metal tabs or plastic buttons which cannot mark ceilings or walls, appropriate for type of construction being used.

E. Assemble cast-metal boxes with threaded conduit hubs in such manner that conduit connections and gasketed covers are watertight. Close all unused threaded openings with pipe plugs and compound.

F. Provide cast boxes with cast covers and watertight gaskets. Install cover screws of stainless steel or high brass for iron boxes, and stainless steel for aluminum boxes.

3.08 MOTOR AND EQUIPMENT CONNECTIONS

A. At all motors and other electrically operated equipment to which conduit connections are required install complete connection between end of conduit and terminal box of motor or other equipment.

B. Terminate conduits extending up through floors in locations permitting direct connection to motors.

C. Make connections with flexible metal conduit.

D. Install flexible metal conduit, fittings, and accessories in accordance with requirements of NEC. Use flexible metal conduit only for connections to motors, or to other equipment

subject to vibration or adjustment. Make each connection with at least one quarter bend so that no vibration can be transmitted beyond flexible connection. Install visible bonding wire across flexible connection larger than 1-1/4-in. IPS size bonding wire in accordance with NEC; but in no case smaller than 6 awg. stranded.

E. Install liquid-tight flexible metal conduit, mechanically strong and watertight, and located to reduce possibility of damage to exterior coating. Use connectors that screw into flexible conduit and provide gaskets where needed.

3.09 HAZARDOUS AREAS

A. Install all conduits, fittings, equipment and devices within areas indicated to comply wit requirements of NEC for Hazardous Locations, Class, Division, and Group as indicated.

B. In such hazardous locations, seal conduits terminating at boxes enclosing circuit-opening equipment at entrance to enclosure with approved, compound-filled, commercial, sealing fittings to prevent passage of explosive or combustible gases through conduits.

C. Seal all conduits leading from or entering such hazardous locations at points of exit or entrance.

D. Install conduit connections with at least five threads tightly engaged, and made up with suitable thread compound.

END OF SECTION 260533.13

SECTION 26 05 43

UNDERGROUND DISTRIBUTION SYSTEM

PART 1 GENERAL

1.01 DESCRIPTION

A. Furnish and install complete underground distribution system as indicated and specified.

B. Adhere to lines, grades, elevations, arid dimensions. Resolve interferences with other underground conduit, piping or equipment, either new or existing with the Engineer. Match components suitable for proper installation.

C. Install concrete encasement of duct system where indicated. Include all necessary forms and reinforcing installation.

D. Furnish and install manholes and handholes complete with ground rods, windows, ladders, frames, covers, end bells, and other inserts. Use reinforced concrete:

1.02 REFERENCE STANDARDS

A. NEMA: National Electrical, Manufacturers Association, 2101 L Street, Northwest, Washington, D.C.

B. ANSI C2: National Electrical Safety Code Published by Institute of Electrical and Electronics Engineers, Inc., 345 East 47th Street, New York, NY 10017.

C. NFPA-70: National Electric Code, Published by National Fire Protection Association, Battery March Park Quincy, MA 02269.

1.03 SUBMITTALS

A. Submit shop drawings and manufacturers' product data in accordance with requirements of Section 01000.

PART 2 PRODUCTS

2.01 ACCEPTABLE MANUFACTURERS

A. Polyvinylchloride (PVC) Conduit

1. Triangle Conduit & Cable Co., Inc. New Brunswick, NJ.

2. Republic Steel Corp., Cleveland, OH.

3. Carlon, Inc., Cleveland, OH.

B. Rigid Steel Conduit, Galvanized

1. Section 16110

C. Fiber, Conduit, Type I

1. Ashland Chemical Co., Columbus, OH.

2. Bermico Co., W. Bend, WI.

D. Manhole Waterproofing Material,

1. Heavy Duty Black, No. 46-449, by Tnemec Company, Inc., No. Kansas City, MO.

2. Hi-Build Bituminous CJoating, No, 35-J-10, by Mobil Chemical Company, Edison, NJ.

3. Bitumastic Super Service Black, by Koppers Company, Inc., Pittsburgh, PA.

4. Acceptable equivalent.

E. Conduit Spacers: Furnish conduit spacers made of plastic to maintain spacing of 3-in. (76 mm) between conduits and 6-in. (150 mm) between power and communication conduits as indicated.

F. Concrete: Minimum compressive strength, 3,000 psi (210 kg per square centimeter).

G. Hot-dipped galvanized steel conduit painted with bituminous paint.

PART 3 EXECUTION

3.01 INSTALLATION OF CONDUITS

A. Lay conduits, indicated to be direct buried in the ground, in trench on 4-in. (100 mm) bed of sand and cover with, an equivalent 4-in. (100 mm) bed of sand. Ensure that no rocks come in contact with conduit during backfilling. Dig trenches to depth and location indicated. Do not allow top of ductbank to be less than 2-ft. (0.61 m) below finished grade.

B. Install conduit, indicated to be encased in concrete with concrete, spacers, reinforcing, etc., as specified and as indicated.

C. Install conduit runs following routing on drawing and running in straight lines as far as possible. Where deviation from a straight line becomes necessary, install bends of sufficient radius for proper rodding and installation of cable.

D. Accomplish changes in direction of runs exceeding total of 10 degrees, either vertical or horizontal, by long seep bends having minimum radius of curvature of 25 ft. (7.62 mm),

except that manufactured bends used at ends of short runs of 100-ft. (30.48 m) or less, and then only at or close to end of run. Long sweep bends made up of one or more curved or straight sections and/or combinations thereof. Install manufactured bends with minimum radius of 36-in. (915 mm) where larger radius cannot be used.

E. Lay duct lines to minimum slope of 4 inches (100 mm) per 100-ft. (30.48 m) and slope to manholes and handholes as indicated. Duct lines are to slope away from buildings where possible.

F. Prior to placing of concrete remove all dirt, sand, and any other debris from between conduits and from trench bottoms. Hold conduits in place to prevent floating or accidental movement.

G. Stagger joints in conduits at least 6-in. (150 mm). Do not allow couplings to rest on bottom of trench. Install couplings for plastic conduit in accordance with manufacturer's recommendations.

H. Install concrete encasements so minimum clearance of 12-in. (300 mm) from concrete to parallel pipes, lines, structures, etc., is maintained. Where ducts cross, minimum clearance of 6 inches (150 mm) will be acceptable. Do not allow the top of concrete to be less than 36-in. (915 mm) below finished grade or paving. Submit special conditions which may require lesser clearances to Engineer for approval.

I. Where a connection is made to existing ductline, firmly bond or dowel concrete encasement to existing encasement.

J. Do not use power-driven vibrators for spading of concrete around ducts.

K. Roll and grade backfill, and restore surface to condition at least equal to which it was found immediately before work was begun, or as otherwise indicated.

L. Locate duct-bank markers at ends of all duct banks except at manholes or handholes, at approximately every 2,000 ft. (61.0 m) along duct run, and at each change in direction of duct run. Place markers approximately on duct bank. Install markers 6-in. (150 mm) square or round section by 3 ft. (0.91 m) long made of Class B concrete. Imprint the letter "D" or cast it on top of the marker. Install top of duct arkers flush in paved areas, protruding no more 2-in. (50 mm) above finished grade in paved areas. In finished lawns, allow marker to pr1trude 1/2-in. (12.7 mm).

M. Keep conduits clean of concrete, dirt, and other substances during the course of construction. After the duct lines have been completed, pull a standard flexible mandrel not less than 12-in. (300 mm) long, having a diameter approximately 1/4-in. (6 mm) less than the inside diameter of the conduit, through each conduit, after which pull a brush with stiff bristles through each conduit to make certain that no particles of earth, sand, or gravel have been left in the line. Replace conduit runs that do not allow the passage of the mandrel at no additional cost to the Owner. Pneumatic rodding may be used to draw in the lead wire. Plug and seal spare conduits after cleaning.

N. Where electrical ducts cross under roads, encase them in reinforced concrete.

3.02 MANHOLES AND HANDHOLES

A. Construct manholes and handholes of Class A concrete cast in place or of precast-concrete sections, as indicated.

B. Install manholes with cable racks, hooks, insulators, and other features, as indicated.

C. Place a 6-in. (150 mm) crushed-stone base under each manhole and handhole.

D. Construct cast-in-place manholes and handholes with forms, complete with centering cores and molds, to conform to shape, form, line, and grade required and maintain sufficiently rigid to prevent deformation under load. Make all joints leakproof and arrange horizontally or vertically. Place forms on successive units for continuous surfaces and fit to accurate alignment, assuring a smooth completed surface, free from irregularities.

E. At convenient point close to wall, drive 3/4-in. by 10 ft. -0 long copper-clad steel ground rod into earth as indicated. Extend ground rod approximately 5-in (150 mm) above finished manhole floor. After completion of manhole, connect 6 foot (1.83 m) length of No. 4 bare copper ground wire to ground rod and coil it within manhole or handhole.

F. Size space, and place reinforcing bars as indicated and as specified.

G. Set manhole and handhole frames to the required grade, in full bed of concrete mortar to make watertight connection.

H. Unless otherwise indicated, install tops of manhole and handhole covers in unpaved areas approximately 1/2-in. (13 mm) above finished grade, and in paved areas install flush with finished surface of paving.

I. Install galvanized corrosion-resistant channel support, with continuous slot and required fittings designed for concrete encasement.

J. Install inserts in the manholes as indicated.

K. Install two cable pulling irons in wall opposite each duct bank entrance into manhole, one 6-in. (150 mm) above floor and one 6-in. (150 mm) below the roof of manhole. Where indicated on drawings, install additional features such as openings in manhole walls for future conduit entrances. Seal future entrance with required courses of brick.

L. Where duct lines enter manholes, terminate conduits in end bells. Terminate steel conduit entering manholes and handholes in grounding bushing.

3.03 MANHOLE AND HANDHOLE WATERPROOFING

A. Apply two coates of bituminous waterproofing material to exterior surfaces of manholes and handholes. Apply by brush or spray, in accordance with manufacturer's instructions. Allow time between coats to permit sufficient drying.

B. As-Built Drawings of Underground Work: Furnish one set of marked copies of contract drawings, showing exact routing and depths of all underground conduit, duct handholes and manholes. Furnish scaled plot plans, showing principal outline of buildings and structures. Reference conduits, ducts, and manholes, and all bends deviating from straight line, dimensionally from fixed objects, or structures.

END OF SECTION 26 05 43

SECTION 26 08 00

FIELD ACCEPTANCE TESTS

PART 1 GENERAL

1.01 DESCRIPTION

A. After electrical installation is complete, make tests to demonstrate that entire system is in proper working order and in accordance with drawings and specifications. Make no tests less than those outlined hereafter, unless requested in writing and approved by Program Manager. Tests are in addition to, and no substitution for, tests of individual items at manufacturer's plant. Make insulation and ground resistance tests before operating tests. Determine proper rotation of motors before permanent connections are made.

B. Pay all costs for tests including expenses incident to retests occasioned by defects and failures of equipment to meet specifications.

1. Replace wiring and equipment found defective, or failing to meet specified requirements, without charge.

2. Furnish three copies of all test results to Engineer.

3. Unless otherwise specified Owner will supply electric current necessary for tests.

1.02 REFERENCE STANDARDS

A. NEMA: National Electrical Manufacturers Association, 2101L Street, Northwest, Washington, D.C.

B. IEEE: Institute of Electrical and Electronic Engineers, 345 East 47th Street, New York, NY.

PART 2 PRODUCTS

2.01 TESTING EQUIPMENT

A. Calibration:

1. Furnish suitable electrical instruments including voltmeters, ammeters, wattmeters, tachometers and all other equipment necessary to perform tests specified. Furnish certified copies of calibration curves of these instruments which have been calibrated for specific tests.

2. Make necessary openings in circuits for testing instruments and place and connect all instruments, equipment, and devices, necessary for the tests. Upon completion of tests, remove instruments and instrument connections and restore all circuits to permanent condition.

3. Other sections of specifications require services of one or –more manufacturer's representatives, to ensure that equipment supplied has been installed properly and adjusted to proper working order. Advise representative of all applicable tests in this section, so that work will be coordinated, and tests combined where feasible.

2.02 TESTING

A. Coordination:

1. Coordinate activities, and cooperate with others on project to ensure that systems are energized when required, loads applied, and other requirements of Section are carried out on timely coordinated basis.

2. Conduct tests in presence of Engineer. Notify Engineer seven calendar days or more in advance when any test to be performed, and do not start tests without Engineer's permission.

B. Preparation:

1. Make up no high and/or medium-voltage connections at service entrance, transformers, substations, motors, medium voltage motor control centers, switchgear and generator permanently until correct phase rotation of all equipment is determined.

Install and insulate these connections temporarily, if necessary, while determining proper rotation. Have permanent connections after proper rotation has been established and subsequent to completion of insulation resistance and dielectric tests.

PART 3 INSULATION

3.01 INSULATION RESISTANCE TESTS OF CIRCUITS, 600 VOLTS AND BELOW

A. Do not subject conductors rated 600 volts and below to high potential dielectric tests. Test each complete feeder and branch circuit of 6000 volts or below with everything but power supply and power-consuming equipment, connected thereto, and have an insulation resistance, between conductors and between each conductor and ground of not less than 1,000,000 ohms, unless otherwise accepted y Engineer.

B. Determine insulation resistance values with all switchboards, panelboards, fuseholders, switches, receptacles, and overcurrent devices in place.

C. Use megohmeter having output of at least 500 volts to determine insulation resistance value for 600 volt rated conductors, and a 2400 volt megohmeter for 5 KV and 15 KV rated conductors.

D. List each circuit and measured resistance as test data.

E. Maintain record of all insulation resistance valued. Identify conductor, or equipment, date that value was taken and resistance value. Arrange information in suitable neat tabular form and turn to Engineer in triplicate

3.02 DIELECTRIC TESTS OF CONDUCTORS RATED 2400 VOLTS AND ABOVE

A. After all high and/or medium-voltage conductors are installed, and before connecting and putting into service, subject to dielectric tests. Perform direct current, high-potential tests form phase to phase and from phase to ground. Make tests as specified in latest edition of the applicable IPCEA-NEMA Standard.

B. Complete and enclose splices in conductor system being tested within all pull, junction or splice boxes before test is started, and complete all potheads and switchgear terminations. Disconnect potential transformers and all power consuming equipment or devices from circuit, if any are present.

3.03 GROUND RESISTANCE

A. Test each ground rod in accordance with IEEE Std. 142, and submit tabulation of results. Include identification of electrode, date of reading and ground resistance value in results.

B. Test each entire grounding system for continuity of connections and for resistance. Ensure that ground resistance of conduits, equipment cases, and supporting frames does not vary appreciably from that of system as whole and does not exceed 5 Ohms.

END OF SECTION 26 08 00

SECTION 26 24 16

PANELBOARDS

PART 1 GENERAL

1.01 DESCRIPTION

A. Furnish and install panelboards including circuit breakers and cabinets complete, in conformance with the latest NEMA Standards and Federal Specifications listed below.

1.02 REFERENCE STANDARDS

A. NEMA: National Electrical Manufacturers Association, 2101 L Street Northwest, Washington, .D.C.

1. PB1-1971 & AB1-1975

B. NEC: National Electrical Code, National Fire Protection Association, 470 Atlantic Avenue, Boston, MA.

C. UL: Underwriter's Laboratories, Inc., 333 Pfingsten Road, Northbrook, IL.

1. UL 67- 74 (Revise 1976) - Panelboards.

PART 2 PRODUCTS

2.01 PANELBOARD MANUFACTURERS

A. Manufacturers acceptable contingent upon products' compliance with the specifications:

1. General Electric Company, 1 River, Road Schenectady, NY.

2. Westinghouse Electric Corp., Distribution Equipment Division, 1945 Craig Road, St. Louis, MO.

3. Square D Company, Park Ridge, IL.

2.02 PANELBOARDS

A. Factory assembled deadfront type panelboards.

B. Furnish panelboards complete with branch circuit breakers and a main circuit breaker of main lugs only as indicated.

C. Furnish panelboards with full capacity separate ground bus and furnish panelboards connected to a 3-phase, 4-wire service with an insulated neutral bus.

D. Provide panelboards with the voltage, frequency and current ratings as indicated conforming to NEMA Standard PB1, Federal Specification W-P-115A. U.L. 67, and the N.E.C.

E. Furnish panelboards with main and neutral buses, with minimum 98 percent conductivity rectangular copper bars provided with bolted type lugs as necessary.

F. Drill buses to fit either "A","B" or "C" Phase connectors, and ensure that connectors are interchangeable and installed in a distributed phase sequence.

G. Silver plate buses, connectors and terminals to a minimum thickness of 0.005-in., conforming to the requirements of Federal Spec. QQ-S-365B.

H. Prevent Terminal Lugs from turning per NEMA standard PBI- 1971 and ensure they are suitable for the conductor material and size.

I. Main bus-bracing for each panel board shall be for 10,000 amperes symmetrical short circuit or as otherwise indicated.

2.03 CIRCUIT BREAKERS

A. Furnish bolt-on type branch and main circuit breakers. Furnish frame sizes, trip settings and number of poles as indicated. Circuit breakers shall have their ampere trip rating clearly marked and visible.

B. Furnish all breakers with quick-make, quick-break, toggle mechanisms and thermal-magnetic, inverse time-limit overload and instantaneous short circuit protection on all poles, unless otherwise indicated. Automatic tripping shall be indicated by the breaker handle assuming a clearly distinctive position from the manual ON and OFF position. Furnish breaker handle that is trip-free on overloads.

C. Do not use single pole breakers with handle ties or bails in lieu of multipole breakers.

D. Furnish handle lock device on breakers as indicated to prevent the manual opening of the selected breakers.

E. Furnish padlocking device on breakers as indicated to prevent the opening of indicated breakers.

F. Ensure that voltage and interrupting rating of all breakers in a panelboard is not less than voltage and short circuit rating of the panelboard main buses, as indicated. Furnish breakers suitable to operate satisfactorily at the frequency indicated.

G. Furnish ground fault interrupter circuit breakers for certain circuits as indicated on the drawings.

H. Furnish single pole breakers with full module size. Do not install two pole breakers in a single module.

I. Furnish Time-current characteristics curves and other necessary information and data for each size of breaker furnished.

J. Ensure that branch and main circuit breakers rated 120 and 240 volts have an interrupting rating of not less than 10,000 rms amperes, symmetrical, at rated voltage.

2.04 CABINETS

A. Cabinets shall be NEMA 1 type, unless otherwise indicate and shall be without knockouts. Drill cabinets only for the exact conduit entrances and mounting bolts.

B. Finish cabinet fronts, trims and surface-mounted boxes in ANSI NO. 61, light-gray enamel over a rust-inhibitive primer. Attach the fronts (exterior trims) to the boxes or interior trims, by quarter-turn, indicating trim clamps: Design cabinets for surface or flush mounting as indicated.

C. Unless otherwise specified, construct panelboard cabinets of code-gauge galvanized, sheet steel and equip with gutters of ample size for the risers and outgoing circuits. Ensure that the cabinets do not exceed 78-in. (1980 mm) in height.

PART 3 EXECUTION

3.01 INSTALLATION

A. Mount all panelboards such that the height of the top operating handle does to exceed 6 ft. 6-in. (1980 mm) from the floor.

B. Hang each door of the cabinet on semi- or fully-concealed hinges with a combination catch and lock.

C. On cabinets 48 in. (1200 mm) high and over, install a 3 approximate middle.

D. All Panelboard locks shall be keyed alike.

END OF SECTION 26 24 16

SECTION 26 27 26

WIRING DEVICES

PART 1 GENERAL

1.01 DESCRIPTION

A. Furnish, install, field test, and place in successful operating condition, wiring devices as indicated and as specified.

1.02 REFERENCE STANDARDS

A. NEMA: National Electrical Manufacturers Association, 2102 L Street Northwest, Washington, D.C.

B. Federal Specifications, Superintendent of Documents, U.S. Government Printing Office Washington, D.C. 20402.

1. W-S-896c(1) Switch, Toggle, Single Unit with wall plates.

2. W-C-596,b(1) Plug, Electrical Connector, Receptacle, Electrical.

C. Underwriters' Laboratories, Incorporated Standards.

PART 2 PRODUCTS

2.01 MANUFACTURERS

A. Arrow-Hart, Inc., Florence, KY.

B. Allen-Bradley Co., Milwaukee; WI.

C. Appleton Electric Co., Chicago, IL.

D. Bryant Electric, Div. of Westinghouse, Bridgeport, CT.

E. Cutler Hammer, Inc., Milwaukee, WI.

F. Crouse-Hinds Co., Syracuse, NY.

G. Harvey Hubbell, Inc., Bridgeport, CT.

H. Midland-Ross Corp., - Electrical Products Div., Pittsburgh, PA.

I. Sierra Electric, Div. of Sola Basic, inc. Gardena, CA.

2.02 WALL SWITCHES

A. Provide alternating current, general-use, snap switches, in flush device boxes or on outlet box covers, totally enclosed in composition case, with insulated mounting yoke and sidewired, binding screw type terminals. Single-pole, 2-pole, 3-way, or 4-way switches rated 20 amperes at 120/277 volts a.c.

B. Switches for controlling lighting:

1. Arrow-Hart Cat. No. 1991, 1992 or 1994
2. Harvey Hubbell Cat. No. 1221, 1222, 1223 or 1224
3. Bryant Electric Cat. No. 4901, 4902, 4903 or 4904
4. Sierra Electric Cat. No. 5721X, 5722X, 5723X or 5724X

C. Provide pilot lights for switches controlling lights in seldom frequented locations Consisting of either separate units or a 2-unit combination with separate switch and yoke-mounted candelabra base socket rated 75 watts, 125 volts, and fitted with a ruby lens. Provide a clear 6 or 7-watt lamp with each pilot.

2.03 WATERTIGHT SWITCHES

A. Provide watertight switches consisting of flush mounting switches in NEMA Type 4 gasketed cast metal boxes. Switch operable through shaft in matching cast metal cover, twenty-ampere, 120/277-volt switch enclosures:

1. Crouse-Hinds Type MC or MCC
2. Allen-Bradley Cat. No. 600-TCX-4
3. Cutler-Hammer Cat. No. 91-1 H 96

2.04 EXPLOSIONPROOF SWITCHES

A. Provide explosionproof switches consisting of flush mounting switches in cast metal boxes meeting requirements for NEMA Type 7D enclosure approved for use in National Electric Code Class I, Group D, Div. l, atmosphere. Switch operable through shaft in matching cast metal cover. 20-ampere, 120/277-volt switch assemblies:

1. Crouse-Hinds Type EFS
2. Midland-Ross Type EFS

3. Appleton Electric Type EFS

2.05 FLUSH RECEPTACLES

A. Provide twenty-ampere, 125-volt flush receptacles constructed in flush device boxes, and of grounding type in composition case with insulated mounting yoke, side-wired, binding screw-type terminals.

B. Duplex receptacles:

1. Arrow-Hart Cat. No. 5739-S
2. Harvey Hubbell Cat. No. 5362
3. Bryant Electric Cat. No. 5362
4. Sierra Electric Cat. No. 14602

C. Single receptacles:

1. Arrow-Hart Cat. No. 5361
2. Harvey Hubbe 1 Cat. No. 5361
3. Bryant Electric Cat. No. 5361
4. Sierra Electric Cat. No. 12605

2.06 CLOCK RECEPTACLES

A. Provide 3-wire, 15-ampere, 125-volt hanger receptacle with flush stainless steel plate for each clock:

1. Arrow-Hart Cat. No. 5708
2. Harvey Hubbell Cat. No. 5235
3. Bryant Electric Cat. No. 2828GS
4. Sierra Electric Cat. No. 2123

2.07 SPECIAL RECEPTACLES

A. Provide weatherproof devices rated 20 ampere, 125-volt, consisting of single receptacles with spring-loaded, soft-gasketed hinged covers with stainless steel spring.

Covers as follows:

1. Arrow-Hart Cat. No. 4500FS
2. Harvey Hubbell Cat. No. 5206
3. Bryant Electric Cat. No. 4510

B. Provide watertight, gasketed cast-metal enclosures with covers in areas subject to hose-down, meeting requirements, and either standard single or duplex type:
1. Appleton Electric Cat. No. AEE3382 and AEP3361, Style 2.
2. Crouse-Hinds Cat. No. ARRH3322 and APJ3385, Style 2.
3. Midland-Ross Cat. No. 3313 and 3317, Type SCA.

C. Provide receptacles with matching plug or cord cap designed to meet NEMA 4 requirements when plug, cord and receptacle are assembled.

D. Provide explosionproof 20-ampere receptacles, of the delayed action type, preventing contact from being broken until arc has been extinguished. Receptacles with angle covers and pring-closed flaps:

1. Crouse-Hinds Type CPS
2. Appleton Electric Type CPS
3. Midland-Ross Type EFS

E. Furnish one explosion proof plug for each three receptacles, with minimum of one, plugs to match receptacles and from same manufacturer:

F. Provide welding receptacles whereby plug ground contact makes contact with receptacle ground contact before current carrying contacts engage, and when withdrawing plug, ground contact remains engaged until after current carrying ground contacts disengage.

2.08 OUTLET BOXES AND ENCLOSURES

A. Provide outlet boxes and enclosures conforming to Section 16110, Electrical Raceway Systems unless otherwise indicated.

2.09 DEVICE PLATES

A. Provide device plates suitable for type of outlet boxes and enclosures used. Plates for flush-mounting by device manufacturer. Plates for surface-mounting boxes by either device manufacturer or box manufacturer.

B. Provide flush device plates of high corrosion resistant, Type 302 stainless steel. Provide plates of 93,000 series thickness, not less than 0.030 in.

C. Provide flush device plates with security (vandal proof) throughout.

D. Provide five (5) security screws screwdrivers at end of job to Owner.

2.10 NAMEPLATES

A. Provide nameplates or equivalent markings on switch enclosures to indicate ON and OFF positions of each switch. Do not use ON and OFF for 3-way or 4-way switches. Receptacles for special purpose shall hare nameplates indicating. their use, unless use is obvious. Nameplates shall otherwise conform to requirements specified under Section 16050.

PART 3 EXECUTION

3.01 CONNECTION

A. Securely and rigidly attach wiring devices in accordance with regulating agency, and as indicated, avoiding interference with other equipment.

B. Securely fasten nameplates using screws, bolts, or rivets and centered under or on the device, unless otherwise indicated.

3.02 GROUNDING

A. Ground all devices.

B. Ground switches and their metal plates through switch mounting yoke, outlet box, and raceway system.

C. Ground flush receptacles and their metal plates through positive ground connection to outlet box and grounding system. Maintain ground to each receptacle by spring loaded grounding contact to mounting screw, or by grounding jumper, both making positive connection to outlet box and grounding system at all times.

D. Ground explosionproof receptacles and plugs by making contract between the metal shells, and also by using a grounding pin to make contact before power contacts are made.

END OF SECTION 26 27 26

SECTION 26 51 00

LIGHTING

PART 1 GENERAL

1.01 DESCRIPTION

A. Furnish and install complete indoor lighting systems.

1.02 REFERENCE STANDARDS

A. Underwriters' Laboratories, Inc., 333 Pfingsten Road, Northbrook, IL.

B. National Fire Protection Association, Battery March Park, Quincy, MA, 02269 NFPA 70 1981, National Electrical Code.

C. Federal Specifications and Standards Superintendent of Documents U.S. Government Printing Office, Washington, D.C., 20402.

1. W-L-101(5) Lamp, Incandescent, (Electric, large, Tungsten Filament)

2. W-L-001166 Lamps, Fluorescent

3. W-L-142a Lampholder, adaptor, and shadeholder, medium screw-shell, 125, 250, and 600 volts.

D. American National Standards Institute:

1. Fluorescent Lamp Ballasts, ANSI C82, 1-1972 and Supplement C82.la.

2. High Intensity Discharge Lamp Reference Ballasts, ANSI C82.5-1975.

3. Mercury Lamp Ballasts, (Multiple Supply Type), ANSI C82.4-1974.

4. Electric Lamp Bases and Holders, Fluorescent Types, ANSI C81.20-1976.

5. Electric Lamp Bases and Holders, Screw-Shell Types, ANSI C81.10-1976.

1. 03 SUBMITTALS

A. Submit manufactures installation instructions in accordance with General Specifications.

B. Submit manufacturer's shop drawings including photometric data to show that fixtures proposed are of same type, construction and quality as those indicated. Lighting fixtures listed and labeled by Underwriters, Laboratories.

PART 2 PRODUCTS

2.01 MANUFACTURERS

A. Lighting equipment as indicated or specified.

2.02 LAMPS

A. Furnish lamps of types and wattages shown in fixture schedule.

B. Unless otherwise indicated, furnish fluorescent lamps suitable for 12-volt operation. Type: Rapid start, standard cool white, 48-in. long, 34 watt.

2.03 BALLASTS

A. Furnish high power factor type ballasts for fluorescent lamps. Ballasts are required to operate one, two, or four lamps as required by fixture schedule.

B. Ballast sound rating: "A"

C. Furnish ballasts class "p" type or equivalent protection, containing a nonrenewable, nonresetting thermal protector; designed for applicable indoor or outdoor use; conforming to UL standard 935.

D. Furnish ballasts with certified ballasts manufacturer (CBM) label.

E. Furnish ballasts with power factor not. less than 95 percent.

F. Furnish constant wattage (regulator) type ballasts for mercury vapor and metal halide lamps.

G. Ballasts: In non-air conditioned spaces, rate for operation in 40-deg. C temperature environment.

H. Furnish mercury vapor and other H.I.D. ballasts suitable for 120-volt, 277-volt or 480-volt operation as indicated.

2.04 FIXTURES

A. Furnish fixtures complete with lamps of wattage indicated.

B. Furnish each fluorescent fixture with ballasts of proper type and characteristics for lamps in fixture and with voltage rating as required by circuit in which fixture is connected.

2.05 EMERGENCY LIGHTING AND EXIT LIGHTING FIXTURES

Furnish types of fixtures shown in fixture schedule.

PART 3 EXECUTION

3.01 LIGHTING FIXTURES AND LAMPS

A. Install types and sizes indicated, complete. Deliver lamps of proper type, wattage and voltage rating to site and install in fixture prior to completion of project.

B. Install all fixtures to comply with applicable provisions of National Electrical Code. Suspend pendant fixtures by means of suitable. outlet box covertype aligners, each having flexible joint permitting unit to hang plumb. Install stems of 1/2-in. galvanized steel conduits, unless otherwise specified.

C. Use aligners of shock absorbing type, where, indicated.

D. Use vaportight aligners with vaportight fixtures.

E. Install each explosion-proof pendant fixture having stem longer than 12-in. (305 mm), with explosion-proof swivel or flexible fitting permitting fixture to hang plumb. Fixtures with stems shorter than 12-in. (305 mm) aligned by level outlet box mounting, explosion-proof swivels, or other-acceptable means:

F. Install recessed fluorescent fixtures in suspended ceiling openings in conformance with manufacturer's recommendations. Install fixtures with adjustable fittings to permit alignment with ceiling panels. install fixtures in fire-resistive type of suspended ceiling construction, equipped with fireproofing boxes constructed of materials of same fire rating as ceiling panels. Materials in conformance with UL approved building materials list.

G. Install accessories such as straps, mounting plates, nipples or brackets necessary for proper installation.

H. Connect emergency light fixtures to separate unswitched circuit in lighting panelboard in a lighting circuit breaker locked in closed position.

END OF SECTION 26 51 00