HYDRAULIC – FREIGHT ELEVATOR UPGRADE MODERNIZATION

Scope of work: Modernization of one (1) freight elevator conforming to all aspects of regulations standards and codes.

Manufacturers Data Sheets

1. Datasheet-iLEARN CURION CONTROLLER
2. Door Protection By Curion
3. EECO Oil line Components
4. EECO Power Unit Catalog
5. ELPRO Roller Guides 33SRG
6. iLearn-System-Manual CURION
7. Installation—Light-Curtain-CURION
8. MAD Communication System A17.1-2019
9. MAD Fixture Catalog
10. Maxton OVERSPEED VALVE
11. Pixel-Hydraulic-Instalation-and-adjustment
12. Quality Power Unit
13. Stancor oilminder
14. WiringSchematic-iLEARN-CURION
15. ZZIPCO Oil Cooler-iLEARN CURION CONTROLLER

Door Protection By Curion

The "Next Generation"

The Next Generation of Freight Elevator Doors

iLEARN
Door Control

Don't let the small size fool you - this is the smartest Freight Elevator Door Control available in today's market.

SMALL **-** COURION's iLEARN Door Control measures 5" x 8" x 2". Because of its small size, the iLEARN Door Control can be mounted inside most Elevator Control cabinets.

SELF-ADJUSTING - The iLEARN Door Control automatically adjusts your hoistway doors and car gate. From the initial setup to the ongoing operation of your equipment, the iLEARN Door Control makes adjustments to ensure the smooth and quiet performance of your Courion equipment.

CLOSED LOOP - The iLEARN Door Control continually monitors the position of the hoistway doors and car gates without the use of yo-yo string pots or other mechanical devices.

MEMORY - The iLEARN Door Control collects and records door and car gate operational data. This information can be viewed by the field mechanic on the i-LEARN Control's display or can be downloaded via the integrated USB port.



Courion Part Number 90-715000

3044 Lambdin Ave.
St. Louis, Missouri 63115
1-800-533-5760 1-314-533-5700
1-314-533-5720 (fax)
e-mail: sales@couriondoors.com

The "Next Generation"

The Next Generation of Freight Elevator Doors

iLEARN Door Control

SPECIFICATIONS	
Input Voltage	120 VAC
Communication	CAN bus operating at 125kbps (master-slave design)
Elevator Control Inter-connection Inputs	Retiring Cam, Inspection, Auto Open (front), Auto Open (rear), Hall Push Button, Auto Time Close, Fire Service Recall, Fire Service Recall Landing, Fire Service Phase 2, Fire Service Phase 2 Hold
Elevator Control Relay Outputs	Auxiliary Door Closed (front), Auxiliary Door Closed (rear), Door Not Closed, Door Not Open
Enclosure Rating	NEMA 1, 4, 12 and 13 (dust, oil, and moisture resistant)
Operating Temperature	-10º to 60º C

Compare For Yourself	COURION	EMS	Peelle
Freight Door System automatic sets-up and adjust at start-up	YES	NO	NO
Collects and records operational data	YES	NO	NO
Provides instant feedback via LED indicator lights	YES	NO	NO
Closed Loop system that utilizes solid-state advanced hall-effect technology	YES	NO	NO
No moving parts and immune to dust, oil, grease, dirt, mud, and water	YES	NO	NO
Hoistway wiring consists of single serial CANbus communication cable	YES	NO	NO
Complete wiring package offered to customers at NO ADDITIONAL CHARGE	YES	NO	NO
Variable frequency drive motor control at each floor	YES	NO	NO
Additional Cost to You or Your Customer	$0.00		

Expect the best! Demand COURION's *"Next Generation"*

COURION The Next Generation

3044 Lambdin Ave.
St. Louis, Missouri 63115
1-800-533-5760 1-314-533-5700
1-314-533-5720 (fax)
e-mail: sales@couriondoors.com

EECO Oil line Components

COURION
The Next Generation

THE NEXT GENERATION OF FREIGHT ELEVATOR DOORS



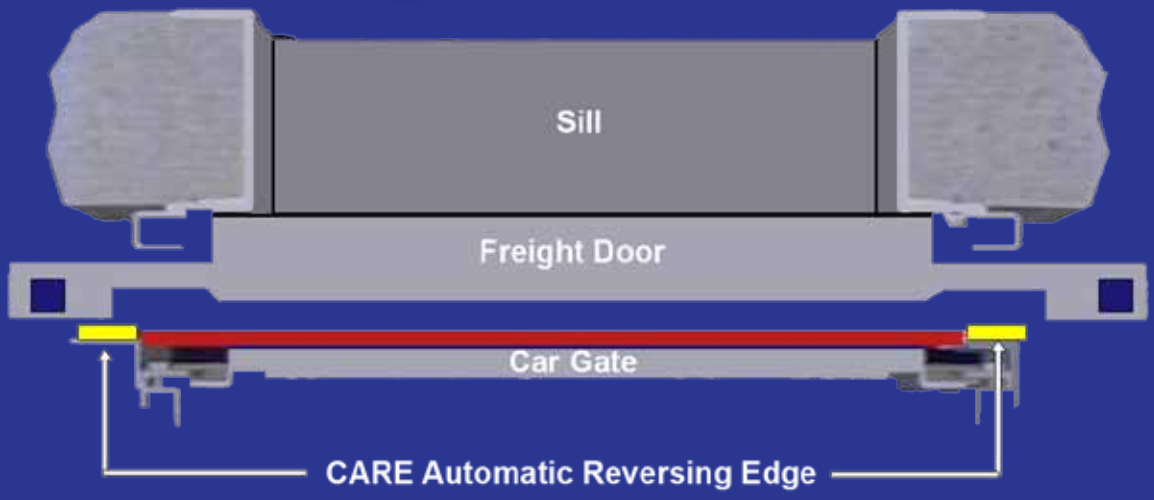

CARE-C Light Curtain
Installation Instructions

www.couriondoors.com

❶ *Install Mounting Brackets*

If your Gate Guides do **NOT** have CARE C Mounting Brackets, please install utilizing one of these two options: (1) Tack weld the CARE Mounting Bracket to the Gate Guides, or (2) Drill 17/64” holes thru the Gate Guides and attach with the mounting hardware provided by Courion.



Distance From Car Floor
1” (25mm)
(Q Guides Shown)

Distance From Face of Gate Guide as Shown on Following Plan Views	
Single Section Q-Style (shown)	1-1/8” (29mm)
2-Section Q-Style	1-5/8” (41mm)
Single Section Angle Guide	2-1/4” (57mm)
2-Section Angle Guide	1-5/16” (31mm)

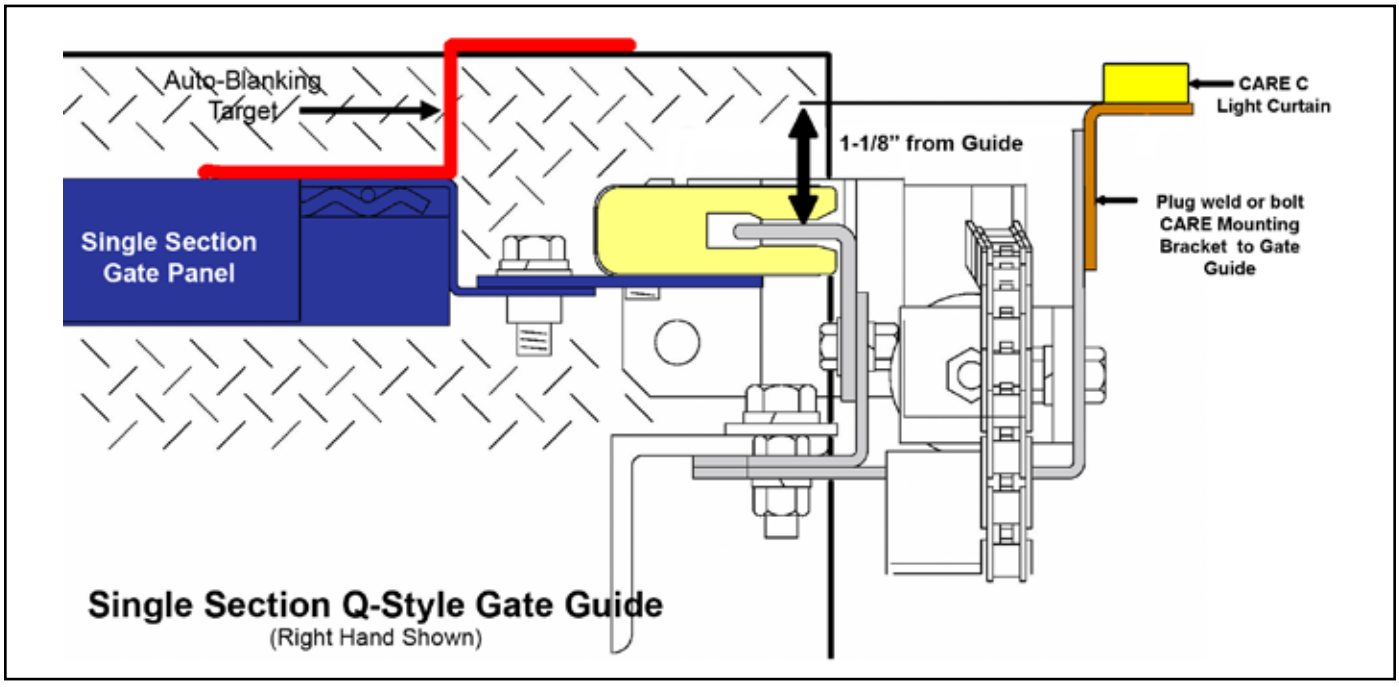

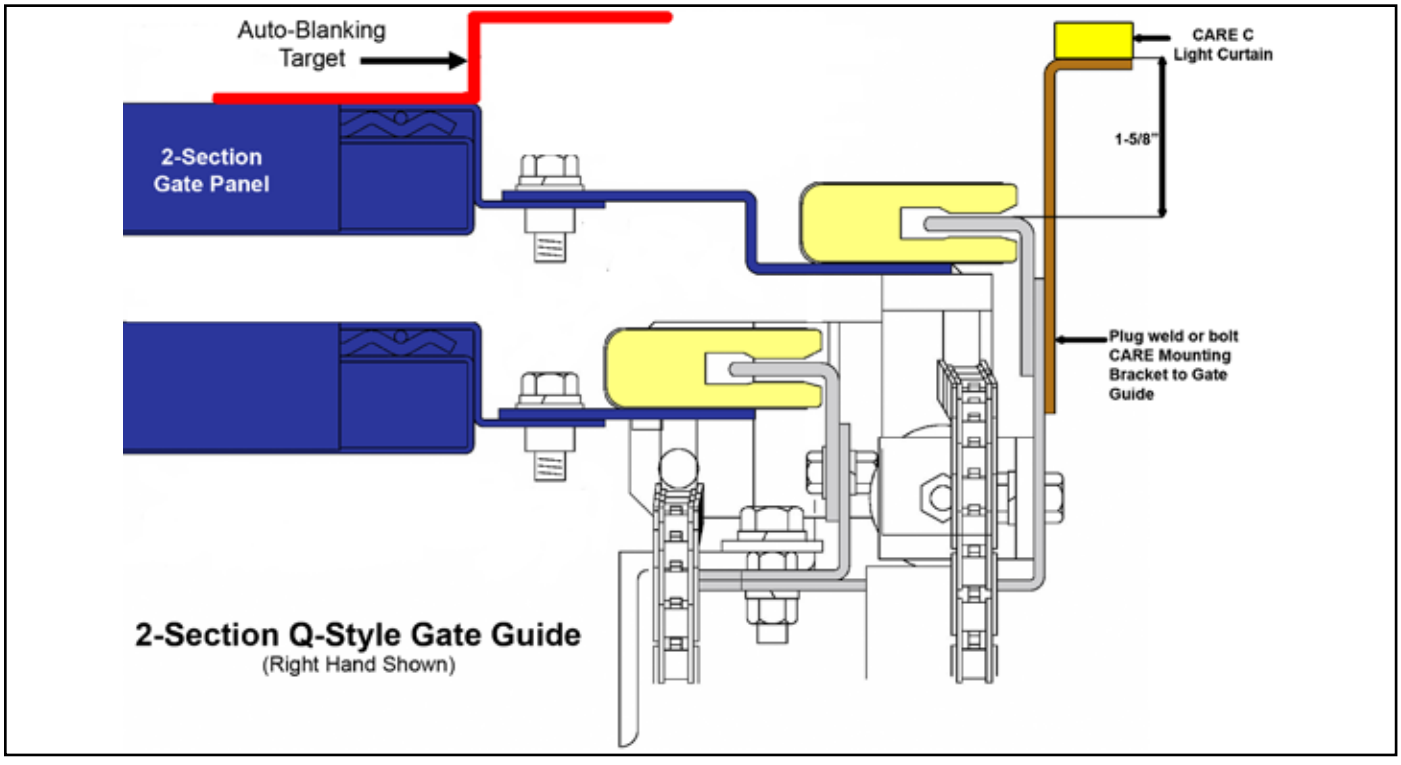

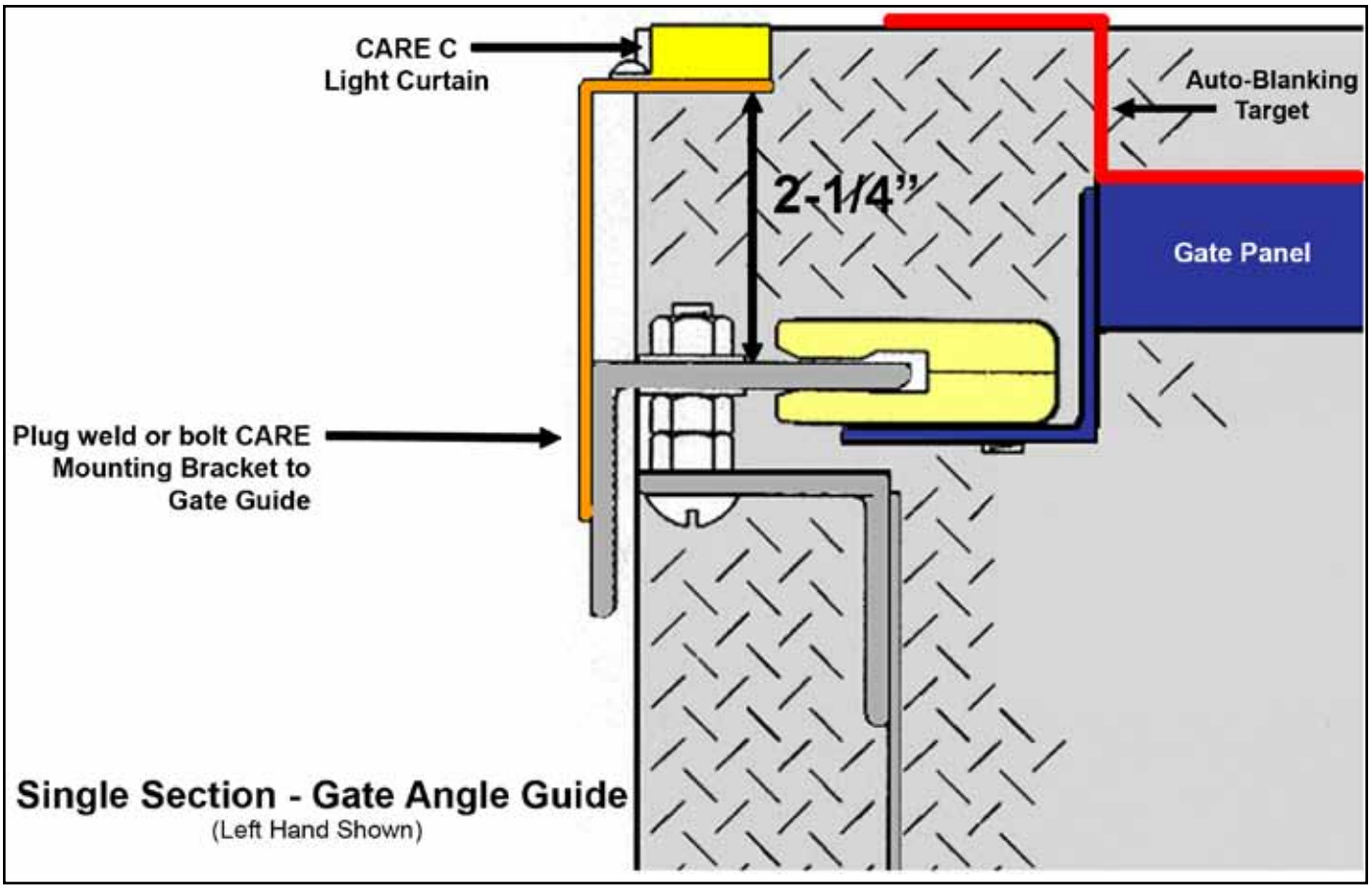

Single Section - Gate Angle Guide
(Left Hand Shown)

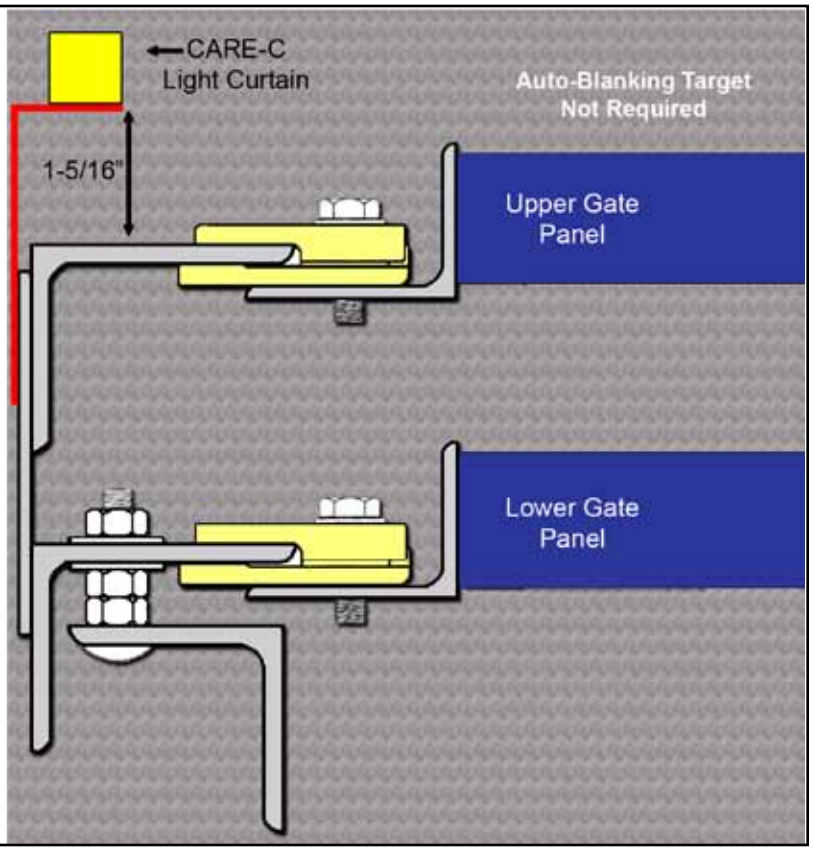

2-Section Compound Gate with Angle Guides
(Left Hand Shown)

2 *Install Sensor Edges*

Mount the sensor edges to the Mounting Brackets with 3 screws provided by CEDES.

The sensor lenses (black dots on one side of the sensor edges) have to face each other.



3 *Mount The Control Unit*

Mount the CARE-C Control Unit to a stable and safe location on top of your Car Enclosure. If you have an iDRIVE.G Gate Control, you can mount it directly to the outside of the Control cabinet

IMPORTANT!
The CARE-C Cables are 16' long. Be sure to mount the Control Unit in a location that can be reached by the cables. If you require cable extensions, please call Courion

4 *Install the Auto-Blanking Target to the Reversing Edge*

Attach the Auto-Blanking Target found in Courion Hardware Kit #760 (Part #94-000760) over the Gate Reversing Edge Cover. Auto-Blaning Target not required on Courion P Style 2-Section Compound Gates.



5 *Connect the Light Curtain Cables*

If you have a **Cegard Max Light Curtain**, connect the cables from the Emitter and Receiver Edges to the Light Curtain Control Unit (White to White/Blue to Blue). Connect the Light Curtain Control Unit to the Courion Door Control using the Wiring Diagrams provided by Courion.

If you have a **Cegard GridScan/Mini Light Curtain**, connect the Emitter and Receiver Edges using the Synchronization Cable. Then plug the Connection Cable into the Blue Plug on the Receiver Edge and connect it to your Courion Door Control using the Wiring Diagrams supplied by Courion.

Cegard Grid/Scan MiniLight Curtain

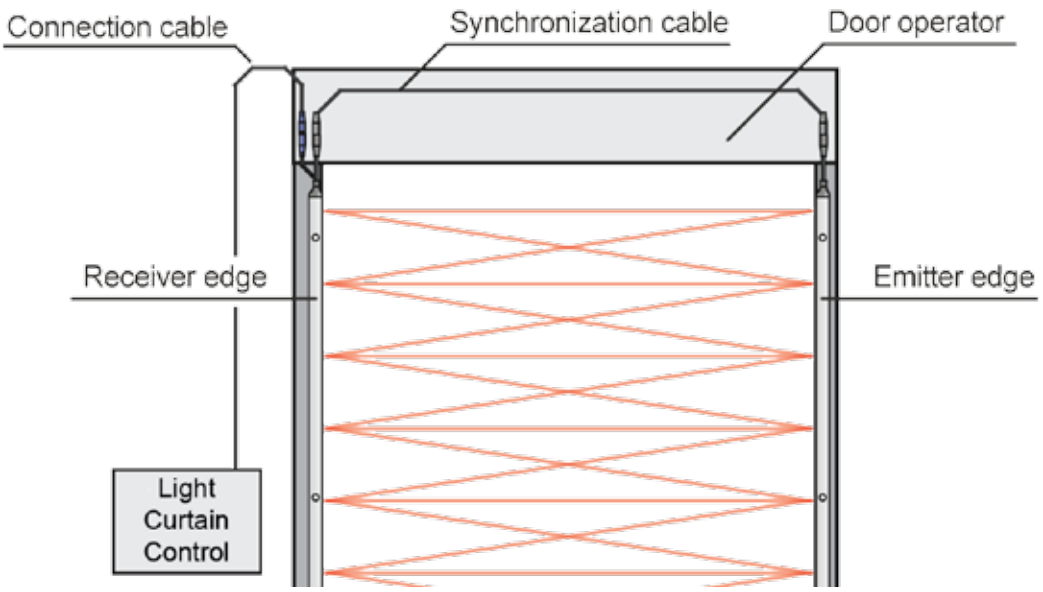

Cegard Max Light Curtain

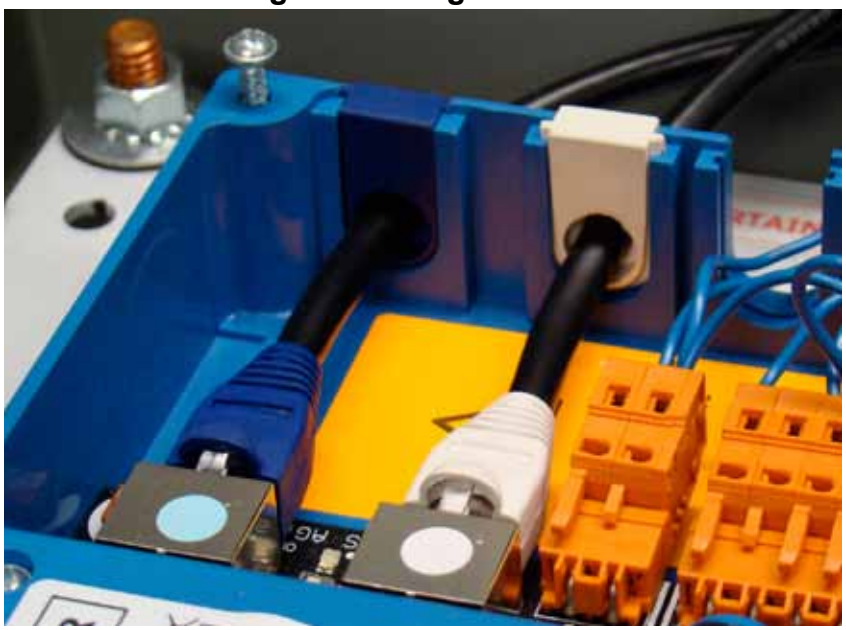

IMPORTANT!
Make sure the CARE-C cables do not run on top of or next to high voltage or VFD motor lines. These electric lines can cause interference with the CARE-C Light Curtain signals.

Cegard Grid/Scan Mini Operational Infomation

The following Operational Data is from Cedes, the manufacturer of the Cegard Grid/Scan Mini Light Curtains utilized by Courion. To make sure you have the latest version, visit www.couriondoors.com where this manual and related documents can be downloaded.

Overview

The Emitter and Receiver Edges create a grid of infrared beams offering up to 2.5 m (8.2 ft) in protection height. When the infrared beams are interrupted, the output sends a signal to the Courion Door Control. As soon as the hoistway opening is clear again, the output switches to indicate that the area is “clear”. The blanking system is designed to mount directly onto the leading edge of the Car Gate Panel. As the Car Gate closes, the Grid/Scan Mini recognizes the Car Gate as such and does not switch the output.

Alignment

The optical axis of the Emitter (Tx) and the Receiver Edge (Rx) need to be aligned towards each other to ensure the light curtain functions reliably. Reflective surfaces near to or parallel to the surveillance area can cause reflections and interfere with the Grid/Scan Mini functions. Keep a reasonable distance between the sensor edges and any reflective surface.

Door Blanking

The Grid/Scan Mini can differentiate between a light beam interruption caused by an object and a light beam interruption caused by the closing door. The GridScan/Mini does this by analyzing the different interruption patterns.

The light beam interruption of a closing Car Gate starts at the topmost beam going downwards. The lower end of the Car Gate needs to cover always at least one beam during the Car Gate closure.

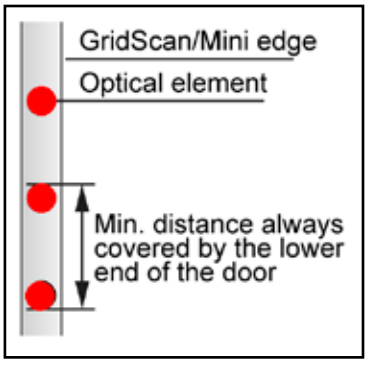

Test Input

To fulfill current code requirements, the Grid/Scan Mini must be tested by the Courion Door Control before each door closing cycle.

LED Status Description

Receiver Edge		Emitter Edge	
LED Green	Light Curtain Free	LED On	Power OK
LED Red	Light Curtain Interrupted	LED Off	No Power
LED Blinking Green or Red	Internal Malfunction		

Maintenance

Although the Grid/Scan Mini does not need regular maintenance, a periodic functional check is strongly recommended:

- Make sure the optical elements are clear of dirt and dust. If necessary, clean the front surface with a soft towel.
- Make sure the edges are securely fastened to the Courion CARE Mounting Bracket.
- Check the mounting position, cable routing, and connection of the sensors.

Troubleshooting

Emitter Edge (Tx)	Receiver Edge (Rx)	Action
LED off	LED off	• Check electrical connections.
LED off	LED Red	• Check the connections of the Synchronization Cable
LED on	LED always Red	• Make sure the hoistway opening is clear. • Check the alignment of the light curtain. • Check that the test input is connected to the test output signal of the Courion Door Control unit and that the signal level and logic are correct. • If the test input is not used, connect it permanently to Usp.
LED on	LED alway Green	• Make sure the sensor edges are not mounted close to any shiny or reflective surface.
LED on	LED switching between Red and Green without interruption	• Make sure that the cables and edges are located away from sources of electromagnetic interference. • Ensure that the Emitter and Receiver are correctly aligned and remain so during door closure.

Wiring Diagram for Courion Next Generation iLEARN System - CARE Grid/Scan Mini wires directly to the iDRIVE.g Cartop Control.

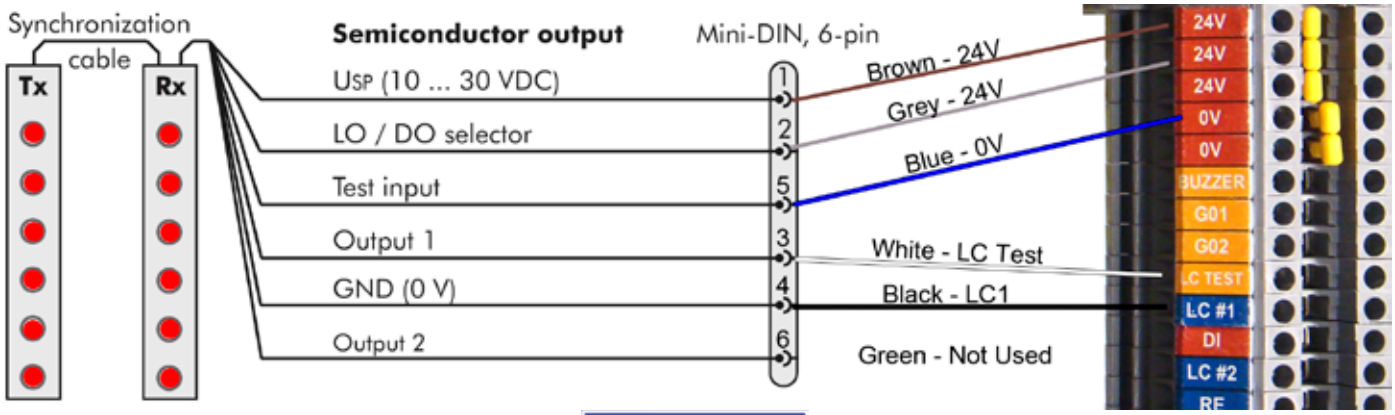

Cegard MAX Operational Infomation

The following Operational Data is from Cedes, the manufacturer of the Cegard Max Light Curtains utilized by Courion. To make sure you have the latest version, visit www.couriondoors.com where this manual and related documents can be downloaded.

Power Supply Input - The CARE C Control Unit has a unique universal power supply that operates within an input voltage range between 17 to 240 Volts AC or DC. No adjustment is necessary. The power supply automatically detects the voltage and adjusts itself for proper function.

Connect the protective ground terminal of the Control Unit to a protective grounded frame. Connect power to the Control Unit. The GREEN LED (power) should be ON. If all light beams are uninterrupted and the Test Input signal is at a high level, the output relay changes the status to "OK" and the YELLOW LED is turned OFF. If there are different LED readings, then go to the trouble-shooting section at the end of this Manual.

Auto Blanking Mode - The CARE C Light Curtain recognizes the gate movement and automatically blanks the beams that are interrupted by the gate itself.

This auto-blanking mode can be disabled by moving the JP1 jumper on the CARE C Control Unit.

Jumper Position	Auto Blanking Mode	Comments
Set	Enabled	A moving gate is detected and automatically blanked
Not Set	Disabled	A moving gate is detected like any other object and triggers the output relay

Output Relay The output relay provides the status of the light grid to the Courion Door Control.			
CARE Control Terminals	**Freight Door Control Terminals**	**CART-MATIC Control Terminals**	**Dumbwaiter Control Terminals**
Common	8A	A	10
NC	8	A1	LC

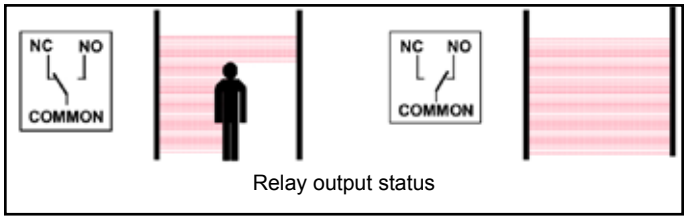

Relay output status

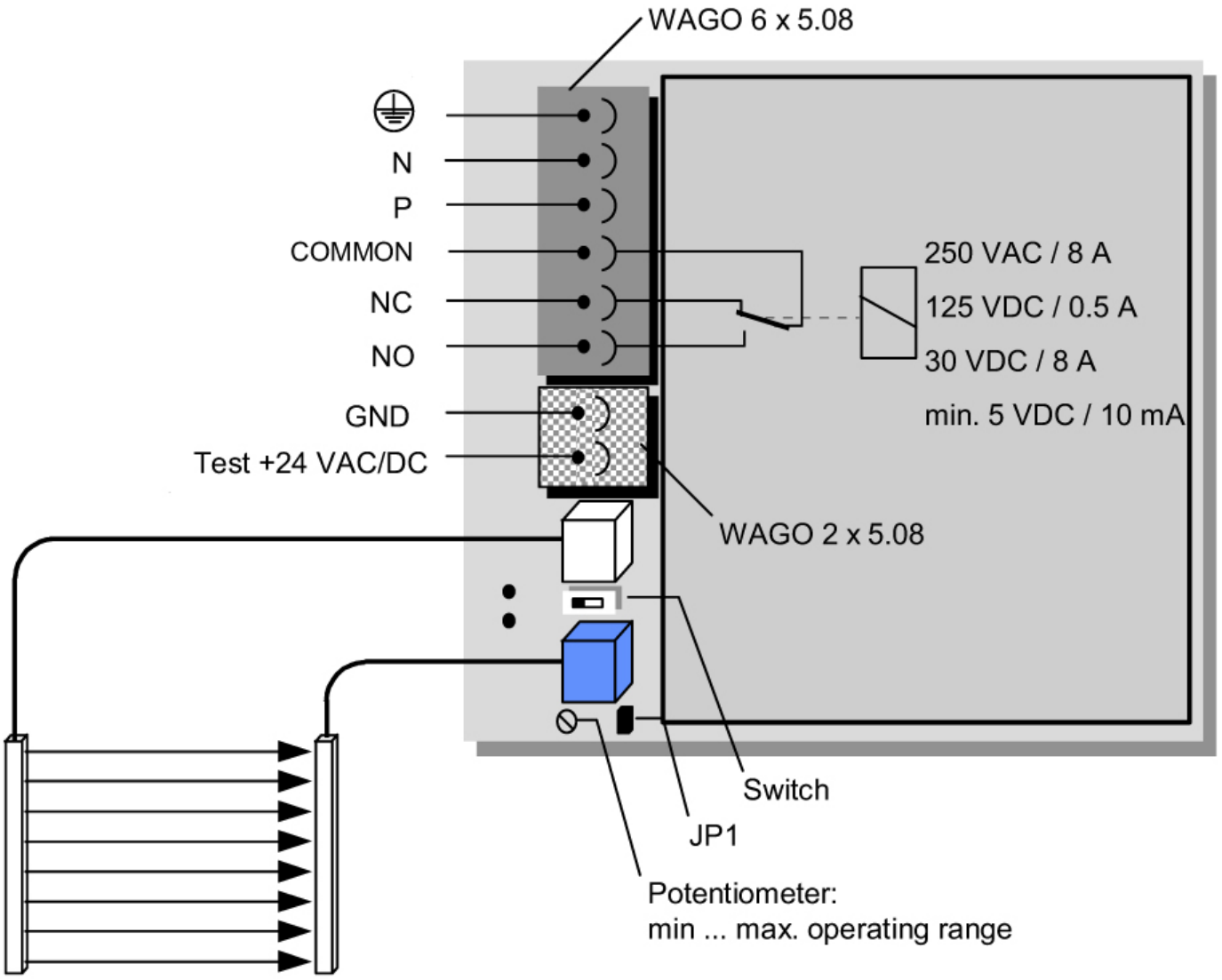

Block Diagram of CARE C Control Unit

Operating Range Setting - A sensitivity potentiometer is provided to adjust the operating range when the CARE C Light Curtain is used on short range of less than 9'-6" (3m).

Should operating range be less than 9'-6" (3m), adjust the sensitivity potentiometer as follows:

1. Ensure that the protection area is free.

2. Turn the potentiometer counter-clockwise until the yellow LED illuminates.

3. Remember this potentiometer position.

4. Turn the potentiometer clockwise halfway between the prior position and the maximum position.

Factory setting is maximum sensitivity.

Buzzer - The CARE C Control Unit has a buzzer that is active when one or more beams are interrupted. The buzzer can be switched on and off with the slide switch located between the connectors of the sensor edges.

Test Input - The safety integrity check of the CARE C Light Curtain is initiated by a test input signal as follows:

1. In normal operation, the Test Input has to be set to high level. In this mode, the output relay follows the status of the light beams as shown on page 4.

2. Prior to the car gate closing, the Test Input has to be set to low level. The Output Relay changes its status to 'Stop' as if one or more beams are interrupted. This is the indication that the CARE C Light Curtain is performing an internal safety check.



Operating range potentiometer setting

3. If this internal safety check is successful (no failure detected) and no beam is interrupted, the Output Relay changes its state to 'OK' so the car gate can close.

4. If the internal safety check detects a failure of the CARE C Light Curtain meaning that the device loses its safety functionality, the status of the Output Relay remains in the 'Stop' position.

Installation Notes

1. The sensor edges have to be aligned better than +/- 10°.

2. The sensor edges must not be bent or be exposed to tension.

DANGER OF HIGH VOLTAGE!

Always disconnect power before opening the cover of the Control Unit.

Trouble Shooting

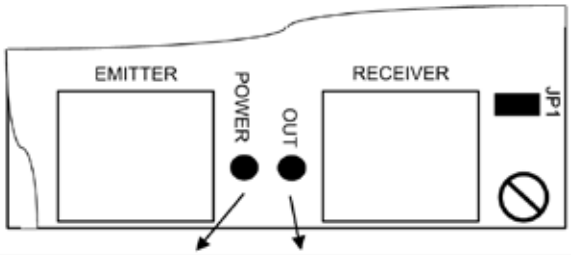

Indication	green	yellow	Action
No function, door open	○	○	Power supply ok? Fuse ok?
Door open, free protective area	●	●	Obstruction? Installation? EMC-interference? Protective earth (PE) connected? Control unit damaged? Alignment of sensor edges not appropriate? Dirty sensor edges? Test input set to high level?
Semitransparent objects are not detected	●	●	Operating range < 3m? Sensitivity potentiometer correctly set?
Receiver R problem?		◎	Receiver not connected? Receiver damaged? Receiver cable damaged?
Emitter E problem?	◎		Emitter not connected? Emitter damaged? Emitter cable damaged?
Person or object detected 	●	●	Normal operation
No object 	●	○	Normal operation

● = LED on ○ = LED off ◎ = LED flashing

COURION
The Next Generation

THE NEXT GENERATION OF FREIGHT ELEVATOR DOORS

www.couriondoors.com

3044 Lambdin Avenue
St. Louis, Missouri 63115
(314) 533-5700 or (800) 533-5760
(314) 533-5720 (fax)
sales@couriondoors.com

EECO Power Unit Catalog

Power Units



Belt Drive (Dry) Power Unit

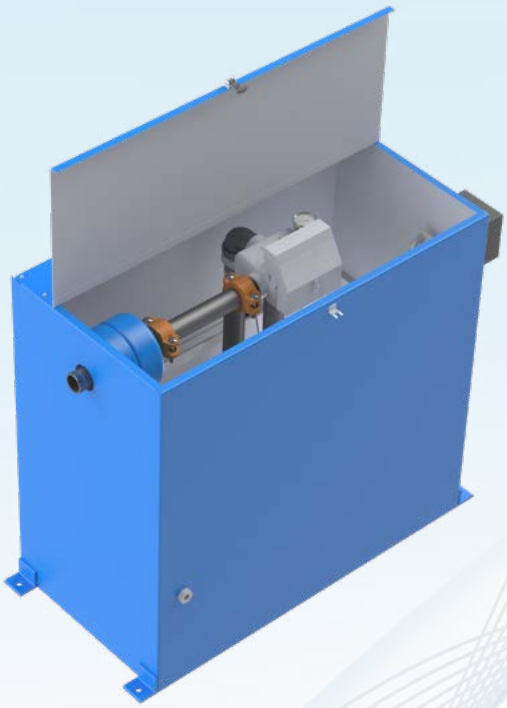

Submersible Power Unit

Chapter Contents

General Information 24
Specifications 25
Submersible Power Units 26
Submersible Power Units Cont'd 27
Submersible Power Units Cont'd 28
Belt Drive (Dry) Power Units 29
Belt Drive (Dry) Power Units Cont'd 30
Custom Power Units 31
Power Unit – Standard Features 32
Power Unit – Standard Features Cont'd 33
Optional Features 34
Optional Features 35

Power Unit – General Information

Elevator Equipment Corporation can provide power units for any application, from small capacity residential to the largest freight elevators. EECO can furnish a standard model power unit, in accordance with your specifications, or we can perform the necessary calculations, based on your data, to select and recommend a power unit to meet your requirements.

All EECO Products are Green Compatible

EECO manufactures power units with precision equipment, skilled and experienced production personnel, and a knowledgeable engineering staff to comply with the exacting standards required to produce a quality product. The latest CNC equipment and technology is utilized to assure strict adherence to essential dimensions and tolerances. All EECO products are designed and manufactured in accordance with the Safety Code for Elevators and Escalators, ASME A17.1/CSA B44. With years of testing and field study, EECO has designed submersible and belt drive power units that are unequaled in the industry for performance and reliability. The primary objective of Elevator Equipment Corporation is to provide a quality product that consistently meets or exceeds the contractual demands and expectations of our customers.

Quality Assurance

Quality Control is an essential and integral part of our manufacturing process. Every phase of production is monitored to assure that each power unit is assembled in accordance with engineering and shop order specifications. Throughout the manufacturing process, you can be assured that our high quality standards are met and that the finished product meets your requirements.

Special Environmental Conditions

EECO can provide units for installation in hazardous or humid environments using moisture resistant or explosion proof components. Explosion Proof Valves have a NEMA 7 rating and comply with all requirements of Class I, Division 1, Groups A, B, C, D, and Class II, Division 1, Groups E, F, and G. Contact EECO for more information.

All EECO Products are "Green Compatible" as a standard when used with biodegradable (vegetable) oils that **do not** contain a high acidic property.



Explosion Proof UV-5AT

Delivery Times

It is our goal to deliver a power unit when needed. If a rush order is required, EECO will make every effort possible to meet your requirements. Contact EECO for current lead times.

General Specifications

Units are designed to fit through a standard Machine Room Door (see dimensional chart). The tank is constructed with a 12 GA. Steel body and a 14 GA. Steel cover. A means for checking oil level is provided along with a junction box for connecting the motor, Low Oil Switch, Thermostat Switch, and control valve wires. The junction box can be installed internally or externally.

Power Unit – Specifications

General Notes

- Tank Size required is based on space needed for pump & motor assembly and amount of oil needed for operation.
- All dimensions may vary slightly due to assembly tolerances.
- All units are designed to be mounted on 3/4" (2 cm) thick isolation pads. Overall height when set is 3/4" higher.
- Actual "Usable Oil" has an allowance for 10 Gal. (38 Liters) of reserve oil.
- "Usable Oil" and "Oil Required to Fill Tank" are based on standard tank heights. If greater oil volume is required, the tank height can be increased accordingly.
- Power Units are furnished with EECO control valves as a standard. Other manufacturers' control valves can be substituted, if requested.

Performance Characteristics



Construction

All units are designed and constructed in accordance with applicable requirements of ASME A17.1 / CSA B44. A grooved outlet is standard. A male threaded outlet is available.

Electrical

Available voltages are 208 Vac, 230/460 Vac or 575 Vac, 3-Phase, 60 Hz. Provision can be made for operation on 50Hz.

Units can also be provided with voltages of 208 Vac or 230 Vac Single Phase, 60 Hz although motor horsepower is limited to 10 hp (7.5 kW).

Horsepower

2 ½ hp (1.9 kW) up to 50 hp (37.3 kW) for single submersible pump / motor combinations.

5 hp (3.7 kW) thru 100 hp (74.6 kW) for single belt drive pump / motor combinations.

Flow Rate

Submersible - 3 gpm (15 lpm) up to 255 gpm (852 lpm).

Belt Drive - 15 gpm (57 lpm) thru 500 gpm (1893 lpm).

Heat Output

BTU/Hr = Hp * (1 - Motor Efficiency) * 2545

Working Pressure

Varies depending on car speed and gross load.

Oil Recommendations

Recommended Operating Fluid: Use a good brand of ISO VG 32 turbine oil with a viscosity of 150 ssu @ 100° F (38° C). A minus pour point is recommended. A biodegradable (vegetable)oil that **does not** contain a high acidic property is acceptable if it meets the same specifications.

All EECO Products are "Green Compatible" as a standard when used with biodegradable (vegetable) oils that **do not** contain a high acidic property.



Submersible Power Units

Description of a Submersible Power Unit

EECO Submersible Power Units are designed with the directly connected pump and motor submerged in the oil reservoir. An EECO Silencer is located between the pump and the control valve as standard. The control valve and an optional muffler or dampener are mounted in the tank above the maximum oil level, providing access for valve adjustment. These components can also be located above the tank when greater oil capacity is required.

Submersible pumps and motors are less costly than comparable air cooled components and are designed to allow for quick and easy installation. The insertion of the pump and motor in the oil helps to dampen noise generated during operation.

Because the pump and motor are directly connected, the pump output flow rate is a result of the speed (RPM) of the motor. Therefore, the output flow rate is a consequence of available pump sizes.

Commercial Submersible Power Units

Standard Features

- EECO UV5-BT Control Valve
- EECO Silencer
- Thermal Switch (Preset To 145°F)
- Isolation Anchoring System
- Oil Level Liquid Gauge
- 80 Starts Per Hour
- Pressure Gauge Fitting with 1/8" Shut Off Valve

Available Options

- Valve Return Filter (VRF)
- 120 Starts Per Hour
- Tank Mounted Starter Enclosure
- Motor Starter
  - Wye-Delta
  - ATL
  - Solid State
- Adjustable Load Weighing Switch
- EECO Muffler
- EECO Highly Effective Dampener
- Oil Heater
- Maxton Control Valves
- Low Pressure Switch
  - N.O
  - N.O./N.C.
- Viscosity Switch
- Low Oil Switch
- Hand Pump
- OSHPD Approved Anchoring System
- Constant Down Speed
- Pre-Wired (JBox and Terminals)
- Charcoal Breather

Flat Bottom Commercial Power Units

EECO Commercial Flat Bottom Submersible Power Units are available in two depths, 18" and 24". The 18" power units are the most compact and are particularly useful where Machine Room space is at a premium. They are lightweight for ease of handling, very quiet, and highly efficient. They are also our most economical units. EECO can also design and manufacture fully customized power units per the customer's specifications.

MODEL	Dimensions in Inches(in) / Dimensions in Centimeters(cm)								Gallons(gal) / Liters(lit)		
	A	B	C	D	With UV-5 E	With UV-5 F	With UV-5 G	With UV-5 H	Usable Oil	Charge Oil	Total
SPUF-36	36.00	24.48	44.00	41.00	35.19	38.00	12.30	6.88	68.28	47.92	116.20
	91.44	62.18	111.76	104.14	89.38	96.52	31.24	17.48	258.10	181.14	439.24
SPUFO-36	36.00	24.48	44.00	41.00	49.80	52.60	12.30	6.88	107.50	47.92	155.42
	91.44	62.18	111.76	104.14	126.49	133.60	31.24	17.48	406.35	181.14	587.49
SPUF-48	47.00	24.48	44.00	52.00	35.19	38.00	12.30	6.88	89.46	63.19	152.65
	119.38	62.18	111.76	132.08	89.38	96.52	31.24	17.48	338.16	238.86	577.02
SPUFO-48	47.00	24.48	44.00	52.00	49.80	52.60	12.30	6.88	140.76	63.19	203.95
	119.38	62.18	111.76	132.08	126.49	133.60	31.24	17.48	532.07	238.86	770.93
SPUF-60	60.00	24.48	44.00	65.00	35.19	38.00	12.30	6.88	114.50	81.24	195.74
	152.40	62.18	111.76	165.10	89.38	96.52	31.24	17.48	432.81	307.09	739.90
SPUFO-60	60.00	24.48	44.00	65.00	49.80	52.60	12.30	6.88	180.06	81.24	261.30
	152.40	62.18	111.76	165.10	126.49	133.60	31.24	17.48	680.63	307.09	987.71



Tank Mounted Controllers are Available

Submersible Power Units Cont'd

Special Application V-Bottom Commercial Power Units

EECO's Commercial V-Bottom Submersible Power units are available in 60", 72", 84", and 96" lengths and are 24" deep. Usable oil volumes range from 71 gal. to 180 gal. depending on size and configuration.

Model	Dimensions in Inches (in) / Dimensions in Centimeters (cm)													
	A	B	C	D	With UV-5AT					With UV-7B				
					E	F	G	H	J	E	F	G	H	J
SPU-72	72.25	24.00	44.00	76.50	38.00	34.88	10.50	8.50	56.00	35.25	35.25	9.63	9.63	58.00
	(183.5)	(61.0)	(111.8)	(194.3)	(96.5)	(88.6)	(26.7)	(21.6)	(142.2)	(89.5)	(89.5)	(24.4)	(24.4)	(147.3)
SPU-84	84.25	24.00	44.00	88.50	38.00	34.88	10.50	8.50	56.00	35.25	35.25	9.63	9.63	58.00
	(214.0)	(61.0)	(111.8)	(224.8)	(96.5)	(88.6)	(26.7)	(21.6)	(142.2)	(89.5)	(89.5)	(24.4)	(24.4)	(147.3)
SPU-96	96.25	24.00	44.00	100.25	38.00	34.88	10.50	8.50	56.00	35.25	35.25	9.63	9.63	58.00
	(244.5)	(61.0)	(111.8)	(254.6)	(96.5)	(88.6)	(26.7)	(21.6)	(142.2)	(89.5)	(89.5)	(24.4)	(24.4)	(147.3)

Model	Capacities in Gallons (gal) / Capacities in Liters (lit)									
	Usable Oil					Oil Required to Fill Tank				
	With UV-5AT			With UV-7B		With UV-5AT			With UV-7B	
	Valve in Tank		Valve Out	Valve in Tank	Valve Out	Valve in Tank		Valve Out	Valve in Tank	Valve Out
	LH	RH				LH	RH			
SPU-72	109.00	86.00	135.00	86.00	135.00	190.00	167.00	246.00	167.00	246.00
	(413)	(326)	(511)	(326)	(511)	(719)	(632)	(931)	(632)	(931)
SPU-84	127.00	100.00	157.00	100.00	157.00	222.00	195.00	287.00	195.00	287.00
	(481)	(379)	(594)	(379)	(594)	(840)	(738)	(1086)	(738)	(1086)
SPU-96	145.00	114.00	180.00	114.00	180.00	253.00	222.00	328.00	222.00	328.00
	(549)	(432)	(681)	(432)	(681)	(958)	(840)	(1242)	(840)	(1242)

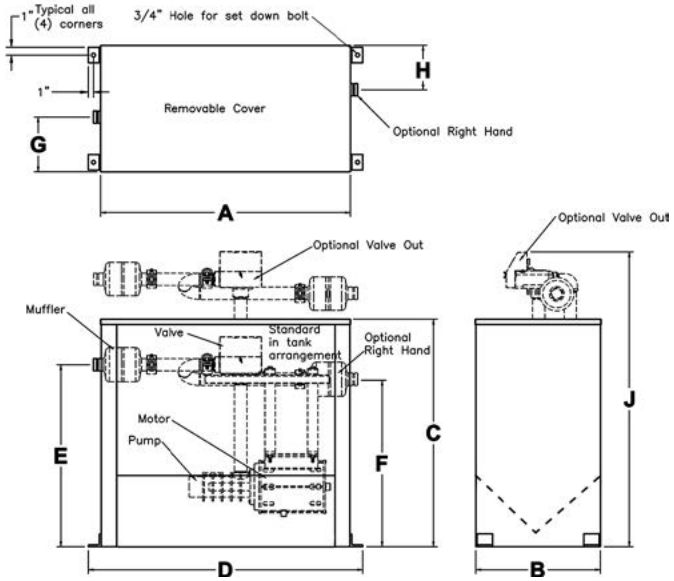

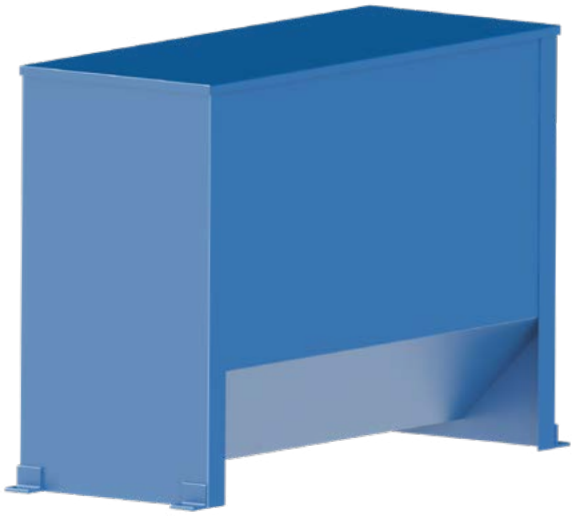

Submersible Power Units Cont'd

Residential, LULA, and MRL Submersible Power Units

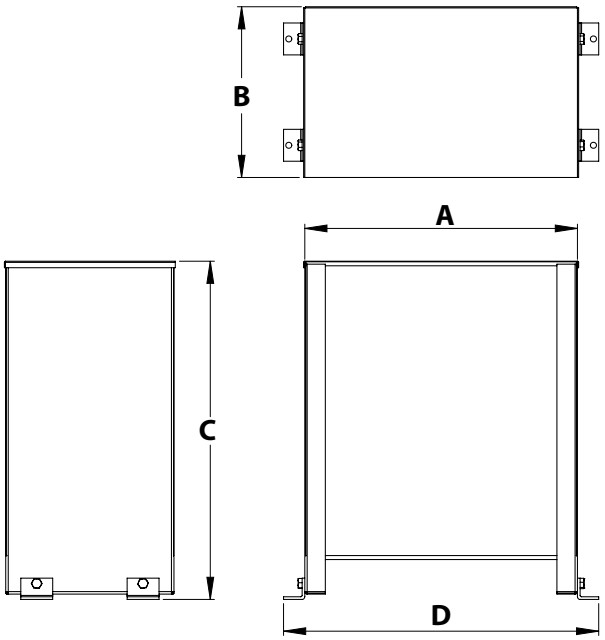

Model	Dimensions in Inches(in)				Gallons(gal)
	Dimensions in Centimeters(cm)				Liters(lit)
	A	B	C	D	Usable Oil
RPU	25.00	16.00	29.75	28.00	20
	(63.8)	(40.6)	(58.4)	(71.5)	(76)
LPU	36.00	16.00	31.50	40.00	15
	(91.4)	(40.6)	(80.0)	(101.6)	(57)
SMPU	31.00	11.25	52.75	34.75	33
	(78.7)	(28.3)	(134.3)	(88.0)	(125)



Residential Power Unit (RPU)



LU/LA Power Unit (LPU)



SMRL Power Unit (SMPU)



PMRL Power Unit (SMPU)

Belt Drive (Dry) Power Units



Description of a Belt Drive Power Unit

EECO Belt Drive (Dry) power units are designed with the pump and motor mounted on a sub-base located below the oil reservoir tank and is enclosed with sound isolation panels to limit transmission of noise during operation. The exposed control valve which is located above the tank allows for easy access to adjustments. A removable belt guard is provided to allow access to the pump and motor compartment for maintenance or adjustment of the drive system. Because the pump and motor are connected by means of "v"-belts and sheaves, the pump RPM can be adjusted, by selecting the proper ratio of pump and motor sheaves, to obtain the required flow.

General Specifications

The tank is constructed with a 12 ga. steel body, and removable 16 ga. cover, belt guard, and rear panel. Units are designed to fit through a standard machine room door (see dimensional charts). A means for checking oil level is provided. The pump and motor are mounted on a structural steel sub-frame that is secured to the main Frame. Optional isolation mounts are available to limit transmission of mechanically generated noise and vibration. Provisions are included to allow for easy adjustment of belt tension and alignment of sheaves. The outlet in the tank is protected by a removable strainer to allow for easy cleaning. A removable oil drip pan is provided. Mounting feet are provided with holes to allow for securing to the floor and Isolation Anchor Kit is also included for installation to the pit floor.

Standard Features

- **EECO UV-5AT or UV-7B Control Valve mounted above Tank**
- **EECO Muffler**
- **Thermal Switch (Preset To 145°F)**
- **Isolation Anchoring System**
- **Oil Level Liquid Gauge**
- **80 Starts Per Hour**
- **Pressure Gauge Fitting with 1/8" shut off valve**
- **Sound Isolation Panels**
- **Removable Belt Guard**
- **Screened Pump Inlet**

Available Options

- **Valve Return Filter**
- **120 Starts Per Hour**
- **Tank Mounted Starter Enclosure**
- **Motor Starter**
  - **Wye-Delta**
  - **ATL**
  - **Solid State**
- **Adjustable Load Weighing Switch**
- **EECO Highly Effective Dampener**
- **Oil Heater with Thermostat**
- **Viscosity Switch**
- **Low Oil Switch**
- **Hand Pump**
- **OSHPD Approved Anchoring System**
- **Constant Down Speed**
- **3/4" Tank Drain Valve**
- **Magnetic Tank Drain Plug**
- **Shut Off Valve between Tank and Pump**
- **Tank Vent**
- **Charcoal Breather**

Belt Drive (Dry) Power Units Cont'd

Model	Dimensions in Inches (in) / Dimensions in Centimeters (cm)										Gallons (gal) / Liters (lit)	
	A	B	C	D	With UV-5AT			With UV-7B			Usable Oil	Oil Required to Fill Tank
					E	F	J	E	F	J		
DPU-48	48.25	35.50	54.50	52.50	60.25	58.25	65.50	60.00	60.00	67.50	99.00	155.00
	(122.6)	(90.2)	(138.4)	(133.4)	(153.0)	(148.0)	(166.4)	(152.4)	(152.4)	(171.5)	(375)	(587)
DPU-60	60.25	42.00	60.50	64.50	66.25	64.25	71.50	66.00	66.00	73.50	187.00	270.00
	(153.0)	(106.7)	(153.7)	(163.8)	(168.3)	(163.2)	(181.6)	(167.6)	(167.6)	(186.7)	(708)	(1022)
DPU-72	72.25	42.00	60.50	76.50	66.25	64.25	71.50	66.00	66.00	73.50	225.00	324.00
	(183.5)	(106.7)	(153.7)	(194.3)	(168.3)	(163.2)	(181.6)	(167.6)	(167.6)	(186.7)	(852)	(1226)
DPU-84	84.25	42.00	60.50	88.50	66.25	64.25	71.50	66.00	66.00	73.50	262.00	378.00
	(214.0)	(106.7)	(153.7)	(224.8)	(66.3)	(64.3)	(71.5)	(66.0)	(66.0)	(73.5)	(992)	(1431)

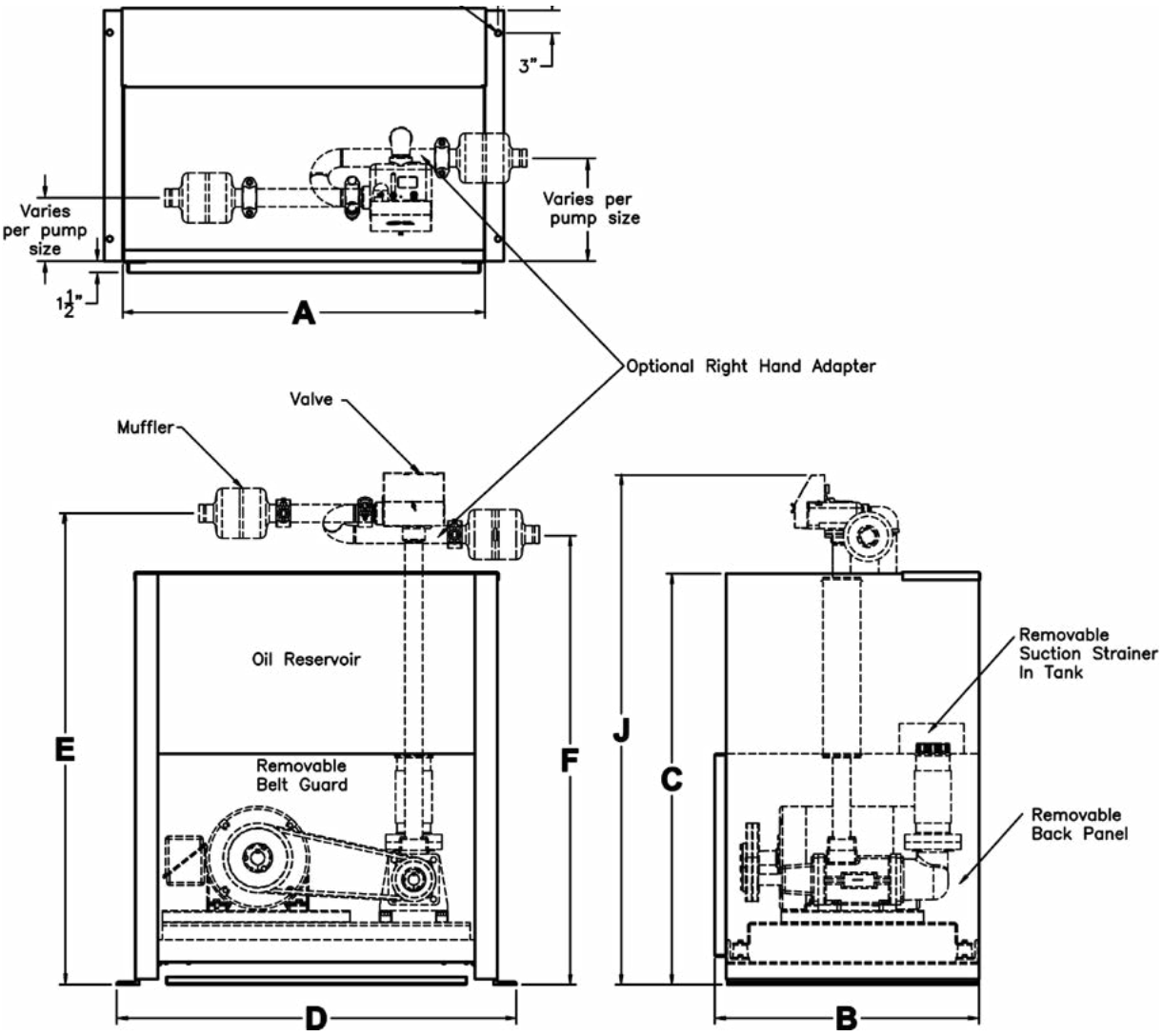

Custom Power Units

EECO specializes in the design and construction of custom power units to meet your customer's unique demands. Provide EECO with your project requirements and we'll design and build the proper power unit for you.

Dual Power Units

A double pump/motor combination can be supplied in both submersible and belt drive (dry) arrangements. This dual arrangement may be desired in facilities where the elevator is critical to the facility's operation, as the system can be arranged so that the elevator will still operate at a reduced speed if one pump or motor fails.

A dual unit may also be needed when the amount of oil flow required to lift the car at the specified speed exceeds the output of a single pump / motor combination.

Dual arrangements can be provided with the pump/motor combinations in a single tank or in two separate tanks.



Belt Drive Dual Pump & Motor with Single Valve

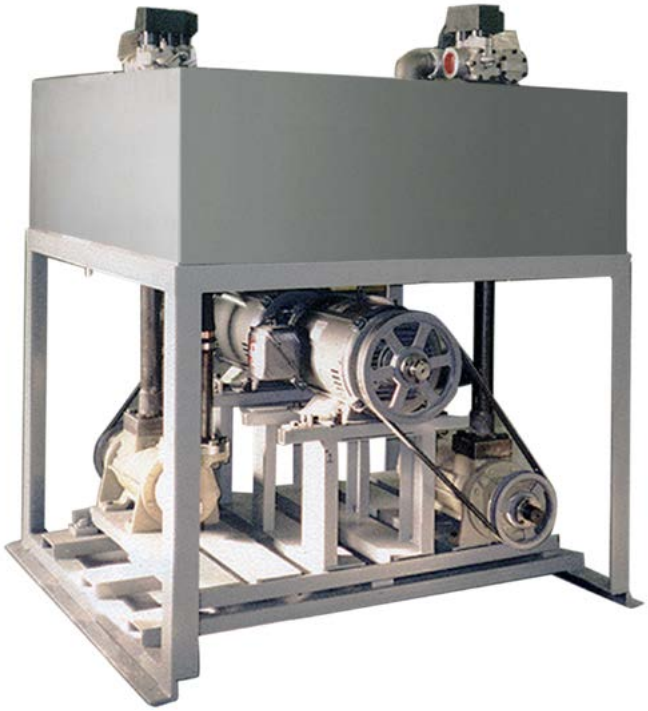

Belt Drive Dual Pump & Motor with Dual Valves

Two Piece (Breakdown) Power Units

Special two-piece belt drive (dry) units can be furnished in any required size and arrangement. Access to the building, or into the machine room, may be such that the only way to install a unit is in pieces, with final assembly on the job. For any arrangement, EECO can design a solution and provide you with a "footprint" of the proposed unit to verify available space requirements.

Power Unit – Standard Features



Pump

Submersible pumps are positive displacement, low slip, three screw design, and are directly connected to the motor.

Belted pumps are foot mounted, positive displacement, low slip, three-screw design.



Motor



Submersible motors are designed to operate submerged in oil and are rated at 80 starts/hr or 120 starts/hr. 3-Phase motors are 3400 rpm and include leads for Across-the-Line, Wye-Delta, or Solid State starting. Single-Phase motors are 1750 rpm or 3400 rpm for 10hp (7.4kW) and include the starting capacitors for Across-the-Line starting. These motors include a built in thermal detector which should be wired to the controller to shut the power unit down in case of overheating.



Belted motors are specially designed for oil hydraulic elevator service with squirrel cage construction and are 1800 rpm.

Download Valve Catalog

Control Valve



All power units include an EECO control valve as standard. A Constant Down Speed control valve can be furnished as an option. All units are supplied with 1/8" brass shut off valve and male quick-disconnect fittings.

Other manufacturer's control valves can be furnished upon request.





Hydraulic Muffler or Silencer

The **Hydraulic Muffler (EHM)** or **Silencer (EHS)** provide superior noise suppression and are included with each unit. They can be omitted if desired.



Power Unit – Standard Features Cont'd

Pressure Gauge Fittings

The **Pressure Gauge Fitting System** is used to provide a means of attaching a Pressure Gauge (sold separately) to the control valve. This system is provided with a 1/8" brass shut off valve and a male quick disconnect fitting. Individual fittings can be purchased to create your own arrangements. Contact EECO for details.





Oil Level Liquid Gauge

The **Oil Level Liquid Gauge** is made of corrosion and rust resistant milled aluminum. The end pieces are permanently secured through a staking process. Fluid enters through the cross hole in the hollow lower bolt and is communicated back into the tank through the cross hole in the hollow top bolt.

Thermal Switch

The **Thermal Switch Assembly (TSW-1)** is required to be installed on all Hydraulic Power Units, per ASME A17.1/CSA B44 3.26.6.5, to prevent the liquid temperature from rising above its maximum operating temperature. These switches are factory preset at a temperature setting of 145° F (63° C).



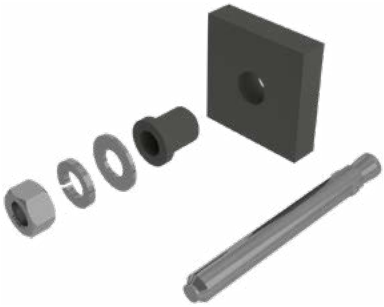

Isolation Anchor Kit

The **Isolation Anchor Kit** allows the installer to secure the power unit to the machine room floor while isolating the unit from transferring vibration and noise through the building. Optional **OSHPD Approved** anchoring kit available. Contact EECO for more information.

Power Unit – Optional Features



Hydraulic Dampener

The **Hydraulic Dampener (EHDN)** is extremely effective in suppressing the sound and pulsation present in hydraulic elevator systems. The EHDN has a minimum burst pressure of 6000 psi with an ASME A17.1/CSA B44 allowable working pressure of 1200 psi. They are available in 2.0", 2.5", 3.0", and 4.0" with combinations of grooved and/or threaded outlets.

Oil Cooler

The **Oil Cooler (OC)** is extremely efficient in cooling the oil in the hydraulic elevator machine room in which it is installed. The heart of the unit consists of a triple screw pump which is highly reliable and quiet. A Thermal Control System is included.



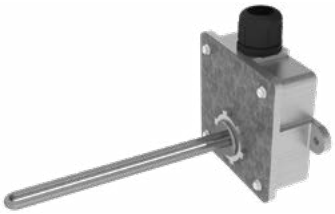

Tank Heater

The **Tank Heater (TH)** is simple to install and operate. It is designed to keep your hydraulic oil at the optimum operating temperature in cooler environments which provides optimum operation of your hydraulic elevator system. Pre-Set 110° F Thermostat, 120 Volt AC, 250 Watts, 2.1 Amps, Oil-Tight Fittings included.

Shut Off Valve

The **Shut Off Valve (SOV)** is used to isolate one section of the system from another. All Shut Off Valves are constructed of ductile iron bodies and use a stainless steel ball. A locking device is standard on all sizes.



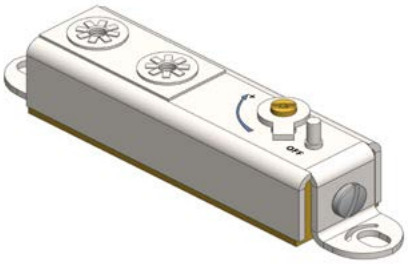

Viscosity Switch

A thermostat that is field adjustable by a fine adjustment trim screw which can activate a viscosity control system. The thermostat is UL and CSA recognized for a maximum of 1500 watts at 230 volts AC with a single contact. The unit has a heat sensitive base plate which can be mounted directly to the outside of a hydraulic tank or by an aluminum "L" bracket with little loss of sensitivity.

This switch can be used to control pump/motor running in bypass mode to heat up the oil in lieu of a tank heater or as a control to turn on/off an oil cooler and/or a tank heater. The switch is normally closed and is open above the set temperature.

Power Unit – Optional Features Cont'd



Valve Return Filter Kit

The **Valve Return Filter (VRF)** attaches to the tank return port of the valve. The filter bag is easily replaceable. The EECO VRF allows you to easily capture particles 5 microns in size and larger as well as helping to prevent the buildup of debris within the tank, making it easier to clean.



Low Oil Switch

A **Low Oil Switch (LOS)** is used to detect the oil level in a reservoir. The 1-3/16" diameter float helps to limit surges that might occur. The switch is UL recognized and CSA listed for a maximum of 3 amps @ 250 VAC with a SPST.

The standard configuration is normally open which can be changed to normally closed, by inverting the float on the units stem. Mounting is accomplished by 1/4" NPT and electrical termination are two 18 AWG, 39" long wires.



Load Weighing Kit

EECO's **Load Weighing Kit (LWK)** is an addition to a new or existing Power Unit to prevent the elevator from being overloaded. The switch can be wired into the controller, if the provision is available, through either a normally open or normally closed contact.



Oil Level Sight Glass

The **Oil Level Sight Glass** for hydraulic elevator power units is used to visually inspect the oil level in the tank. It is available in 1" Diameter with NPT threads.

Carbon Desiccant Breather



The **EECO Carbon Desiccant Breather (ECDB)** is provided as a contamination control breather technology to reduce particulate, moisture contamination, and hydraulic oil odors by moisture absorption. These are supplied as Replacement Desiccant/Filter Cartridges for ease of service and fully disposable.

The size available is a 5" dia. by 8" long with a slip fit 2" FNPT Connection. The medium is an activated carbon, synthetic graphite, and silica gel. Applications: MRL Hydraulic Elevators and standard machine rooms requiring substantial hydraulic oil odor control on hydraulic elevator systems.

ELPRO Roller Guides 33SRG

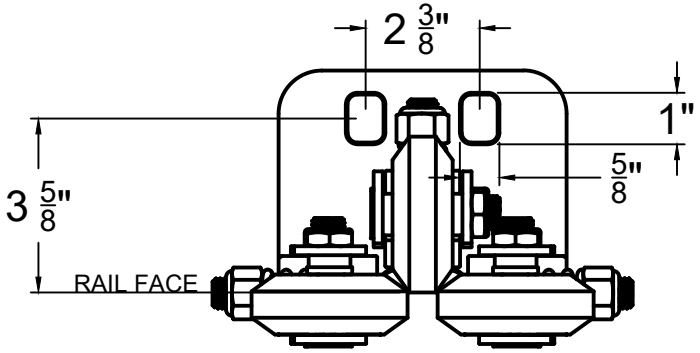

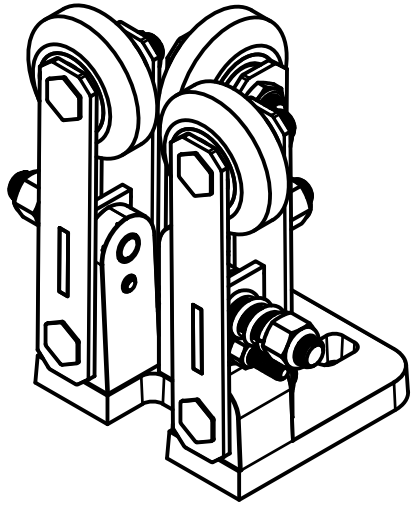

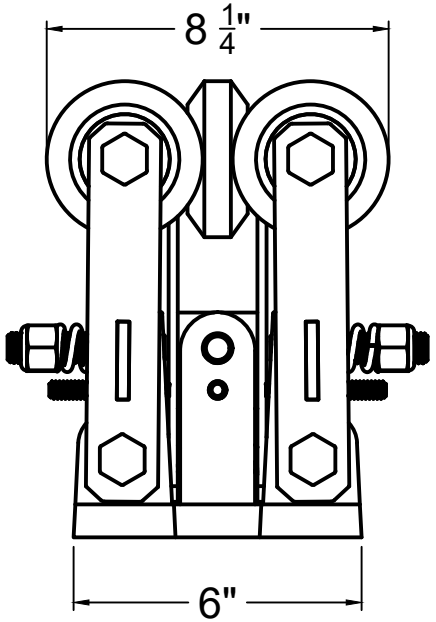

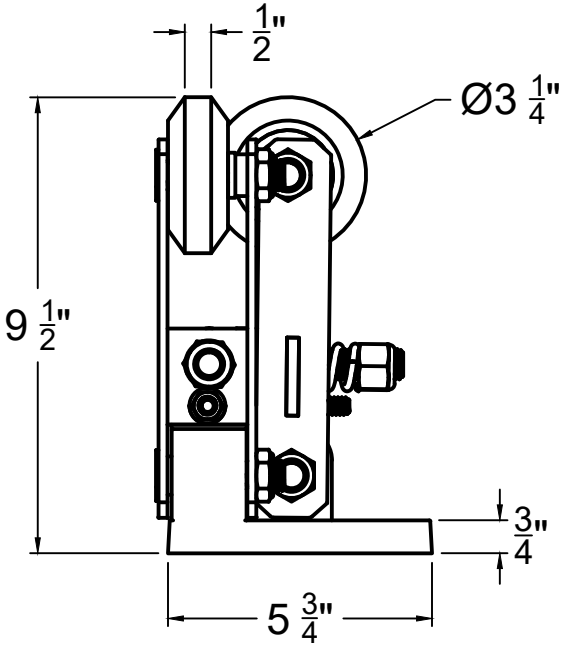

TOLL FREE: 1-800-362-6051
PHONE: (805) 481-3378
E-MAIL: SALES@ELPROINC.COM

MODEL NO.

33SRG

SCALE:	1:4
WEIGHT:	13 LBS
RAIL SIZE:	8 LB - 15 LB
MAXIMUM SPEED:	400 FPM
MOUNTING BOLTS:	5/8"

MAXIMUM GROSS LOAD = 8,500 LBS

DRAWN BY:	LH
CHECKED BY:	DB
APPROVED BY:	DB

DIMENSIONS IN INCHES UNLESS OTHERWISE SPECIFIED

iLearn-System-Manual CURION

iLEARN System Manual

Descriptions and Operations

Version 2.10 iLEARN and 2.05 iDRIVE



iLEARN
Door Control



iDRIVE
VFD Floor Control

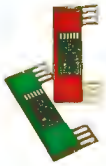

iSENSOR
Door Positioner

The Next Generation

Table of Contents

Introduction	3
Machine Room Power Requirements	3
iWIRE Package Provided By Courion	5
Interlock Wiring	6
Initial Start Up And Adjustment	8
iLEARN Door Control	13
iLEARN Door Control Menu	20
Diagnostics	20
Operating Parameters	29
Door Parameters	30
Gate Parameters	31
Event Counter	33
Event History	33
Upload History	33
Set Time and Date	34
Adjust Contrast	34
iDRIVE VFD Floor Control	35
iDRIVE.G VFD Gate Control	37
iSYSTEM Troubleshooting Guide	41
Frequently Asked Questions (FAQ)	45
iLEARN Door Control Error Messages	47
iLEARN Door Control Menu - Supplement	53
iLEARN-iLEM Addendum - Kone Elevator Controller	57
iLEARN-iLEM Addendum - Otis 211/411 Elevator Controller	58

THE INFORMATION CONTAINED IN THIS DOCUMENT
IS THE EXCLUSIVE PROPERTY OF COMPREHENSIVE MANUFACTURING
SERVICES, LLC. d/b/a COURION. ANY REPRODUCTION OR
DISSEMINATION OF THE CONTENTS, DESIGNS OR IDEAS
CONTAINED HEREIN IS HEREBY PROHIBITED.
© COURION 2013

Introduction

Wire the hoistway and car according to COURION's Hoistway Wiring Diagrams. When possible, COURION's wiring diagrams, wire bundles, component wire terminals, and control designations are pre-numbered and color coded to facilitate ease of installation and trouble-shooting. Please pay close attention and follow COURION's pre-numbered system to insure a proper and trouble-free installation. Remember, wiring errors and loose connections lead to most control malfunctions during initial start-up and adjustment.

COURION's Next Generation System requires only one (1) iLEARN Door Control for Front and Rear Hoistway Openings and Front and Rear Car Gates. All functions of COURION's iLEARN Door Control are 100% factory tested to insure proper operation.

Hardware to mount the iLEARN Door Control enclosure to the machine room wall is included as Hardware Kit #120. One (1) kit is required for each enclosure. If transformers are required, hardware to mount the transformers is included as Hardware Kit #125. One (1) kit is required to mount each pair of transformers.

Machine Room Power Requirements

COURION's iLEARN Door Control requires a 110VAC power supply. COURION's Hoistway Equipment requires a 240 VAC 3-Phase power supply. A means to disconnect the supply power is generally required as part of the local electrical code. A disconnect switch with three (3) 15 AMP fuses should be provided by the General Contractor in the Machine Room.

IMPORTANT!

When the power supply exceeds 260VAC, COURION supplies two (2) single-phase step down transformers. These transformers should be mounted near the iLEARN Door Control. Two (2) single phase transformers are wired in a polyphase bank to provide three-phase voltage transformation.

Drawing 112673 (on the following page) illustrates typical transformer wiring. DO NOT USE ANY OTHER CONFIGURATION WHEN WIRING THE POLYPHASE TRANSFORMER BANK.

Wiring Diagram For Connecting Two Single Phase Dual Voltage Transformers as One Three Phase Open Delta Transformer

460/230 VAC - 30 - 60 Hz with 115 V Tap (if required)

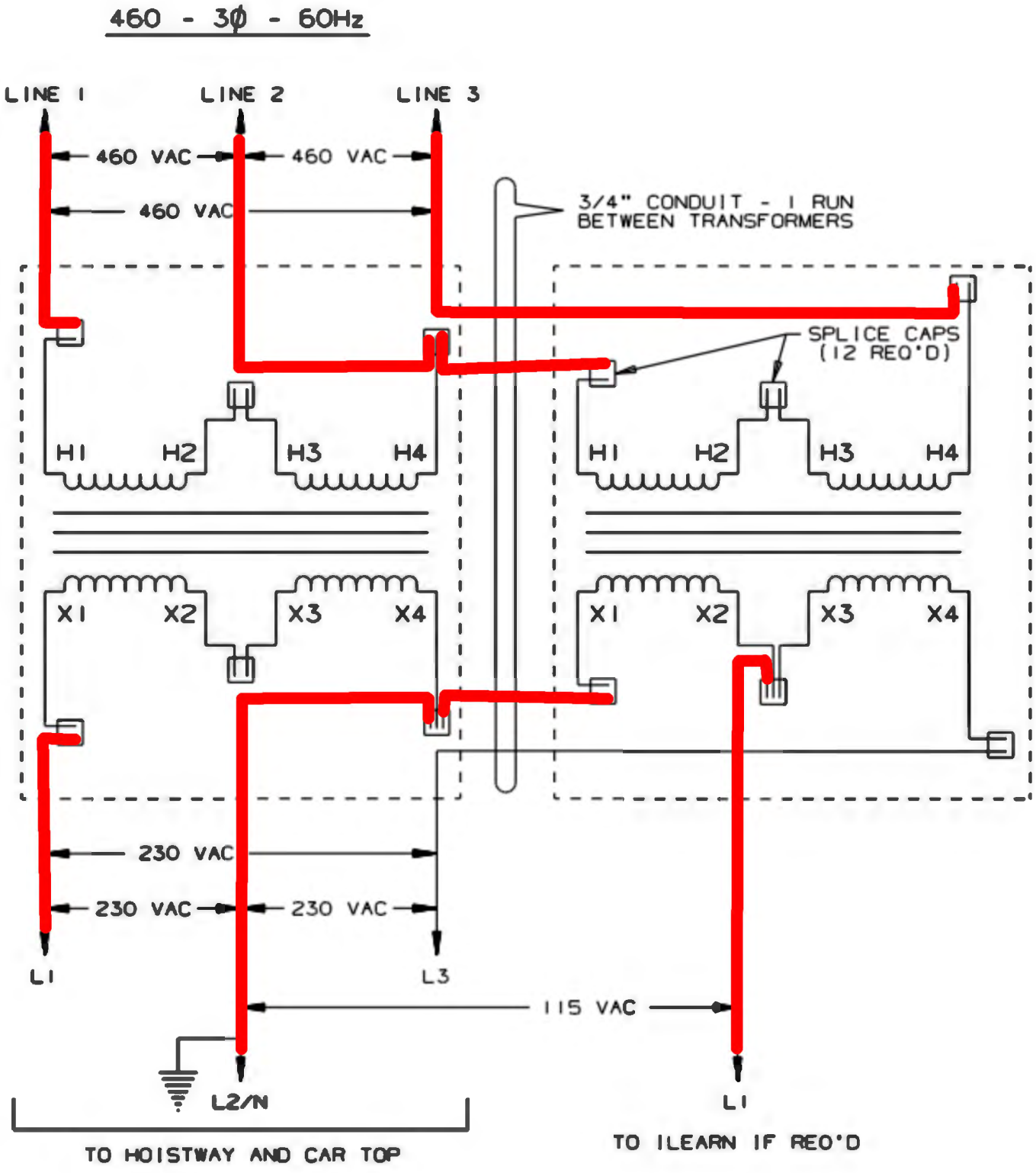

iWIRE Package Provided By Courion

COURION's Next Generation System includes the following pre-numbered and color-coded wiring bundles -

- **iWIRE Motor Wiring Bundle** (#90-947400) - Four (4) wire hoistway motor cable in an amount sufficient to wire the COURION Door Motors, Gate Drives, and Retiring Cam Motors to the iDRIVE VFD Controls located at each floor or car top.

- **iWIRE CANbus Cable** (#90-947405) - Two (2) twisted pair communication wires and a drain wire in an amount sufficient to wire the iLEARN Door Control to all iDRIVE VFD Floor an Gate Controls.

- **iWIRE Hoistway Cable** (#90-947409) - Five (5) shielded 16 AWG insulated power wires, one (1) yellow 18 AWG insulated wires for the CANbus Address In/Address Out Input, and three (3) black 18 AWG insulated wires as spares.

- **iWIRE Floor/Gate Wiring Bundle** (#90-947415) - Fifteen (15) 18 AWG insulated wires in an amount sufficient to wire the Door Push Buttons, EUDs, and Floor Zone Switches to the iDRIVE VFD Controls located at each floor or car top.

- **iWIRE Traveling Cable** (#90-947416) - Four (4) twisted pair shielded serial CANbus communication wires, five (5) 16 AWG insulated power wires, and three (3) 18 AWG insulated wires as spares.

- **iWIRE Interconnection Wiring Bundle** (#90-947423) - Three (3) 16 AWG insulated power wires, and twenty (20) 18 AWG insulated wires in an amount sufficient to run from COURION's iLEARN Door Control to the Elevator Control. When wiring the inter-control interface between COURION's iLEARN Door Control and the Elevator Control, please refer to the Elevator Control Wiring Schematics and COURION's Inter-control Interface Circuit Descriptions in this book for more details.

- **iWIRE Hoistway Junction Box, Traveling Cable Junction Box, and Two (2) Flat Traveling Cable Grips** (#01-929200 & #01-929201)

Interlock Wiring

Courion offers two different styles of Interlocks for its Freight Door Systems, depending on customer requirements and available hoistway space. The two types are: “Q” Style Interlocks and “P” Style Interlocks.

When wiring COURION’s “Q” Style Interlocks, refer to COURION’s Floor Wiring Diagram and the diagram on the inside of the interlock cover as an aid in identification of Door Closed, Floor Zone, and Door Locked contacts.

“Q” Style Interlock

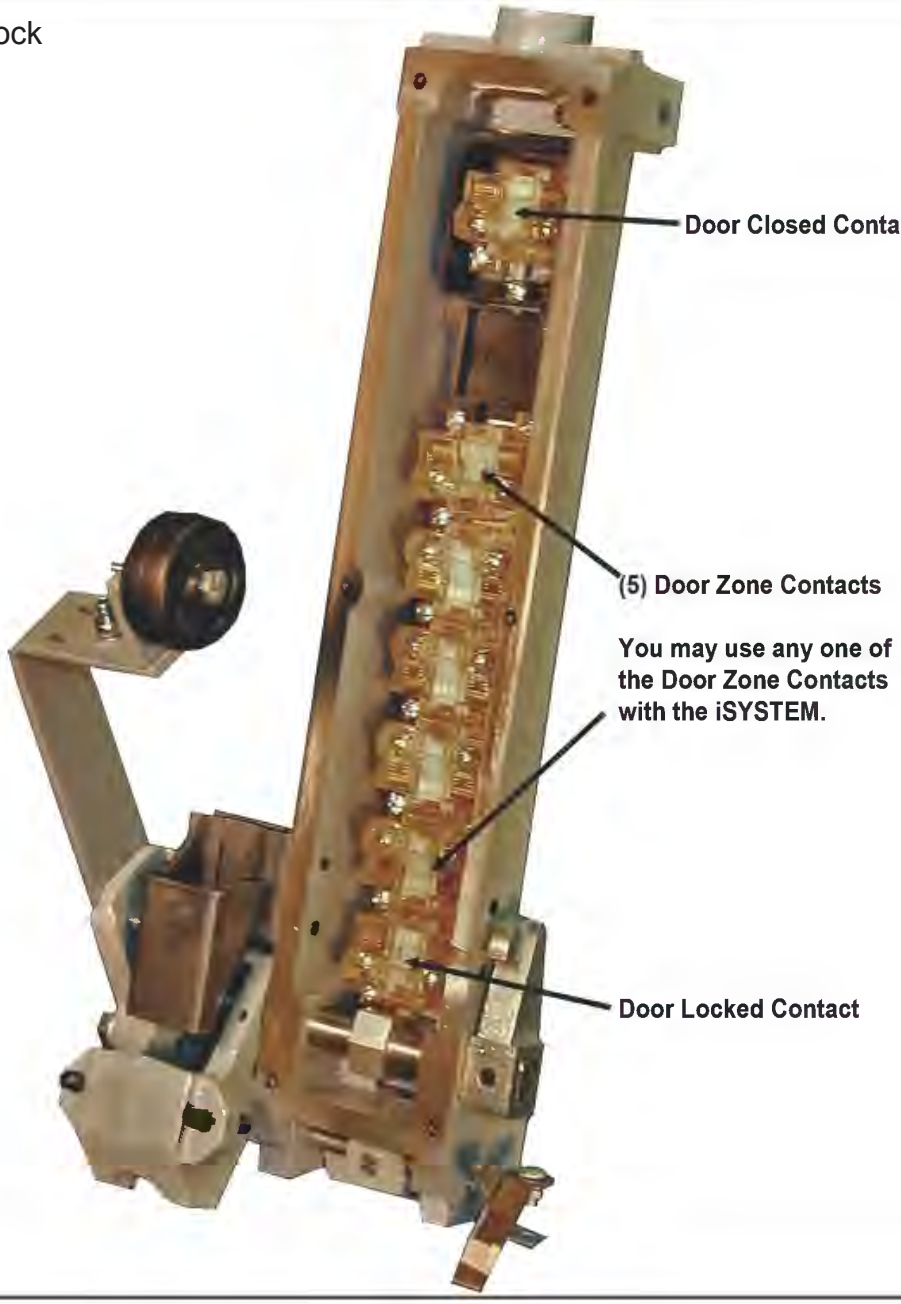

When wiring COURION's "PA" Style Interlocks, refer to the terminal cross reference on the PA Interlock connection diagram located below. Be sure to properly locate type "PAE" interlocks only at floors with emergency unlocking devices (also known as EUDs). After wiring the "PA" interlocks, check adjustment of the roller lever as indicated on the diagram located on the next page.

PA & PAE INTERLOCK WIRING DIAGRAM

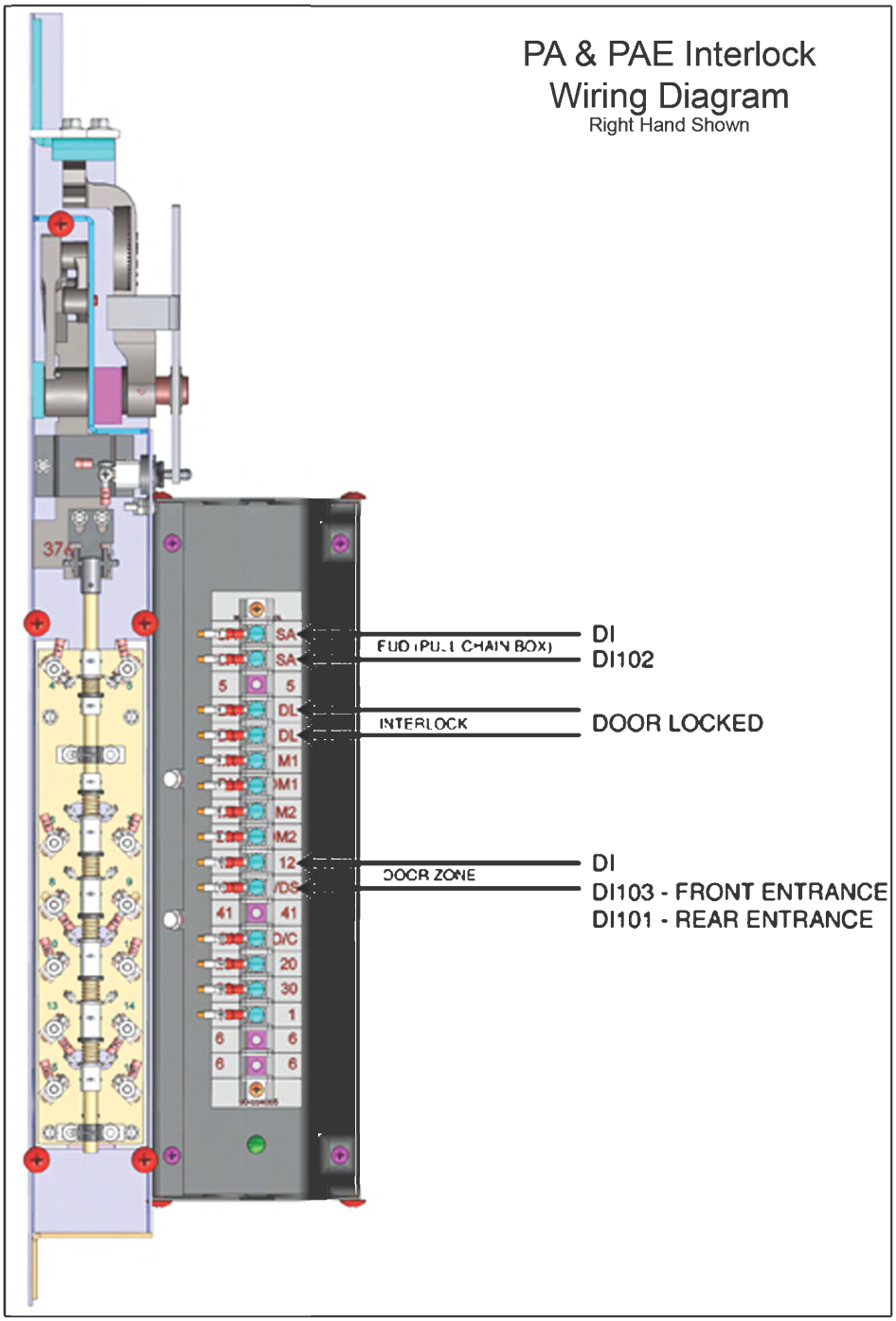

PA & PAE INTERLOCK
PO-70-3A

Contact Positions and Roller Arm Adjustment

PA and PAE Interlock

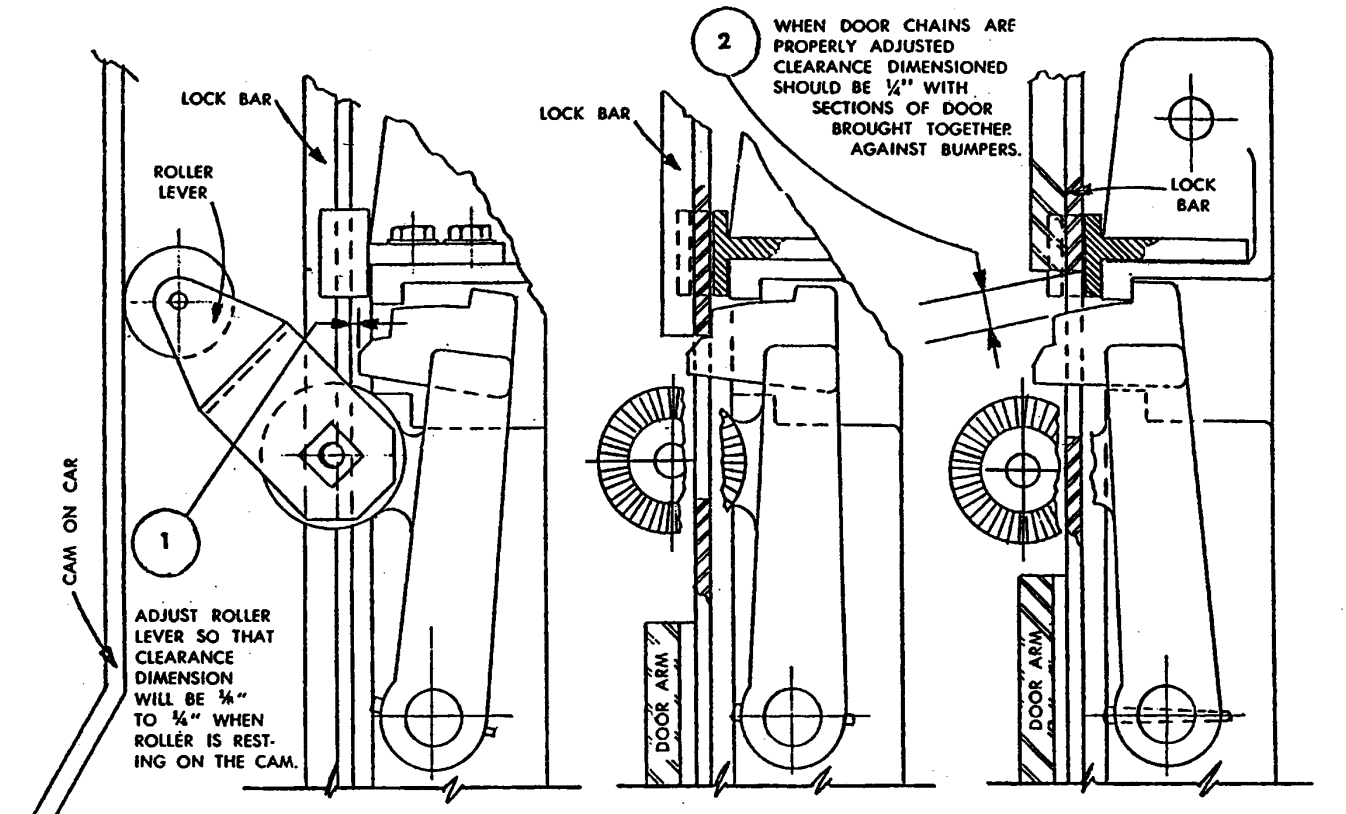

ABOVE - SIDE VIEW OF UPPER PART OF SWITCH.

BELOW - FRONT VIEW OF LOWER PART OF SWITCH.

TOP CONTACT IS FOR THE ELEVATOR DOOR INTERLOCK. IN TYPE "PA" SWITCHES THIS CONTACT IS MOVED BY THE LEVER. IN TYPE "PA-S" SWITCHES THIS CONTACT IS INDEPENDENT OF AND NOT AFFECTED BY THE LEVER MOVEMENT (See Gen'l. Wiring Diagram)

LOWER CONTACTS ARE FOR ZONING MOTORS AND OPERATOR EQUIPMENT. NUMBER OF CONTACTS VARIES DEPENDING ON TYPE OF ELEVATOR CONTROL.

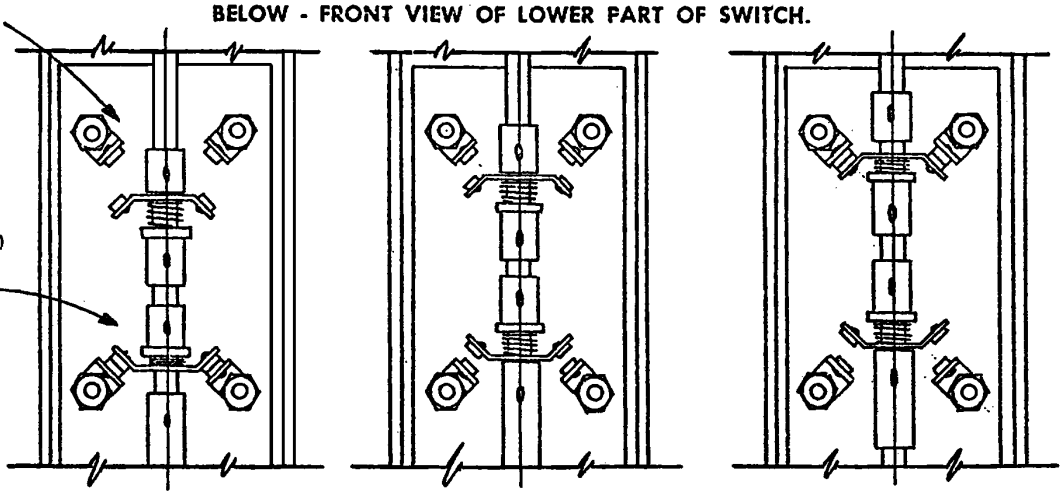

DOOR UNLOCKED
ELEVATOR CANNOT RUN DOOR OPERATOR CIRCUITS READY FOR OPERATING.

MID-LOCK POSITION
DOOR LOCKED - ELEVATOR CANNOT RUN - OPERATOR CANNOT FUNCTION.

DOOR LOCKED
INTERLOCK CLOSED - ELEVATOR CAN RUN - OPERATOR CANNOT FUNCTION.

Initial Startup and Adjustment

A. Insure that all Hoistway Doors and Car Gates are in the **FULL CLOSE** Position.

B. Ensure that you have correctly completed all of your hoistway and car top wiring per COURION's Wiring Diagrams and the iSYSTEM User's Manual. Most iSYSTEM malfunctions result from hoistway wiring errors or loose connections.

C. **DO NOT** complete the Elevator Control Interconnection until after completing the Initial Start-Up and Adjustment Steps.

D. Please make sure you have placed the following temporary jumpers on COURION's iLEARN Door Control - L1 to INS (Inspection), L1 to HPB (Hall Push Buttons), and L1 to FSH (Fire Service Phase-2 Hold). These jumpers will be removed after completing the interconnection interface with the Elevator Control after the Start-Up and Adjustment procedures are completed.

E. If your Push Button Fixtures (Hall and COP) do not include a STOP button, then you need to provide a permanent jumper between DI-Common and DIO4 - Stop Button at EACH iDRIVE VFD Floor Control and iDRIVE VFD Gate Control.

F. If you do not have an Emergency Unlocking Device at a particular floor, you need to provide a permanent jumper between DI-Common and DI02 - EUD at EACH iDRIVE VFD Floor Control where there is no EUD.

1. iLEARN Startup Wizard

a. Power up the 240 VAC Hoistway Power and 110 VAC to the iLEARN Door Control. The iLEARN Door Control will automatically boot up to the STARTUP WIZARD screen. If it does not boot to the STARTUP WIZARD, use the SELECT/MENU Knob on the iLEARN Door Control to scroll to the # of iDRIVE Parameter under EDIT PARAMETER Menu Item and change the number of iDRIVEs to 0. Restart the System.

STARTUP WIZARD Screen - Press SELECT/MENU Knob to continue.

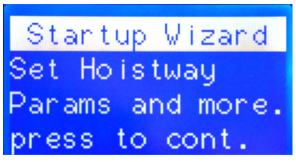

b. Enter the **# of Hoistway iDRIVE**s (both front and rear openings) in your hoistway.

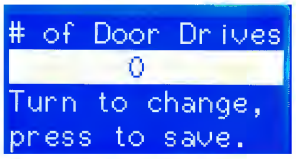

c. Enter the **# of Car Gates** (1 or 2) in your hoistway. System Default = 0.

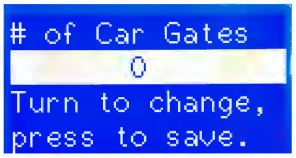

d. Enter the **Car Top Control Type** (iDRIVE.G or iDRIVE.PLC). See label on Car Top Control Enclosure for Car Top Control Type.

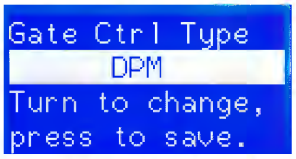

e. Enter the **# of Car Stations** (1 or 2) in your hoistway. System Default = 2.

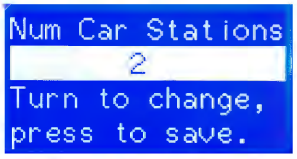

f. Enter Gate Travel (generally the height of your Opening). System Default = 96”.

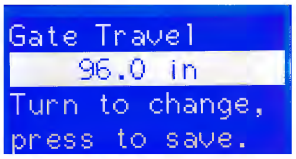

g. Set the correct Time and Date for your System.

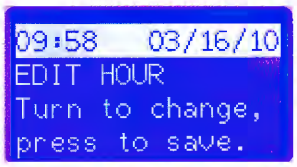

h. If you have entered 1 or 2 Car Gates during Step #9 above, then select Yes to set up the FULL OPEN and FULL CLOSE position for your Front and Rear Gate.



i. Close the Front (Rear) Gate and push the COP Close Button.

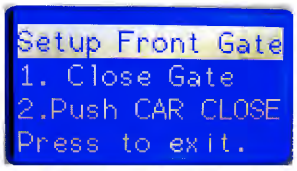

j. Open the Front (Rear) Gate and push the COP Open Button.

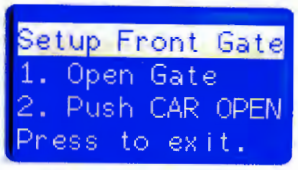

The iDRIVE.G Car Top Control Box now has set your FULL OPEN and FULL Close position.

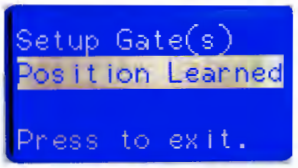

Using the MENU/SELECT Button, Exit back to the Main Screen.

IMPORTANT! ***iLEARN Door Control Parameters and iDRIVE VFD Door Control Parameters are not SAVED until the system is restarted - please proceed to SYSTEM RESTART.***

2. System Restart

a. Using the MENU/SELECT knob, turn and select DIAGNOSTICS.

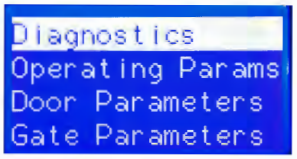

b. Select RESTART SYSTEM

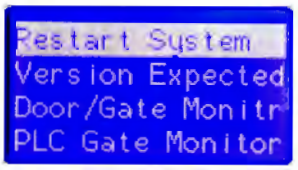

c. Turn MENU/SELECT knob to indicate YES and then push to restart your COURION System.

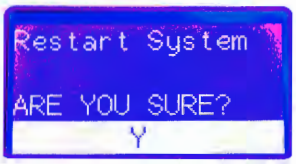

Boot Screen - During the reboot process, COURION's iLEARN Door Control will establish communication with each of your iDRIVE VFD Floor Controls. The number of iDRIVEs found should equal the number of iDRIVEs expected.



NOTE: If there is a discrepancy between the number of iDRIVEs found and expected, **DO NOT GO TO THE NEXT STEP**. Proceed to the **TROUBLESHOOTING and ERROR MESSAGES** Section of this Manual.

COURION Logo Screen - Press the MENU/SELECT Button.

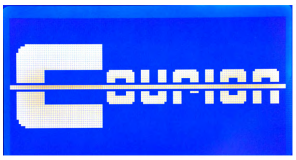

System Status Screen - System OK

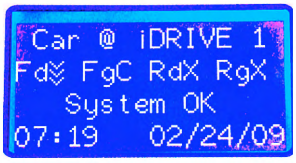

NOTE: If this screen indicates something other than SYSTEM OK, please proceed to the **TROUBLESHOOTING and ERROR MESSAGES** Section at the back of this Manual.

If you received an iSYSTEM Software Update Kit with your order, update the iLEARN Door Control and iDRIVE software by following the instructions in Courion's iSYSTEM Software Update Manual.

After successfully updating the iSYSTEM Software, re-cycle the iLEARN Door Control power (110 VAC) and iDRIVE Hoistway power (240 VAC).

3. Initial Operation

a. Insure that all of the Hoistway Doors and Car Gates are in the **FULL CLOSE** Position.

b. Utilizing the Hall or Car Station Push Buttons, open and close the Hoistway Doors.

To ADJUST the Hoistway Door(s) Operation (if required), press the MENU/SELECT Button and turn to DOOR PARAMETERS.

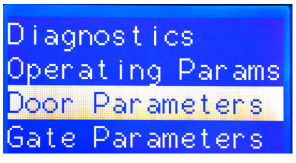

Scroll Down to Item **2.5 Slowdown Distance** (Default = 8.0”) and adjust to meet your site requirements. This is the distance away from FULL OPEN and FULL CLOSE where the door speed will change from “Fast” to “Slow”, as set by the iLEARN Control

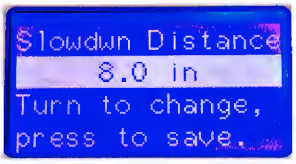

Scroll Down to Item **2.6 Creep Distance** (Default = 3.0”) and adjust to meet your site requirements. This is the distance away from FULL OPEN and FULL CLOSE where the door speed will change from “Slow” to “Creep”, as set by the iLEARN Control.

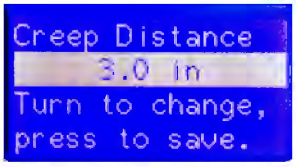

To ADJUST the Car Gate Operation (if required), press the MENU/SELECT Button and turn to GATE PARAMETERS.

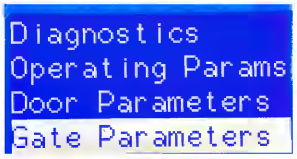

Scroll Down to item **4.6 Car Gate Slowdown** (Default = 15”). This is the distance away from FULL OPEN and FULL CLOSE where the car gate speed will change from “Fast” to “Slow”, as set by the Gate iDRIVE.G.

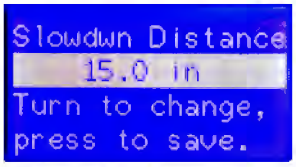

Scroll Down to Item **4.7 Creep Distance** (Default = 3”). This is the distance away from FULL OPEN and FULL CLOSE where the car gate speed will change from “Slow” to “Creep”

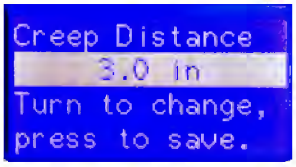

If your Hoistway Doors or Car Gate(s) do not operate properly during the initial operation, please proceed to the ***TROUBLESHOOTING and ERROR MESSAGE*** Section at the back of this Manual.

iLEARN Door Control

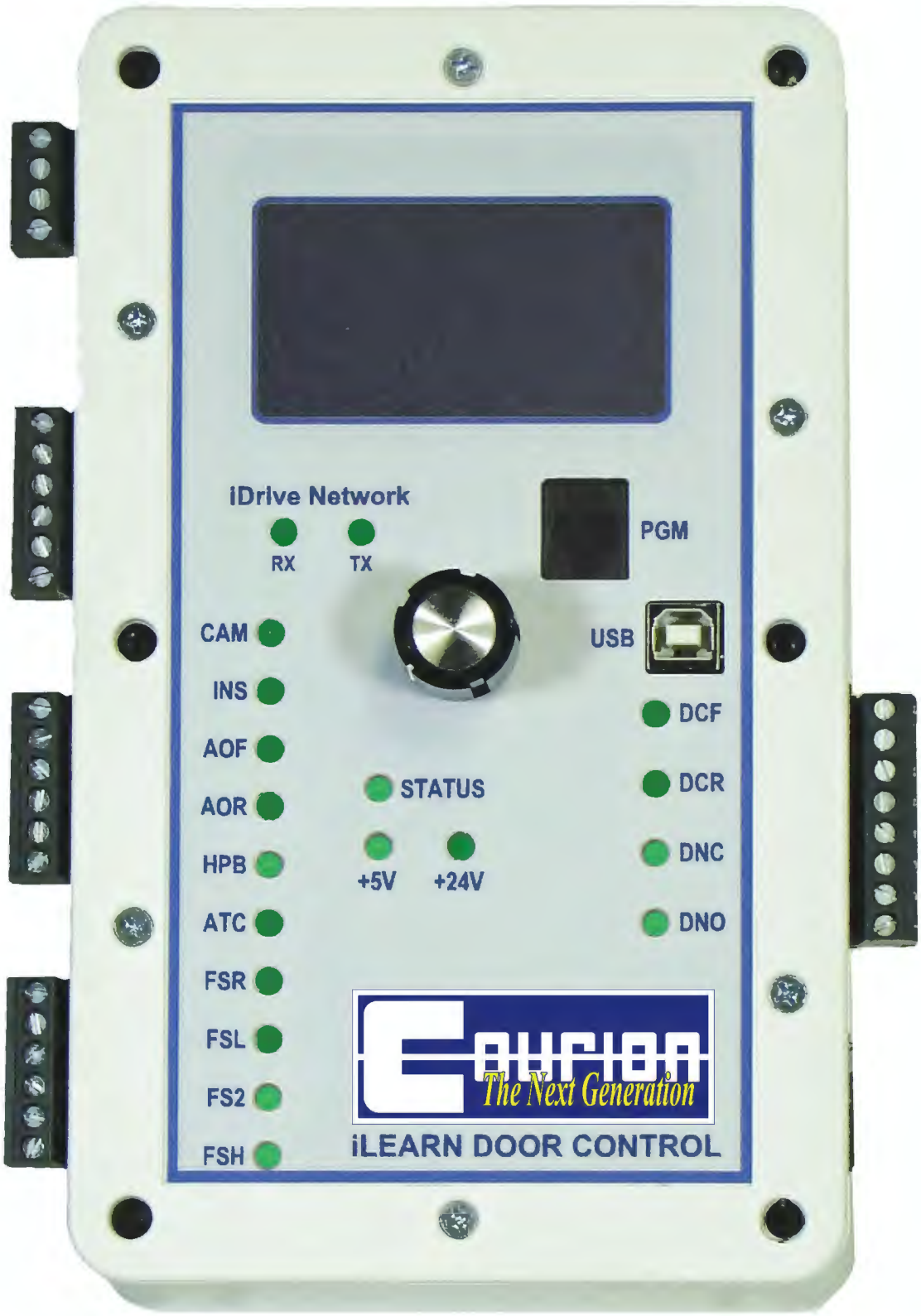

iLEARN Door Control Description

SELECT/MENU Knob - The Select/Menu Knob is used to scroll through (turn) and select (push) Menu Items on the iLEARN Display. After making a change in the Menu, the change is saved to the iLEARN Control when you push the SELECT/MENU Knob.

IMPORTANT - Changes made on the iLEARN Door Control to the iDRIVE Parameters (Section 4 - Edit Parameters) will not be saved to the hoistway iDRIVEs until the System is restarted.

See the iLEARN Door Control Menu Screens Section of this Manual for further information.

USB Port - The USB Port is used to update the iLEARN and iDRIVE programs. It can also be used to download the Event History captured by the iLEARN Door Control to a USB device.

SCADA CAN Port - This port allows the iLEARN Door Control to connect directly to an Elevator Controller's CAN port rather than using the AC inputs and relay outputs described below.

iDRIVE Network LEDs (RX & TX) - These LEDs indicate the receipt (RX/Red) and transmission (TX/Green) of information over the CANbus network between the iLEARN Door Control and the iDRIVE units on the network. During normal operation, these LEDs should be rapidly flashing. If both lights are not rapidly flashing, there is a communication error on the CANbus network that needs to be resolved - ***See the Troubleshooting and Error Message Section of this Manual***.

STATUS LED - This LED indicates the overall STATUS of your COURION System.

1 Flash Per Second - System is Ready with normal operation
2 Flashes Per Second - Active iDRIVE Fault on the CANbus Network
3 Flashes Per Second - Memory Failure
4 Flashes Per Second - CAN Controller Failure

If the STATUS LED is something other than 1 Flash Per Second - ***See the Troubleshooting and Error Message Section of this Manual.***

+5V & +24V LEDS - These LEDs indicate that the iLEARN Control has the necessary power for the CANbus Network and Digital Inputs. These LEDs should be constantly ON.

Inter-Control Interface Circuit Descriptions

CAM - Retiring Cam - [J11:1 - J9:1] The CAM circuit is a NORMALLY OPEN circuit closed when the car is ready to answer a call. Closing this circuit retires the CAM. This circuit must not be dependent on the door interlock circuit, as the door interlock circuit is not complete until the CAM has retired and the doors have been locked.

INS - Inspection - [J11:1 - J9:2] The INS (or Door/Gate Cut-Out) is a NORMALLY CLOSED circuit opened when door or gate operation is undesirable. The circuit is typically opened when:

1. The Lift is operated in INSPECTION mode.
2. The PIT STOP SWITCH is actuated.
3. The car EMERGENCY STOP button is actuated.

AOF - Auto Open (Front) - [J11:1 - J9:3] The AOF circuit is a NORMALLY OPEN circuit momentarily closed to initiate door and gate opening after the car has leveled at a floor. This circuit should be open when the doors have fully opened. This circuit should momentarily reclose in response to a call registered at the floor where the car is already present. This circuit initiates door and gate opening for FRONT entrances only. Auto Open is ignored when the elevator is on Fire Service-Phase 2 operation.

AOR - Auto Open (Rear) - [J11:1 - J9:4] The AOR circuit is a NORMALLY OPEN circuit and functions just like the AOF circuit, except this circuit initiates door and gate opening for REAR entrances only. Auto Open is ignored when the elevator is on Fire Service-Phase 2 operation.

HPB - Hall Push Buttons - [J11:1 - J9:5] The HPB circuit is a NORMALLY CLOSED circuit opened to disable corridor door OPEN and CLOSE buttons. This circuit must be opened on Firefighter's Service Phase 2 operation except during the transition from Phase 2 to Phase 1 operation. This circuit may be opened during ATTENDANT operation.

ATC - Auto Time Close - [J11:1 - J8:1] The ATC circuit is a NORMALLY CLOSED circuit opened to prevent Automatic Timed Closing of the freight elevator doors. This circuit must be opened when the car has arrived at the designated recall landing during Firefighter's Service Phase 1 Recall Operation. This circuit is disabled when the Fireman's in-car key switch is set to the ON position.

This circuit may also be opened during ATTENDANT operation of the lift to prevent Automatic Timed Closing of the freight doors. This circuit may be left open indefinitely if Automatic Timed Closing is not desired.

FSR - Fire Service Recall - [J11:1 - J8:2] The FSR circuit is a NORMALLY OPEN circuit momentarily closed to initiate door and gate closing when required during a Phase 1 Emergency Recall Operation. This circuit must be opened when the car arrives at the designated recall landing. This circuit is disabled when the Fireman's in-car key switch is set to the ON position.

FSL - Fire Service Landing - [J11:1 - J8:3] The FSL circuit is a NORMALLY OPEN circuit closed when the car is parked at the designated recall landing during Firefighter's Emergency Operation Phase 1 and 2.

FS2 - Fire Service Phase 2 - [l:11-1 - J8:4] The FS2 circuit is a NORMALLY OPEN circuit closed only when the Fireman's in-car key switch is set to the ON position. Please refer to ASME A17.1, Rule 211.3c (2000) or Rule 2.27.3.3 (2002 or later) for a complete description of Firefighter's Service Phase 2 Emergency In-Car Operation.

FSH - Fire Service Phase 2 Hold - [J11:1 - J8:5] The FSH circuit is a NORMALLY CLOSED circuit opened when the Fireman's in-car key switch is set to the HOLD position.

During Firefighter's Service Phase 2 Emergency Operation, the Fireman's in-car key switch is placed in the OFF position, the car is not at the designated level, and Phase 1 Operation is not in effect, this circuit must open to disable the CLOSE push button and allow the door and car gate to open.

DCF - Doors Closed Front - [J10:8 - J10:7] The Doors Closed Front circuit is a NORMALLY OPEN relay that closes when all FRONT doors are in the closed position and the power close function is complete.

DCR - Doors Closed Rear - [J10:6 - J10:5] The Doors Closed Rear circuit is a NORMALLY OPEN relay that closes when all REAR doors are in the closed position and the power close function is complete. This circuit will be open if there are no rear doors.

NOTE: Both the Doors Closed Front and Doors Closed Rear circuits will be OPEN if no power is supplied to the iLEARN Door Control.

DNC - Door Not Closed - [J10:4 - J10:3] The Door Not Closed circuit is a NORMALLY OPEN relay that closes when the active door and/or car gate is not in the closed position. Doors are considered closed when they are within 3" of FULL CLOSE. This circuit may be used to sound a door open bell in response to a call.

DNO - Door Not Open - [J10:2 - J10:1] The Door Not Open circuit is a NORMALLY OPEN relay that closes to indicate that the active door OR car gate is in the FULLY OPEN POSITION. This circuit may be used to signal the Lift Control to re-activate Firefighters Emergency Operation Phase 2 Hold when required.

SPECIAL NOTES:

Firefighter's Emergency Operation Phase 2 to Phase 1 Transition - During the transition from Firefighter's Service Phase 2 to Phase 1 Operation, and when the lift is not at the designated recall landing and the doors are not closing, the following special conditions apply:

- Reactivate Hall Push Buttons [J11:1 - J9:5] The Hall Push Buttons must be active during the transition. This circuit must be reopened when either Phase 1 Operation is resumed or Phase 2 Operation is reactivated.

- Reactivate Phase 2 Operation or Hold [J11:1 - J8:5] If the Firefighter's in-car key switch is turned from OFF to either HOLD or ON during the transition from Phase 2 to Phase 1 Operation while the doors are closing, the closing cycle must be interrupted and the door and car gate reopened. The re-open sequence is accomplished by opening the normally closed HOLD circuit between J11:1 and J8:5 to break the closing cycle and establish the reopen cycle. The normally closed HOLD circuit may be reestablished when the door and gate have fully opened as indicated by the Doors Not Closed circuit J10:2 - J10:1. The Firefighter's Emergency Operation Phase 2 circuit (J11:1 - J8:4) should remain closed until Phase 1 Operation is resumed following the transition.

PLEASE NOTE!

Instructions on the use of the COURION iLEARN Door Control circuits during Firefighter's Emergency Operation and transition are not intended to be inclusive. Please refer to ASME A17.1 Rule 211.3 (2000) or Rule 2.27.3 (2002 and later) for a complete description of the performance requirements.

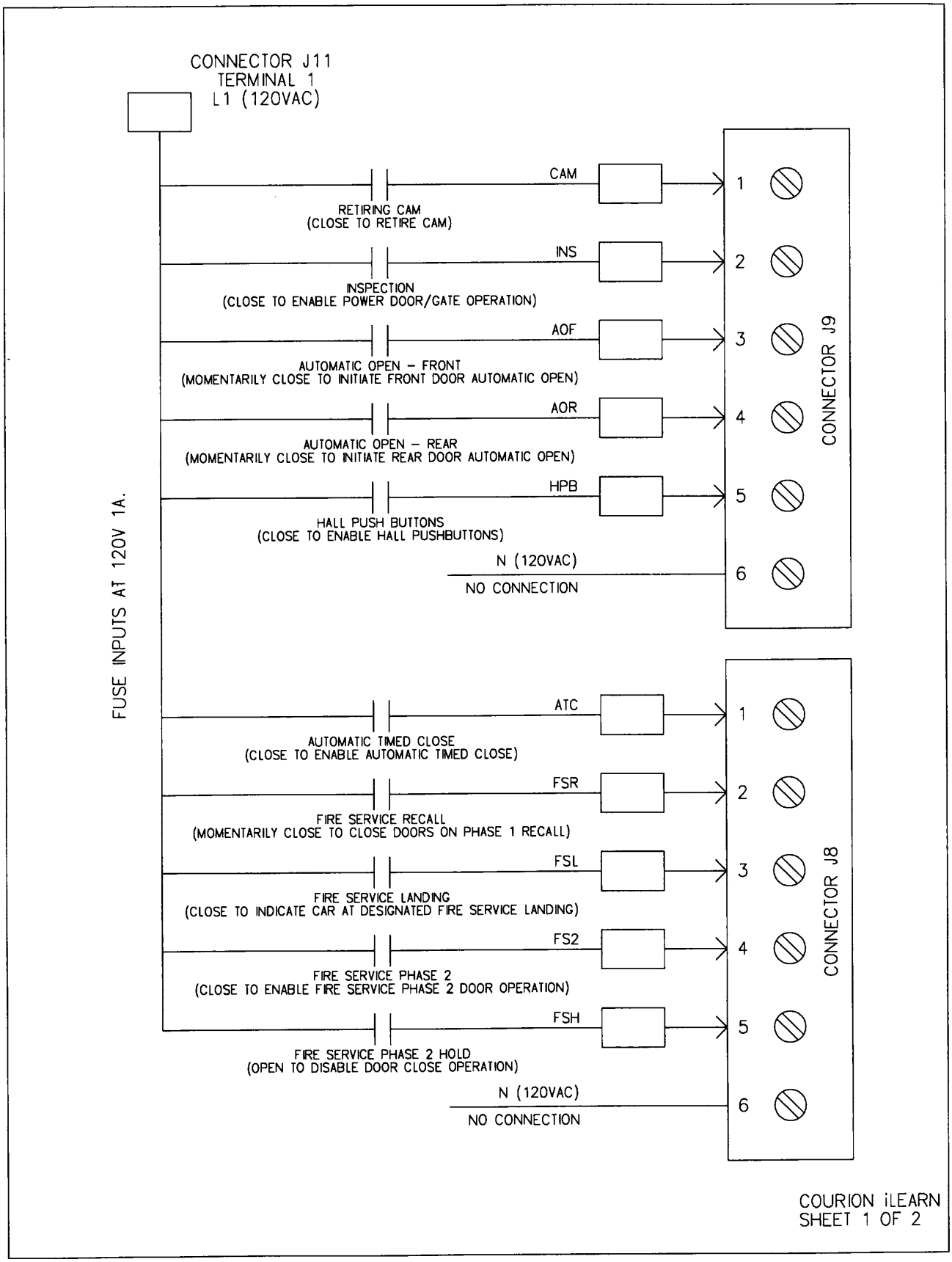
CONNECTOR J11
TERMINAL 1
L1 (120VAC)
FUSE INPUTS AT 120V 1A.
CAM
RETIRING CAM
(CLOSE TO RETIRE CAM)
INS
INSPECTION
(CLOSE TO ENABLE POWER DOOR/GATE OPERATION)
AOF
AUTOMATIC OPEN – FRONT
(MOMENTARILY CLOSE TO INITIATE FRONT DOOR AUTOMATIC OPEN)
AOR
AUTOMATIC OPEN – REAR
(MOMENTARILY CLOSE TO INITIATE REAR DOOR AUTOMATIC OPEN)
HPB
HALL PUSH BUTTONS
(CLOSE TO ENABLE HALL PUSHBUTTONS)
N (120VAC)
NO CONNECTION
1
2
3
4
5
6
CONNECTOR J9
ATC
AUTOMATIC TIMED CLOSE
(CLOSE TO ENABLE AUTOMATIC TIMED CLOSE)
FSR
FIRE SERVICE RECALL
(MOMENTARILY CLOSE TO CLOSE DOORS ON PHASE 1 RECALL)
FSL
FIRE SERVICE LANDING
(CLOSE TO INDICATE CAR AT DESIGNATED FIRE SERVICE LANDING)
FS2
FIRE SERVICE PHASE 2
(CLOSE TO ENABLE FIRE SERVICE PHASE 2 DOOR OPERATION)
FSH
FIRE SERVICE PHASE 2 HOLD
(OPEN TO DISABLE DOOR CLOSE OPERATION)
N (120VAC)
NO CONNECTION
1
2
3
4
5
6
CONNECTOR J8
COURION iLEARN
SHEET 1 OF 2

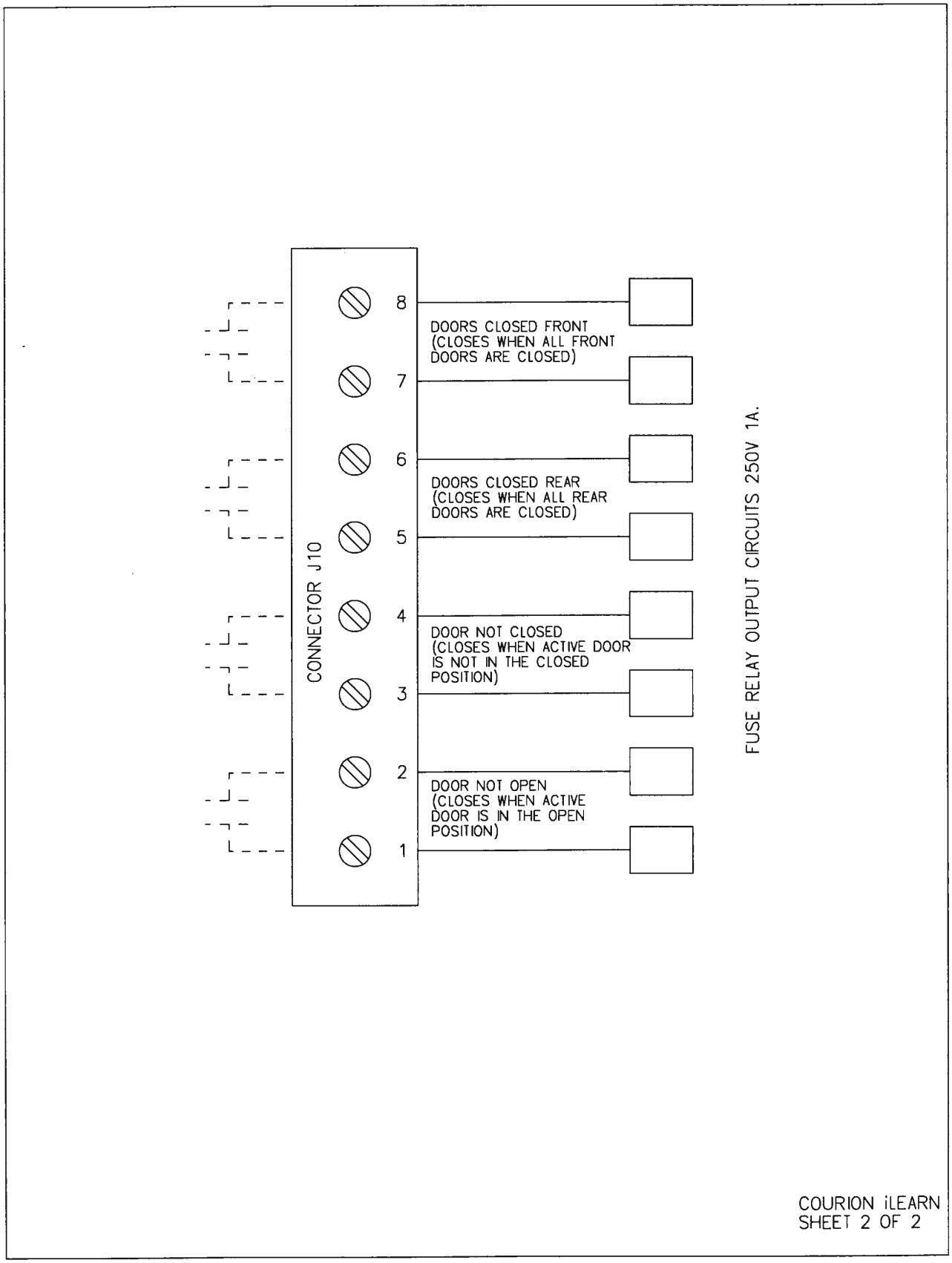
CONNECTOR J10
8
7
6
5
4
3
2
1
DOORS CLOSED FRONT
(CLOSES WHEN ALL FRONT
DOORS ARE CLOSED)
DOORS CLOSED REAR
(CLOSES WHEN ALL REAR
DOORS ARE CLOSED)
DOOR NOT CLOSED
(CLOSES WHEN ACTIVE DOOR
IS NOT IN THE CLOSED
POSITION)
DOOR NOT OPEN
(CLOSES WHEN ACTIVE
DOOR IS IN THE OPEN
POSITION)
FUSE RELAY OUTPUT CIRCUITS 250V 1A.
COURION iLEARN
SHEET 2 OF 2

iLEARN Door Control Menu

System Boot Screen - If the # of iDRIVEs found does not equal the # of iDRIVEs expected (as entered during the Start-Up Wizard), then the hoistway doors will not operate under power until the problem is corrected.

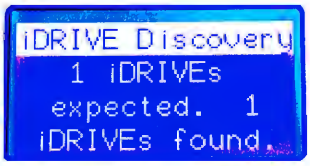

COURION Logo Screen - Press the MENU/Select Knob to proceed.



System Status Screen - Top line indicates the position of the Car as it relates to a particular iDRIVE VFD Floor Control. iDRIVE units are numbered based on the position along COURION's CANbus network.

The second line indicates the status and movement direction of the Front Doors (Fd), Front Gate (Fg), Rear Doors (Rd), and Rear Gate (Rg). Arrows indicate the direction of movement, 'O' represents Open, and 'C' represents Closed.

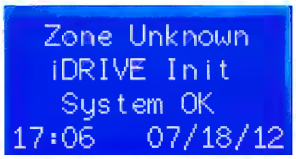

The third line indicates the status of the overall system - an error code will appear on this line when applicable and line 4 will indicate the error message. For further details regarding error messages, please proceed to the **Troubleshooting and Error Messages** Section at the back of this Manual for further details.

Diagnostics

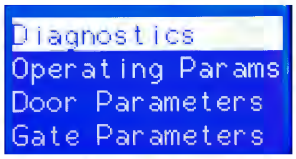

1.1 Restart System - (Yes or No) This performs a software reset of all door iDRIVES and the iLEARN. Gate controllers are not reset with this command.

1.2 Version Expected - This displays the actual loaded iLEARN firmware and the EXPECTED iDRIVE firmware version. If any iDRIVE reports a version different than this one, it will be locked out until the appropriate software version is installed.

1.3 Door Monitor - The Door Monitor can be used to inspect any of the iDRIVEs on the CANbus Network. These registers are read-only and come from the selected iDrive. Do not confuse them with Parameters that can be manipulated by the iLearn. These items are only for diagnosing iDrive issues. Below are the most often used Menu Items under the Door Monitor Section. The remainder of the Menu Items are Described in the iLEARN Menu Supplement.

iLEARN Door Control Menu Screens (continued)

NOTE: Using the MENU/Select Knob, select the appropriate iDRIVE VFD Control. iDRIVE Unit Addresses (e.g. 01, 02, 03) correspond to their position on your COURION CANbus Network.

1.3.1 Comm Rate - This is the number of good command/reply transactions between the iLearn and this drive in the last second. Approximately 240 transactions per second are shared by all slaves on the network. For example, if there are 6 door openings and 2 car gates, this number would be around 30 for a noise free network.

1.3.2 Open iSENSOR Flags - 07 – This bit indicates the last detected direction of motion. '1' indicates that the door magnet is moving TOWARDS the Open iSENSOR (Open Direction); '0' indicates that the door magnet is moving AWAY from the Open iSENSOR (Close Direction).

1.3.3 Open iSENSOR Position - Used to indicate door position relative to FULL OPEN. This is not done initially because these values are relative to door position when the iSENSORs are powered up. If powered up at FULL OPEN, then the position will be near 12".

1.3.4 Full Open Position - This is the value of the "Open iSENSOR Position" register where the door stalls in the open position.

1.3.5 Open iSENSOR Speed - This is actually the period between alternating poles. It is non-zero when the magnet is moving over the sensor and zero when the magnet is not moving.

1.3.6 Close iSENSOR Flags - 07 – This bit indicates the last detected direction of motion. '1' indicates that the door magnet is moving TOWARDS the Closed iSENSOR (Close Direction); '0' indicates that the door magnet is moving AWAY from the Close iSENSOR (Open Direction).

1.3.7 Close iSENSOR Position - Used to indicate door position relative to FULL CLOSE. This is not done initially because these values are relative to door position when the iSENSORs are powered up. If powered up at FULL OPEN, then the position will be near 0".

1.3.8 Close Limit Position - This is the value of the "Close iSENSOR Position" register where the door stalls in the closed position.

1.3.9 Close iSENSOR Speed - This is actually the period between alternating poles. It is non-zero when the magnet is moving over the sensor and zero when the magnet is not moving.

1.3.10 Digital Inputs (iDRIVE VFD Control) - These bits represent the state of the digital inputs presented to the iDrive. A '1' indicates a CLOSED circuit. A '0' represents an OPEN circuit.

06 - Request For Address - is provided by the previous iDRIVE or iLEARN in the network

iLEARN Door Control Menu Screens (continued)

07 - Open Hall Button (NO)

08 - Interlock Zone - Rear (NO)

09 - EUD (NC)

10 - Interlock Zone - Front (NO)

11 - Stop Hall Button (NC)

12 - Close Hall Button (NO)

1.3.11 Door Status Bits

01 - Init – Set to '0' until both iSensors have learned their stall position. Set to '1' when both have seen stall.

02 - Run – See "Motor Control Bits/Run"

03 - Reset – Set to '1' when drive powers on. Set to '0' upon first door operation command.

04 - EEPROM OK – Set to '1' when non-volatile memory is determined to contain good parameter data. Set to '0' when parameters are bad, and locks out operation.

05 - Fault – This is a "catchall" and is set during any fault condition (iSensor OK = '0' or 6 - Timeout = '1' or EEPROM good = '0')

06 - Timeout – Indicates a stall condition was not detected in the maximum time allotted (60 seconds).

07 - iSensor OK – Indicates iSensors are functioning. A '0' indicates an iSensor problem.

08 - Excessive Stall Correction - Set when updated stall position exceeds 1" from the last one.

09 - Full Close – Set when within ¾" of full close stall position.

10 - Full Open – Set when within ¾" of full open stall position.

11 - Almost Closed – Set when the door magnet is over the Close iSensor (the upper one).

12 - Almost Open – Set when the door magnet is over the Open iSensor (the lower one).

iLEARN Door Control Menu Screens (continued)

13 - Moving – Set when the doors are in motion.

14 - Close Stall – Set during a close cycle when the stall is detected.

15 - Open Stall – Set during an open cycle when the stall is detected.

16 - Ready – Indication that the iDrive is ready to receive commands from the iLearn.

1.3.12 Motor Control Bits

03 - Reg Out Test – Factory use. Should be '0' in normal operation.

04 - Max volts – '1' indicates that the maximum rate of change algorithm is being utilized instead of the settable ROC parameter. This is in place for emergency acceleration/deceleration needs and is not presently used. Should be '0' in normal operation.

05 - Max ROC – '1' indicates that the maximum rate of change algorithm is being utilized instead of the settable ROC parameter. This is in place for emergency acceleration/deceleration needs and is not presently used. Should be '0' in normal operation.

06 - Direction command. '1' = close, '0' = open.

07 - Run – Run command - '1' indicates motor controller is being commanded to run. '0' means stop.

08 - Control place – Factory use. Should be '0' in normal operation.

1.3.13 Motor Status Bits

06 - '1' = close, '0' = open.

07 - Run '1' indicates inverter is generating an output, and motor should be running.

1.3.14 Motor Fault Bits

03 - '1' = heat sink temperature sensor measured over 100 degrees Celsious. Should be '0' in normal operation.

04 - '1' = motor control parameters are out of range when the motor was commanded to run. Should be '0' in normal operation.

05 - '1' = overcurrent condition (>12.5A) has been detected by the control software. Should be '0' in normal operation.

iLEARN Door Control Menu Screens (continued)

06 - '1' = DC bus voltage fell below 75V while the motor was commended to run. Should be '0' in normal operation.

07 - '1' = DC bus voltage has exceeded 450V. Should be '0' in normal operation.

08 - '1' = overcurrent (>15A) condition has been detected by the inverter circuit. Should be '0' in normal operation.

1.3.15 Door Command Bits

03 Run - '1' = iLEARN is commanding the hoistway doors to Run.

04 MIA/B/C - A 3-bit software motion interlock. The iLEARN must set these to '010' otherwise Run, Open, and Close Command are ignored

07 Open - '1' = iLEARN is commanding the iDRIVE to OPEN the hoistway doors. This command bit is ignored unless 03 Run = '1'.

08 Close - '1' = iLEARN is commanding the iDRIVE to CLOSE the hoistway doors. This command bit is ignored unless 03 Run = '1'

1.3.49 Firmware Version - This is the actual version of firmware loaded in the iDrives.

1.4 Gate Monitor - The Gate Monitor can be used to inspect any of the Car Top Gate iDRIVEs on the CANbus Network. These registers are read-only and come from the selected Car top iDrive. Do not confuse them with parameters that can be manipulated by the iLearn. These items are only for diagnosing iDrive issues. Below are the most often used Menu Items under the Door Monitor Section. The remainder of the Menu Items are Described in the iLEARN Menu Supplement.

NOTE: Using the MENU/Select Knob, select the appropriate iDRIVE VFD Control. iDRIVE Unit Addresses correspond to their position on your COURION CANbus Network.

Front Gate Address = iDRIVE 126 Rear Gate Address = iDRIVE 127

1.4.1 Comm Rate - This is the number of good command/reply transactions between the iLearn and this drive in the last second. Approximately 240 transactions per second are shared by all slaves on the network. For example, if there are 6 door openings and 2 car gates, this number would be around 30 for a noise free network.

1.4.2 Gate Position - This is the current encoder reading

iLEARN Door Control Menu Screens (continued)

1.4.3 Gate Digital Inputs

02 - Encoder Preset Feedback

07 - Car Station Reset Button

08 - Rear Gate Selection

1.4.4 Gate Digital Outputs

02 - Encoder Preset Command

04 - Gate Not Open

05 - Retiring Cam

06 - Light Curtain Test

07 - Strobe Light

08 - Buzzer

1.4.5 Gate Open Position - This is the FULL OPEN encoder reading for the Gate Panel after the iSYSTEM and gone through its “learn” sequence.

1.4.6 Gate Status Bits #1

01 - Close Button - ‘1’ when COP Close Button is pushed.

02 - Open Button - ‘1’ when COP Open Button is pushed.

03 - Light Curtain #2 Fault - ‘1’ when Light Curtain #2 reports a fault.

04 - Light Curtain #1 Fault - ‘1’ when Light Curtain #1 reports a fault.

05 - General Fault - ‘1’ when iDRIVE.G is reporting a general fault.

06 - Motor Fault - ‘1’ when iDRIVE.G is reporting a motor fault.

07 - Light Curtain #2 Reverse - ‘1’ when Light Curtain #2 causes a reversal.

08 - Light Curtain #1 Reverse - ‘1’ when Light Curtain #1 causes a reversal.

09 - Reversing Edge - ‘1’ when Reversing Edge causes a reversal.

10 - Reversing Event Latch - ‘1’ when any reversing event is detected.

11 - Gate actively Closing (or holding close) - ‘1’ when Gate is Closing.

12 - Gate actively Opening - ‘1’ when Gate is Opening

13 - Almost Closed - ‘1’ when Gate is within 12” of Full Close.

14 - Almost Open - ‘1’ when Gate is within 12” of Full Open.

15 - Fully Closed - ‘1’ when Gate is within 1” of Full Close.

16 - Fully Open - ‘1’ when Gate is within 1” of Full Open.

iLEARN Door Control Menu Screens (continued)

1.4.7 Gate Status Bits #2

01 - Operation Timeout - '1' when Gate Motor times out before Gate reaches Full Open or Full Closed.

02 - Ready to Operate - '1' when Gate is Ready to Operate.

03 - CTEM Fault - '1' when iDRIVE.G Expansion Module fails to communicate with iDRIVE.G Controller.

04 - Encoder Fault - '1' when iDRIVE.G reports an error with the iSENSOR.G Encoder.

05 - Open Learned Handshake - '1' indicates iDRIVE.G has "learned" the FULL Open position.

06 - Close Learned Handshake - '1' indicates iDRIVE.G has "learned" the FULL CLOSE position.

07 - Stop Button - '1' indicates Stop Button present (NC).

08 - Reset Button - '1' indicates Reset Button is pushed.

1.4.8 Gate Command Bits

01 - Gate Slowdown Distance

03 - FSR Close Speed is ON (See Section 4.11)

04 - Hold Closed

05 - Do Not Reset

06 - Learn Open Position

07 - Learn Close Position

08 - Fire Service Hold (FSH)

09 - Fire Service - Phase 2 (FS2)

10 - Fire Service Landing (FSL)

11 - Fire Service Recall (FSR)

12 - Retiring Cam

13 - Buzzer

14 - Slow

15 - Close

16 - Open

1.4.9 Motor Control Bits

03 - Reg Out Test – Factory use. Should be '0' in normal operation.

iLEARN Door Control Menu Screens (continued)

04 - Max volts – '1' indicates that the maximum rate of change algorithm is being utilized instead of the settable ROC parameter. This is in place for emergency acceleration/deceleration needs and is not presently used. Should be '0' in normal operation.

05 - Max ROC – '1' indicates that the maximum rate of change algorithm is being utilized instead of the settable ROC parameter. This is in place for emergency acceleration/deceleration needs and is not presently used. Should be '0' in normal operation.

06 - Direction command. '1' = close, '0' = open.

07 - Run – Run command - '1' indicates motor controller is being commanded to run. '0' means stop.

08 - Control place – Factory use. Should be '0' in normal operation.

1.4.10 Motor Status Bits

06 - '1' = close, '0' = open.

07 - Run '1' indicates inverter is generating an output, and motor should be running.

1.4.11 Motor Fault Bits

03 - '1' = heat sink temperature sensor measured over 100 degrees Celsious. Should be '0' in normal operation.

04 - '1' = motor control parameters are out of range when the motor was commanded to run. Should be '0' in normal operation.

05 - '1' = overcurrent condition (>12.5A) has been detected by the control software. Should be '0' in normal operation.

06 - '1' = DC bus voltage fell below 75V while the motor was commended to run. Should be '0' in normal operation.

07 - '1' = DC bus voltage has exceeded 450V. Should be '0' in normal operation.

08 - '1' = overcurrent (>15A) condition has been detected by the inverter circuit. Should be '0' in normal operation.

1.4.45 Firmware Version - This is the actual version of firmware loaded in the iDrives.

iLEARN Door Control Menu Screens (continued)

1.6 System Monitor - Below are the most often used Menu Items under the System Monitor Section. The remainder of the Menu Items are Described in the iLEARN Menu Supplement.

1.6.1 Unlock Drives - (Yes or No) An iDrive that generates the same three (3) consecutive faults is "locked out". This command will bring all locked out drives back on line.

1.6.2 Reload Parameters - (Yes or No) This diagnostic will return ALL parameters to their factory default values.

1.7 Elevator Control Monitor - Below are the most often used Menu Items under the Elevator Control Monitor Section. The remainder of the Menu Items are Described in the iLEARN Menu Supplement.

01 - CAM - Retiring Cam - The CAM circuit is a NORMALLY OPEN circuit closed when the car is ready to answer a call. Closing this circuit retires the CAM.

02 - INS - Inspection - The INS (or Door/Gate Cut-Out) is a NORMALLY CLOSED circuit opened when door or gate operation is undesirable.

03 - AOF - Auto Open (Front) - The AOF circuit is a NORMALLY OPEN circuit momentarily closed to initiate door and gate opening after the car has leveled at a floor.

04 - AOR - Auto Open (Rear) - The AOR circuit is a NORMALLY OPEN circuit and functions just like the AOF circuit.

05 - HPB - Hall Push Buttons - The HPB circuit is a NORMALLY CLOSED circuit opened to disable corridor door OPEN and CLOSE buttons.

06 - ATC - Auto Time Close - The ATC circuit is a NORMALY CLOSED circuit opened to prevent Automatic Timed Closing of the freight elevator doors.

08 - FSL - Fire Service Landing - The FSL circuit is a NORMALLY OPEN circuit closed when the car is parked at the designated recall landing during Firefighter's Emergency Operation Phase 1 and 2.

09 - FS2 - Fire Service Phase 2 - The FS2 circuit is a NORMALLY OPEN circuit closed only when the Fireman's in-car key switch is set to the ON position.

10 - FSH - Fire Service Phase 2 Hold - The FSH circuit is a NORMALLY CLOSED circuit opened when the Fireman's in-car key switch is set to the HOLD position.

iLEARN Door Control Menu Screens (continued)

1.7.2 Relay Outputs - This diagnostic allows the relay outputs to be tested one at a time. When one of the following is selected, the relay is closed and the output is made.

DCF - Door Closed Front Relay

DCR - Door Closed Rear Relay

DNC - Dor Not Closed Relay

DNO - Door Not Open Relay

ALL - All four Relays

1.7.3 iLEM Function - Use only when the iLEARN Door Control is attached to an iLEARN Expansion Module (iLEM) and the iLEM Function is set to ON (See Section 4.9.11). An iLEM is required only when COURION's iLEARN System is interconnected with certain Elevator Controls.

1.7.3.1 iLEM Version - This is the actual version of firmware loaded in the iLEM.

1.7.3.2 iLEM DINS - Indicates the status of the iLEMs digital inputs:

FO - Front Open RO - Rear Open

FC - Front Closed RC - Rear Closed

Operating Parameters

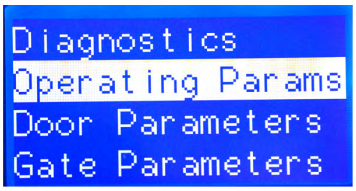

This menu allows operational parameters to be adjusted to suit the needs of individual installations.

IMPORTANT - For changes to these Parameters to take effect, the COURION CANbus Network must by RESTARTED using Restart System under Diagnostics.

2.1 # of Door iDRIVES - This is the number of iDRIVE VFD Floor Controls (door openings) in the system (both Front and Rear).

2.2 # of Car Gates - This is set to '1' for front only or '2' for a front and rear gate system.

2.3 Gate Control Type - Default = DPM. This is an iDRIVE.G Car Top Controller. If you have an iDRIVE.PLC Car Top Controller, change the selection to PLC

2.4 # of Car Stations - Default = 2. This is the number of Car Stations (both front and rear). When # of Car Stations is set to 1, and there are two (2) Car Gates, then the iLEARN System assumes that the Front and Rear Openings are staggered.

iLEARN Door Control Menu Screens (continued)

2.5 Warning Bell Timer - Default = 5.0s. Time the Warning Bell sounds before the gate begins closing. Not in effect while in Fireman's Service.

2.6 Timed Close - Default = 1.0 min. Time before an Automatic Close operation is initiated following an Open operation. The Automatic Timed Close function is enabled by setting the ATC input high.

2.7 Constant Pressure Close - (On or Off) Default = ON. When ON, the close button must be held until the doors and gates are completely closed. When OFF, the close button requires Momentary Pressure.

2.8 Stay Set - (On or Off) Default = ON. When ON, an Automatic Open will be generated when the doors "bounce" by ¾" or more. Both the Open and Close Door iSENSORs must be initialized for Stay Set to operate.

2.9 Operate Together - (On or Off) Default = OFF. When ON, Passenger Sequence Operation is turned off and the doors and gate operate together.

2.10 Fire Service Type - Standard ASME (default) or New York City or Chicago

Door Parameters

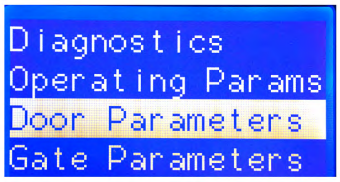

This menu allows hoistway door operational parameters to be adjusted to suit the needs of individual installations.

IMPORTANT - For changes to these Parameters to take effect, the COURION CANbus Network must by RESTARTED using Restart System under Diagnostics.

3.1 Extra Door Time - (On or OFF) Turning this ON changes the Door Timeout from 30s to 50s. This is used when you have a large single section door panel. Call Courion for additional details. This parameter does not affect the Gate Timeout (30s).

3.2 Fast Door Speed - Default = 100%. (100% corresponds to 60Hz). This is the speed the doors run before reaching the "Slowdown Distance" (approximately 8" from FULL OPEN or FULL CLOSE).

3.3 Slow Door Speed - Default = 50%. (50% corresponds to 30Hz). This is the speed the doors run when in the "Slowdown Distance" (approximately 8" from FULL OPEN or FULL CLOSE).

iLEARN Door Control Menu Screens (continued)

3.4 Creep Door Speed - Default = 35%. (35% corresponds to 21Hz). This is the speed the doors run when in the "Creep Distance" (approximately 3" from FULL OPEN or FULL CLOSE).

3.5 Slowdown Distance - Default = 8.0". This is the distance away from FULL OPEN or FULL CLOSE where the door speed will change from "Fast" to "Slow", as set by the iLearn.

3.6 Creep Distance - Default = 3.0". This is the distance away from FULL OPEN or FULL CLOSE where the door speed will change from "Slow" to "Creep", as set by the iLearn.

3.7 Overdrive Time - Default = 1.0s. This is the amount of time the door motors run after the doors reach FULL OPEN or FULL CLOSE.

3.8 CMD Stretch - Default = 0.0 sec. Command Stretch allows for additional Overdrive Time on the Door Motors when a Push Button command is received and the Hoistway Doors are thought to be at their respective travel limits (FULL OPEN or FULL CLOSE). CMD Stretch signal is a "one shot" signal so as to prevent repeated overdrive requests in the event of a stuck push button.

3.9 Motor Parameters - These are parameters to be adjusted ONLY at the factory. They include Motor Minimum Frequency, Motor Minimum Amps, Motor Midpoint Frequency, Motor Midpoint Amps, Motor Maximum Frequency, Motor Maximum Amps, and Ghost Drive. These parameters are protected by a Passcode - Call COURION for additional information.

3.9.9 GHOST DRIVE - Setting Ghost Door to the network address of an iDRIVE will cause that iDRIVE to function as if door motors were connected to it. However, the motor drive circuits will never be powered. It appears to the sequencing logic as if the iDRIVE reported that it reached FULL OPEN or FULL CLOSE in 10ms after being commanded to do so. The Ghost iDRIVE requires the Interlock Zone Contact (ILF or ILR) to be made when the car is at that landing. EUD and STOP must also be made. OPEN and CLOSE are ignored.

3.9.10 ATC Limit Bypass - Provides ability to bypass the 1 minute (1 min) minimum Auto Time Close parameter. Auto Time Close can be set to as low as 0.2 minutes when the Bypass is enabled.

Gate Parameters

This menu allows Car Gate Parameters to be adjusted to suit the needs of individual installations.



IMPORTANT - For changes to these Parameters to take effect, the COURION CANbus Network must by RESTARTED using Restart System under Diagnostics.

iLEARN Door Control Menu Screens (continued)

4.1 Set Up Gate(s) - (Yes or No) This menu item will restart the Car Gate "Learn" wizard to establish the FULL OPEN and FULL CLOSE position of the Car Gate.

4.2 Gate Travel - Default = 96". This is the distance the Car Gate travels from FULL OPEN to FULL CLOSE.

4.3 Fast Speed - Default = 100% (100% corresponds to 60Hz). This is the speed the car gate(s) run before reaching the "Slowdown Distance".

4.4 Slow Speed - Default = 50% (50% corresponds to 30Hz). This is the speed the car gate(s) run when in the "Slowdown Distance"

4.5 Creep Speed - Default = 35%. (35% corresponds to 21Hz). This is the speed the car gate(s) run when in the "Creep Distance".

4.6 Slowdown Distance - Default = 15.0". This is the distance away from FULL OPEN or FULL CLOSE where the Car Gate(s) speed will change from "Fast" to "Slow", as set by the iLEARN.

4.7 Creep Distance - Default = 3.0". This is the distance way from FULL OPEN or FULL CLOSE where the Car Gate(s) speed will change from "Slow" to "Creep", as set by the iLEARN.

4.8 Overdrive Time - Default = 1.0s. This is the amount of time the door motors run after the doors reach FULL OPEN or FULL CLOSE.

4.9 Motor Parameters -These are parameters to be adjusted ONLY at the factory. They include Motor Minimum Frequency, Motor Minimum Amps, Motor Midpoint Frequency, Motor Midpoint Amps, Motor Maximum Frequency, and Motor Maximum Amps. These parameters are protected by a Passcode - Call COURION for additional information.

4.9.9 Light Curtain During Delay -Default is OFF. When turned ON, it allows the Light Curtain to be broken during the Warning Buzzer Delay without interrupting the Close Cycle.

4.9.10 CARE Bypass -Default is OFF. When turned ON, the Light Curtain Reversing Bit from the Gate iDRIVE.g is ignored IF the Car Gate is in the ALMOST FULL CLOSE position.

4.9.11 iLEM Open/Close -Default is OFF. When turned ON, the iLEARN will get the car top OPEN/CLOSE Button function from the iLEM.

4.9.12 Front Light Curtain Bypass -Default is OFF. When turned ON, the Light Curtain reverse bits from the iDRIVE.g are ignored by the iLEARN - Front Gate Light Curtain is effectively TURNED OFF.

iLEARN Door Control Menu Screens (continued)

4.9.13 Rear Light Curtain Bypass -Default is OFF. When turned ON, the Light Curtain reverse bits from the iDRIVE.g are ignored by the iLEARN - Rear Gate Light Curtain is effectively TURNED OFF.

4.11 Fire Service Recall (FSR) Close Speed - Default is OFF. When turned ON, the Car Gate will close at 30% of Full Speed.

Event Counter



Provides the # of cycles (Open/Close) of operation for each iDRIVE.

Event History

This is a presentation of recorded events. Event #0 is the most recent, #1 is the next most recent and so forth. The date and time is also presented.



WHEN TROUBLESHOOTING OR ANSWERING A MAINTENANCE CALL, THIS HISTORY LOG PROVIDES AN EXCELLENT START TO DETERMINING WHAT CAUSED A PROBLEM OR FAULT WITH YOUR COURION FREIGHT DOOR SYSTEM. SEE THE TROUBLESHOOTING AND ERROR MESSAGE SECTION OF THIS MANUAL FOR FURTHER DETAILS.

Upload History



The iLEARN Door Control has the ability to upload the Event History file to your laptop via a USB cable. After attaching the USB Cable to your laptop and the iLEARN Door Control, please take the following steps:

1. Using Windows Device Manager, determine the appropriate USB Com Port that Windows has assigned to the iLEARN USB Port connection. (<START> <CONTROL PANEL> <SYSTEM> <HARDWARE> <DEVICE MANAGER> <Ports (COM & LPT)> USB Serial Port) After determining appropriate COM Port, close all Control Panel windows.

2. Open Windows Hyper Terminal (<START> <ALL PROGRAMS> <ACCESSORIES> <COMMUNICATIONS> <HYPER TERMINAL>). Enter a Connection Description Name and hit OK.

iLEARN Door Control Menu Screens (continued)

3. Select the appropriate COM Port under CONNECT USING on the CONNECT TO Screen and hit OK.

4. Select 38400 under Bits per second, and NONE under Flow Control on the COM Port Properties screen and hit APPLY, and then hit OK.

5. Select <TRANSFER> <Capture Text> on the Menu Line. Enter a location and file name for the Uploaded History File and then hit START.

6. Using the SELECT/MENU Knob on the iLEARN Door Control, turn to UPLOAD HISTORY. Press Ctrl-E on the keyboard and start the download.

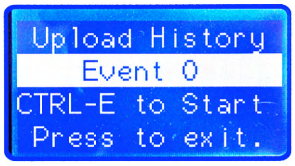

Set Time & Date

Allows the real-time clock to be set. The clock time will be lost if power is removed from the unit for more than 1 week. A battery is not used, therefore there is no internal battery that can be replaced.



Adjust Contrast

Allows the display contrast to be changed. May improve display quality if a “Restore Parameters” command has been executed.

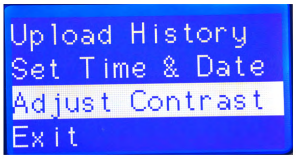

iDRIVE VFD Floor Control

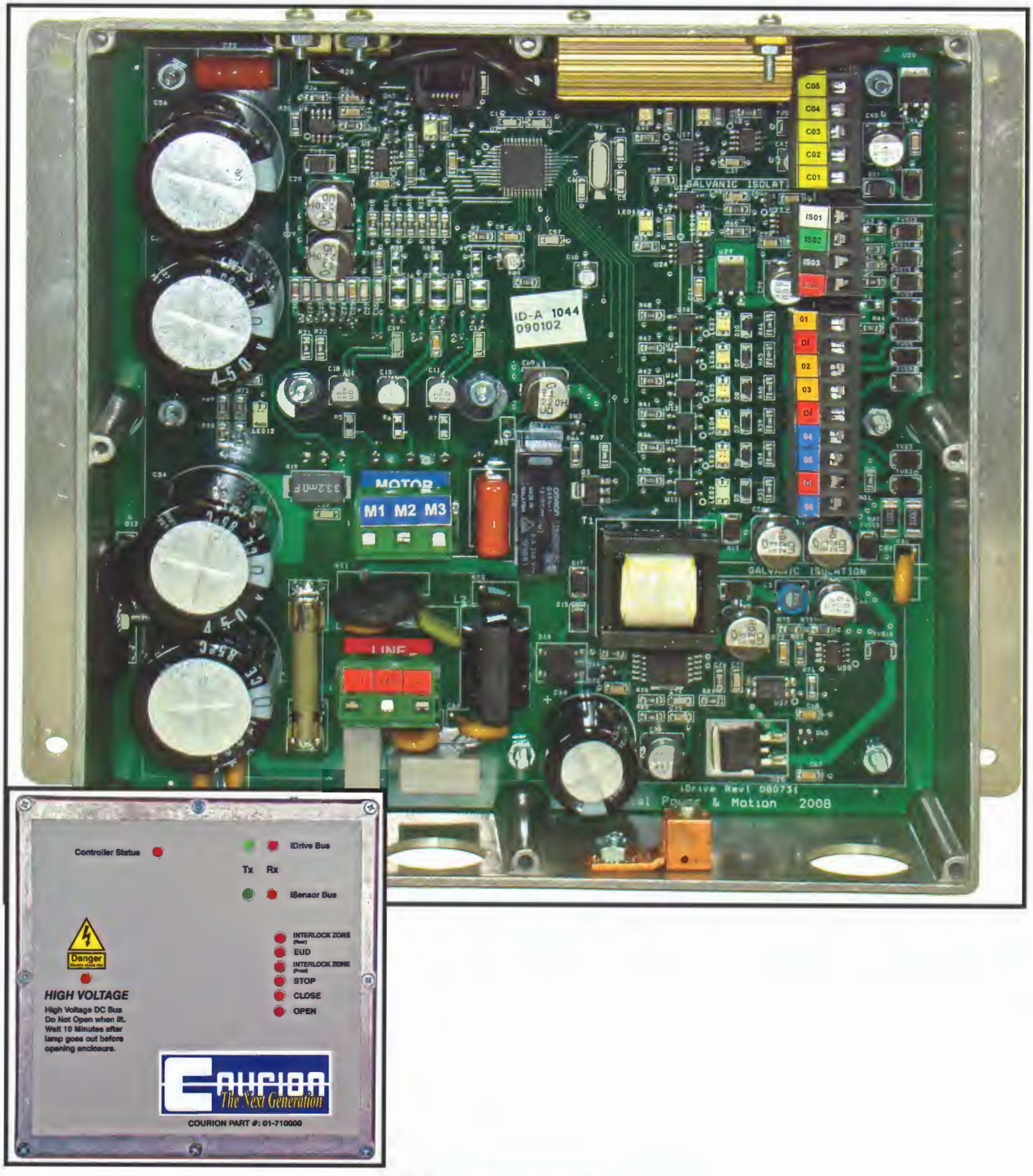

iDRIVE VFD Floor Control Description

CONTROLLER STATUS LED - this LED indicates the STATUS of the iDRIVE VFD Floor Control.

No Flash - iDRIVE has not been addressed on the CANbus network
1 Flash Per Second - Normal operation
2 Flashes Per Second - Door operation fault (time-out)
3 Flashes Per Second - Motor fault (over-current, over-voltage, parameter fault)
4 Flashes Per Second - Memory failure
5 Flashes Per Second - Production test mode

If the STATUS LED is something other than 1 Flash Per Second - ***See the Troubleshooting and Error Message Section of this Manual.***

iDRIVE Network LEDs (RX & TX) - These LEDs indicate the receipt (RX/Red) and transmission (TX/Green) of information over the CANbus network between the iLEARN Door Control and the iDRIVE unit. During normal operation, these LEDs should be rapidly flashing. If both lights are not rapidly flashing, there is a communication error on the CANbus network that needs to be resolved - ***See the Troubleshooting and Error Message Section of this Manual***.

iSENSOR LEDs (RX & TX) - These LEDs indicate the receipt (RX/Red) and transmission (TX/Green) of information between the iSENSORs and the iDRIVE Unit. During normal operation, these LEDs should be rapidly flashing when the iSENSOR magnet on the Lower Door Panel is passing over the Open or Closed iSENSOR. If these lights are not rapidly flashing when the iSENSOR magnet is passing over the appropriate iSENSOR, the iSENSOR is not properly aligned with the iSENSOR magnet - ***See the Troubleshooting and Error Message Section of this Manual***.

Digital Inputs

Open Hall Button - NORMALLY OPEN (not lit) circuit that is closed (lit) when Open Hall Button is pushed.

Close Hall Button - NORMALLY OPEN (not lit) circuit that is closed (lit) when Close Hall Button is pushed.

Stop Hall Button - NORMALLY CLOSED (lit) circuit that is opened (not lit) when Stop Hall Button is pushed. If you do not have a Stop Hall Button, this input must be closed with a jumper.

Interlock Front Zone (or Rear) - NORMALLY OPEN (not lit) circuit that is closed (lit) when the Lift is at that floor and the Front Side (Rear Side) Interlock is retired.

EUD Safety Access - NORMALLY CLOSED (lit) circuit that is opened (not lit) when the EUD is activated. If you do not have an EUD at a particular floor, this input must be closed with a jumper.

iDRIVE.G Car Top Control

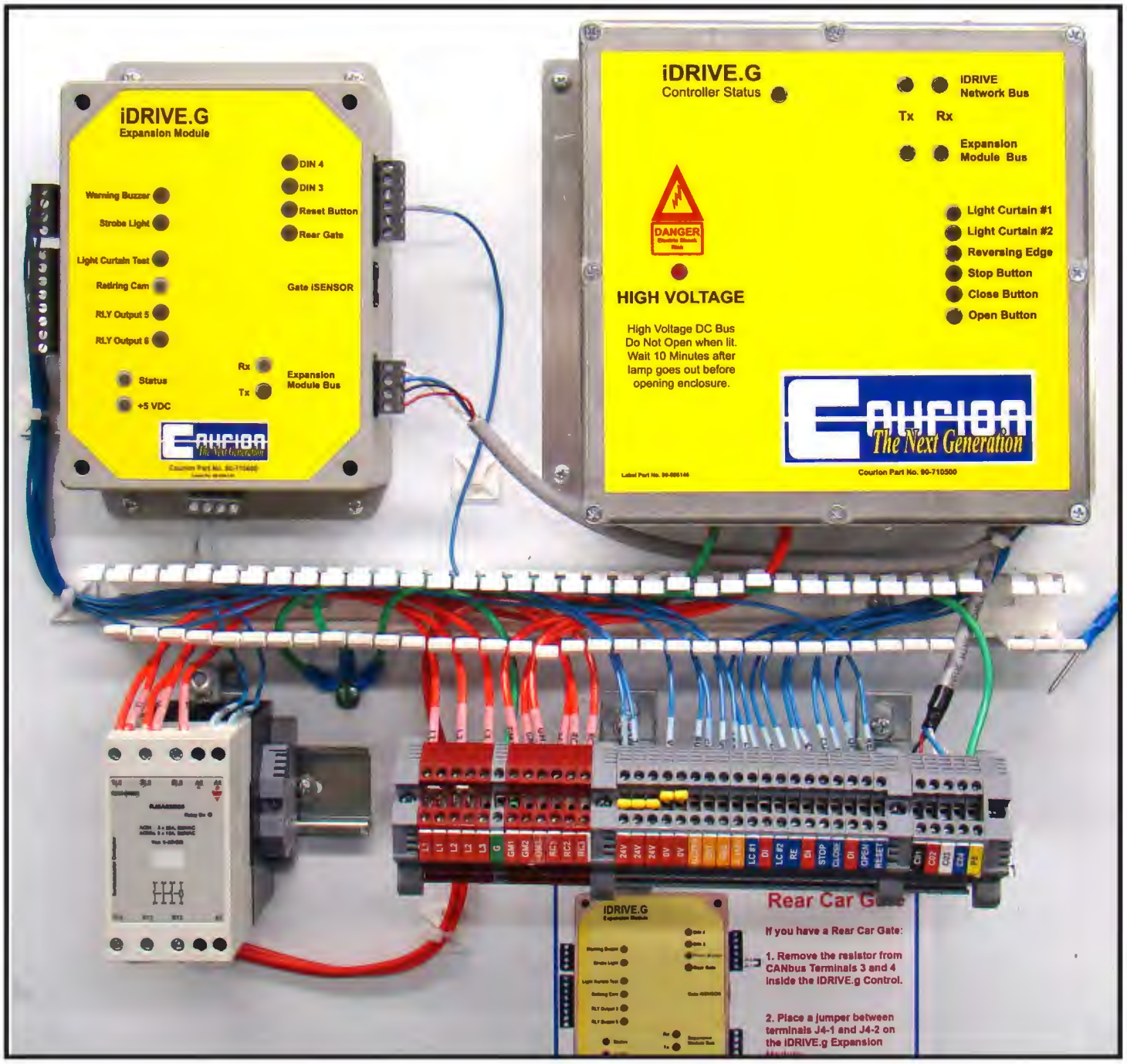

iDRIVE.G Expansion Module (CTEM)

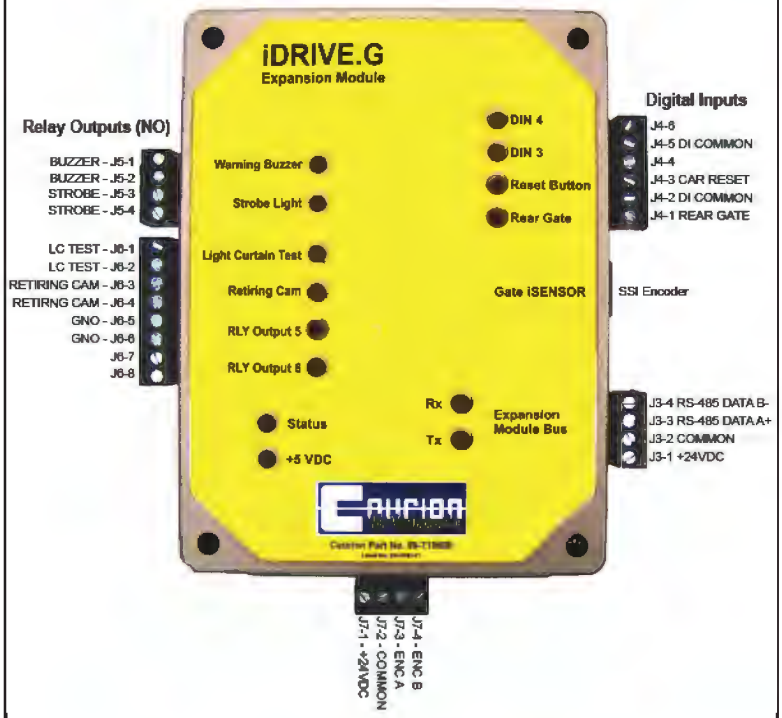

CTEM STATUS Light Codes

1 Flash - Normal Operation
2 Flash - Encoder Communication Error
3 Flash - iDRIVE.G Communication Error

REAR CAR GATE

All iDRIVE.G Car Top Controls are set up for a FRONT Car Gate. If you have a REAR Car Gate, remove the resistor from terminals C03 and C04 inside the iDRIVE.G VFD Controller, and place a jumper between terminals J4-1 and J4-2 entitled “Rear Gate” on the iDRIVE.G Expansion Module.

Relay Output 5 - Gate Not Open
Relay Output 6 - Gate Open

CARE-C Light Curtain Wiring



CARE Light Curtain Power Supply

See CARE Light Curtain Wiring Schematics and Installation Instructions for futher details.

SECOND LIGHT CURTAIN - If you have two (2) Light Curtains per Car Gate Opening, please remove the jumper between digital inputes LC1 and LC2 inside the iDRIVE.G VFD Control.

NOT USED WITH COURION’S 2ND GENERATION CEDES LIGHT CURTAINS WITH SYNC CABLE.

RESET BUTTON

Should an iDRIVE.G become locked due to 3 consecutive same errors, it can be unlocked from the COP by pressing the Reset Button.

iDRIVE.G VFD Controller



CONTROLLER STATUS LED - this LED indicates the Status of the iDRIVE.G VFD Control

0 Flash - No communication with CTEM
1 Flash - Normal Operation
2 Flash - Gate Operation Fault (timeout)
3 Flash - Motor Fault
4 Flash - Memory Failure
5 Flash - Test Mode

If the STATUS LED is something other than 1 Flash per Second - See the Troubleshooting and Error Message Section of this Manual.

iDRIVE.G Network LEDs (RX & TX) - These LEDs indicate the receipt (RX/Red) and transmission (TX/Green) of information over the CANbus network between the iLEARN Door Control and the iDRIVE.G unit. During normal operation, these LEDs should be rapidly flashing. If both lights are not rapidly flashing, there is a communication error on the CANbus network that needs to be resolved - ***See the Troubleshooting and Error Message Section of this Manual***.

EXPANSION MODULE BUS (RX & TX) - These LEDs indicate the receipt (RX/Red) and transmission (TX/Green) of information between the iDRIVE.G Expansion Module and the iDRIVE.G VFD Controller Unit. During normal operation, these LEDs should be rapidly flashing. If both lights are not rapidly flashing, there is a communication error on the CANbus network that needs to be resolved - ***See the Troubleshooting and Error Message Section of this Manual***.

Light Curtain #1 & #2 - NORMALLY CLOSED (lit) circuit that is open (unlit) when the Light Curtain is obstructed by an object.

Reversing Edge - NORMALLY CLOSED (lit) circuit that is open (unlit) when the Reversing Edge is obstructed by an oject.

Stop Button - NORMALY CLOSED (lit) circuit that is open (unlit) when the COP Stop Button is pushed. If you do not have a Stop Button, this circuit must be jumpered.

Close Button - NORMALLY OPEN (unlit) circuit that is closed (lit) when the COP Close Button is pushed.

Open Button - NORMALLY OPEN (unlit) circuit that is closed (lit) when the COP Open Button is pushed.

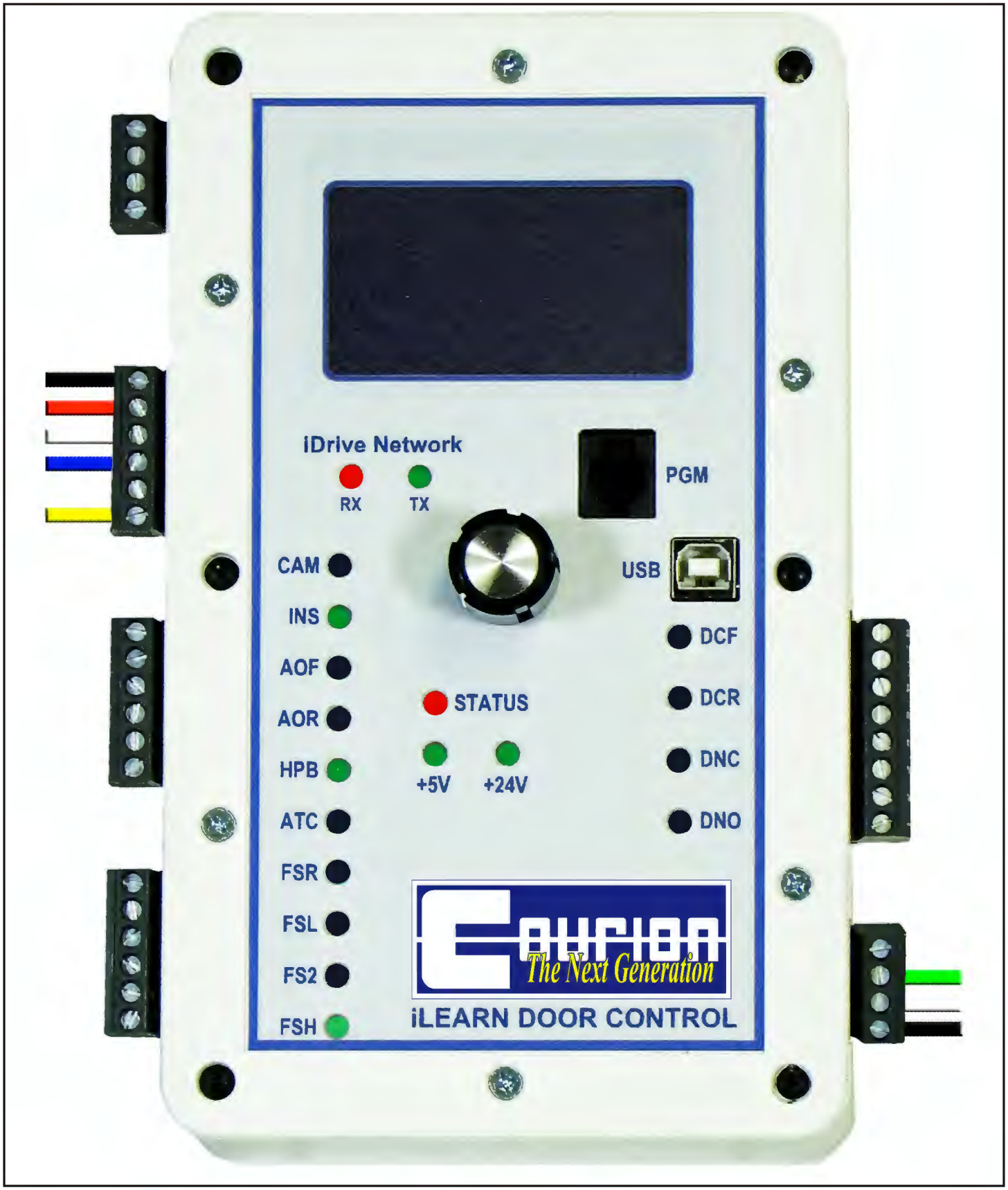
iDrive Network
RX
TX
PGM
USB
CAM
INS
AOF
AOR
HPB
ATC
FSR
FSL
FS2
FSH
STATUS
+5V
+24V
DCF
DCR
DNC
DNO
The Next Generation
iLEARN DOOR CONTROL

iSYSTEM Troubleshooting Guide

Issues at Initial Startup or After a System Restart

THE iDRIVE CANbus NETWORK FAILS TO INITIALIZE, OR DROPS OUT AFTER A SHORT PERIOD OF OPERATION.

WHAT TO LOOK FOR - A failure of COURION's iSYSTEM CANbus Network can be identified in a variety of ways:

- The iLEARN Door Control Boot Screen indicates that the number of iDRIVEs found are LESS than the number of iDRIVEs expected.
- The iDRIVE Network LED Lights (RX & TX) on the iLEARN Door Control are on STEADY. This is a result of the iLEARN transmitting but there are no iDRIVEs (CAN transceivers) acknowledging.
- The iDRIVE Network LED Lights (RX & TX) on the iLEARN Door Control are rapidly flashing, but are dim. This is a result of the iLEARN transmitting and at least one iDRIVE (CAN transceiver) is acknowledging. However, the iLEARN is receiving less acknowledgements that expected.
- The iDRIVE Network LED Lights (RX & TX) on one or more iDRIVE VFD Floor Control are not rapidly flashing.
- Error 01 - NUM OF iDRIVEs appears on the iLEARN Door Control.
- Error 02 - iDRIVE COMMs appears on the iLEARN Door Control.
- Error 16 - GATE ERROR COMMS appears on the iLEARN Door Control.

Step 1: Check the iLEARN Door Control Parameters to insure that you have entered the correct # of iDRIVEs, Car Gates, and Car Stations. See Initial Start-Up and Adjustment Section of this Manual for further information.

Step 2: Check all of your CANbus communication wiring at the iLEARN Door Control and each iDRIVE VFD Floor Control to insure that there are no loose connections or mis-wired communication ports on C01 (24VDC), C02 (COMMON), C03 (CANH), C04 (CANL), C05 (Address In), and C06 (Address Out). Also insure that your twisted-pair shielding is continuous throughout the CANbus Network (from iLEARN Door Control to car top Gate iDRIVE(s)) and properly grounded in the machine room.

Step 3: Disconnect the CANbus connector from the Gate iDRIVE PLC(s) and change the # of GATES Parameter to zero. Reboot the System by recycling the 240VAC and 120VAC power at the disconnect switches. If the iSYSTEM finds the expected number of iDRIVES, then the CANbus Network problem is probably isolated to the car top. If the iSYSTEM does not find the expected number of iDRIVES, then the CANbus Network problem is probably in the hoistway wiring.

Step 4: Remove the 240VAC and 120VAC power to the iDRIVE(s) and iLEARN at the disconnect switch(s). Unplug all CANbus terminal block connectors from all Door and Gate iDRIVE(s). Leaving the 240VAC OFF, turn the 120VAC power back on to the iLEARN Door Control. With a digital voltmeter set to automatic range, take the following readings at BOTH the iLEARN Door Control and the Gate iDRIVE PLC (Front) to insure that you have the correct network voltage:

- Red to C01 (24V) and Black to C02 (COMMON) = +21.6VDC to +26.4VDC
- Red to C03 (CANH) and Black to C02 (COMMON) = +2.6VDC to +2.8VDC
- Red to C04 (CANL) and Black to C02 (COMMON) = +2.0VDC to +2.2VDC
- Red to C05 (Address In) and Black to C02 (COMMON) = 0VDC
- Red to C06 (Address Out) and Black to C02 (COMMON) = +21.6VDC TO +26.4VDC
- Red to C03 (CANH) and Black to C04 (CANL) = this will be a positive (+) value in the tens to hundreds of millivolts range. If this is 0VDC, then there are absolutely no network transceivers sending data. If this is ever measured to be a negative voltage, the CANH and CANL lines are reversed.

If your readings are substantially different than these, you may have an open/shorted connection in your CANbus Network (See Step 5), or the CANH/CANL data lines reversed (See Step 6).

Step 5: Go to the first iDRIVE on your iSYSTEM CANbus Network (and each successive iDRIVE) and take the same readings as described in Step 4 to identify and isolate the open/shorted connection in your iSYSTEM CANbus network. Note that all readings should be in the ranges described in Step 4 with the exception of C05 and C06 which should be as follows:

- Red to C05 (Address In) and Black to C02 (COMMON) = +21.6VDC to +26.4VDC
- Red to C06 (Address Out) and Black to C02 (COMMON) = 0VDC

Before proceeding to the next iDRIVE on your iSYSTEM place a temporary jumper between C05 (Addriss In) and C06 (Address Out). Do not allow the jumper to short to anything metal.

Step 6: With the CANbus terminal block removed from the iLEARN Door Control and the 120VAC power OFF, check the CANbus Network Impedance between C03 (CANH) and C04 (CANL). The resistance reading should range from 114 ohms to 126 ohms. If not, then there is a hoistway wiring issue on C03 and C04.

THE HOISTWAY DOORS DO NOT OPERATE OR ONLY 'CREEP' AT ONE OR MORE OPENINGS

WHAT TO LOOK FOR - Generally, Hoistway Doors fail to operate properly because of a problem with the iSENSORs located in the lower door guides. iSENSOR failures can be identified as follows:

- Hoistway Doors fail to Open or Close
- Hoistway Doors operate only at "creep" speed
- Error 23 - OPEN STALL CHNG appears on the iLEARN Door Control
- Error 24 - CLOSE STALL CHNG appears on the iLEARN Door Control

Step 1: Visually check the iSENSORs to insure they have not been damaged. Replace as required.

Step 2: Check the alignment of the iSENSORs in the Lower Door Guides in relation to the iSENSOR Magnet on the Lower Door Panel.

Using iLEARN Menu Items 1.3.1 to 1.3.3 Open iSENSOR, (of the iLEARN Door Control Menu Screens Section of this Manual) manually open the hoistway doors to insure that the OPEN iSENSOR is reading the iSENSOR magnet and that the position counter is changing in a constant and consistent manner. Adjust the iSENSOR as required.

Using iLEARN Menu Items 1.3.4 to 1.3.6 Close iSENSOR, manually close the hoistway doors to insure that the CLOSE iSENSOR is reading the iSENSOR magnet and that the position counter is changing in a constant and consistent manner. Adjust the iSENSOR as required.

Using iLEARN Menu Item 1.3.8 Door Status Bits, insure the following:

9 (Full Close) = 1 when the hoistway doors are in the FULL CLOSE position
11 (Almost Closed) = 1 when the iSENSOR magnet is over the Close iSENSOR

10 (Full Open) = 1 when the hoistway doors are in the FULL OPEN position
12 (Almost Open) = 1 when the iSENSOR magnet is over the Open iSENSOR

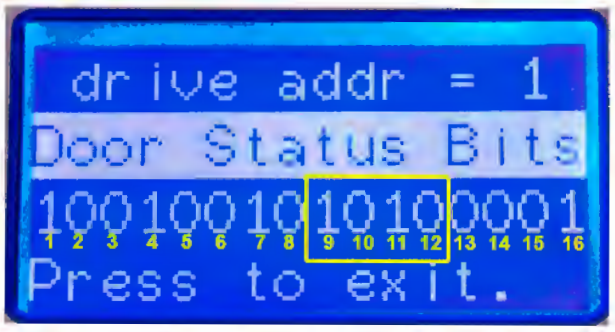

THE HOISTWAY DOORS OPERATE AT "HALF" SPEED IN ONE OR BOTH DIRECTIONS

WHAT TO LOOK FOR - Generally, Hoistway Doors fail to operate properly because of a problem with the iSENSORs located in the lower door guides. iSENSOR failures can be identified as follows:

- Hoistway Doors operate only at "HALF" speed in one or both directions
- Bit 11 (Almost Open) and/or Bit 12 (Almost Closed) under the ILEARN Menu Item 1.3.8 DOOR STATUS BITS, remains at 1 at all times during door operation
- Bit 9 (Full Closed) and/or Bit 10 (Full Open) under the iLEARN Menu Item 1.3.8 DOOR STATUS BITS, remains at 1 at all times during door operation
- Error 23 - OPEN STALL CHNG appears on the iLEARN Door Control
- Error 24 - CLOSE STALL CHNG appears on the iLEARN Door Control

Step 1: Complete Steps 1 & 2 from **THE HOISTWAY DOORS DO NOT OPERATE OR ONLY 'CREEP' AT ONE OR MORE OPENINGS** from above.

Step 2: Adjust the Slowdown Distance (Default = 8") under the iLEARNs Edit Parameters Menu to a distance that eliminates the OPEN STALL CHNG and/or CLOSE STALL CHNG Error Message. You may also have to adjust the Slowdown Door Speed in order to achieve an acceptable FULL OPEN/FULL CLOSE operation.

THE iLEARN PARAMETERS ARE SET FOR SEQUENCE OPERATION BUT THE HOISTWAY DOORS AND CAR GATE CLOSE SIMULTANEOUSLY

Complete Steps 1 & 2 from THE HOISTWAY DOORS DO NOT OPERATE OR ONLY 'CREEP' AT ONE OR MORE OPENINGS from above.

THE HOISTWAY DOORS FAIL TO OPERATE AFTER AN EMERGENCY UNLOCKING DEVICE ("EUD") HAS BEEN PULLED

After an EUD event, the iSYSTEM must be restarted from the iLEARN Door Control, and all Hoistway Doors must relearn their FULL OPEN and FULL CLOSE position.

THE HOISTWAY DOORS STOP OPERATING AFTER 12" TO 18" OF INITIAL TRAVEL

Reverse the Phasing of your M1 and M2 motor wires at each iDRIVE on that side of the hoistway.

THE HOISTWAY DOORS COCK IN THE DOOR GUIDES

Check to insure that your Door Motors are Phased opposite of one another at that Opening and that the Door Panels are level and properly adjusted.

CAN NOT ESTABLISH CANBus COMMUNICATIONS WITH THE CAR GATE iDRIVE CONTROL(S) (Assumes that all Hoistway Door iDRIVE Units are functioning properly on the CANBus Network, and the Hoistway Doors are operating correctly when the "# of Car Gate" Parameter is set to 0)

WHAT TO LOOK FOR - Generally, Car Gate fails to operate or Error 16 - GATE_ERROR_COMMS appears on the iLEARN Door Control.

Step 1: Ensure that the "# of Car Gates" Parameter is set correctly in the iLEARN Door Control Setup.

Step 2: Ensure that the most current Car Gate iDRIVE Software is loaded onto the Car Top Gate iDRIVE Control(s) and that the "FRONT" program is on the Front Gate, and "REAR" program is on the Rear Gate.

Step 3: Ensure that the CANBus Termination Resistor is in the Front Car Gate iDRIVE Control. This resistor is located between C03 and C04 of the Front Car Gate iDRIVE PLC CANBus terminal plug.

Step 4: Ensure that the Car Gate iDRIVE PLC CANBus terminal plugs are properly plugged into the PLC.

Step 5: Ring-out your CANBus Communication wires C01, C02, C03, and C04 from the iLEARN Door Control to the Front Car Gate iDRIVE Control. If you have a hoistway wiring error, please make the necessary corrections and restart your iLEARN Door Control.

Step 6: Power down your iLEARN Door Control and 240V hoistway power supply. Disconnect fuse next to DC Power Supply in Car Gate iDRIVE(s). Turn on your iLEARN Door Control and 240V hoistway power supply. Allow iLEARN to find all hoistway iDRIVE units. Re-insert fuse in Car Gate iDRIVE(s).

CAR GATE WILL NOT OPEN AND/OR CLOSE (Assumes that the iLEARN is communicating with the Car Gate iDRIVE(s) and you have the current and correct Car Gate iDRIVE Software loaded on the Car Gate iDRIVE PLC.)

WHAT TO LOOK FOR - Generally, Car Gate(s) fail to Open and/or Close because the gate motor is phased wrong, or there is an event causing the Gate to stay in the Open position.

Step 1: Your Car Gate Panel should manually run freely in the Gate Guides with no binding or cocking. The Gate Panel should travel an equal distance up or down when manually moved with equal force. Insure that your Gate Weight Stack moves freely.

Step 2: If you do not have a Stop Button in the COP, or it is not hooked up, jumper the Stop Button by placing a temporary wire between DI and 04 Stop in the Car Gate iDRIVE.

Step 3: If you hear the Gate Motor humming when the Open or Close command is given and the Gate(s) will not Open or Close, reverse the phasing of your motor.

Step 4: From the Car Top, check the Digital Inputs Car Gate iDRIVE. Digital Input LEDs Reversing Edge, Light Curtain #1 and #2, and Stop Button should be lit. If any of these are not lit, then check the condition of the specific item.

HOISTWAY DOORS AND CAR GATE(S) WILL NOT CLOSE ON AUTO-TIME-CLOSE

WHAT TO LOOK FOR - Ensure that the ATC input from the Elevator Control is properly wired to the iLEARN Door Control. Check to see that both the OPEN and CLOSE iSENSORs are initialized.

Frequently Asked Questions (FAQ)

Q: I have a momentary pressure close system that, upon pressing and releasing the close button, activates the close buzzer for a couple of seconds and then stops without closing the opening. This only happens a few times out of a hundred – most times it works fine. What conditions can cause this?

A: Once the close latch is activated in the iLEARN, only these things can cause the latch to reset:

- iLEARN resetting
- Reversing edge or Light Curtain reversal
- EITHER hall or car STOP dropping (does NOT depend on HPB)
- ILF/ILR dropping
- FSH dropping
- INS dropping
- Valid open command

It's also possible that EUD dropping or a second ILR/ILF zone activating could cause this latch to reset but that would result in an EUD latch that would require the door to be closed manually before power operation could resume. Keep in mind that any of these conditions only needs to be true for 1/10th second.

Q: I'm monitoring an iDRIVE's Open Position register and see strange operation. It starts out at 97", climbs to 103" as the door opens, and then jumps back to 97" with the door still opening. How is this possible?

A: Your iSENSOR to magnet coupling is poor. When this is the case, this number tends to drift away from a reasonable range of +/- 18". In this particular case, the iSENSOR has a tendency to count more open pulses than close pulses and the number grows over time. Try to improve the magnetic coupling by cleaning metal shavings off the magnet, aligning the iSENSOR, and shimming the iSENSOR out to get closer to the magnet.

Q: I've just downloaded a different version of software to my iLEARN and now I get the Microsoft BSoD (Blue Screen of Death) and no activity on the iLEARN's status LED. How do I fix this?

A: The downloading process has corrupted the bootloader. This is possible when the iDRIVE hex file is inadvertently specified for the iLEARN hex file in nxLoader. The only fix is to return to the factory for reprogramming.

Q: I'm giving a CLOSE or OPEN command but nothing moves. What could be wrong?

A: Any number of things could be wrong. First, make sure your communications network is operating properly. Once done, isolate the problem to the iDrive or the iLearn by checking for the OPEN bit, #7 or the CLOSE bit, #8 in the 1.3.42 Door Cmd Bits register using the iDrive Monitor in the iLearn while an OPEN or CLOSE button is pressed. If the proper bit is set, then the iLEARN is commanding the drive but the drive is not ready. Check these things:

1. Make sure the drives flash code = 1,
2. Check the DINs register in the iDRIVE Monitor and make sure that ILF or ILR is set, EUD is set, and STOP is set.

Q: All of my iDRIVEs are showing Flash Code 3 and won't work even after doing a Restart System.

A: Do a Factory Parameter Restore then do a hard power cycle on both the 120 and the 240. If the problem persists, check for iLEARN/iDRIVE version incompatibilities.

Q: My iLEARN will not find any iDRIVEs. The display reads N iDRIVEs Expected, 0 iDRIVEs found. All of the network voltage and resistance measurements check out, except C04 (CANL) is a little higher than expected and C06 (RAO) is about 12V. What could be wrong?

A: If the first iDRIVE has good LEDs (DC Bus steady, Controller Status flash code = 1, iDRIVE Bus Tx and Rx flashing), it is possible that your iDRIVE has software that is too old to be recognized by the iLEARN. iLEARN versions 1.02 (4/09) and above will not recognize iDRIVE versions 1.01 (3/09) and below. iDRIVEs with serial number 1197 and higher have at least v1.02. To fix this, install v1.01 on the iLEARN, verify communication with all drives, then bring the iLEARN and the iDRIVEs up to the current version.

iLEARN Door Control Error Messages

When an error is present in COURION's Next Generation System, the iLearn Door Control calls out the problematic iDRIVE Unit and the error code in the 3rd line of the iLEARN display. The 4th line of the iLEARN display shows the corresponding error message.

iDrive Unit Number: The hoistway iDRIVE VFD Floor Controls are numbered in the sequence they are attached to the iWIRE CANbus network (N). The Front Gate iDRIVE unit = 127 and the Rear Gate iDRIVE unit (if applicable) = 126.

Error Code #	Error Message
01	**DRIVE_ERROR__NUM_OF_IDRIVES** - Error 01 occurs when the number of hoistway iDRIVEs discovered during a start-up does not match the "NUM OF IDRIVES" parameter entered during Step 1 - Set Up the iLEARN Door Control Parameters of the Initial Startup and Adjustment procedure. ***See "The iDRIVE CANbus Network fails to initialize or drops out after a short period of operation" under Issues at Initial Startup or after System Restart above.***
02	**DRIVE_ERROR__IDRIVE_COMMS -** Error 02 occurs when a discovered iDRIVE stops communicating along the CANbus network with the iLEARN Control. Check the Event History to insure that you do not have an iDRIVE that has be "locked out" by the System. iDRIVE's that generate the same three (3) consecutive faults are "locked out" until the fault is corrected. You may Unlock the iDRIVE from the iLEARN Control - See Section 1.5 of the iLEARN Door Control Menu Screens Section of this Manual. Check the physical condition of the iDRIVE Unit that is not communicating with the iLEARN System. Replace if damaged. ***See "The iDRIVE CANbus Network fails to initialize or drops out after a short period of operation" under Issues at Initial Startup or after System Restart above.***
03	**DRIVE_ERROR__RESET -** Error 03 occurs when an iDRIVE reboots while the iLEARN did not. Check the physical condition of the iDRIVE Unit that rebooted. Replace if damaged. Check the 240v-Single Phase power supply into the iDRIVE Unit to insure there are no loose connections.
04	**DRIVE_ERROR__IDRIVE_EEPROM -** Error 04 occurs when the non-volatile memory in an iDRIVE is corrupted. When the iLEARN boots up, it first searches for each iDRIVE (both hoistway and car top) on the iSYSTEM Network. When this is complete, the ILEARN then begins the process of downloading parameters to each iDRIVE. If during this phase the iLEARN resets, or significant network noise corrupts communication, then the iDRIVEs will view this event as a download failure and report "04 Drive_Error_IDRIVE_EEPROM". In addition, the iLEARN will flash code 4. The hoistway doors will not operate at this point. A system reboot should correct this condition. If you receive Error 4 for a Gate (iDRIVE 126 or 127) there is a chance the iDRIVE.G (Car top controller) is not properly communicating on the iSYSTEM Network. Make sure the CTEM is communicating with the iDRIVE.G VFD Control.

Error Code #	Error Message
05	**DRIVE_ERROR__ISENSOR_COMMS -** Error 05 occurs when one or both iSENSORs connected to the reported iDRIVE has stopped communicating. Check the physical condition of the iSENSORs. Replace if damaged. Check to insure that the iSENSOR Cables are properly wired to the iDRIVE VFD Floor Control. ***See "The Hoistway Doors do not operate or only "creep" at one or more openings" under Issues at Initial Startup or after System Restart above.***
06	**DRIVE_ERROR__DOOR_TIMEOUT -** Error 6 occurs when a specific set of hoistway doors do not reach FULL OPEN or FULL CLOSE (a detectable stall condition as determined by the Door iSENSORs) within an allotted time. Hoistway Door Timeouts occur as follows: If after 10s the iSENSOR magnet is not discovered, the doors go to slow speed. If after another 10s the "creep position" is not found, the doors go to creep speed. If after 30s total, the FULL OPEN or FULL CLOSE position has not been found then a "DOOR TIME OUT" fault is generated. At this point, the iLEARN Control will reset the stall position of the corresponding iSENSOR. The hoistway doors will travel at "creep" speed until the iSENSOR magnet is found and a new FULL OPEN or FULL CLOSE position is identified by the iLEARN System. ***See "The Hoistway Doors do not operate or only "creep" at one or more openings" under Issues at Initial Startup or after System Restart above.***
07	**DRIVE_ERROR__INVERTER -** Error 07 occurs when the inverter module has reported an over current (> 15A) condition.
08	**DRIVE_ERROR__OVERVOLTAGE -** Error 08 occurs when the drive buss voltage exceeded 400V during operation.
09	**DRIVE_ERROR__UNDERVOLTAGE -** Error 09 occurs when the drive buss voltage dropped below 75V during operation.
10	**DRIVE_ERROR__OVERCURRENT -** Error 10 occurs when an iDRIVE detected a >12.5A condition and has stopped the inverter module before it could trip.
11	**DRIVE_ERROR__BAD_PARAMS -** Error 11 occurs when an iDRIVE control parameters fall outside reasonable values. It is not likely that this error will be seen – it was mostly for protection during product development.
12	**DRIVE_ERROR__OVERTEMP -** Error 12 occurs when the inverter/heat sink inside an iDRIVE has exceeded 100 degrees Celsius.
13	**DRIVE_ERROR__LOCKED_OUT -** Error 13 occurs when three (3) consecutive errors of the same code have occurred at the same iDRIVE. These errors are cleared if no additional drive errors occur within thirty-six (36) hours. Please refer to the appropriate Error Code to correct the Error. After correcting the Error that led to the "lock out", you may Unlock the iDRIVE from the iLEARN Control - **See Section 1.5 of the iLEARN Door Control Menu Screens** Section of this Manual.

Error Code #	Error Message
14	**DRIVE_ERROR__IDRIVE_VERSION -** Error 14 occurs when the iDRIVE software version reported does not match that required by the iLearn. The installed version of the iDRIVE program can be found under the Diagnostics - iDRIVE Monitor - Firmware Version Menu (Section 1.3.45 of the iLEARN Door Control Menu Screens Section of this Manual). The required version of the iDRIVE program can be found under the Diagnostics - Firmware Version Menu (Section 1.2 of the iLEARN Door Control Menu Screens Section of this Manual). If you require a different version of iDRIVE software - please contact COURION at (800) 533-5760 or (314) 533-5700.
15	**DRIVE_ERROR__GENERAL_FAULT -** Error 15 occurs when the iDRIVE has reported a General Fault. Error 15 is used as a "catch all" fault for errors that are not called out in more detail by this Manual. Below is a list of events that can trigger Error 15: (a) iDRIVE loses actuating soft motion interlock bits from the iLEARN, or (b) iSENSOR Communication Failure Check the condition of the iSENSOR wiring.
16	**GATE_ERROR__COMMS -** Error 16 occurs when the specified Gate iDRIVE Control has stopped communicating with the iLEARN Door Control. Check the physical condition of the Gate iDRIVE Control PLC that is not communicating with the iLEARN System. Replace if damaged. Restart the Gate iDRIVE Control Unit. ***See "The iDRIVE CANbus Network fails to initialize or drops out after a short period of operation" under Issues at Initial Start-Up or after System Re-start above.***
17	**GATE_ERROR__GENERAL_FAULT -** Error 17 occurs when the Gate iDRIVE PLC has set the General Fault bit.
18	**GATE_ERROR__CURTAIN1_FAULT -** When the Gate iDRIVE.G does not see a Light Curtain output as expected during the light curtain test, the iDRIVE.G reports a light curtain error bit (1.3.50 Gate Status Bits #1 position 04) which is reported as "Light Curtain Error #18. The general causes for this Error are: (1) electrical power interruption during the Light Curtain Test, or (2) the light curtain is blocked during the light curtain test. Courion's iSYSTEM performs the following light curtain test when the Car Gate is given a "CLOSE" command: 1. The Gate iDRIVE.G Expansion Module opens (turns off) the Light Curtain Test Relay, causing the Light Curtain Test LED on the Expansion Module to go off and the NC relay circuit is open. 2. The Gate iDRIVE.G waits up to 0.5s for both the LC #1 and LC #2 inputs on the iDRIVE.G VFD Controller to go low. 3. If 0.5s is exceeded and both inputs are not low, then the cycle is interrupted, the LC error bit is set (causing Error 18 to be reported), and the iDRIVE.G waits for the iLEARN to remove the close command. 4. If both LC inputs are low in the 0.5s period, then the LC Test Relay is again closed (Light Curtain Test LED on the Expansion Module should go on). 5. The iDRIVE.G waits up to 1.5s for both the LC#1 and LC #2 inputs to go high. 6 If 1.5s is exceeded and both inputs are not high, then the cycle is interrupted, the LC error bit is set (causing Error 18 to be reported), and the iDRIVE.G waits for the iLEARN to remove the close command. 7. If both inputs are found high in the 1.5s period, then the Car Gate begins to close.
19	**GATE_ERROR__CURTAIN2_FAULT -** Same as Error 18 except applies to second light curtain (when appliecable).
20	**GATE_ERROR__LOCKED_OUT -** See Error 13 - DRIVE_ERROR__LOCKED_OUT

Error Code #	Error Message
21	**RESTART_SYSTEM -** Restart events are not presented at the iLEARN Display as an Error. Restart Events are only visible in the Event Log.
22	**iLEARN_EVENT_STAY_SET -** Auto Stay-Set activated on hoistway doors.
23	**OPEN_STALL_EVENT_CHNG** (In Ver 2.09 this Error Code is not logged in the Event History) - Error 23 occurs when a new FULL OPEN point is more than 1/2" different from the previous FULL OPEN point at a particular landing. Generally, this is caused when the Open Door iSENSOR or iSENSOR Magnet is misaligned. Check the physical condition of the Open iSENSOR and iSENSOR Magnet. Replace if damaged. Check to insure that the Open iSENSOR Cable is properly wired to the iDRIVE VFD Floor Control. ***See "The Hoistway Doors do not operate or only 'creep' at one or more openings" under Issues at Initial Startup or after System Restart above.***
24	**CLOSE_STALL_EVENT_CHNG** (In Ver 2.09 this Error Code is not logged in the Event History) - Error 24 occurs when a new FULL CLOSE point is more than 1/2" different from the previous FULL CLOSE point at a particular landing. Generally, this is caused when the Closed Door iSENSOR or iSENSOR Magnet is misaligned. Check the physical condition of the Closed iSENSOR and iSENSOR Magnet. Replace if damaged. Check to insure that the Closed iSENSOR Cable is properly wired to the iDRIVE VFD Floor Control. ***See "The Hoistway Doors do not operate or only 'creep' at one or more openings" under Issues at Initial Startup or after System Restart above.***
25	**DRIVE_UNLOCKED** (Added in Ver 1.09) - Error 25 occurs when a Drive is unlocked by using the iLEARN Door Control command UNLOCK DRIVES after Error 13 has occured.
26	**TIMEOUT_ON_OPEN** (Added in Ver 1.09) - Error 26 occurs when specific Hoistway Doors do not reach FULL OPEN (actual physical stall), or the iLEARN does not receive sufficient information from the Open iSENSOR to indicate FULL OPEN within analloted time. Hoistway Door Timeouts occur as follows: If after 10s the iSENSOR magnet is not discovered, the doors go to slow speed. If after another 10s the "creep position" is not found, the doors go to creep speed. If after 30s total, the FULL OPEN position has not been found then a "TIMEOUT_ON_OPEN" fault is generated. At this point, the iLEARN Control will reset the stall position of the corresponding iSENSOR. The hoistway doors will travel at "creep" speed until the iSENSOR magnet is found and a new FULL OPEN position is identified by the iLEARN System. Check the physical condition of the Door Panels and tracks. Make sure there are no physical barriers which prevent the Hoistway Doors from reaching FULL OPEN. Check the physical condition of the OPEN iSENSOR and iSENSOR Magnet. Replace if damaged.

Error Code #	Error Message
27	**TIMEOUT_ON_CLOSE** (Added in Ver 1.09) - Error 27 occurs when specific Hoistway Doors do not reach FULL CLOSE (actual physical stall), or the iLEARN does not receive sufficient information from the Close iSENSOR to indicate FULL CLOSE within an alloted time. Hoistway Door Timeouts occur as follows: If after 10s the iSENSOR magnet is not discovered, the doors go to slow speed. If after another 10s the "creep position" is not found, the doors go to creep speed. If after 30s total, the FULL CLOSE position has not been found then a "TIMEOUT_ON_CLOSE" fault is generated. At this point, the iLEARN Control will reset the stall position of the corresponding iSENSOR. The hoistway doors will travel at "creep" speed until the iSENSOR magnet is found and a new FULL CLOSE position is identified by the iLEARN System. Check the physical condition of the Door Panels and tracks. Make sure there are no physical barriers which prevent the Hoistway Doors from reaching FULL CLOSE. Check the physical condition of the CLOSE iSENSOR and iSENSOR Magnet. Replace if damaged.
28	**GATE_ERROR_EXPANSION_MODULE_FAULT** (Added in Ver. 2.0) - Error 28 indicates that the iDRIVE.G Car Top Controller is not communicating with the Car Top Expansion Module. Check the CANbus cable between the iDRIVE.G VFD Control and the Car Top Expansion Module.
29	**GATE_ERROR_ENCODER_FAULT** (Added in Ver. 2.0) - Error 29 indicates that the current Car Gate's FULL OPEN position is greater than 110% of the "learned" FULL OPEN position. Run the Gate SetUp Wizard to re-establish the Car Gate's "learned" FULL OPEN position.
30	**GATE_ERROR_TIMEOUT** (Added in Ver. 2.0) - Error 30 occurs when a Car Gate does not reach FULL OPEN or FULL CLOSE within an alloted time (30s). Check the physical condition of the Car Gate, Gate Shoes, and Gate Motor. Run the Gate Setup Wizard to re-establish the Car Gate's "learned" FULL OPEN and FULL CLOSE position.
31	**iLEARN_EVENT_REVERSING EVENT** (Added in Ver. 2.0) - A reversing event occured.
32	**iLEARN_EVENT_CURTAIN1_REVERSE** (Added in Ver. 2.0) - A reversing event occured at Light Curtain #1
33	**iLEARN_EVENT_CURTAIN2_REVERSE** (Added in Ver. 2.0) - A reversing event occured at Light Curtain #2
34	**iLEARN_EVENT_SHOE_REVERSE** (Added in Ver. 2.0) - A reversing event occured at Reversing Edge
35	**iLEARN_EVENT_EUD** (Added in Ver. 2.0) - EUD opened
36	**iLEARN_EVENT_RESET_PRESSED** (Added in Ver. 2.0) - iDRIVE.G Car Top Control was locked out of operation and Car Reset Button was pressed to unlock it
37	**GATE_ERROR_MOTOR_FAULT** (Added in Ver. 2.0) - IDRIVE.G Car Top Control reported a motor fault. Inspect Motor Fault Bits to find more specific information.
38	**iLEARN_EVENT_INS_LOW** (Added in Ver. 2.3) - iLEARN lost Inspection Input from Elevator Control

Error Code #	Error Message
39	**iLEARN_EVENT_FSR_LOW** (Added in Ver. 2.3) - iLEARN lost Fire Service Recall Input from Elevator Control
40	**iLEARN_EVENT_FS2_LOW** (Added in Ver. 2.3) - iLEARN lost Fire Service-Phase 2 Input from Elevator Control
41	**iLEARN_EVENT_FSH_LOW** (Added in Ver. 2.3) - iLEARN lost Fire Service Hold Input from Elevator Control
42	**iLEARN_EVENT_HALL_STOP** (Added in Ver. 2.3) - HALL STOP went low for 3 seconds while Hall Push Buttons was high.
43	**iLEM_COMMS_LOST** (Added in Ver 2.06) - If the iLEM Open/Close is set to ON, Error 43 indicates that communication from the iLEARN to the iLEM has be lost.
44	**ILEARN_COMMS** (Added in Ver. 2.09) Error 44 occurs when the iDRIVE does not “hear” from the iLEARN in 3s. Check the physical condition of the CANbus wiring.
45	**INTERLOCK_ZONE** (Added in Ver. 2.09) Error 45 occurs when the iDRIVE loses input from the Interlock Zone Contact (front or rear) Check the physical condition of the Retiring Cam and Interlock - make sure the Interlock Arm is actuated sufficiently to close the Interlock Zone Contact at the floor you have experienced this error.
46	**EUD_ERROR** (Added in Ver. 2.09) Error 46 occurs when the iDRIVE loses input from the EUD (or permanent jumper at floors with no EUD) Check the physical condition of the EUDs

iLEARN Door Control Menu - Supplement

Diagnostics - 1.3 Door Monitor and 1.4 Gate Monitor

1.3.16/1.4.12 Motor PWM Frequency - This is the motor PWM frequency in Hz. It is presently set to 12kHz.

1.3.17/1.4.13 Motor Min Frequency - This is the minimum allowable motor frequency usable by the internal controller and is presently set to 0 Hz (or 0%).

1.3.18/1.4.14 Motor Min Amp - This is the minimum allowable motor voltage usable by the internal controller and is presently set to 100% to support operation with torque motors.

1.3.19/1.4.15 Motor Midpoint Frequency - This is the midpoint motor frequency used by the internal controller and is presently set to 30 Hz (or 50%).

1.3.20/1.4.16 Motor Midpoint Amp - This is the midpoint motor voltage used by the internal controller and is presently set to 100% to support operation with torque motors.

1.3.21/1.4.17 Motor Max Frequency - This is the maximum allowable motor frequency usable by the internal controller and is presently set to 60Hz (or 100%).

1.3.22/1.4.18 Motor Max Amp - This is the maximum allowable motor voltage usable by the internal controller and is presently set to 100% to support operation with torque motors.

1.3.23/1.4.19 Motor Frequency ROC - This is the frequency rate of change. It controls how rapidly the motor's frequency command changes. 100% represents a rate of change of 60Hz per second. It is presently set to 100%.

1.3.24/1.4.20 Motor Frequency Cmd - This is the frequency at which the motor controller is presently being requested to run.

1.3.25/1.4.21 Motor Frequency - This is the actual frequency at which the motor inverter is being commanded to run. It is normally the same as "Mtr Freq Cmd" but may be different during acceleration or deceleration.

1.3.26/1.4.22 Motor Current - Instantaneous vector sum of three motor phase currents. Value will not be steady and is only used for peak value over-current detection and protection.

1.3.27/1.4.23 Bus Voltage - This is the instantaneous DC bus voltage. It will be approximately 1.4 times the AC voltage input (~290V for 208VAC in, ~320 for 230VAC in).

1.3.28/1.4.24 Peak Bus Voltage - This is the peak value to date of the instantaneous bus voltage.

iLEARN Door Control Menu Screens (continued)

1.3.29/1.4.25 Controller State - Reserved for future use.

1.3.30/1.4.26 Temperature - This is the approximate temperature of the inverter module to the nearest 5 degrees Celsius.

1.3.31/1.4.27 Brake Temperature - Reserved for future use.

1.3.32/1.4.28 POR Minutes - Number of minutes since unit was powered on. Resets to zero every 45 days.

1.3.33/1.4.29 Pass code - Reserved for future use.

1.3.34/1.4.30 EEPROM Status - Reserved for future use.

1.3.35/1.4.31 Brake Cycles - Number of times dynamic brake has been turned on.

1.3.36/1.4.32 Brake Time On - Amount of time dynamic brake was on during the last brake cycle.

1.3.37/1.4.33 Peak Motor Current - Peak value of register “Motor Current”.

1.3.38/1.4.34 Slowdown Distance - This is the distance away from the stall position where the door speed will change from “Fast” to “Slow”, as set by the iLearn Door Control.

1.3.39/1.4.35 Creep Distance - This is the distance away from the stall position where the door speed will change from “Slow” to “Creep”, as set by the iLearn Door Control.

1.3.40/1.4.36 Fast Speed - This is the speed the door runs when it is at full speed and not in the “Slowdown Distance”, as set by the iLEARN Door Control.

1.3.41/1.4.37 Slow Speed - This is the speed the door runs when it is greater than “Creep Distance” away from the stall position but less than “Slowdown Distance” away, as set by the iLearn Door Control.

1.3.42/1.4.38 Creep Speed - This is the speed the door runs when it is less than “Creep Distance” away from the stall position, as set by the iLearn.

1.3.43/1.4.39 Overdrive Time - This is the amount of time the door motors run after your hoistway doors reach FULL OPEN or FULL CLOSE.

iLEARN Door Control Menu Screens (continued)

1.3.44/1.4.40 Brake Override - Factory use only.

Diagnostics - 1.5 PLC Gate Monitor

Used ONLY if you have a Gate iDRIVE.PLC Car Top Control - The PLC Gate Monitor is used to inspect communications with the iDRIVE.PLC Car Top Control. iDRIVE.PLC Car Top Controls are identified as FRONT and REAR.

1.5.1 Front Gate Status

01 Gen Fault – '1' when Gate PLC is reporting a General Fault status, '0' otherwise.

02 Stall – '1' when Gate PLC is reporting reversing due to stall, '0' otherwise.

03 Curtain 2 – '1' when Gate PLC is reporting reversing due to curtain #2 interruption, '0' otherwise.

04 Curtain 1 – '1' when Gate PLC is reporting reversing due to curtain #1 interruption, '0' otherwise.

05 Shoe – '1' when Gate PLC is reporting reversing due to shoe, '0' otherwise.

06 Reversing – '1' when Gate PLC is reporting that a reversing event has been detected, '0' otherwise.

07 Closing - '1' when Gate PLC is reporting closing status, '0' otherwise.

08 Opening - '1' when Gate PLC is reporting opening status, '0' otherwise.

09 Almost Close - '1' when Gate PLC is reporting almost "FULL CLOSE".

10 Almost Open – '1' when Gate PLC is reporting almost "FULL OPEN" status.

11 Full Close – '1' when Gate PLC is reporting "FULL CLOSE" status.

12 Full Open – '1' when Gate PLC is reporting "FULL OPEN" status.

19 Stop – '0' when Gate PLC is reporting Stop button press, '1' otherwise.

20 Reset – '1' when Gate PLC is reporting Reset button press, '0' otherwise.

21 Close – '1' when Gate PLC is reporting Close button press, '0' otherwise.

22 Open – '1' when Gate PLC is reporting Open button press status, '0' otherwise.

23 C2 Fault – '1' when Gate PLC is reporting a Light Curtain #2 fault, '0' otherwise.

24 C1 Fault – '1' when Gate PLC is reporting a Light Curtain #1 fault, '0' otherwise.

iLEARN Door Control Menu Screens (continued)

1.5.2 Front Gate Comms - This is the number of good command/reply transactions between the iLearn and this Gate PLC in the last second. Approximately 240 transactions per second are shared by all slaves on the network. For example, if there are 6 door openings and 2 car gates, this number would be around 30 for a noise free network.

1.5.3 Rear Gate Status - Same as "Front Gate Status" above.

1.5.4 Rear/Good Comms - See "Front/Rear Good Comms".

Diagnostics - 1.6 System Monitor

1.6.3 CAN Loop Back - For factory testing only.

1.6.4 USB Echo - For factory testing only.

Diagnostics - 1.8 I/O Monitor - Used for Factory Testing

Door & Gate Parameters - 3.8 Motor Parameters and 4.0 Gate Parameters

These are parameters to be adjusted ONLY at the factory. They include Motor Minimum Frequency, Motor Minimum Amps, Motor Midpoint Frequency, Motor Midpoint Amps, Motor Maximum Frequency, and Motor Maximum Amps. These parameters are protected by a Passcode - Call COURION for additional information.

4.10 PLC Slowdown Code - Default = 4. This is the distance away from FULL OPEN and FULL CLOSE where the car gate speed will change from "Fast" to "Slow", as set by the Gate iDRIVE.G. 4 = approximately 12"; each increment of 1 = approximately 2".

iLEARN-iLEM ADDENDUM - (KONE Elevator Control)

When using Courion's new iLEARN Door Control System with certain KONE elevator controllers, Courion must provide an additional iLEM Expansion Module.

In order for the iLEARN Door Control and iLEM Expansion Module to perform as designed, the iLEARN Door Control must be running Version 2.06 (or above) software. Normally, this version of the software has been loaded onto the control at the factory.

To enable the iLEM Expansion Module, go to the Gate Parameters menu, then Motor Params, then Passcode. Enter 1856 as the passcode and press the round scoll knob to enter. Next, select iLEM OPEN/CLOSE under the same menu item, and change to "ON", then exit. Exit all menues.

The iLEARN Door Control will now accept and communicate with the iLEM Expansion Module.

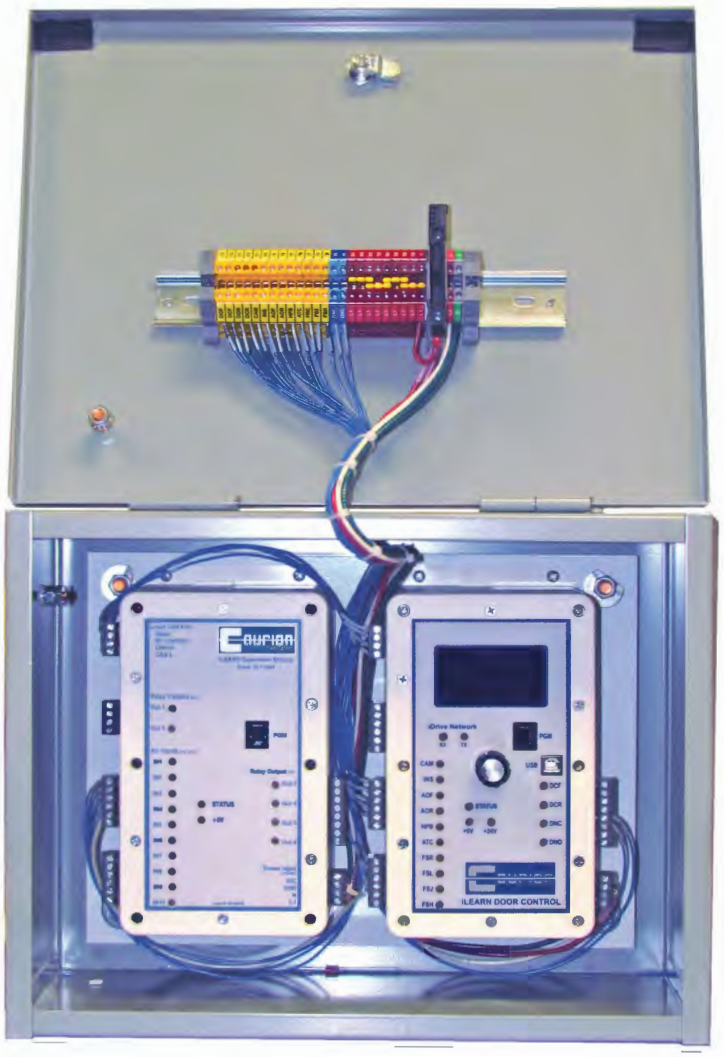

iLEARN-iLEM ADDENDUM

(OTIS Elevator 211/411 Control Interface)

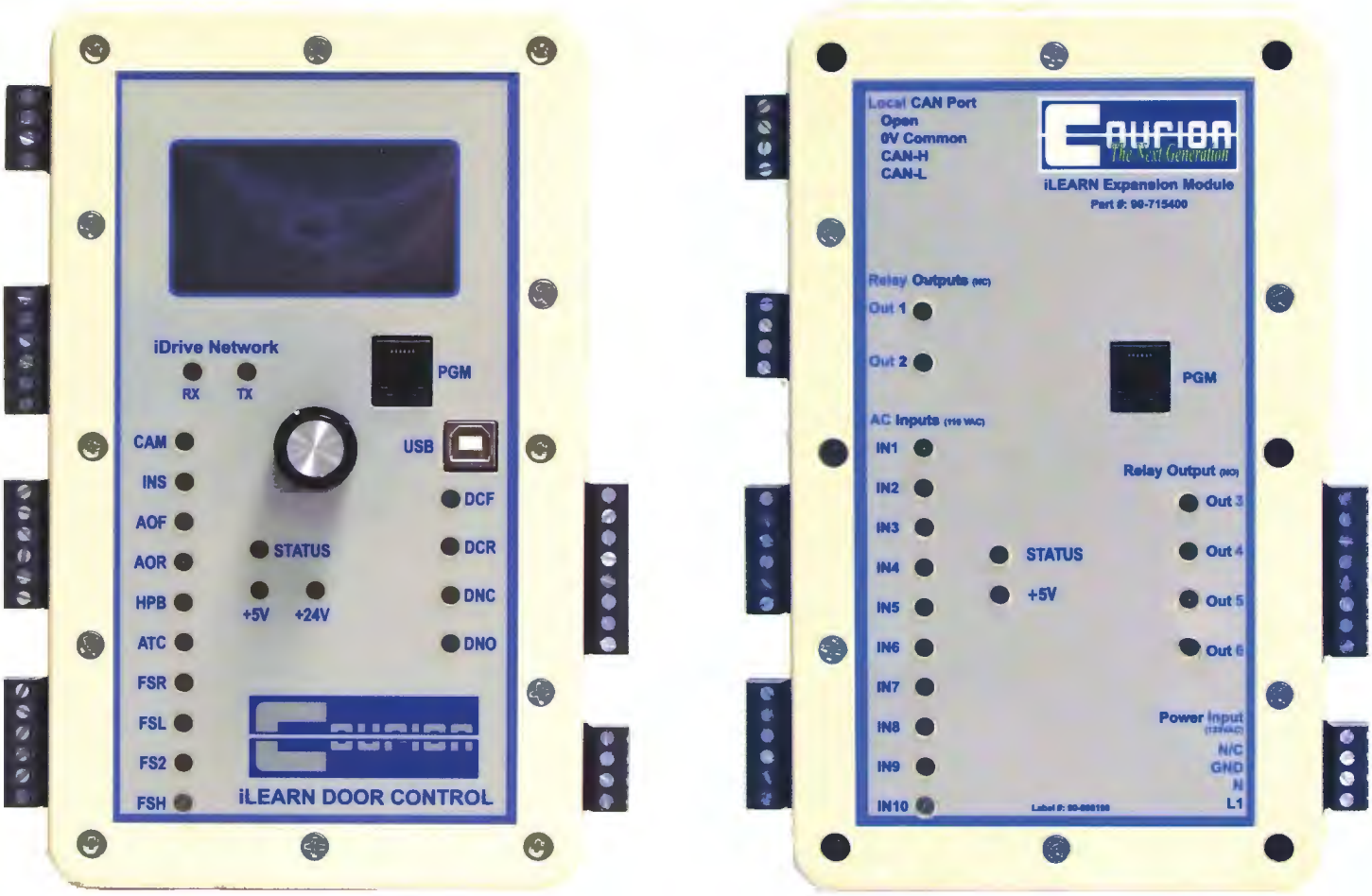

The Otis 211/411 interface is not typical for freight elevator controls. Door operation pushbuttons are wired directly to the Otis Control as shown on the Otis wiring schematics. The Otis Control processes these inputs and passes commands over to the Courion iLEARN Door Control. These commands are acted on as if they were “constant pressure” commands (e.g. if the DO (Door Open) command is given, the hoistway doors and car gate will open in sequence. If at any point the DO command is removed, the hoistway doors and car gate will stop at that position). The Courion iLEARN Control passes back hoistway door and car gate position information to the Otis Control.

OTIS CONTROL INTERFACE

The standard Otis interface to Courion PLC controls is used without modification with the Courion iLEARN Control. The Otis Interface Wiring connects to terminals beginning with the designation OTB.

Wiring shown on the Otis Wiring Schematic with connections to terminals beginning with the designation CTB (Courion Terminal Block), and Courion motor wiring shown on the Otis Wiring Schematics to terminals beginning with designations DM, GM, or RC should be ignored. This wiring does not con-

nect to the Otis Control and may depict a portion of an older door control with switches and wiring no longer required.

Follow the Wiring Schematics provided by Courion to wire the Courion equipment in the hoistway and on the car top. Proper Courion Wiring Schematics will have a Revision number beginning with the designation OTIS in the title block.

WIRE PROVIDED BY COURION

The Courion equipment requires only a 4-wire CANbus cable, a one (1) wire addressing line, and three (3) 230VAC power wires coming from the machine room. The Courion wiring bundle and Traveling Cable include thirteen (13) additional wires labeled DCxx, DCAxx, DLxx, DLAxx, GCxx, and SCxx, which can be used for wiring the Door Closed, Door Locked, Gate Contact, and Safety Contact (Emergency Exit) if desired. The wiring of these contacts must be as instructed on the Otis Elevator Control Schematics. These wires do not connect to the Courion Door Control System, and are not necessary for door operation.

SOFTWARE VERSION

The Courion iLEARN Control software must be at least version 3.03.

INITIAL SETUP

Run the COURION iLEARN Setup Wizard, including Gate Setup, **BEFORE** making your Otis Control/iLEARN Control Interconnections. If the interconnections are already in place, disconnect the ODC (OTB 3) and CDC (OTB 4) wires from the Courion iLEARN Terminal Block in the Courion Control box.

The Open and Close commands may be simulated by momentarily jumping OTB 1 to OTB 3 for DO, and OTB 1 to OTB 4 for DC on the Courion Control Terminal Block during the Gate Setup portion of the Setup Wizard. The DED input (OTB 5) does not need to be high to set up the Courion doors.

COURION HOISTWAY AND CAR TOP NOTES

STOP BUTTON - Because all standard push buttons are wired to the Otis Elevator Control, the STOP input on each door and gate iDRIVE needs to be jumped high.

EMERGENCY UNLOCKING DEVICE (EUD) - At every floor there is an EUD input on the iDRIVE. This is for the Emergency Unlocking Device (Pull Chain Box). If an EUD is present, there will be a switch located either in the Interlock (P Style) or in the EUD itself (Q Style). This switch should be wired to the EUD input and should drop if the device is used to unlock the hoistway doors. If there is no EUD at a floor, the EUD input must be jumped.

GATE REVERSING EDGE AND LIGHT CURTAINS - Car Gate Reversing Edges and Light Curtains wire to the Courion Car Top Control. Remember to remove the jumper in the Light Curtain Power

Supply box, and make sure the polarity of the Light Curtain Test input is correct (LCT to +, 0V to -).

BUZZER - The Buzzer requires proper polarity. Wire the BUZZ terminal to the red buzzer lead (+) and 0V to the black buzzer lead (-).

iLEARN EXPANSION MODULE DIGITAL INPUTS

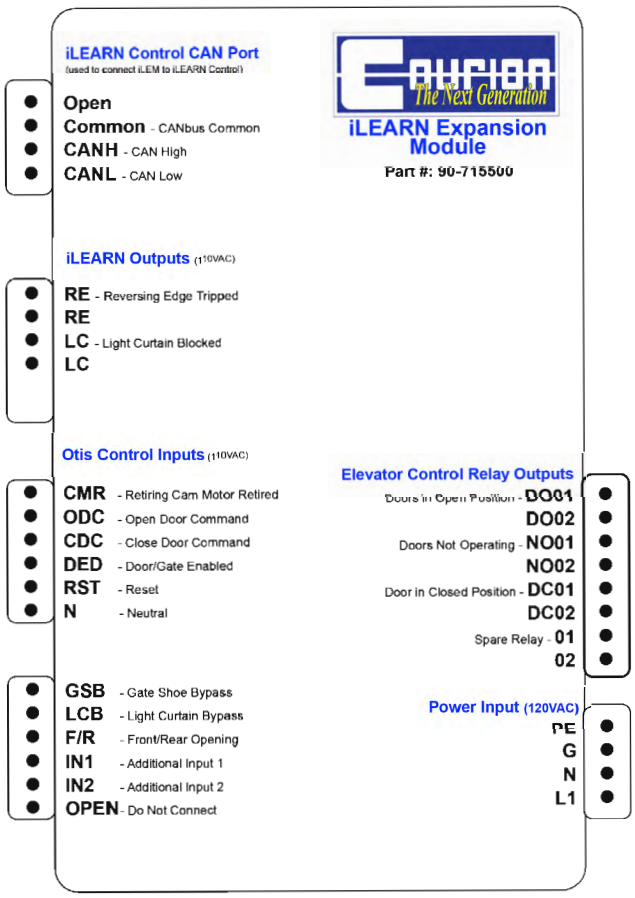

CMR – Retiring Cam [OTB 1/2] - The CMR circuit is a **NORMALLY OPEN** (LED OFF) circuit. Otis CMR Contact will close (LED ON) to energize the Retiring CAM.

ODC – Open Door Command [OTB 1/3] – The ODC circuit is a **NORMALLY OPEN** (LED OFF) circuit. Otis DO Contact will close (LED ON) when hoistway doors and car gate are commanded to open. Otis DO Contact will open when hoistway doors and car gate are fully open as indicated by an OPEN DO relay (LED OFF) (See DO01/DO02 below).

CDC – Close Door Command [OTB 1/4] – The CDC circuit is a **NORMALLY OPEN** (LED OFF) circuit. Otis DC Contact will close (LED ON) when hoistway doors and car gate are commanded to close. Otis DC Contact will open when hoistway doors and car gate are fully closed as indicated by an OPEN DC relay (LED OFF) (See DC01/DC02 below). If a reversal device (Reversing Edge Safety Shoe or Light Curtain) operates, the Courion Control will stop door closing without waiting for the DC Contact to open.

DED – Door/Gate Enabled [OTB 6/7] – The DED circuit is a **NORMALLY CLOSED** (LED ON) circuit. This circuit opens (LED OFF) when the Lift is operated on INSPECTION, the pit switch is actuated, or the car emergency stop button is actuated.

RST – Reset [OTB 8/9] – The RST circuit is a **NORMALLY OPEN** (LED OFF) circuit. Otis RST Contact closes momentarily (LED ON) to reset Door Control (adjustable period). When Reset signal is given the doors shall not move until Otis DO or DC contact operates.

GSB – Gate Shoe Bypass [OTB 1/17] – The GSB circuit is a **NORMALLY OPEN** (LED OFF) circuit. This circuit closes (LED ON) when the Gate Reversing Edge is rendered inoperative during fire service.

LCB – Light Curtain Bypass [OTB 1/18] – The LCB circuit is **NORMALLY OPEN** (LED OFF) circuit.

This circuit closes (LED ON) when the Light Curtain is rendered inoperative during fire service.

F/R – Front or Rear Opening – The F/R circuit is a **NORMALLY OPEN** (LED OFF) circuit for a FRONT Opening and NORMALLY CLOSED (LED ON) circuit for a Rear Opening. This Input is wired by COURION at the factory.

iLEARN EXPANSION MODULE RELAY OUTPUTS

DO – Doors In Open Position [OTB 10/11] – The DO circuit is a **NORMALLY OPEN** (LED OFF) relay that closes (LED ON) when the Hoistway Doors and Car Gate are not in an OPEN position. During Start Up or a Restart of the System, and the Door position is not known, the DO Relay will close (LED ON) when the Car Gate is not in an OPEN position.

NO – Doors Not Operating [OTB 12/13] – The NO circuit is a **NORMALLY OPEN** (LED OFF) relay that closes (LED ON) when the iLEARN Door Control is non-operational.

DC – Doors in Closed Position [DC 1/2] – The DC circuit is a **NORMALLY OPEN** (LED OFF) relay that closes (LED ON) when the Hoistway Doors and Car Gate are in any OPEN position or the power closing cycle is not complete.

RE – Reversing Edge Tripped [OTB 14/15] – The Reversing Edge Tripped circuit is a **NORMALLY CLOSED** relay that Courion energizes to OPEN (LED ON). The RE Relay closes (LED OFF) when the Gate Reversing Edge is tripped.

LC – Light Curtain Tripped [OTB 14/16] – The Light Curtain Tripped circuit is a **NORMALLY CLOSED** relay that the Courion Control energizes to OPEN (LED ON). The LC Relay closes (LED OFF) when the Light Curtain is tripped.

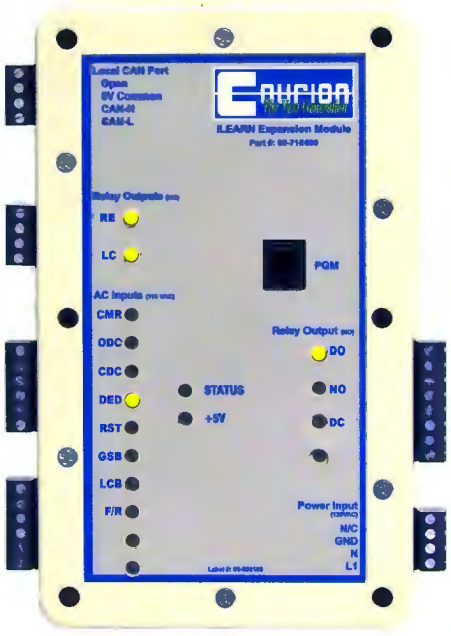

Doors at rest in Closed Position

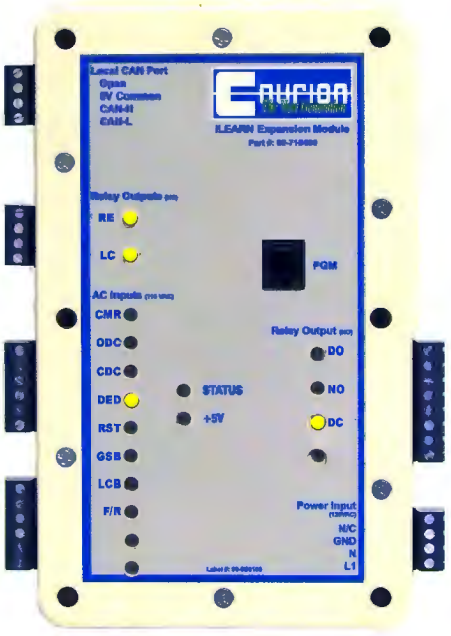

Doors at rest in Open Position

Doors Closing

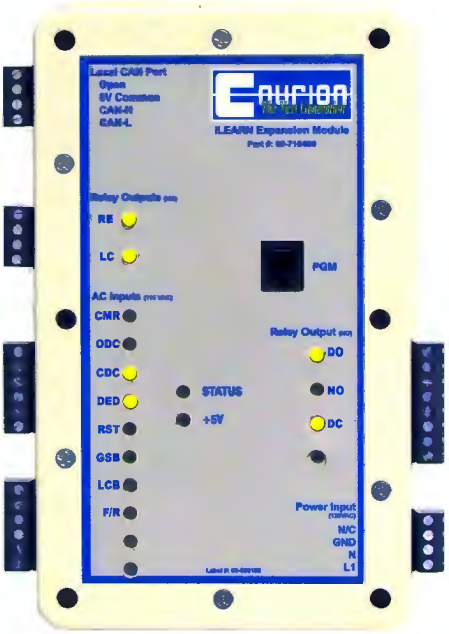

Doors Opening

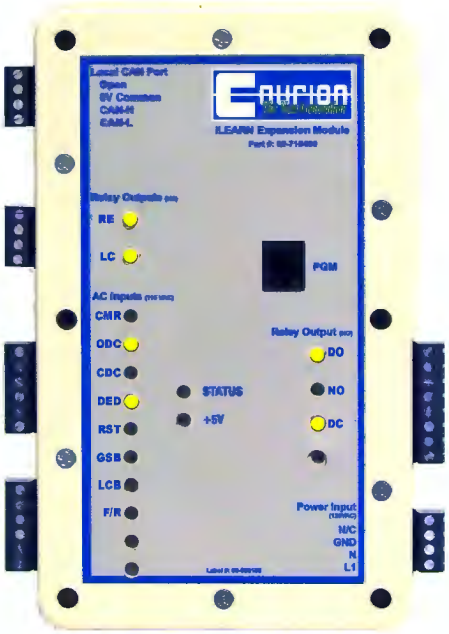

3044 Lambdin Avenue
St. Louis, Missouri 63115
(800) 533-5760 or (314) 533-5700
(314) 533-5720 (fax)
e-mail: sales@couriondoors.com
www.couriondoors.com

The Next Generation

Installation--Light-Curtain-CURION

COURION
The Next Generation

THE NEXT GENERATION OF FREIGHT ELEVATOR DOORS



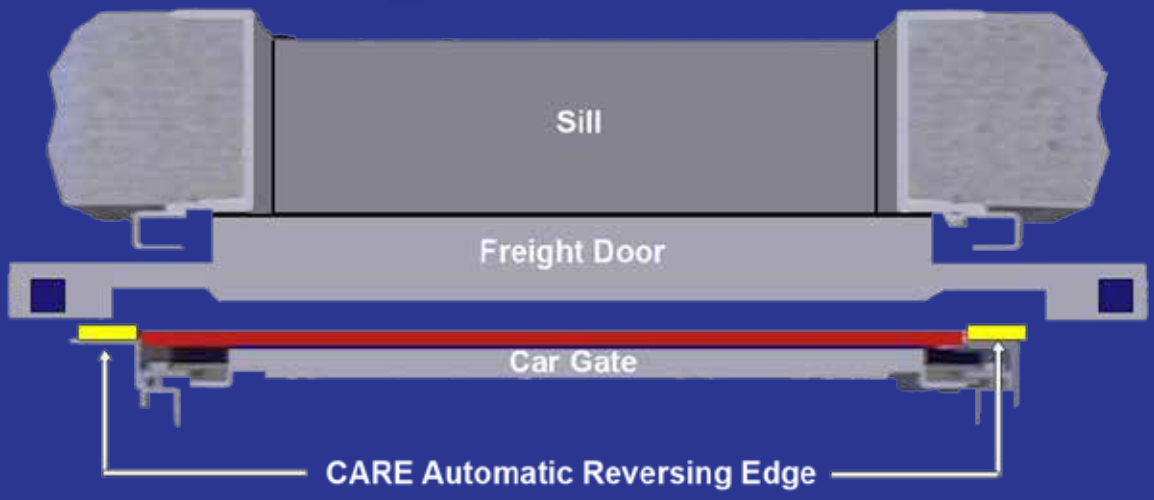

CARE-C Light Curtain
Installation Instructions

www.couriondoors.com

❶ *Install Mounting Brackets*

If your Gate Guides do **NOT** have CARE C Mounting Brackets, please install utilizing one of these two options: (1) Tack weld the CARE Mounting Bracket to the Gate Guides, or (2) Drill 17/64” holes thru the Gate Guides and attach with the mounting hardware provided by Courion.



Distance From Car Floor
1” (25mm)
(Q Guides Shown)

Distance From Face of Gate Guide as Shown on Following Plan Views	
Single Section Q-Style (shown)	1-1/8” (29mm)
2-Section Q-Style	1-5/8” (41mm)
Single Section Angle Guide	2-1/4” (57mm)
2-Section Angle Guide	1-5/16” (31mm)

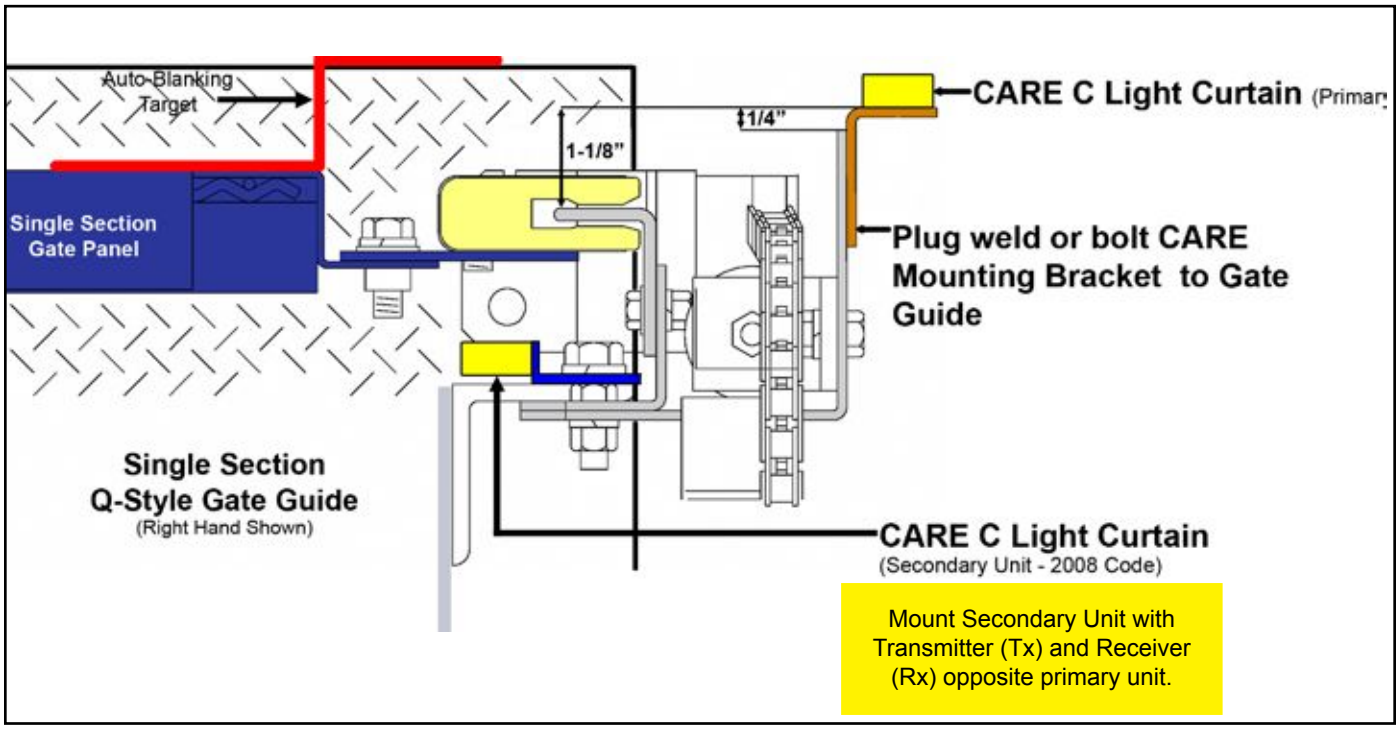

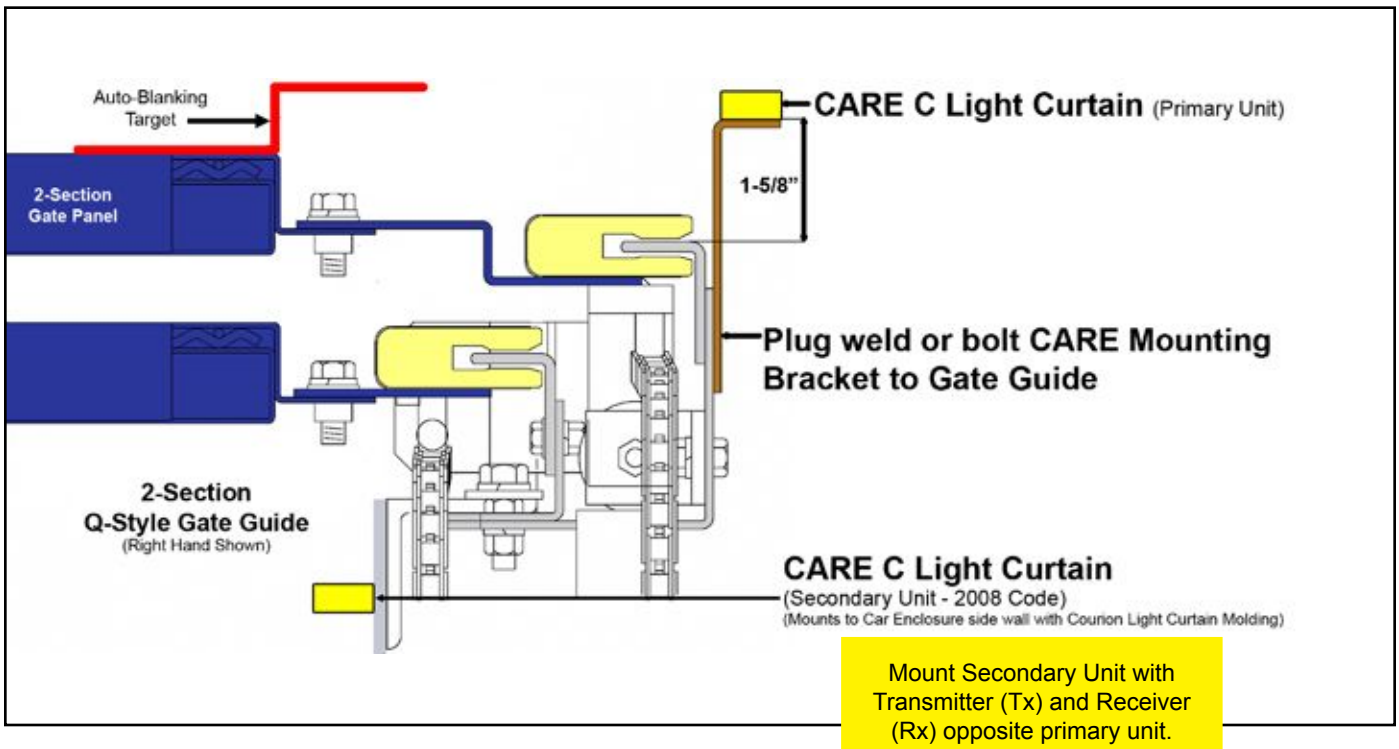

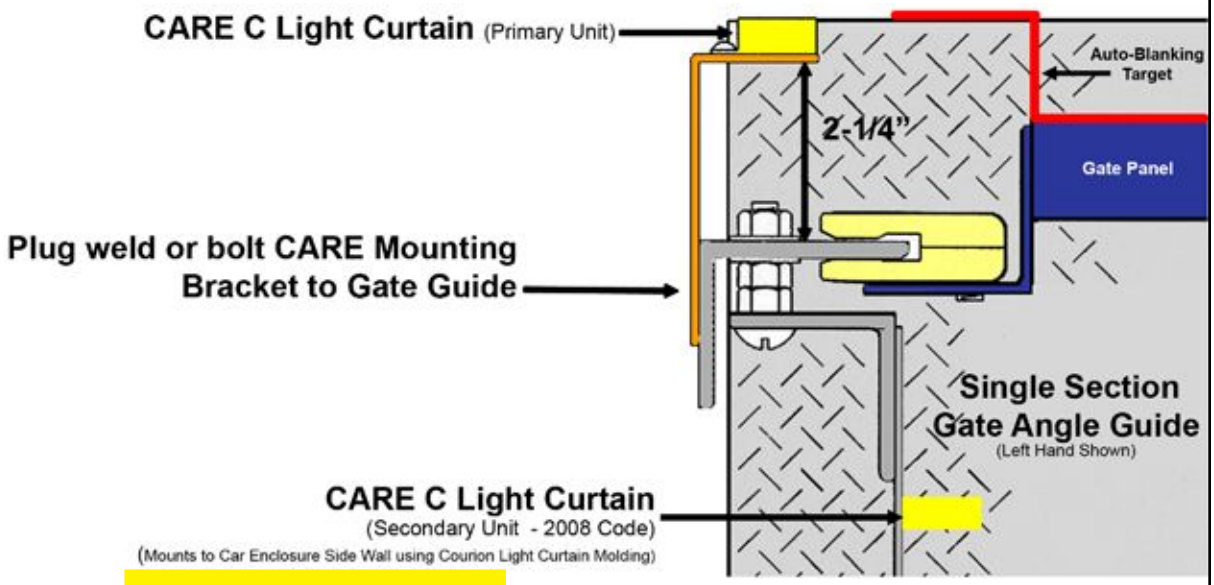

Mount Secondary Unit with Transmitter (Tx) and Receiver (Rx) opposite primary unit.

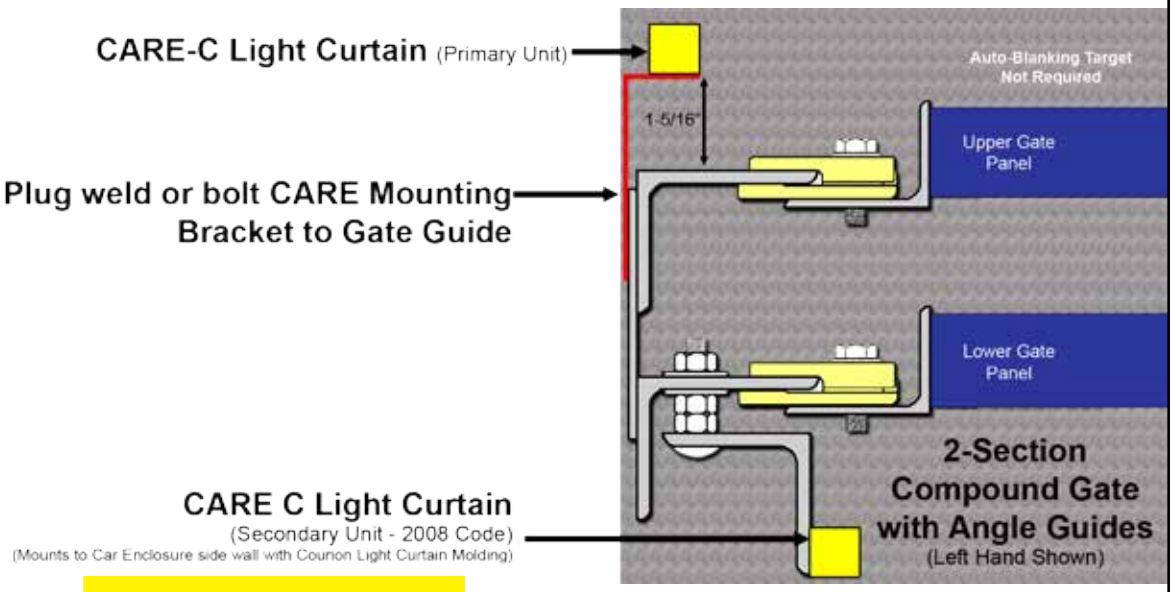

Mount Secondary Unit with Transmitter (Tx) and Receiver (Rx) opposite primary unit.

2 *Install Sensor Edges*

Mount the sensor edges to the Mounting Brackets with 3 screws provided by CEDES.

The sensor lenses (black dots on one side of the sensor edges) have to face each other.



3 *Mount The Control Unit*

Mount the CARE-C Control Unit to a stable and safe location on top of your Car Enclosure. If you have an iDRIVE.G Gate Control, you can mount it directly to the outside of the Control cabinet

IMPORTANT!
The CARE-C Cables are 16' long. Be sure to mount the Control Unit in a location that can be reached by the cables. If you require cable extensions, please call Courion

4 *Install the Auto-Blanking Target to the Reversing Edge*

Attach the Auto-Blanking Target found in Courion Hardware Kit #760 (Part #94-000760) over the Gate Reversing Edge Cover. Auto-Blanking Target not required on Courion P Style 2-Section Compound Gates.



5 *Connect the Light Curtain Cables*

If you have a **Cegard Max Light Curtain**, connect the cables from the Emitter and Receiver Edges to the Light Curtain Control Unit (White to White/Blue to Blue). Connect the Light Curtain Control Unit to the Courion Door Control using the Wiring Diagrams provided by Courion.

If you have a **Cegard GridScan/Mini Light Curtain**, connect the Emitter and Receiver Edges using the Synchronization Cable. Then plug the Connection Cable into the Blue Plug on the Receiver Edge and connect it to your Courion Door Control using the Wiring Diagrams supplied by Courion.

Cegard Grid/Scan MiniLight Curtain

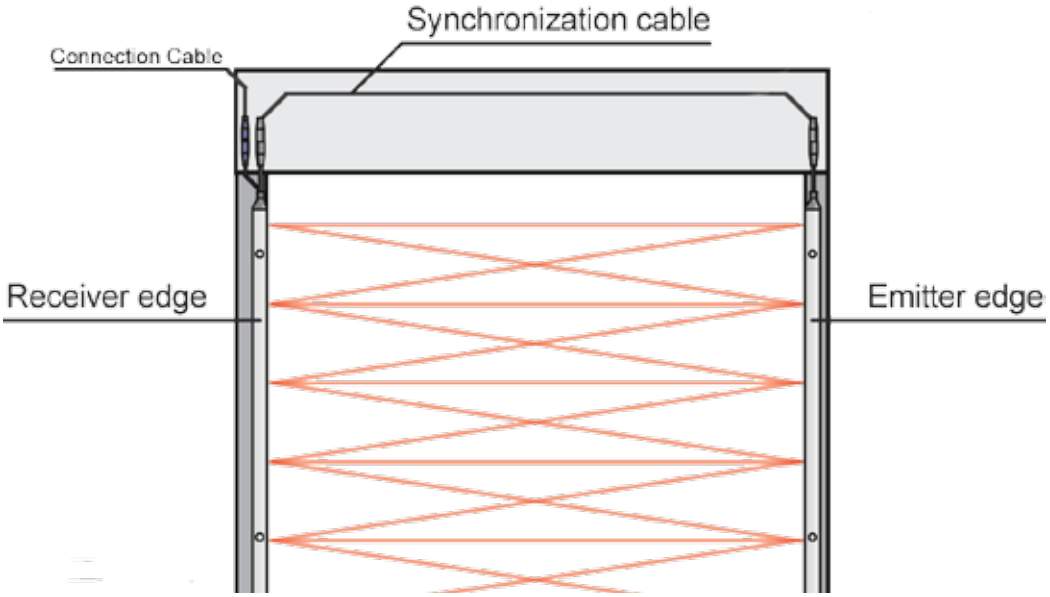

Cegard Max Light Curtain

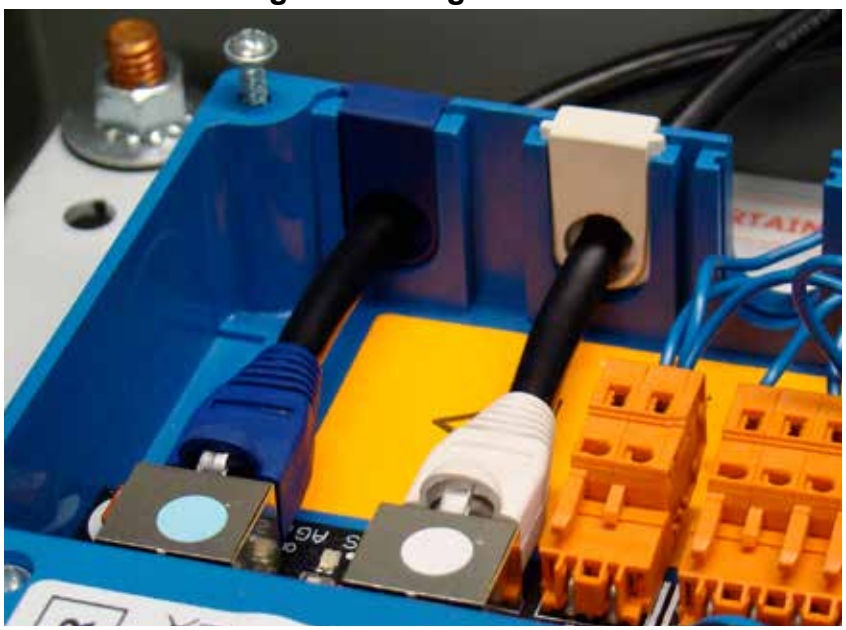

IMPORTANT!
Make sure the CARE-C cables do not run on top of or next to high voltage or VFD motor lines. These electric lines can cause interference with the CARE-C Light Curtain signals.

Cegard Grid Scan/Mini Operational Infomation

The following Operational Data is from Cedes, the manufacturer of the Cegard Grid Scan/Mini Light Curtains utilized by Courion with Next Generation iSYSTEMs. To make sure you have the latest version, visit www.couriondoors.com where this manual and related documents can be downloaded.

Overview

The Emitter and Receiver Edges create a grid of infrared beams offering up to 8.2 ft (2.5 m) in protection height. When the infrared beams are interrupted, the output sends a signal to the Courion Door Control. As soon as the hoistway opening is clear again, the output switches to indicate that the area is “clear”. The blanking system is designed to mount directly onto the leading edge of the Car Gate Panel. As the Car Gate closes, the Grid Scan/Mini recognizes the Car Gate and does not switch the output.

Alignment

The optical axis of the Emitter (Tx) and the Receiver Edge (Rx) need to be aligned towards each other to ensure the light curtain functions reliably. Reflective surfaces near to or parallel to the surveillance area can cause reflections and interfere with the Grid Scan/Mini functions. Keep a reasonable distance between the sensor edges and any reflective surface.

Door Blanking

The Grid Scan/Mini can differentiate between a light beam interruption caused by an object and a light beam interruption caused by the closing Car Gate. The Grid Scan/Mini does this by analyzing the different interruption patterns.

The light beam interruption of a closing Car Gate starts at the topmost beam going downwards. The lower end of the Car Gate needs to always cover at least one beam during the Car Gate closure.

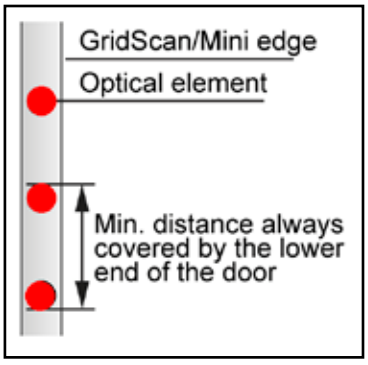

Test Input

To fulfill current code requirements, the Grid Scan/Mini must be tested by the Courion Door Control before each door closing cycle.

LED Status Description

Receiver Edge		Emitter Edge	
LED Green	Light Curtain Free	LED On	Power OK
LED Red	Light Curtain Interrupted	LED Off	No Power
LED Blinking Green or Red	Internal Malfunction		

Maintenance

Although the Grid Scan/Mini does not need regular maintenance, a periodic functional check is strongly recommended:

- Make sure the optical elements are clear of dirt and dust. If necessary, clean the front surface with a soft towel.
- Make sure the edges are securely fastened to the Courion CARE Mounting Bracket.
- Check the mounting position, cable routing, and connection of the sensors.

Troubleshooting

Emitter Edge (Tx)	Receiver Edge (Rx)	Action
LED off	LED off	• Check electrical connections.
LED off	LED Red	• Check the connections of the Synchronization Cable
LED on	LED always Red	• Make sure the hoistway opening is clear. • Check the alignment of the light curtain. • Check that the test input is connected to the test output signal of the Courion Door Control unit and that the signal level and logic are correct. • If the test input is not used, connect it permanently to 24V.
LED on	LED alway Green	• Make sure the sensor edges are not mounted close to any shiny or reflective surface.
LED on	LED switching between Red and Green without interruption	• Make sure that the cables and edges are located away from sources of electromagnetic interference. • Ensure that the Emitter and Receiver are correctly aligned and remain so during door closure.

Wiring Diagram: iLEARN System with CEDES Grid Scan/Mini- CARE Grid Scan/Mini wires directly to the iDRIVE.g VFD Gate Control Terminal Block using the Cedes Connection Cable.

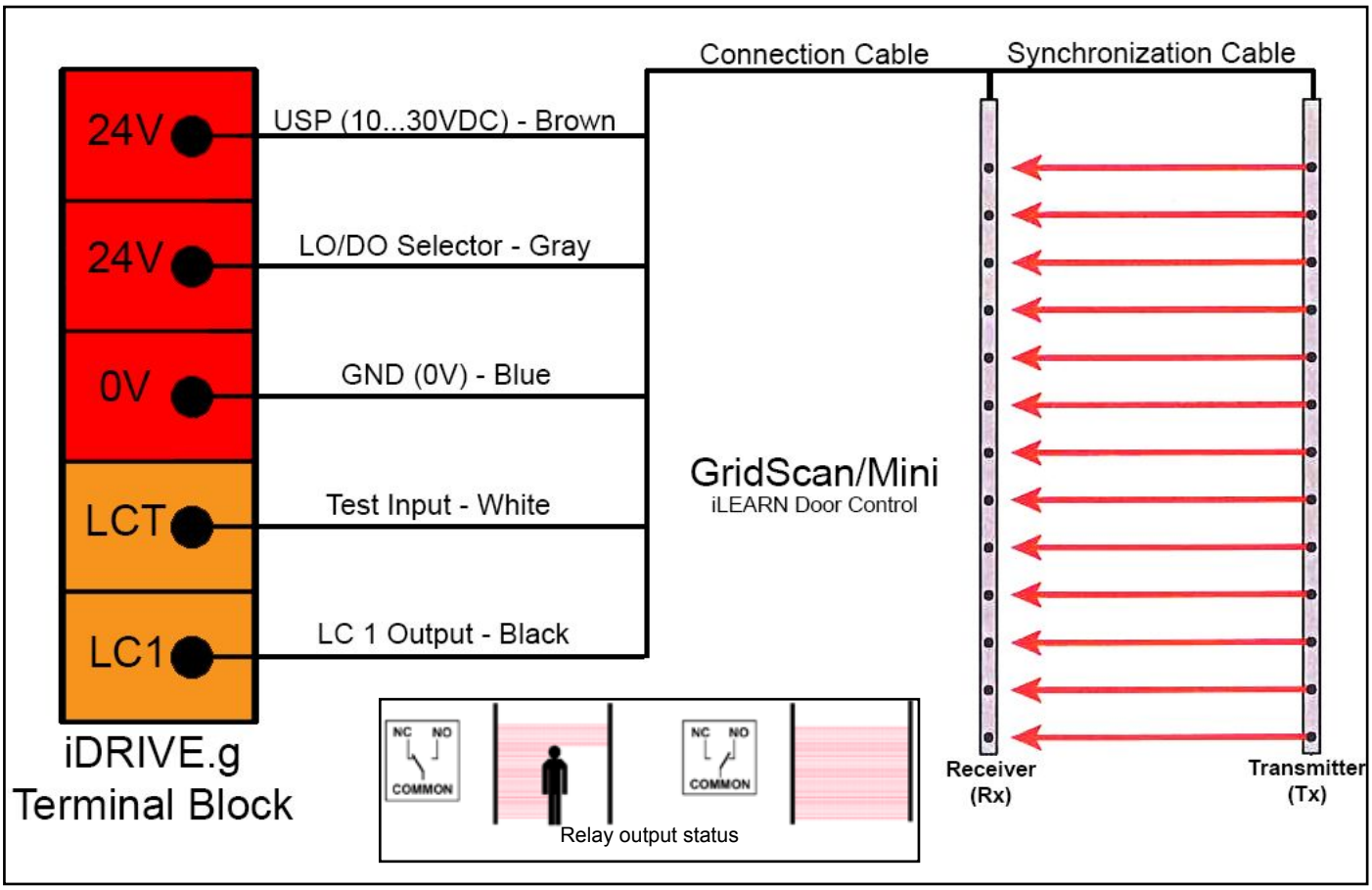

Cedes Universal Power Supply

The following Operational Data is from Cedes, the manufacturer of the CARE C Universal Power Supply which is used in conjunction with the Grid Scan/Mini Light Curtains on freight door jobs utilizing Courion's Model MP or Model E Door Controls. To make sure you have the latest version, visit www.couriondoors.com where this manual and related documents can be downloaded.

Power Supply Input - The CARE C Universal Power Supply has a unique universal power supply that operates within an input voltage range between 17 to 240 Volts AC or DC. No adjustment is necessary. The power supply automatically detects the voltage and adjusts itself for proper function.

Connect the protective ground terminal of the Control Unit to a protective grounded frame. Connect power to the Control Unit. The GREEN LED (power) should be ON. If all light beams are uninterrupted and the Test Input signal is at a high level, the output relay changes the status to "OK" and the YELLOW LED is turned OFF. If there are different LED readings, then go to the trouble-shooting section at the end of this Manual.

Wiring Diagram: MP Door Control with CEDES Grid Scan/Mini [Test Input Required] - CARE Grid Scan/Mini wires to the Courion MP Door Control via the CARE C Universal Power Supply.

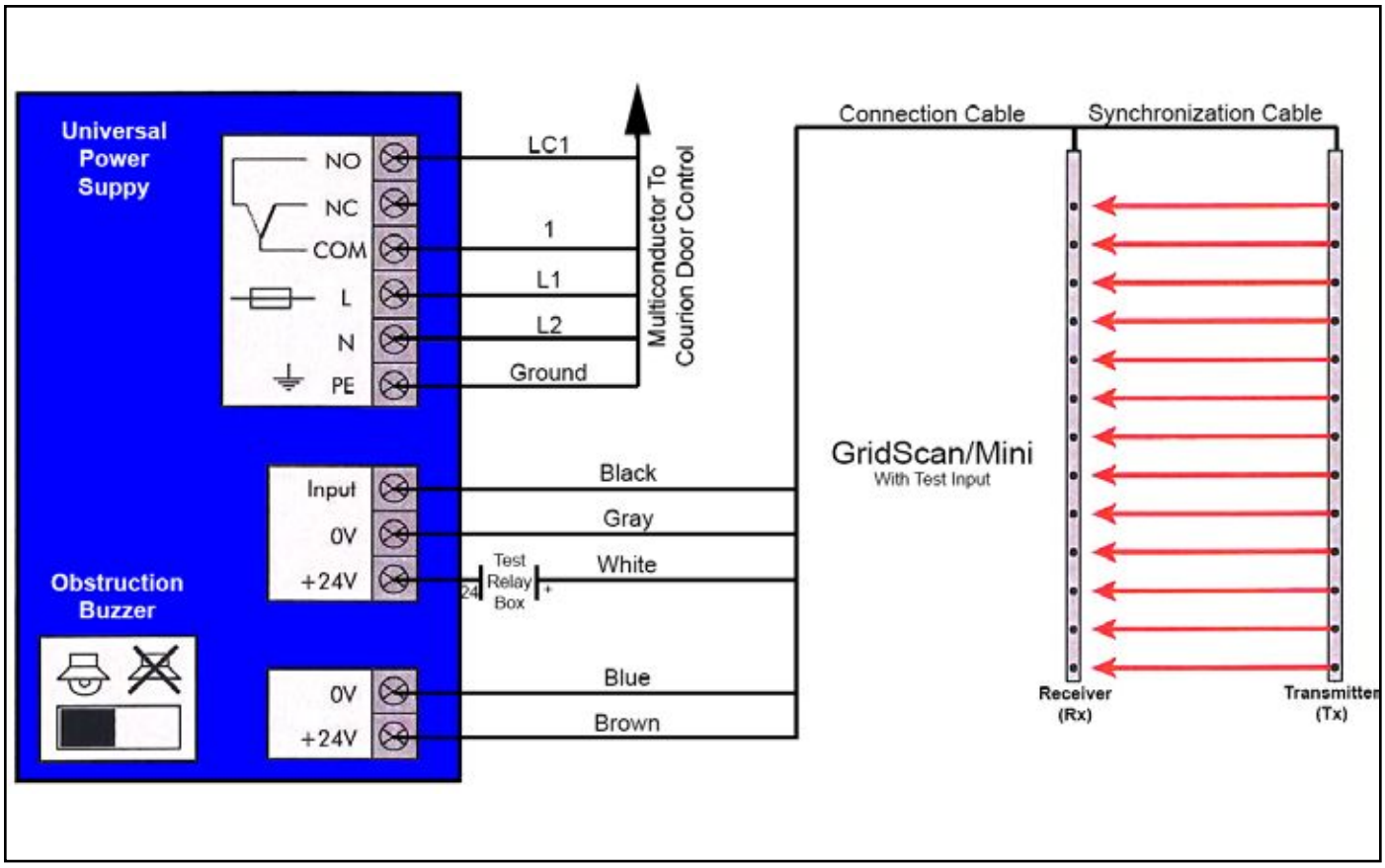

Wiring Diagram: MP Door Control with CEDES Grid Scan/Mini [Test Input NOT Required]
- CARE Grid Scan/Mini wires to the Courion MP Door Control via the CARE C Universal Power Supply.

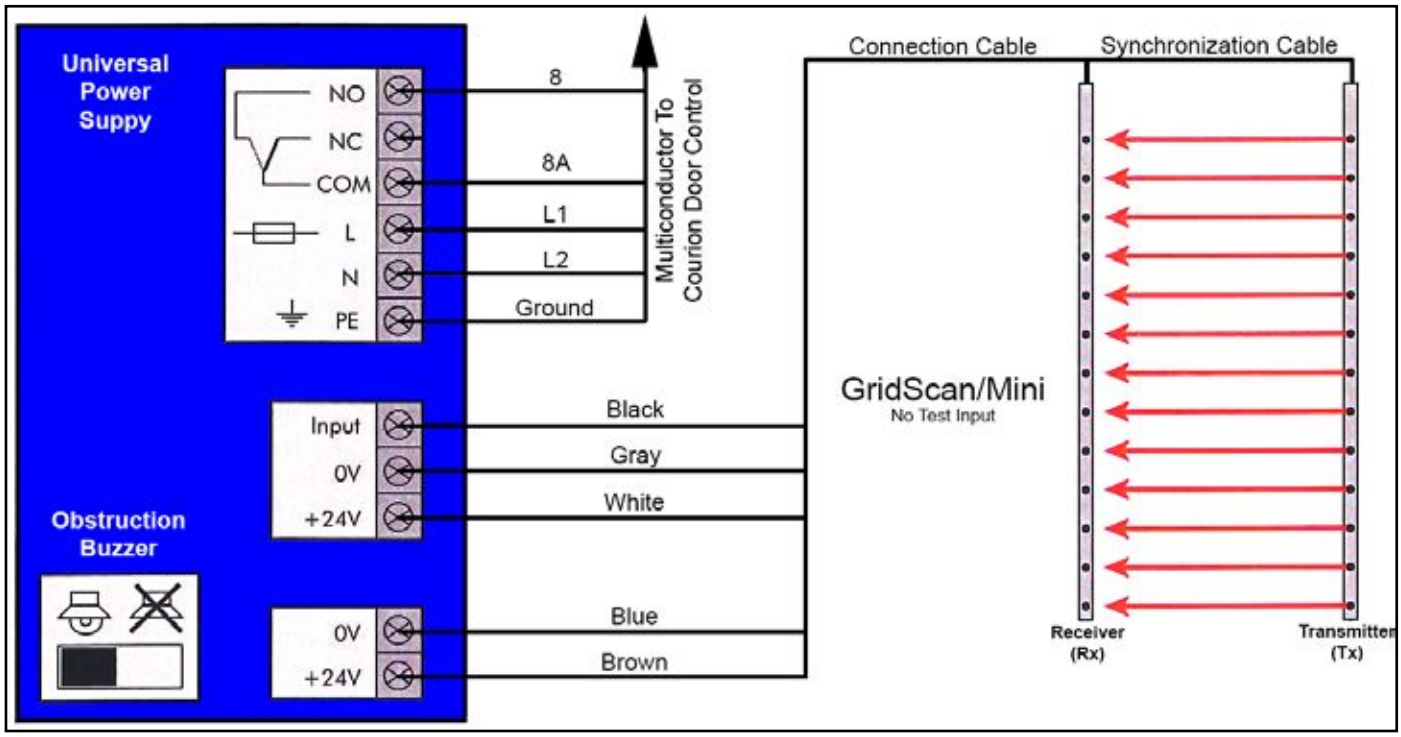

Operating Range Setting - The maximum operational range for the Grid Scan/Mini Light Curtains is 25.5' (10 m).

Buzzer - The CARE C Control Unit has a buzzer that is active when one or more beams are interrupted. The buzzer can be switched on and off with the slide switch located between the connectors of the sensor edges.

Test Input - The safety integrity check of the CARE C Light Curtain is initiated by a test input signal as follows:

1. In normal operation, the Test Input has to be set to high level. In this mode, the output relay follows the status of the light beams as shown on page 4.

2. Prior to the car gate closing, the Test Input has to be set to low level. The Output Relay changes its status to 'Stop' as if one or more beams are interrupted. This is the indication that the CARE C Light Curtain is performing an internal safety check.

3. If this internal safety check is successful (no failure detected) and no beam is interrupted, the Output Relay changes its state to 'OK' so the car gate can close.

4. If the internal safety check detects a failure of the CARE C Light Curtain, meaning that the device loses its safety functionality, the status of the Output Relay remains in the 'Stop' position.

Installation Notes

1. The sensor edges have to be aligned better than +/- 10°.

2. The sensor edges must not be bent or be exposed to tension.

Start-Up

1. Switch on mains and power up the Door Control and CARE C Universal Power Supply, when applicable.

2. Check the LED on both edges (power, status).

3. Test if the system is working correctly by letting the freight doors open and close, interrupting the light curtain during the closing of the car gate.

LED Status and Description				
Receiver Edge			Emitter Edge	
Green LED	Red LED	Sensor Status	Green LED	Sensor Status
●	○	Light curtain free	●	Power OK
○	●	Light curtain interrupted	○	No power or not within limits
◐	○	Start-Up (slow blinking)		
○	◐	Internal malfunction		

CART LIFT CARE-F LIGHT CURTAINS

❶ Mount the Transmitter and Receiver to the Gate Guide Rails using the pre-drilled holes provided by Courion.

❷ The CARE Power Supply can be mounted to the Car top at a location that is convenient for the elevator contractor.

❸ Adjust the Transmitter and Receiver so the the CARE sensors are aligned.

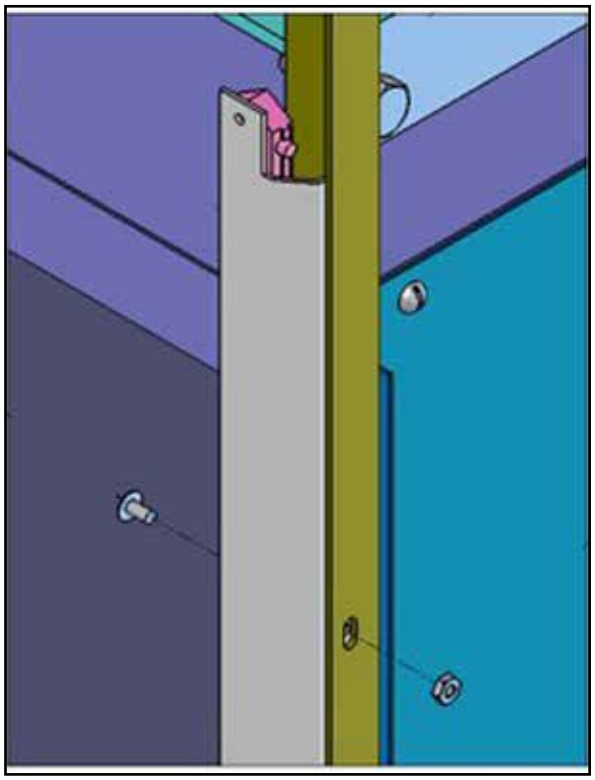

CARE-F CONTROL

POWER: The CARE-F Control Box can be powered by either 115VAC or 230VAC depending on the voltage of the available supply. Howerver, Courion recommends the following power connections:

- Call - Send Door Control: TB 2 to P and TB 3 to N
- Dispatch - Return Door Control: TB 3 to P and TB 91 to N

RELAY OUTPUT: Two (2) sets of change over relay contacts are provided to connect the CARE-F Control Box to the Courion Door Controller.

- Call - Send Door Control: TB LC to NC (normally closed) and TB 10 to Com
- Dispatch - Return Door Control: TB A1 to NC (normally closed) and TB A to Com

LED INDICATORS - The GREEN LED indicates that power is present. The RED LED indicates that the system has identified an obstruction and the output relay has dropped out.

Wiring Diagram: Cart Lift CALL - SEND Door Control with Formula Light Curtain

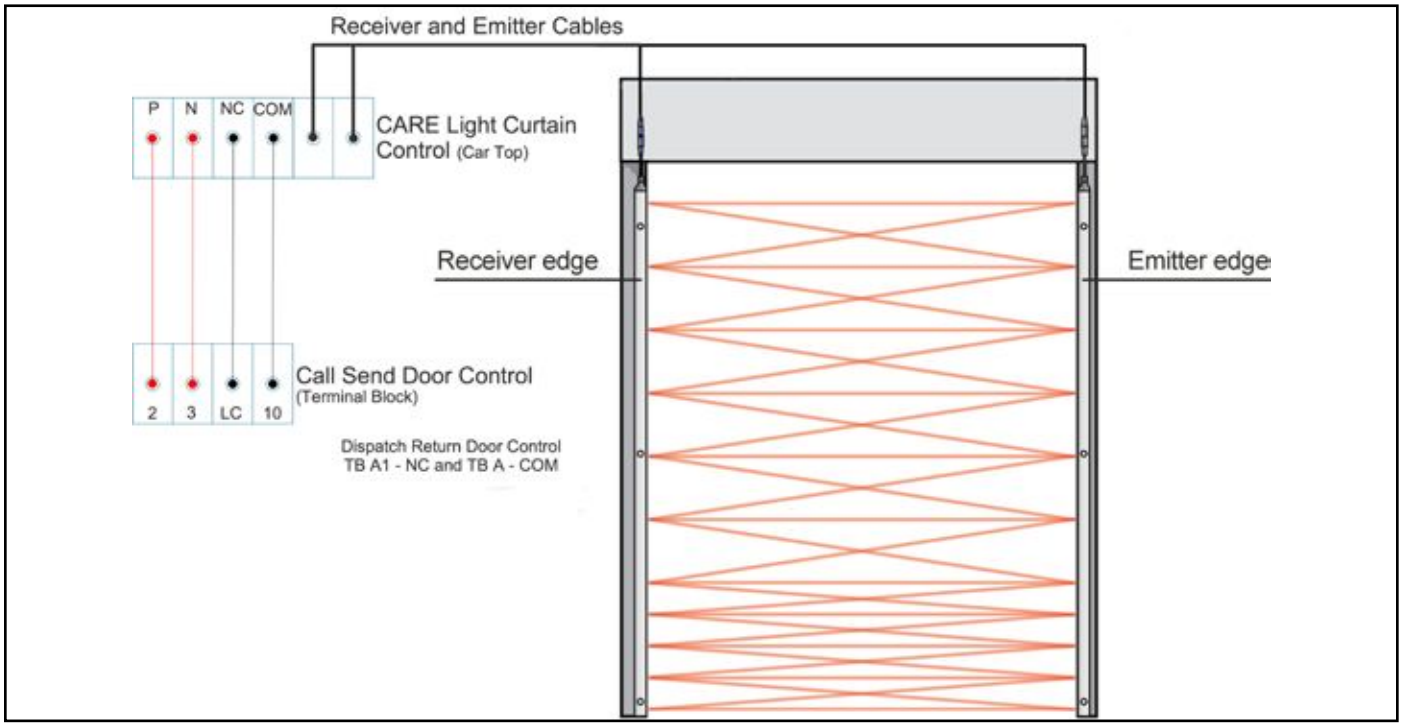

Wiring Diagram: Cart Lift Dispatch - Return Door Control with Formula Light Curtain

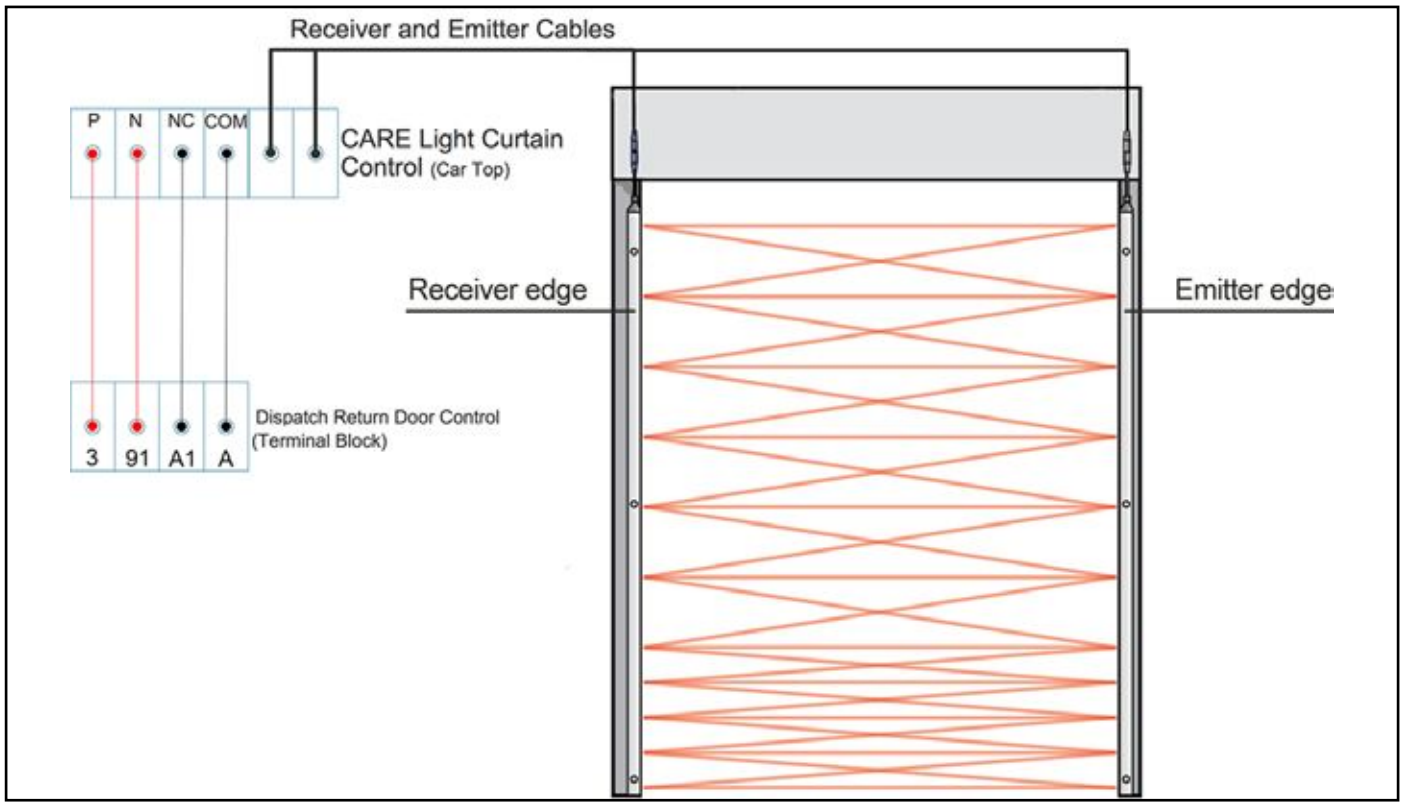

COURION
The Next Generation

THE NEXT GENERATION OF FREIGHT ELEVATOR DOORS

www.couriondoors.com

3044 Lambdin Avenue
St. Louis, Missouri 63115
(314) 533-5700 or (800) 533-5760
(314) 533-5720 (fax)
sales@couriondoors.com

MAD Communication System A17.1-2019

MosaicONE VMS



The Problem

In order to satisfy the A17.1/B44 2019 Elevator Code / IBC 2018 Building Code, all new and modernized elevators must be capable of establishing video and text communication between a rider and a monitoring station or security team.

The Solution

MosaicONE VMS is the complete solution for elevator emergency communications. Using existing phones and adding Video and Text Messaging capability, VMS delivers code compliance with minimal effort.

Streamlined surveying, ordering, installation, and maintenance minimize time on site for you and your team, while industry-leading security ensures you meet customers' requirements on every job.

Simple.
Seamless.
Superior.

Meet
MosaicONE VMS



What's Included

MosaicONE VMS is a complete system, not a collection of components. All hardware is factory assembled, wired and tested to ensure fast simple installation in the field.

- HD IP Camera
- 10" HD Matisse Position Indicator
- Car components in COP or on Cartop
  - includes battery backup
- Machine Room Box with Battery Backup
- Touchscreen Local Communication Panel (req. for <60' of rise)
- Cellular Modem and VOIP (*optional*)

With streamlined installation, assisted maintenance, and comprehensive security, MosaicONE VMS is designed to minimize your workload at every step of the process.

Simple.

Simple Installation

The factory assembled, pre-wired and tested system ensures minimum effort in the field. Our plug and play approach and integrated troubleshooting allows even the first time installer get it right the first time.

Simple Maintenance

01 Automated Status Alerts

If the system becomes disconnected, real-time alerts are sent to your team and displayed on the relevant position indicators.

02 Automated Diagnostics

Automated diagnostics identify which components require servicing. A maintenance report is sent to your team so they have the solution before they get to site.

Simple Code Compliance

Tell us how many cars, machine rooms, and floors the property has. We send you exactly what you need.

Seamless.

Seamless Compatibility

01 Non-Proprietary

MosaicONE VMS is compatible with any intercom/phone system, controller, contractor or monitoring station. Flexibility to choose today and in future.

02 End-to-End Solution

MosaicONE VMS comes with all required hardware, factory assembled, and wired. Your team will never deal with piece-meal assembly, field wiring, components by others or compatibility problems.

Seamless Security

We have taken care of the security, so contractors or buildings don't have to. Audited regularly by 3rd party Cyber Security Consultants the solution is kept up to date with latest CS standards.
Add to that A+ Ratings from services like Security Scorecard, SSL Labs, and OSWAP top 10, you can be assured you have chosen the solution that has security built in.

Seamless Updating

Adding a new feature or wanting to take advantage of enhancements in an updated version, our team can remotely update the hardware removing the need for special training or tools for the onsite mechanic.

Superior.

Superior Hardware

Carefully selected components from reputable suppliers ensure durability and minimize maintenance for your team.
All components as a system have gone through comprehensive testing (including environmental) to confirm compatibility, functionality, and reliability for the long term.

Superior Software

MosaicONE VMS is cloud-native and accessible from any computer or mobile device. With a dedicated team working on continuous improvements, security updates, and regular network maintenance, you can rest assured that the system will work reliably and securely in 20 years, just like it does today.

Superior Value

As part of the MosaicONE platform, every property with VMS benefits from a growing suite of products and features. From the included Digital Signage Software or Infotainment Feed, to add on products like Security Video Backup, elevator Usage Statistics, and Call Recording. VMS is not just about meeting code; it delivers real value to the property.

Key Benefits

Features

- Uses the Position Indicator as the in-car two-way text messaging screen. Additional screen not required
- Multiple screen sizes available: 5", 7", 10", 15", 21"
- Fully secure: end-to-end encryption, no open ports
- Complete System: no additional components needed, includes 4 hour battery backup
- Elevator phone agnostic: works with any elevator phone or intercom system
- Comprehensive "Line Monitoring" ensures all devices are communicating and external connections are up
- Flexible attendant/monitoring station interaction
- Message and video archiving for Monitoring Center
- A17.1/ B44-19, IBC 2018 and CBC 2019 code compliant

Premium Features

- MosaicONE Self Managed Digital Signage on same screen – or enable curated infotainment feeds to make it easy for the building to manage.
- Emergency Broadcast: post emergency messages on any screens within seconds to notify passengers of an emergency situation
- Backup of security footage from in-car cameras
- Notifications: online and via email of line monitoring, device health, and other statuses

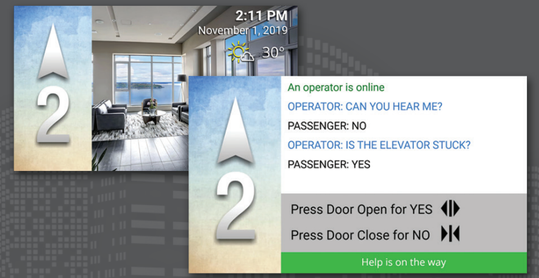

How Users Interact with the System

1. A passenger places an emergency call by pressing the phone/help pushbutton.
2. Through the existing emergency phone system, a call is placed to the on-site attendant or monitoring station.
3. At the same time, a MosaicONE VMS tunnel is opened.
4. The attendant/monitoring station answers the phone and begins a verbal conversation with the passenger.
5. If the passenger does NOT respond, the attendant/ monitoring station can visually confirm if there is a passenger in the car, and that it was not an accidental button press.
6. If passenger is present and has not responded verbally, the attendant/monitoring station can try to communicate with them by posting messages on the Matisse position indicator.
7. Passengers can either respond verbally or by pressing door open/close pushbuttons to answer “yes” or “no”
8. If there is still no response (or unable to respond i.e. unconscious), with the visual confirmation of a passenger present, attendant/monitoring station can dispatch appropriate emergency personnel

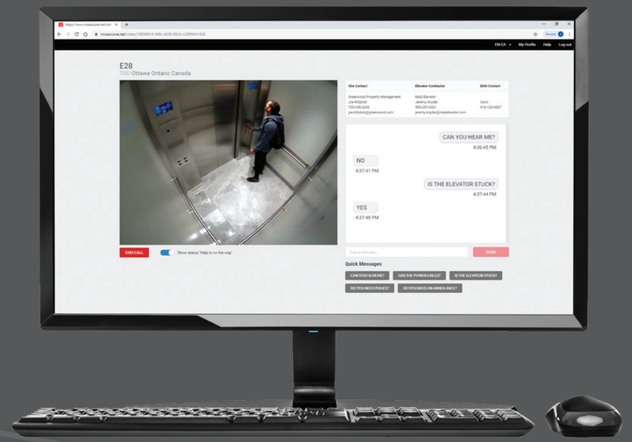

How the System Works

Offsite Monitoring

- The system monitors the phone/help button through a second contact
- When the passengers press the button, the system sees the “press” and a call is created in the MosaicONE Cloud (and locally on the Local Communication Panel)
- MosaicONE and the location communication panel show an incoming call request and waits for authorized personnel to answer – either locally on site or on MosaicONE.
- When the attendant/monitoring station Connects to the Call, an on-demand point to point encrypted connection is created between the monitoring station PC andthe elevator. This can be done either through a predefined HTTPS link, or in MosaicONE call center portal page.
- Through this live connection, video and messages are transmitted between elevator and monitoring station.

Onsite Monitoring

- Onsite personnel can access the system through a local interface for buildings taller than 60ft without external Internet connection
- Onsite personnel can view all elevators and interact via touchscreen when located at FCC or lobby location for Emergency Responders. Fireman can use system with gloved hand.
- Onsite Security location can interact via a dedicated computer
- Live video of all elevators is available to view at a glance to assess the entire situation quickly and efficiently. Selecting the elevator opens the communication screen.

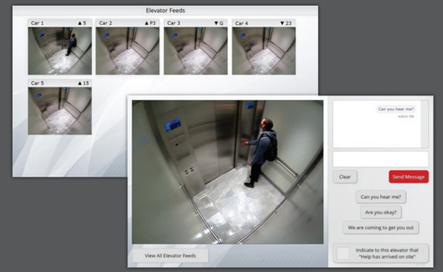

System Components

- **Machine Room Box** – The machine room box is the starting point of the VMS system. Housed inside is the Firewall (protecting the VMS system from outside penetration), Gateway (that manages the encrypted communication with monitoring stations), battery backup and where the internet is converted to run on a single twisted pair down the traveler up to 5,000 feet. One small prewired box can run entire groups of elevators.

- **COP Components** – Terminate a STP pair here to bring internet and communications to the car, as well as provide power and battery backup to your HD IP Camera and LCD Position Indicator / Message screen. Acts as a hub to bring communication and power to your devices in the car. Available in a COP Plate prewired assembly or a prewired Car Top Box depending on your needs.

- **Matisse LCD Position Indicator** - Mounting in the COP, this position indicator plays triple duty between Position Indicator, Digital Signage Screen and Emergency Communication Display showing text messages from the monitoring station. Available in different sizes and input formats allowing seamless compatibility with controller and side conditions.

- **Optional Emergency Communication Monitoring Board** - Located in the main egress hall station, this alarm board gives visual and audio notification of any system failure in addition to the audio line monitoring.

- **HD IP Camera** - With the option for COP or ceiling mount, Dome, or concealed camera, this captures the live video for the monitoring station. Optionally, share this camera with building Video/Security system to eliminate the need for 2 dome cameras in the elevator.

- **Door Open/Close Buttons** - Using the second contact or separate Yes/No buttons on COP, the passenger uses these to responding Yes & No to the monitoring station or local communication panel.

- **Lobby Panel/Local Communication Panel** - For jobs with over 60ft of travel, the code requires a communication panel for onsite emergency personnel to communicate with each elevator. This 15" touchscreen gives emergency responders a live video feed into every elevator, and the ability to communicate via text with the elevator. Optionally use Laptop instead of a 15" touchscreen panel, for desk locations with limited space.

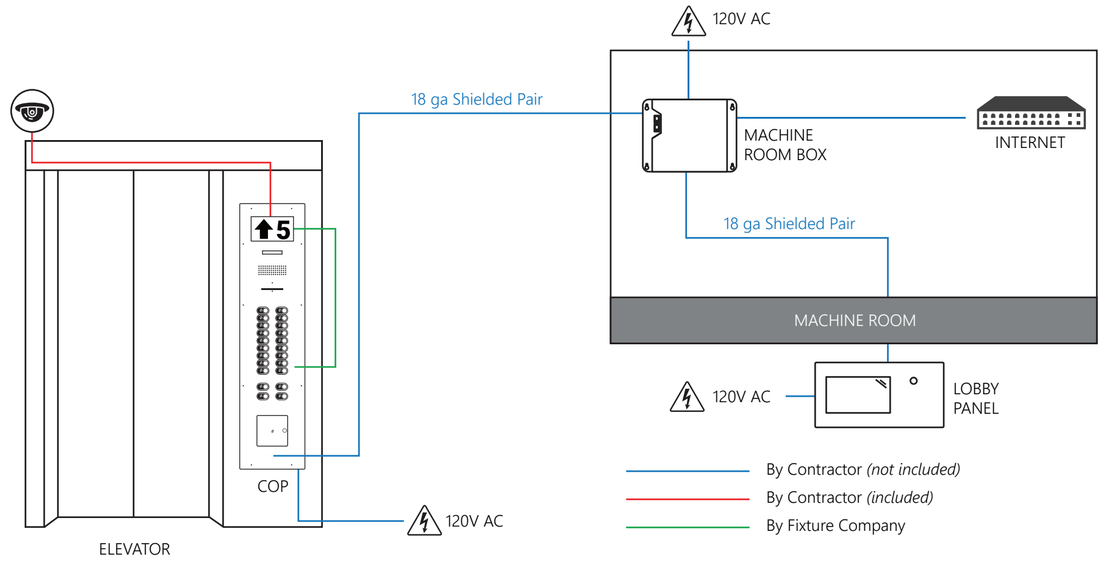

Installation

Simple, Seamless, Superior. All inclusive, Plug and Play, Installation and commission of the MosaicONE VMS system is quick and mistake proof.

- **Machine Room Box:**
  Mount the Machine Room Box using 4 bolts in the machine room or hoistway. Connections are only power (120VAC, 1A), internet (Cat5), and an 18ga shielded twisted pair to each elevator traveling cable and one to the local communication panel if applicable. The VMS system has its own firewall, so no special provision is needed for the internet connection.

- **Car Top Box:**
  When space does not permit for mounting components inside the COP, Car Top Boxes are provided to be bolted to the canopy or car top railing. Connections are: power (120VAC, 600mA), 18ga shielded twisted pair from the traveler, 18 ga 12V power to the Matisse in the COP, and 2 Cat5 (included for camera and Matisse).

- **Modem & ATA Box:** *(Optional)*
  The modem box should be mounted in the nearest location with a signal to the Machine Room Box. Provided antennas can be extended to achieve a good connection. Connections are only 18ga Power (12V) and Cat5 from the Machine Room Box. If optional VOIP is being used, an additional twisted pair from the phone line consolidator is required.

Note: *A dedicated 120V circuit with disconnect is recommended for the system. The circuit will supply the Machine Room Box and each elevator Car Top Boxes.*

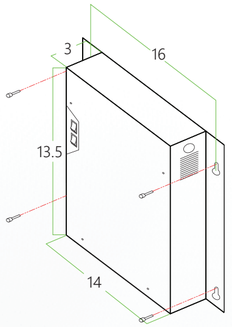

Machine Room Box

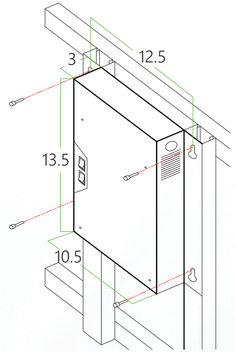

Car Top Box

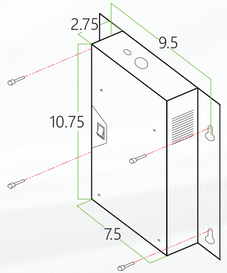

Modem & ATA Box

- **Local Communication Panel:**
  The Local Communication Panel is available as a surface or flush mount, depending on onsite requirements. The connection is only power (120VAC, 3A) and the twisted pair from the machine room box.

- **Line Monitoring Alarm Board:** *(Optional)*
  The Alarm board only requires 1 pair of wires from the machine room box.

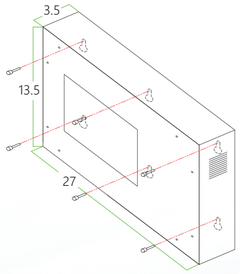

Lobby Control Panel

System Commissioning

- After installation, the system needs to be commissioned to properly route any calls to the correct monitoring station. The MosaicONE VMS system has an auto commissioning process to facilitate an error-proof setup.

- When the system is powered on, it automatically detects displays and cameras. By turning on one car at a time, the system automatically groups them, removing the need to manually identify and select displays and cameras for each car.

- A unique ID will be displayed on Matisse Position Indicator in each elevator. Calling this ID into your selected monitoring station, with a few mouse clicks, the elevator is now assigned to them.



Subscriptions

Offsite MosaicONE License Subscription

With traditional audio-only elevator emergency communication systems, the property owns the hardware and pays for the phoneline and the service of connecting the calls to a Telco. Software and computers were not required at each end.

To meet the code's requirements, not only does there need to be an internet connection, all systems require a cloud service, website, or 3rd party service to make the connection between the elevator and the answering agent's computer. This service, critical for communication functionality, is life safety and needs to be updated and functional for the life of the elevator.

The MosaicONE VMS License subscription ensures that our system is updated for security and functionality for the life of the elevator. It includes:

- Updates and Maintenance of Cloud servers
- Continuous privacy and security updates
- Updates to function with new client computers and browsers
- Constant monitoring for a 99% uptime

Onsite MosaicONE License

When call answer/monitoring is done onsite – usage of MosaicONE Cloud is not required. The MosaicONE VMS system for onsite monitoring is a closed system, provided that the onsite personal use the Local Communication panel or dedicated connected computer. As the system is not accessed by or connected to the outside world, the ongoing costs of maintenance, security updates, and compatibility do not apply. Therefore there is **No Subscription Required** for onsite monitoring. The software installed on the equipment today, isolated from the world, will continue to work throughout the elevator's life.

Cellular Data Subscription (Optional)

Using the optional MAD cellular modem makes the installation simple and seamless, however introduces the complication of who provides the SIM card with the data plan. To complete the package, MAD will provide and manage the data plan and bill monthly with the license fee.

VOIP Phone Line Subscription (Optional)

An internet connection is already required for the video/text component of the job, why incur the cost of an analog telephone line? The MAD VOIP Phone Line subscription removes the need of the separate Telco phone line and provides the hardware, phone number and SIP Trunk to provide an equivalent phone line for analog elevator phones. All equipment isfactory preprogramed, adding no effort or labor in the field. Just plug and play.

Call Answer Service Subscription (Optional)

Contact Centers have been answering the elevators phones the same way for 20+ years. Despite the simplicity behind the system and how the calls are managed, the video/text aspect of an emergency call is something that has never been in place before. Contact Centers or Authorized Personnel need to be trained on how to identify elevators equipped with this technology, how to access video/text. Depending on your Contact Center and their capabilities they may not be interested in taking on this extra responsibility. That is why MAD has partnered with several Contact Centers that have already been setup and trained. Clients can contract direct with the center or if preferred can be contracted through MAD for simplicity.

6635 Ordan Dr,
Mississauga, ON
L5T 1K6
Canada

1 (866) 967-8500
madelevator.com
customerservice@madelevator.com

This publication is for general informational purposes only. Product design is subject to change without notice. Actual product colors, finishes and specifications may vary from graphical representations.

Copyright © 2023 MAD Elevator Inc.

Part of DMG Group of Companies

Ver 1.3

MAD Fixture Catalog

PRODUCT CATALOG

Elevator Fixtures

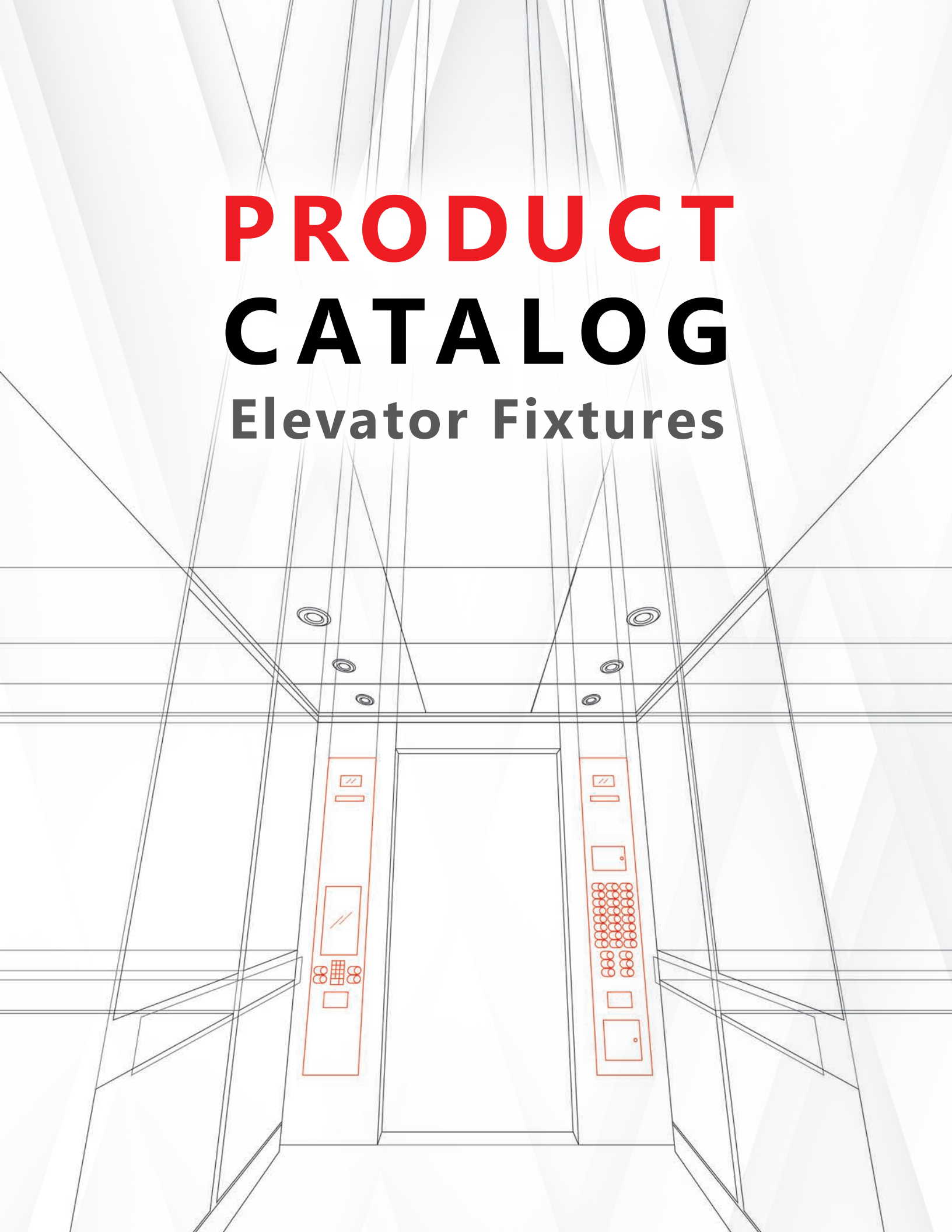

THE FIXTURES YOU SHOULD EXPECT

Elevator fixtures have the biggest impact on your passengers' riding experience.

More than just an interface, fixtures have become an accent piece to the cab interior finish.

Don't settle on the ordinary... **expect more**

CAR OPERATING PANELS

SAVOY COLLECTION 4
JULIUS COLLECTION 5
CAESAR COLLECTION 6
DUNE COLLECTION 7
COLOSSUS COLLECTION 8
CALIFORNIA COLLECTION 9
PLAZA COLLECTION 10
RITZ COLLECTION 11
GLASS 12
IMPULSE+ 13
GILDA 14
CONCEPT 15

HALL FIXTURES

HALL STATIONS 16
HALL LANTERNS 17
DESTINATION LANTERNS & KIOSKS 18

DIGITAL TECHNOLOGY

DESTINATION DISPATCH 19
MOSAIC - POSITION INDICATORS 20
ALTUS - LARGE FORMAT POSITION INDICATOR 21
TOUCH-TO-GO - TOUCHSCREENS 22
MosaicONE - MANAGEMENT SOFTWARE 24
MosaicONE - DIGITAL SIGNAGE 26
MosaicONE - VIDEO & MESSAGING SYSTEM 27
MosaicONE - LOCAL COMMUNICATION PANEL 28
MosaicONE - AUTO ALERT & CLOUD VIDEO BACKUP 29
CONCIERGE - TWO WAY VIDEO COMMUNICATION 30
GERM-FREE SOLUTIONS 32

PUSHBUTTONS

PUSHBUTTONS 34

SAVOY COLLECTION

The Savoy Collection is an economical fixture solution encompassing the BL & BD pushbutton line.

With the Savoy Collection you can combine push button and Braille options to achieve the desired effect.





OPTIONS

Illumination	Red, Green, Blue, White	
Tactile	Cast square brushed on black	
Upgrade	Any pushbutton style	
Plate Finish	Stainless Steel	

SS#4 COP shown with 4.3" Giotto TFT PI, BL Blank pushbutton, Cast square surface mount tactile, 2010 fire service upgrade provision and surface mounted switches.

JULIUS COLLECTION

The Julius Collection offers a low-profile pushbutton and tactile / braille combination that is both attractive and cost-effective.

The lack of any hard edges combined with our positive stop pushbutton, makes the Julius Collection one of the most vandal-resistant products on the market.

Through a combination of different material finishes, pushbutton styles and LED illumination, the list of possibilities with the Julius is virtually endless.



OPTIONS

Illumination

Red | Green | Blue | White

Tactile

Julius brushed on black with mirror surround

Upgrade

Any vandal round style pushbutton including BS Classic, Moon, California or BP Classic

Plate Finish

Available in #4, #8 Stainless Steel, #4, #8 Bronze and Oil Rubbed



SS#4 COP shown with 7" Giotto PI, BS classic pushbutton, Julius surface mount tactile and surround, 2010 code with a service cabinet.

CAESAR COLLECTION

The Caesar Collection is the first of its kind in the elevator market, with illuminated tactile it will set your facility apart from all others in design and functionality.

Conceived as a solution to improve the floor button visibility (car operating panel) in poor ambient lighting conditions, the ADA compliant tactile character is illuminated 24/7.



OPTIONS

Illumination		Red, Green, Blue, White
Tactile		Stainless Steel, PVD Bronze with blue, white or no illumination. Black with white illumination
Upgrade		Any vandal round style pushbutton including BS Classic, Moon, California or BP Classic
Plate Finish		Stainless Steel



SS#4 COP shown with 10" Matisse TFT PI with custom graphics, BS Moon pushbutton, Caesar white illuminated tactile, 2010 code with service cabinet.

DUNE COLLECTION

The Dune Collection is the offshoot of the Caesar Collection using a square vandal resistant pushbutton as opposed to round. The other identifying feature is the actual pushbutton face has a convex shape which gives it a very contemporary look and feel.

The Dune Collection makes for an ultra-attractive modern solution that will differentiate your facility from any other.



OPTIONS

Illumination		Red	Green	Blue	White
Tactile	Stainless Steel, PVD Bronze with blue, white or no illumination. Black with white illumination				
Upgrade	N/A				
Plate Finish	Stainless Steel				



SS#4 COP shown with 4.3 Giotto TFT PI with custom graphics, Dune pushbutton, non-illuminated tactile, 2010 code with service cabinet. Additional Features: Mirror and Stainless Inlay Work.

COLOSSUS COLLECTION

The ultra-large pushbuttons from the Colossus Collection serve a unique application. The large surface area (or pressel) on the push button is easy to see and activate, which makes it very appealing to those individuals with impaired vision, tremors or like disabilities.

Typically the Colossus Collection is tailor-suited to public facilities, including but not limited to, airports, hospitals, and sporting venues.



OPTIONS

Illumination	Red, Blue	
Tactile	Slimline, Cast Square brushed on black	
Upgrade	Not available	
Plate Finish	Available in #4, #8 Stainless Steel	



SS#4 COP shown with 7" Giotto TFT PI, Colossus pushbutton, slimline tactile, 2010 code with service cabinet.

CALIFORNIA COLLECTION

Our fully code compliant California Collection features the Atoll button.

Like an Atoll, a ring-shaped coral reef that encircles a lagoon completely, the button is comprised of a stainless steel ring surrounding a plastic fully-illuminated bezel.

The California Panel has evolved as a trendy design sought out by architects and designers across the continent, not only to comply with code, but also to improve the aesthetic in the cab.



OPTIONS

Illumination		White
Tactile	1	Flush Mounted Fishtail, white on black
Upgrade		Atoll
Plate Finish		Available in #4, #8 Stainless Steel #4, #8 Bronze and Oil Rubbed



SS#4 COP shown with 10" Matisse TFT PI with custom graphics, Atoll pushbutton, California Julius flush tactile, 2010 code with service cabinet.

PLAZA COLLECTION

The Plaza Collection offers an elegant solution for facilities (hotels, condos, class A commercial) where a high number of floor call buttons are required in a relatively compact space.

While the Plaza Collection was conceived as a resolution to a unique issue (maintain ADA heights with high floors buildings) the aesthetic has caught on and is used in standard applications as well.

This design has proven very popular in the greater New York market.



OPTIONS

Illumination		Red, Green, Blue, White
Tactile		Slimline brushed on black
Upgrade		Any vandal round style pushbutton including BS Classic, Moon, California or BP Classic
Plate Finish		Available in #4, #8 Stainless Steel, #4, #8 Bronze and Oil Rubbed



Oil Rubbed finish COP shown with 7" Giotto TFT PI, BP Classic pushbutton, Plaza Slimline flush mount tactile, Attendant Service, 2000 code with service cabinet. Additional Features: Flush Cam Lock and Card Reader Lens.

RITZ COLLECTION

The Ritz Collection offers a nostalgic look to the elevator interior. By using an adjacent "pin-mount" tactile/Braille, the net effect is one of sheer elegance.

The appeal is largely accomplished via the overall look of the operating panel and the attention to detail that is inherent in it's design. As each tactile character and each Braille pin is set individually in the car station, it has a craftsmanship quality that cannot be duplicated by other methods.



OPTIONS

Illumination

Red | Green | Blue | White

Tactile

Pin Braille-mount mirror, brushed or hand painted silver, black or gold

Upgrade

Any vandal round style pushbutton including BS Classic, Moon, California or BP Classic

Plate Finish

Available in #4, #8 Stainless Steel, #4, #8 Bronze and Oil Rubbed



Bronze #4 COP with 7" Matisse TFT PI with custom graphics, BS Moon pushbutton, Ritz pin mount tactile, 2010 service code with service cabinet.

CAR OPERATING PANELS

GLASS

Contemporary glass fixtures are becoming a popular alternative to traditional Stainless Steel car panels. Finally builders, architects and interior designers can bring the building's design not only into the elevator interior, but into the fixtures as well.

Our new prestigious Glass fixture line ties the modern and innovative concepts together. Its sleek look and functionality will be a great accent for your newly refreshed elevator interior.

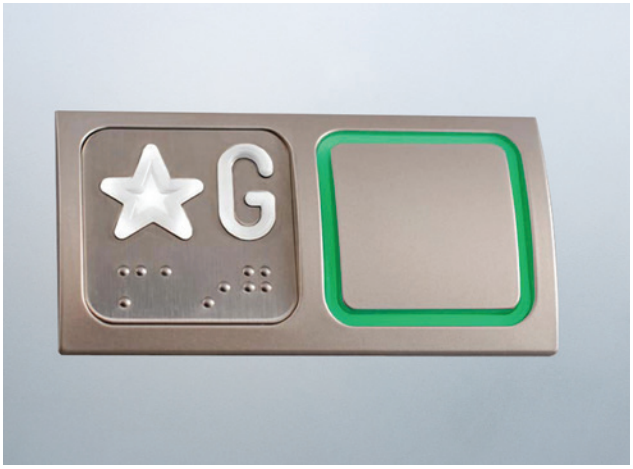

OPTIONS

Illumination

Red | Green | Blue | White

Tactile

Stainless steel with white, no illumination or cast brushed on black

Upgrade

Standard or California Dune pushbutton

Plate Finish

Available in any color or desired print in background



Custom back-painted code compliant glass, with 10" Matisse TFT PI with custom graphics, Dune pushbutton and surround, 2010 code with service cabinet

CAR OPERATING PANELS (RETROFIT KIT)

IMPULSE+

The Impulse retrofit kit is designed for the Dover Impulse elevator fixture.

A direct retrofit replacement means no dimensions or measurements to worry about, no cutting or complex installation methods.

The end result is a quick installation that minimizes your elevators down time, while upgrading your fixture to a more reliable vandal proof design.

The Impulse+ Retrofit offers a turn key solution while improving the elevator's reliability.

OPTIONS

Buttons/Tactile	All buttons/Braille tactiles available
Plate Finish	All materials and finishes available





SS#4 COP shown with 7" Giotto TFT PI, BS Classic pushbutton, Julius surface mount tactile and surround, 2000 code with surface mount service key switches.

GILDA

The Gilda Surface Mount Panel is a bold initiative and revolutionary concept that allows building owners to upgrade their elevator fixtures faster while minimizing down time.

The 15/16" deep car station can be manufactured at varying widths and lengths to accommodate whatever site conditions might exist.

The most salient feature of the Gilda is that there is no need to enlarge the car station opening in order to accommodate the new unit.

In a climate of escalating labor costs and shorter lead times, the Gilda Surface Mount Panel offers a real world solution.

OPTIONS

Buttons/Tactile	All buttons/Braille tactiles available
Plate Finish	All materials and finishes available

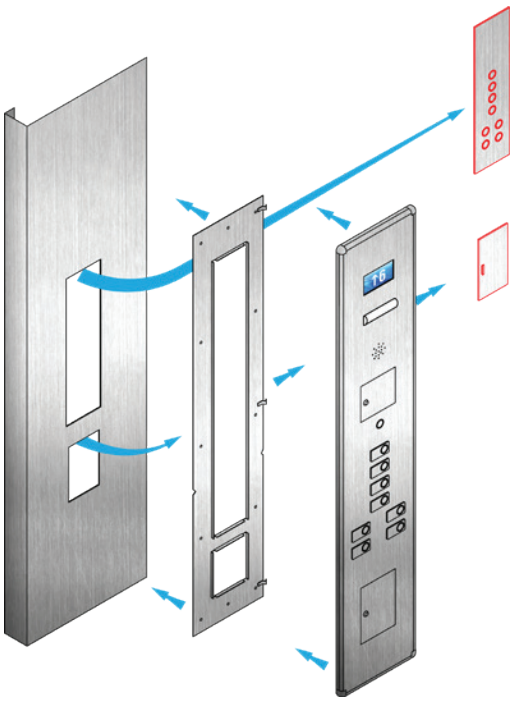



SS#4 COP with 7" Matisse TFT PI, BS Classic pushbutton, Julius surface mount tactile and surround, 2010 code with service cabinet. Additional features: flush mount parking levels color plates.

CONCEPT

If you can envision it, we can build it.

Our team of engineers and designers are always looking for a new challenge. Making a custom design and materializing the idea is what defines who we are.



OPTIONS

Illumination	Anything
Tactile	Anything
Upgrade	Anything
Plate Finish	Anything



Agglomerated Marble COP shown with 19" custom panoramic TFT PI, Julius surface mount tactile and surround, 2000 code.

HALL STATIONS

Our Hall Station collection is crafted with a quality that cannot be replicated. With numerous options we can match the look and feel of the building design and guarantee quality and compliance with the elevator and building code.

By offering a fully customizable experience we can provide different types of material such as stainless steel, bronze and glass with different mounting options.

Don't limit yourself, design the fixture your building deserves.



Flush Mount Terminal

OPTIONS

Illumination

Red | Green | Blue | White

Buttons

Available with MAD pushbuttons

Fixture Type

Gilda Classic, Corner and Curve Surface Mounts, Flush, Concealed or G2 Surface Mount.

Plate Finish

Available in #4, #8 Stainless Steel, #4, #8 Bronze, or Oil Rubbed.



Terminal G2 Surface Mount Hall Station with Tri-Flame etching, fire service and pushbutton.

HALL LANTERNS

Like our Hall Stations, we offer a fully customizable experience with our Hall Lanterns. We can provide different types of material such as stainless steel, bronze and glass along with various types of mounting options.

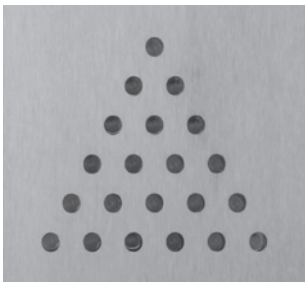



Left: Vandal Resistant Arrow, Right: Round Lens

OPTIONS

Illumination

Red | Green | Blue | White

Arrow Type

SA-130, ADA, Round, Vandal Resistant Arrows, or Vision Series (Acrylic or Glass). Digital TFT position indicators can also be included

Fixture Type

Gilda Classic, Corner and Curve Surface Mounts, Flush, or Concealed Mounting, or G2 Surface Mount.

Plate Finish

Available in #4, #8 Stainless Steel, #4, #8 Bronze or Oil Rubbed.





Left: Flush mount hall lantern with ADA Mini Arrows.
Right: Vision series hall lantern

The Machined Silk Cast Acrylic of the Vision Series Lanterns is an elegant solution for the modern day lobby. The glass aesthetic enhances the architectural finishes for the lobby and hall, while the bright LED illumination is easy to see in all ambient light conditions.

Custom lanterns available.

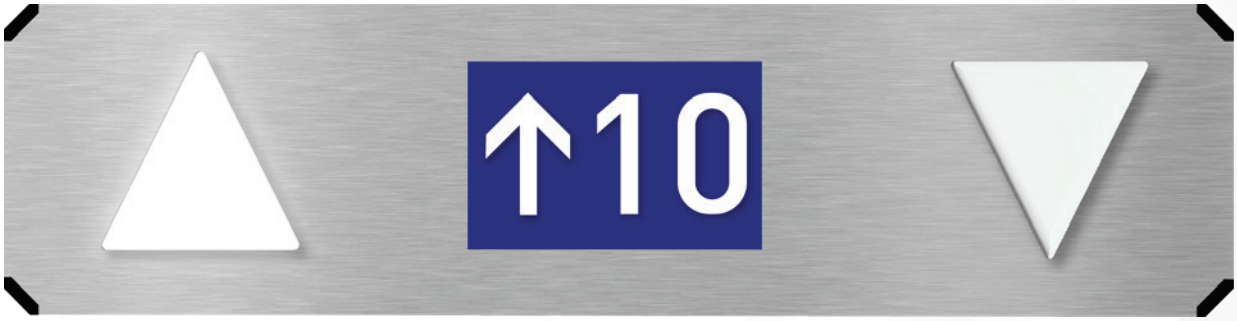

G2 Surface Mount hall lantern with ADA Arrows and Rafaello Position Indicator

DESTINATION LANTERNS

MAD offers a variety of Destination Lanterns to meet your project requirements. Choose between our Value Series, Standard series or Concept (custom) design. From a plate design to illuminated flag, we can match the design of your building. Puck replacement and Ray Blade lanterns also available.



OPTIONS

Illumination

Red | Green | Blue | White

Fixture Type

Surface Mount, Flush Mount, Flag, Puck, Ray Blade

Plate Finish

Available in #4, #8 Stainless Steel, #4, #8 Bronze, Brushed Black, Acrylic, Glass

Letter Type

Standard or Custom Font in Acrylic or Glass

DESTINATION KIOSKS







FLUSH MOUNT SOLUTION

SURFACE MOUNT SOLUTION

The Destination Dispatch Kiosks provide a touchscreen solution with an enhanced user interface for your elevator passengers. Bring a versatile high-end look to your building and provide your passengers with a fixture that not only gets the job done but feels good when using it. This leading technology is non-proprietary, so it's seamlessly integrated into your building.

DESTINATION DISPATCH

DOOR-IN-DOOR SOLUTION



The Door-in-Door solution allows a single set of push buttons to be used for both fire and regular service. The inner door acts as the service cabinet providing access to both the button and service key-switches, while the outer door provides additional access to the fire service controls.

TOUCHSCREEN DESTINATION SOLUTION



Upgrade the Destination Dispatch COP with a Touch-To-Go touchscreen. While in DD mode, the TTG screen can act as a next-destination indicator, a digital signage board, or used for 2-way video communication. In independent or fire service mode, the graphics will automatically change, allowing the passenger to select destination floors and eliminating need for 'hidden' mechanical pushbuttons.



POSITION INDICATORS



MOSAIC

Redefine your elevator with a modern Position Indicator.

Matisse: The premium option available in the TFT designer's series. Featuring a fully networkable unit with widgets, news, two-way video capabilities and live video streaming. All screens are designed on the cloud (networked). It is available in 7" up to 21".

Giotto: The mid-range of the new TFT designer series with its multicolor graphic Position Indicator. Available in 4.3" & 7".

Raffaello: The micro version of the three balances both cost and functionality. Perfect for integrating Position Indicators in your hall fixtures design or lobby panels. Available in 2.8".

- ✔ High resolution & fully customizable graphics
- ✔ Integrated voice annunciator
- ✔ Two-Way video capable (Matisse)
- ✔ Programmable audio and video messages
- ✔ Self administration with easy-to-use Mosaic software

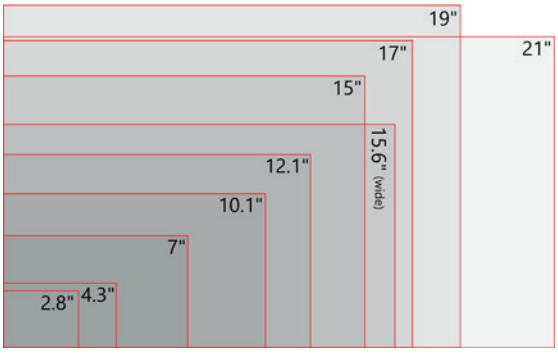

Available screen sizes listed above

LARGE FORMAT POSITION INDICATOR

ALTUS

Combining the Mosaic Position Indicators, Matisse Digital Signage, and per floor messaging of Touch-To-Go, the Altus is large enough to take advantage of all the functionality in one. Available in 19", 28", 38" and 48". Can be positioned landscape or portrait.



- Remote admin and updatability
- Fully customizable
- Time, weather, social media, news (RSS feeds), videos, photos, and HTML content
- 'This Floor' and 'Next Stop' interactive messages
- Live video input & two way video capable
- Digital signage

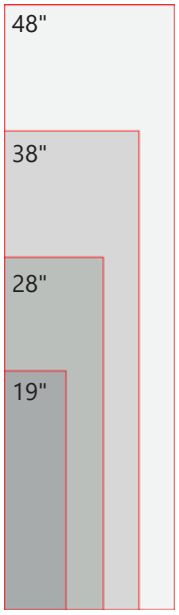

Custom sizes available.

Standard sizes listed above.



SS#4 COP shown with 48" Altus PI, Dune pushbutton and Surround with Cast Tactile

TOUCHSCREEN COP SOLUTION

TOUCH-TO-GO

Using vibrant, easy-to-read, color touchscreens linked to a custom control system, our elevator touchscreen systems create a distinctive experience that will have a high impact on the passenger and enhance the usability of the elevator.

- Interface with any elevator controller
- Remote admin and updatability
- 21" HD or 15" HD LED display with a viewing angle of 178 degrees
- Security system integration
- Vandal-resistant & code compliant
- Operated with finger-touch or with a gloved/covered hand
- Images, video, live video, live news ticker, weather and 2-way video capable
- Easy-to-clean surface with any glass approved solution

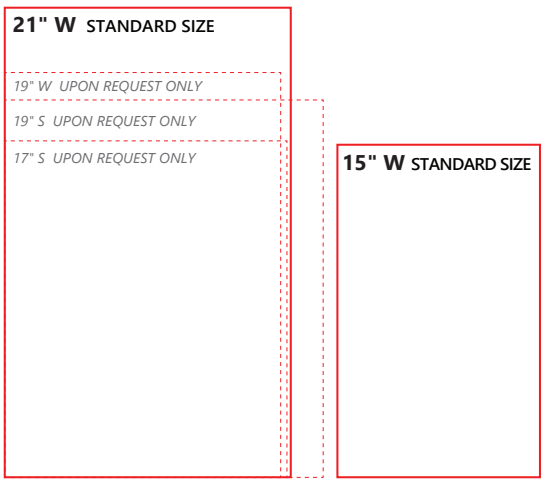



SS#4 COP shown with 10" Matisse PI, BS classic push button, Caesar surface mount non-illuminated tactile, ADA compliant key pad, 21" Touch To Go Touch Screen, 2010 service code with service cabinet.

Upgrade your traditional pushbuttons. Add a fully-interactive, customizable feature to your premium cab interior. Our unrivaled touchscreen allows for changes to graphics on an as-needed basis. User-defined areas available to update at any time via MosaicONE cloud-based management software.

RESIDENTIAL & HOTEL

Brand your elevator and keep your residents and guests informed with message boards, which can be scheduled to automatically update. Change the displays for special occasions such as holidays or events.

Architectural renderings can be incorporated into the graphics to identify destination floors when selected.

Highlight building amenities and commonly used services such as pool, spa, or restaurants. Instructions can also be added to the screen (ex. scan access card).





HOSPITAL & AIRPORT

The smooth glass surface is easy-to-clean with any glass-approved solution. When Special Service is activated (such as Code Blue), graphics automatically change to a simplified layout, including instructions for passengers.

Colorful, high-contrast graphics and large touch areas make the screen easy-to-read and use in a for a variety of passengers, including in multi-lingual facilities. The wayfinding feature incorporates interactive maps of the facility for easy orientation.

Calls can be made by finger-touch or with a gloved/ covered hand.





UNIVERSITY & COMMERCIAL

Keep students up-to-date on Sports functions with live Twitter and news feeds.

Interactive informational pop-ups can offer more details to items of interest, such as upcoming campus events.

Providing tenant names and descriptions assures visitors that they are headed to the correct floor, while also promoting the corporate identity of each tenant and of the building.

Commercial jobs can include universities, malls, office buildings, stadiums, libraries, museums, and more.

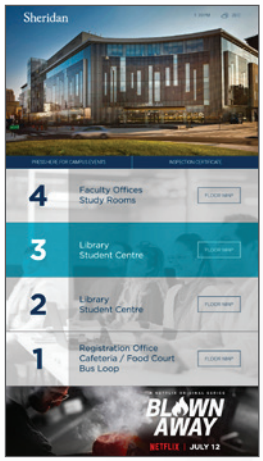



For more info, visit madelevator.com

MANAGEMENT SOFTWARE

One software to manage all devices.

The MosaicONE Platform is a cloud-native software that allows a user from any location with an Internet connection to update and manage any of the networked devices from MAD.

The theme designer allows you to create or edit the displays whenever and wherever you want! You can do it all yourself, or delegate responsibility to other users.

- News, Stocks & RSS feeds
- Time & Weather
- Pictures & Video
- HTML Content
- Position Indicator
- Per Floor Messaging
- Fully Customizable

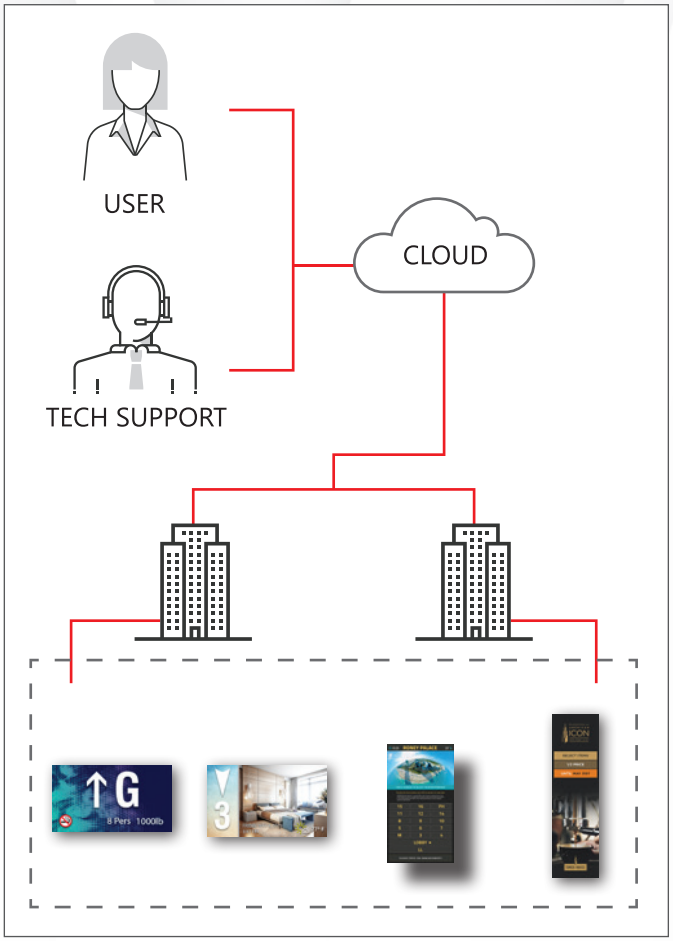

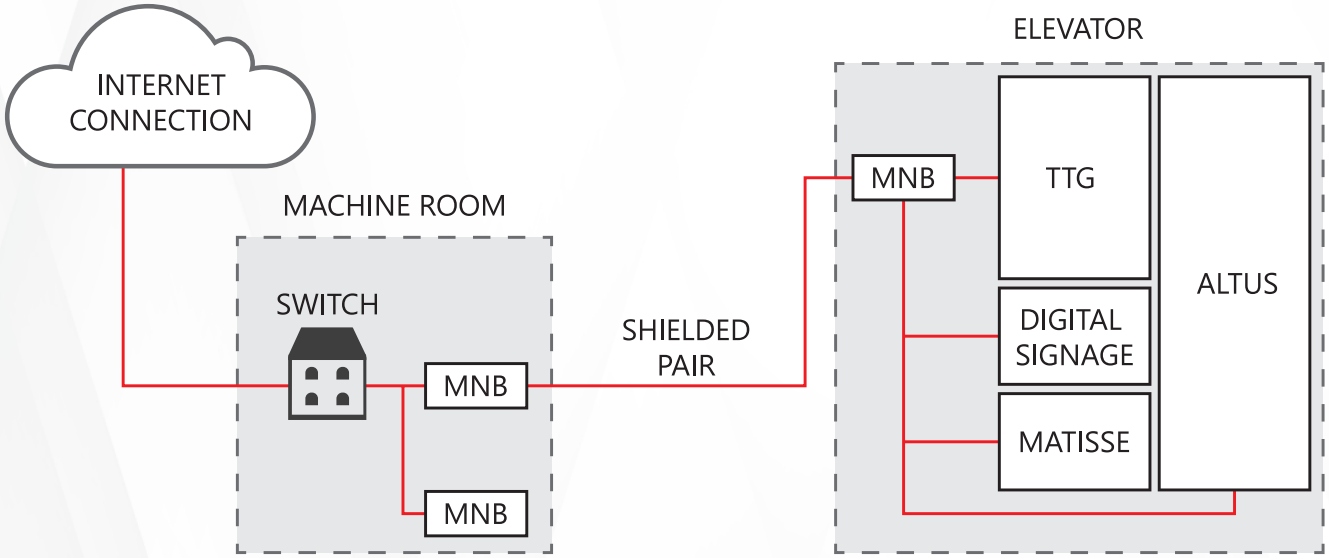

MNB = MAD Network Box

WHAT CAN YOU EXPECT?

Manage all your devices from one browser login. With just a few clicks, schedule important notices days, weeks or months in advance for display at the assigned time on the appropriate day.

The easy-to-use platform enables you to create powerful digital signage using any type of content. Design, preview and publish your content from anywhere at any time. Notices can include events, directories, images, news feeds, weather, video, and more!

SIMPLE AND CONVENIENT USER INTERFACE

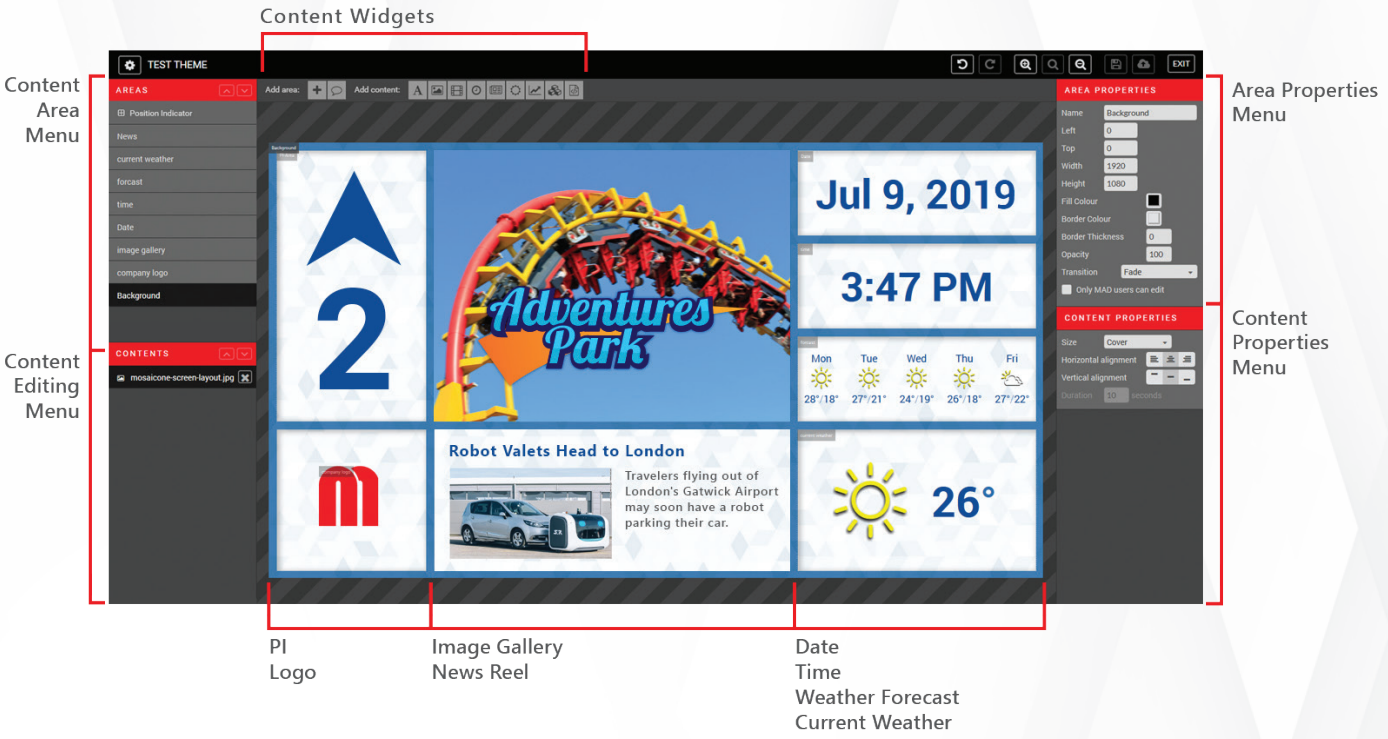

✔ Matisse ✔ Altus ✔ Touch To Go

DIGITAL SIGNAGE

The Matisse digital signage brings the elevator notice board into the 21st century. Using customized top-of-the-line LCD screens and software suites, the Matisse digital signage can suit virtually any foreseeable need.

Software: All Matisse come with MosaicONE software to create powerful digital signage for any content at anytime.

MAD offers a variety of design services for those who don't have an in-house graphic design team or admin support available. Together we will create a passenger experience you can be proud of.

For more information or to inquire about pricing and options, please reach out to designservices@madelevator.com.



- Time & Weather
- News & RSS feeds
- Pictures & Videos
- Text (ex. notice boards)
- Scheduling
- HTML content
- Fully Customizable

Flush Mount available in: 10", 12.1", 15", 17", 19", & 21".
Can be positioned landscape or portrait.

Surface Mount available in: 15"



SS#4 COP shown with a 10" Matisse digital signage screen, 4.3" Giotto TFT PI, BS classic pushbutton, Julius surface mount tactile and surround, 2010 code with a service cabinet.

VIDEO & MESSAGING SYSTEM

MosaicONE Video & Messaging System by MAD Elevator is a Cloud-Native, End-to-End Encrypted, Non-Proprietary solution built to meet the new A17.1/B44 2019 and IBC 2018 communication requirements. When the phone button ispressed, answer and view an HD video feed with 2-way text messaging from anywhere with an Internet connection. Everything happens instantly. Install it by hooking up power and ethernet. That's it! Monitor each component, LAN, WAN, Video, Display and Battery backup, and get system notifications in real-time.

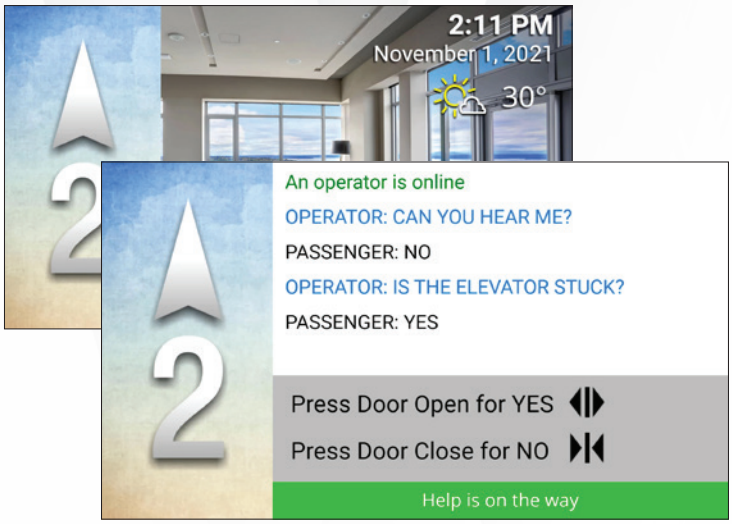

- Non-proprietary: Can be used with any monitoring center and any phone system.
- Closed Firewall and Encrypted Communications.
- System includes battery backup to ensure 4 hours of functionality in the event of a power failure.
- Plug and Play installation: ready to use after connecting to power and network.
- System access from local FCC panel and remote Monitoring Centers.
- Full system trouble monitoring and notification.
- Accessed locally by building or from any web browser with an Internet connection.
- MosaicONE Digital Signage included.

Messages are posted in real-time on the lobby panel and elevator position indicator screen via MosaicONE Cloud. The operator has the ability to write a custom message, or select from pre-written messages. Passengers can message "Yes" or "No" responses back to operator via the Door Open & Close pushbuttons. Live encrypted video of elevator interior is available to the remote monitoring station, on-site personnel and fire control panel.

MosaicONE VMS comes as a complete system including camera, in-car screen, networking equipment, and battery backup. For more info, visit madelevator.com/VMS.

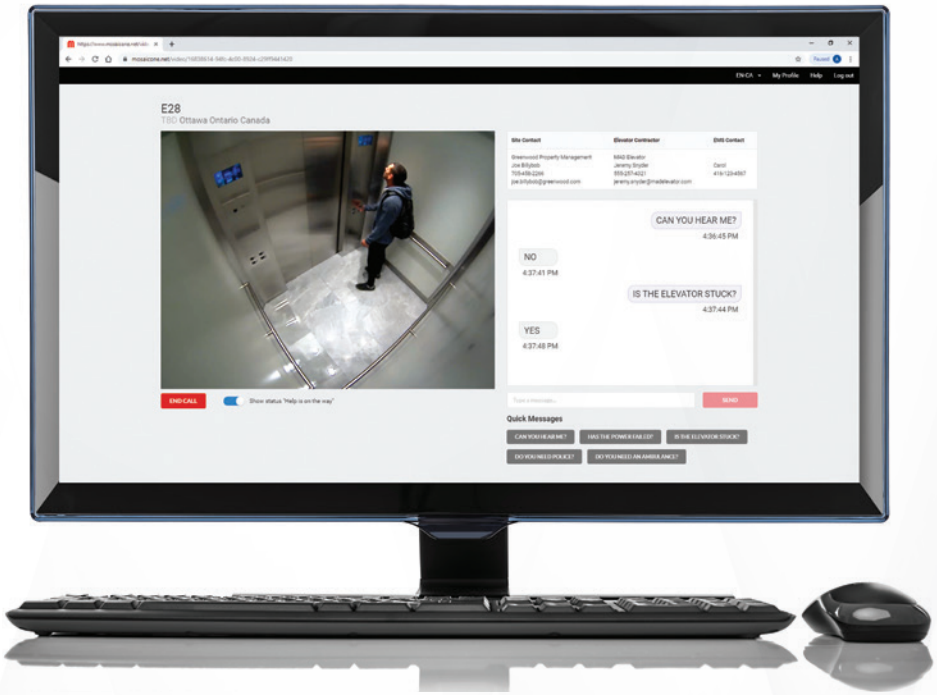

Audited by Cyber Security Experts

A+ SSL Labs

100% Security Scorecard

LOCAL COMMUNICATION PANEL

Give your personnel the ability to monitor elevator communications for all elevators in your building to determine the extent of an emergency. Available in 2 configurations: Lobby panel fixture with a 15" touchscreen, or a standard computer for your monitoring office. Either will enable you flexibility in your on-site monitoring configuration.

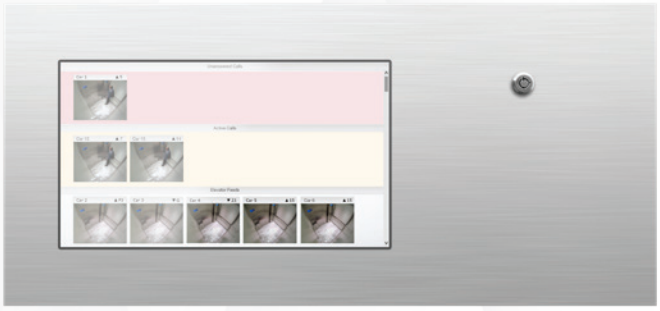

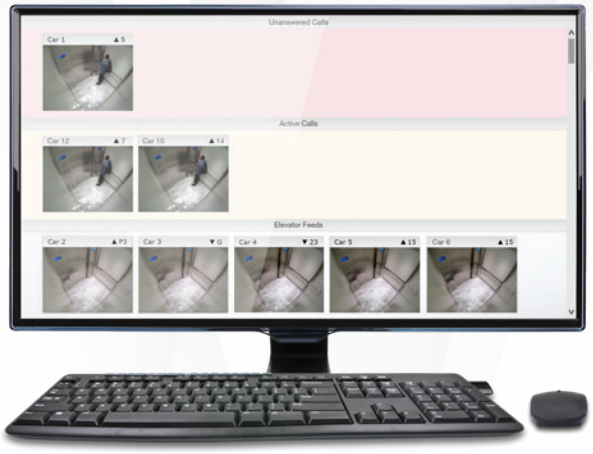

15" TOUCHSCREEN LOCAL ACCESS PANEL

15" touchscreen for security desk or mechanical room. On/Off key switch for authorized personnel use only. Works with a gloved hand for firefighter use.

24" COMPUTER LOCAL ACCESS PANEL

24" Computer monitor option for security room monitoring a large amount of elevators. Includes needed hardware for internet back to elevators and a 4 hour battery backup.

- All elevators connected to one local panel/computer.
- Connects to elevators via Local Area Network, so internet is not required to run.
- Add second monitoring location by using MosaicONE cloud interface to make and receive calls.
- Installed beside your existing answering point for elevator phone calls.
- Local panel has priority - Can take over existing cloud - elevator calls.
- All events, text communications, and video frames backed up in MosaicONE cloud via internet connection.
- Lobby Panel version mounted portrait or landscape.
- Connects to power via 120VAC hardwired or wall plug

AUTO-ALERT



With MosaicONE Auto-Alert, building owners and elevator contractors will receive an email notifying them of any network, hardware, or communications events that may occur in a building they manage or service. Auto-Alert notifies users in the event of network/hardware issues or even if someone vandalizes a camera in a particular elevator. And if an elevator's phone is used, building managers are aware before being notified by monitoring personnel; saving time and site visits.

CLOUD VIDEO BACKUP

The MosaicONE Cloud Video Backup lets users access recordings from previous weeks without installing traditional fully wired security system hardware or software. Either as a standalone MosaicONE feature or through the VMS infrastructure, users can simply download the footage from the cloud on-demand.

- ✔ Safely and privately store video footage from inside your cab
- ✔ Avoid the limitations of physical storage
- ✔ Cloud-based storage enables instant retrieval of footage from any device
- ✔ Spot acts of vandalism and identify those responsible
- ✔ Secure encryption network prevents data breach or loss

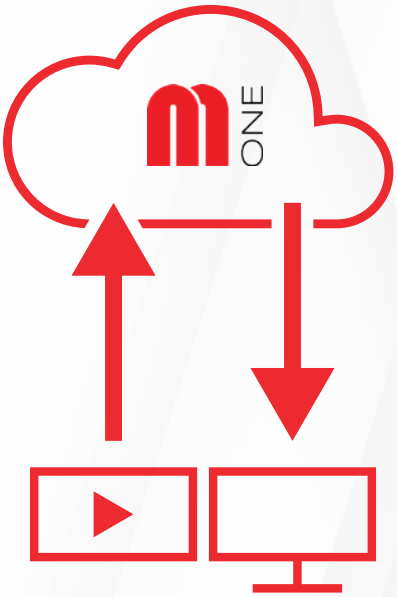



TWO-WAY VIDEO COMMUNICATION

Our two-way video system allows the passenger to communicate with the Concierge/Security staff in the event of an emergency.

The elevator is equipped with a high resolution pin-hole camera. The Concierge/Security desk will have a panel where they can activate the camera and two-way video communication.

Integrable with the Matisse TFT display or Touch-To-Go touchscreen system.

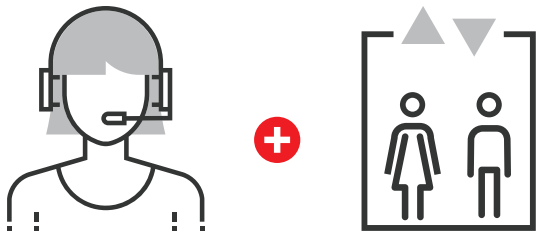

- Fully customizable
- Live video
- High Definition
- Finger touch capability
- Integrable with the TFT Matisse display and Touch-To-Go touchscreen
- Highly recommended for buildings with hearing impaired passengers

CONCIERGE SERVICE

Advanced attendant service functionality. Offered as an additional feature.

Concierge Service gives remote elevator control to the Concierge/Security desk. After the visitor is authorized, the Concierge/Security can dispatch the elevator to the desired floor.

SS#4 COP shown with 10" Matisse PI, BS classic pushbutton, Caesar surface mount non-illuminated tactile, ADA compliant key pad, 21" Touch To Go Touch Screen, 2010 service code with service cabinet.



The Concierge/Security can monitor inside of elevators via live video feeds and dispatch an elevator to the desired floor with advanced attendant service *(additional feature)*

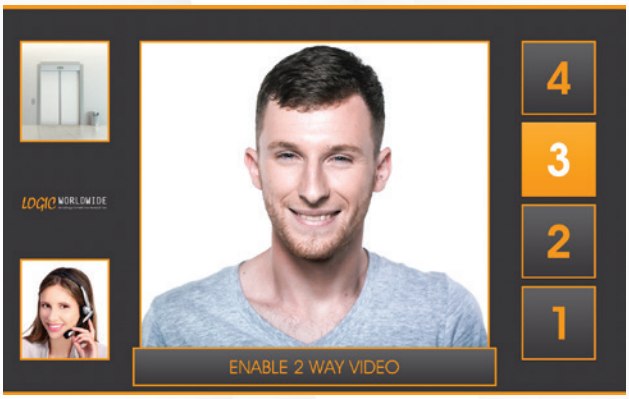

After an emergency call is activated from within the elevator, the live video feed from that elevator automatically enlarges, allowing Concierge/Security to quickly see what is happening in the elevator.





When Concierge/Security activates the two-way video, live video of the Security/Concierge is streamed into the elevator and displayed on either the Touch-To-Go touchscreen or Matisse TFT display.

GERM-FREE SOLUTIONS

PHANTOM - TOUCHLESS SENSOR





The PHANTOM Touchless Sensor allows almost any elevator pushbutton to become touchless. Monitoring the area 0.5" above the pushbuttons, PHANTOM detects finger like objects and activates the button, while rejecting other objects reducing false activations.

To use, the passenger simply brings their finger in proximity of the button to activate the call. Manual button functions remain to meet all code requirements.

- Touch-free – reduce risk of germ transfer
- 11.5"H x 10.5W" touch area
- Works with most elevator pushbuttons
- Easy Installation

TOE-TO-GO

The Toe-To-Go (T2G) foot-activated elevator call button allows activation of hall & car station buttons by shoe, reducing the risk of transferring germs by creating a hands-free experience.





- Hands-Free Activation
- Robust Durable Design
- Stainless Steel or PVD Brass finish
- Easy Retrofit for Existing Installation
- Wire in Parallel to Existing Buttons
- Surface-Mount Option for Hall Station
- Keypad Option for COP

SHERMAN TOUCHLESS



The Sherman Touchless pushbutton is the perfect touch-free solution to the commonly touched elevator surface. Simply hold finger over button for sensor activation. Manual button function remains to meet code requirements.



- Dual Technology: Electromechanical contact (activated by push) and proximity sensor
- Eliminates transferring germs through touched surfaces
- Perfect retrofit product for DMG/MAD buttons
- LED illumination available in white

BS COPPER

The BS Copper pushbutton, fitted with an untreated copper face, is a self-cleaning solution to the commonly touched elevator surface. Buttons can be paired with a large selection of braille tags to combine aesthetics and functionality.









- Naturally Self-Cleaning Button
- Vandal-proof
- Perfect retrofit product: Replace on the Pressel only, contact & wiring unchanged.
- LED Illumination available in Red, Green, Blue & White

PUSH BUTTONS

	BS CLASSIC	BS MOON	BS CALIFORNIA	TOUCHLESS	BP CLASSIC
SAVOY SURFACE MOUNT SQUARE TACTILE					
JULIUS TACTILE AND SURROUND					
CAESAR/DUNE RETRO ILLUMINATION TACTILE					
RITZ PIN MOUNT TACTILE					
ROUND FLUSH	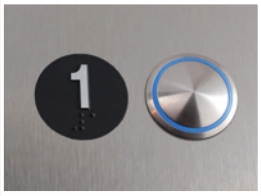		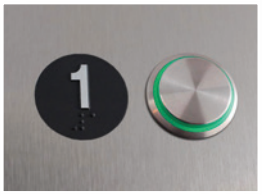		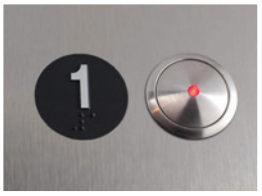
PLAZA SLIMLINE TACTILE	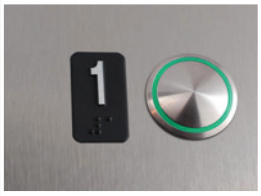				
JULIUS FLUSH					
SQUARE FLUSH					
BAR BUTTON TACTILE AND SURROUND					

Illuminated Bar Button with Amerigo Md BT font Engraved Bar Button with custom font

DUNE	ATOLL	BL BLANK	BL/BD SYMBOL	COLOSSUS
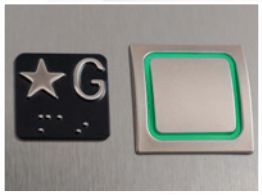				
		NOT RECOMMENDED	NOT RECOMMENDED	NOT AVAILABLE
		NOT RECOMMENDED	NOT RECOMMENDED	NOT AVAILABLE
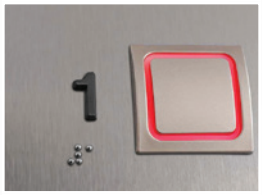		NOT RECOMMENDED	NOT RECOMMENDED	NOT RECOMMENDED
				NOT RECOMMENDED
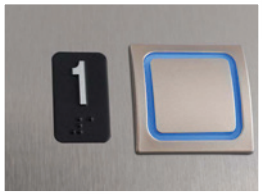				
NOT AVAILABLE				NOT AVAILABLE
				
				

Etched Bar Button with custom font

Blank Bar Button

6635 Ordan Dr,
Mississauga, ON
L5T 1K6
Canada

1 (866) 967-8500
madelevator.com
customerservice@madelevator.com

This publication is for general informational purposes only. Product design is subject to change without notice. Actual product colors, finishes and specifications may vary from graphical representations.

Copyright © 2022 MAD Elevator Inc.

Part of DMG Group of Companies

Ver 5.3

Maxton OVERSPEED VALVE

Introduction

The Maxton OSV line is a uniquely designed, 2 for 1, elevator safety shut off valve designed to protect against elevator car overspeed in the down direction due to pipe rupture and car overload situations. The key combined feature to this valve is a “T” handle shut off pit valve. That means no additional shut of ball valve is required in the pit which reduces cost, time, and number of connections at install.

The OSV STD is used in high flow system applications (300 gpm max,1136 l/min max). Use the Maxton valve calculator for valve sizing to the job specifications. The Maxton OSV STD can be adjusted to stop the elevator in the event of an overspeed condition resulting in an abnormally high rate of flow between the OSV STD valve and the power unit. Can be installed in a horizontal or vertical position. The Maxton OSV STD complies with ASME A17.1/CSA B44 and meets (UFGS Division 14 Conveying Equip Section 14 24 00 Part 2.4.2.2) requiring a valve equipped with manufacturer's manual shut off feature. The use of this valve is required in areas of high level seismic activity IE: California. Check your local codes for compliance.

JACK

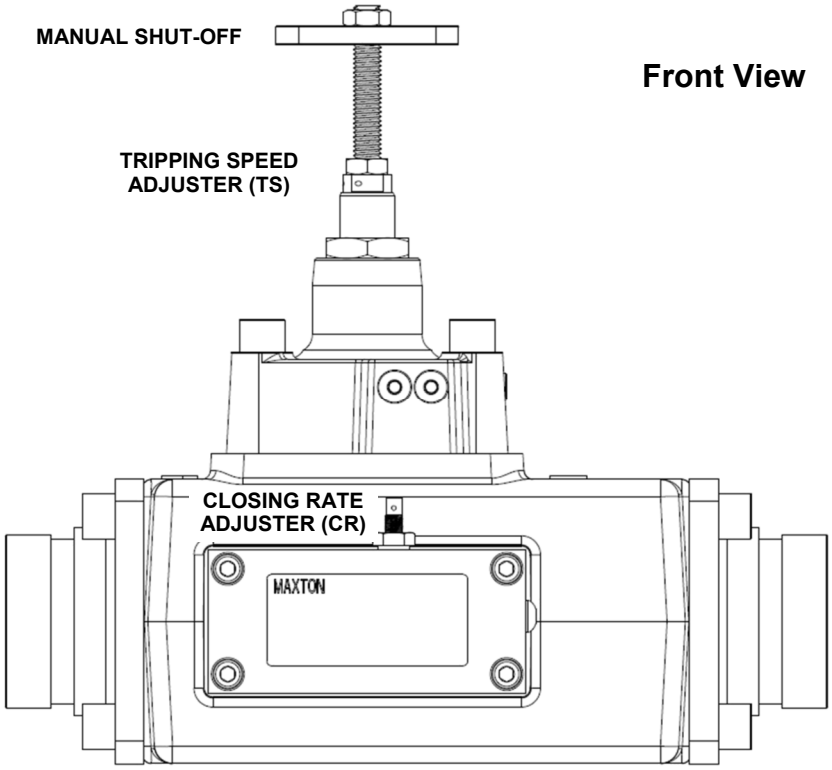

Front View

Specifications

Standard Rated Contract Flow

OSV E1	30 - 100 gpm (114 - 379 l/min)
OSV STD	100 - 300 gpm (379 - 1136 l/min)
Operating Pressure	
Minimum	50 psi (3.4 bar)
Maximum	800 psi (55 bar)
Line Connections	
Jack Port (Flange)	2, 2½” NPT or Grooved
Tank Port (Flange)	2, 2½” NPT or Grooved
Operating Temperature	80°-150° F (26° - 65° C)
Oil Type	Hyd. ISO VG 32 150 SUS @ 100° F (38° C)

Overall Dimensions

Width	11 1/4 inches (286mm)	Height	10 7/32 inches (260mm)
Depth	6 9/16 inches (167mm)	Weight	28 lbs. (12.7kg)

Standard Features

- Works on pressure drop, no electricity is required.
- Incorporates a manual shut off for use as a pit shut off valve.
- Adjustable closing rate.
- Unit body construction.
- Steel sleeve inserts in valve body.
- Grooved or threaded line connections.
- Individualized adjustments.
- Factory tested prior to shipping.
- 2 year limited warranty.

Optional Features

- 3" Grooved flanges

THE INFORMATION CONTAINED HEREIN IS FOR USE BY SKILLED HYDRAULIC ELEVATOR PROFESSIONALS

CAUTION
Never adjust the OSV while the car is in motion. (Stay out of the pit when the car is running.)

Manual shut off (MS) must be fully open (CCW) during normal operation.

When utilizing the OSV as a pit valve, turn Manual Shut Off in (CW) to stop.

Once tripped or after opening the Manual Shut Off, the OSV must be reset to a normal open position by making an up run.

Maxton recommends the OSV have a threaded connection to the jack.

INITIAL SETTINGS			
TS	TRIPPING SPEED	OUT	(CCW) to stop.
CR	CLOSING RATE	OUT	(CCW) to stop.
MS	MANUAL SHUT OFF	OUT	(CCW) to stop.

Top View

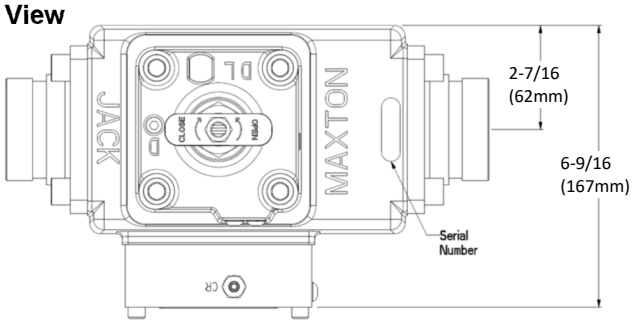

Front View

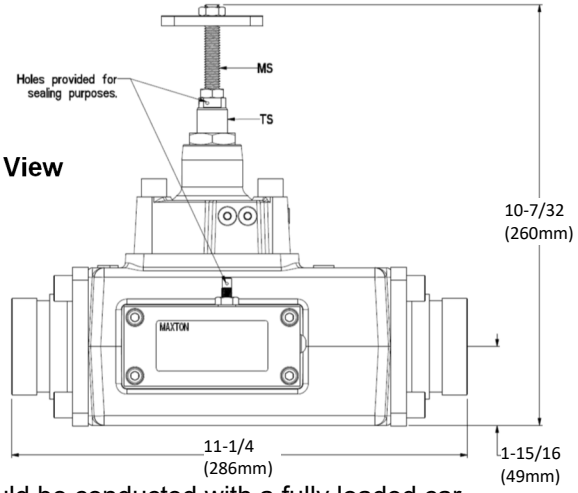

NOTE: To achieve accurate settings, OSV adjustments should be conducted with a fully loaded car. Whenever possible, run car to an intermediate floor during adjustments and tests. **It may be advisable to adjust for a slightly faster down transition to insure floor stop.**

ADJUSTMENT PROCEDURES

1. Set car speed to contract down speed +25% (contract speed = full down speed with rated load).
2. Return car to the upper floor; Verify tripping flow on the PRECALCULATED TRIPPING FLOW TABLE. Turn **TS** in (CW) the number of turns indicated on the TRIPPING SPEED PRESET GRAPH. Exit the pit and register a down call. Minor Adjustment may be needed for final tripping speed. Lock jam nut.

   If piston diameter is unknown, turn **TS** in (CW) one turn. Exit the pit and register a down call. Repeat this procedure until the valve actuates. Lock jam nut.
3. Return the car to the upper floor, turn **CR** in (CW) three turns initially. Exit the pit and register a down call. Repeat this procedure using one-turn increments to obtain a comfortable, firm stop.
4. Seal adjustments **TS** and **CR** as required by local code.
5. Adjust the down valve and down transition back to normal settings (contract speed = full down speed with rated load).

(SEE NOTE ABOVE) **FULL LOAD TEST PROCEDURE**

1. Load car to rated capacity.
2. Increase down speed in accordance with Main Control Valve's manufacturer's instructions until rupture valve sets.
3. Verify rupture valve set within range permitted by local code.
4. Verify adjustments are sealed on rupture valve.
5. Return Main control valve to operational settings.

PRECALCULATED OSV TRIPPING FLOW TABLE

DIRECT ACTING APPLICATIONS

JACK PISTON DIAMETER (INCHES)

LOADED CARSPEED FPM	2	2 1/2	2 3/4	3	3 1/2	4	4 3/8	4 1/2	5	5 7/16	5 1/2	6	6 1/2	7	7 1/2	8	8 1/2	9 1/2	10 5/8	12 5/8
1	0.20	0.33	0.39	0.46	0.63	0.81	0.98	1.04	1.28	1.51	1.54	1.84	2.15	2.50	2.88	3.26	3.69	4.60	5.76	8.13
5	1.03	1.60	1.93	2.30	3.13	4.08	4.88	5.16	6.38	7.54	7.71	9.18	11	13	14	16	19	23	29	41
10	2.04	3.19	3.86	4.59	6.25	8.16	10	10	13	15	15	19	21	25	29	33	36	46	58	81
20	4.08	6.38	7.71	9.18	13	16	20	21	25	30	31	36	43	50	58	65	74	93	115	163
30	6.13	10	12	14	19	25	29	31	39	45	46	55	65	75	86	98	110	138	173	244
40	8.16	13	15	19	25	33	39	41	51	60	61	74	86	100	115	130	148	184	230	325
50	10	16	19	23	31	41	49	51	64	75	78	91	108	125	144	164	184	230	288	406
60	12	19	24	28	38	49	59	63	76	90	93	110	129	150	173	196	221	276	345	488
70	14	23	28	33	44	58	69	73	89	105	108	129	151	175	201	229	258	323	403	569
80	16	25	31	36	50	65	78	83	103	121	124	148	173	200	230	261	295	369	460	650
90	19	29	35	41	56	74	88	93	115	136	139	165	194	225	259	294	331	414	519	731
100	20	33	39	46	63	81	98	104	128	151	154	184	215	250	288	326	369	460	576	813
110	23	35	43	50	69	90	108	114	140	166	170	203	238	275	315	359	405	506	634	894
120	25	39	46	55	75	98	118	124	153	181	185	220	259	300	344	391	443	553	691	975
125	25	40	49	58	78	103	123	129	160	189	193	230	269	313	359	408	460	575	720	1016
130	26	41	50	60	81	106	128	134	166	196	200	239	280	325	373	424	479	599	749	1056
140	29	45	54	64	88	114	136	145	179	211	216	258	301	350	401	458	516	645	806	1138
150	30	48	58	69	94	123	146	155	191	226	231	275	324	375	430	490	553	690	864	1219
160	33	51	61	74	100	130	156	165	204	241	246	294	345	400	459	523	590	736	921	1300
170	35	54	65	78	106	139	166	175	216	256	263	313	366	425	488	555	626	783	979	1383
180	36	58	70	83	113	148	176	186	230	271	278	330	388	450	516	588	664	829	1036	1464
190	39	60	74	88	119	155	185	196	243	286	293	349	410	475	545	620	700	875	1094	1545
200	41	64	78	91	125	164	195	206	255	301	309	368	431	500	574	653	738	920	1151	1626

Tripping Flow (GPM)

NOTICE: DO NOT USE THIS TABLE FOR CALCULATING PUMP OUTPUT.
TABLE REPRESENTS OSV TRIPPING FLOW ONLY. RATED FLOW X 125%

Table Instructions:

1. Intersect loaded down speed with the piston diameter.
2. Intersection = Tripping Flow.
3. Apply tripping flow to the chart on the following page to determine the number turns needed in on the TS adjuster.

TRIPPING SPEED ADJUSTER (TS) PRESETS*

*Adjusted position approximate - Final adjustment may be necessary

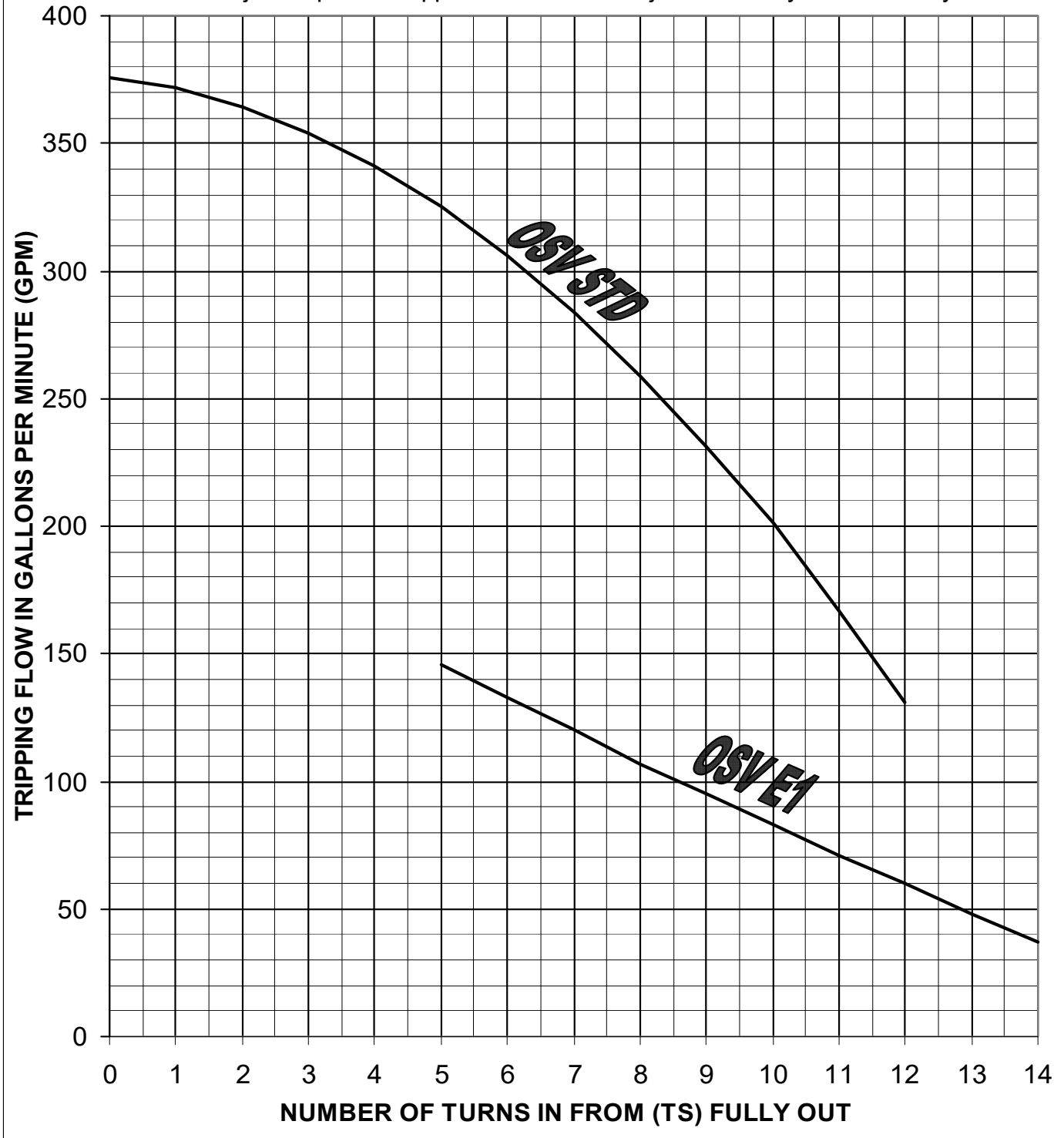

Tripping flow 125% = piston dia. X piston dia. X .051 X Contract Speed (max. down speed with rated load)

THE INFORMATION CONTAINED HEREIN IS FOR USE BY SKILLED HYDRAULIC ELEVATOR PROFESSIONALS

DUAL OSV ADJUSTMENT PROCEDURES

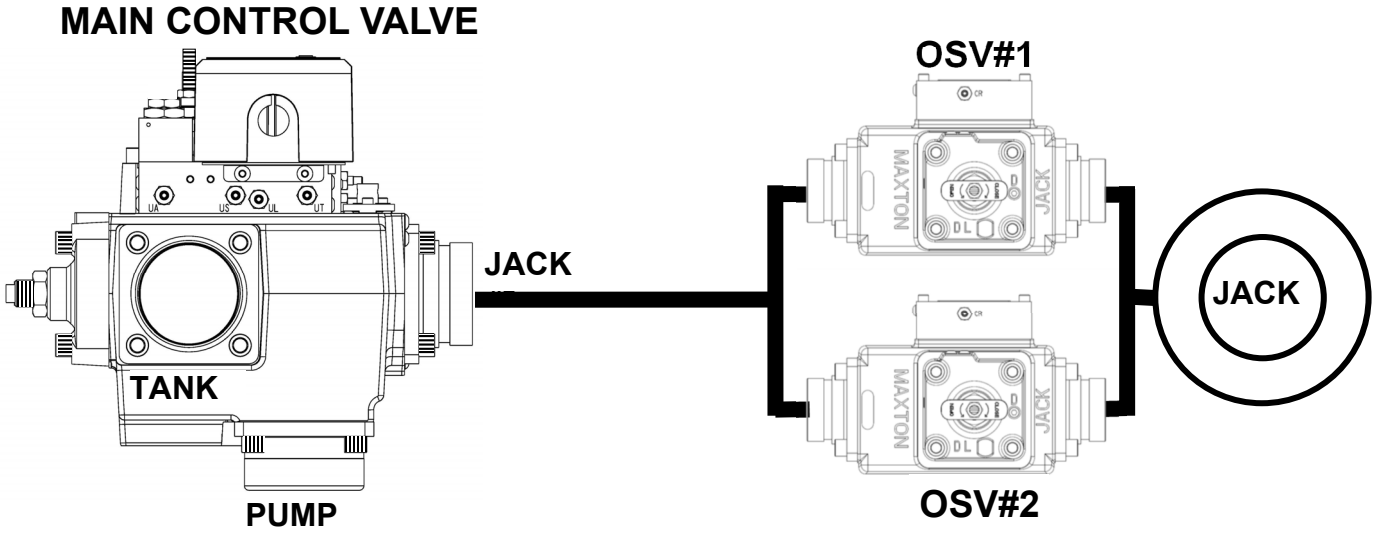

ADJUSTMENT (OSV#1):

IMPORTANT: NOTE THE NUMBER OF TURNS IN ON THE TS AND CR ADJUSTERS.

1. Set car speed by adjusting the down valve (Main control valve) to **HALF** of the desired tripping speed.
2. Return car to the upper floor; Turn MS (Manual Shut Off) adjuster IN (CW) to stop on the OSV#2.
3. OSV#1: Turn TS Adjuster IN (CW) one turn. Exit the pit and register a down call. Repeat this procedure until the valve actuates. **NOTE THE NUMBER OF TURNS IN ON THE TS ADJUSTER**.
4. Return car to the upper floor. Lock TS jam nut. Turn CR IN (CW) three turns. Exit the pit and register a down call. Repeat this procedure using one-turn increments to obtain a comfortable, firm stop. **NOTE THE NUMBER OF TURNS IN ON THE CR ADJUSTER**.

ADJUSTMENT (OSV#2):

5. OSV#2: Turn MS and TS adjusters OUT (CCW) to stop.
6. Turn TS adjuster IN (CW) the same number of turns as TS on OSV#1 from initial setting.
7. Turn CR adjuster IN (CW) the same number of turns as CR on OSV#1 from initial setting.
8. Send car down. OSV#1 should trip. Send car to upper floor.

TESTING OSV's:

9. Increase the car speed by opening the down valve (Main control valve) to verify that tripping speed is within Local Code requirements.
10. Seal **TS** and **CR** adjusters on both OSV's as required by local code.
11. Adjust the main down valve and down transition back to normal settings. (Contract Speed = Full down speed with rated load).

ALTERNATE METHOD (TABLE AND CHART)

Verify tripping flow on the PRECALCULATED TRIPPING FLOW TABLE. Divide TRIPPING FLOW by two (TRIPPING FLOW / 2). Turn **TS** in (CW) on both valves as indicated on the TRIPPING SPEED PRESET GRAPH. Exit the pit and register a down call. Minor adjustment may be needed for final tripping speed. Adjust valves equally.

This page intentionally left blank

Introduction

The Maxton OSVB25 Overspeed Valve (Pipe Rupture) is designed to provide protection against supply line failure or over speed in the down direction. The OSVB25 can be adjusted to stop the elevator in the event of an over speed condition caused by a broken supply line or an abnormally high rate of flow between the OSVB25 and the power unit. The OSVB25 complies with ASME A17.1 / CSA B44.

JACK

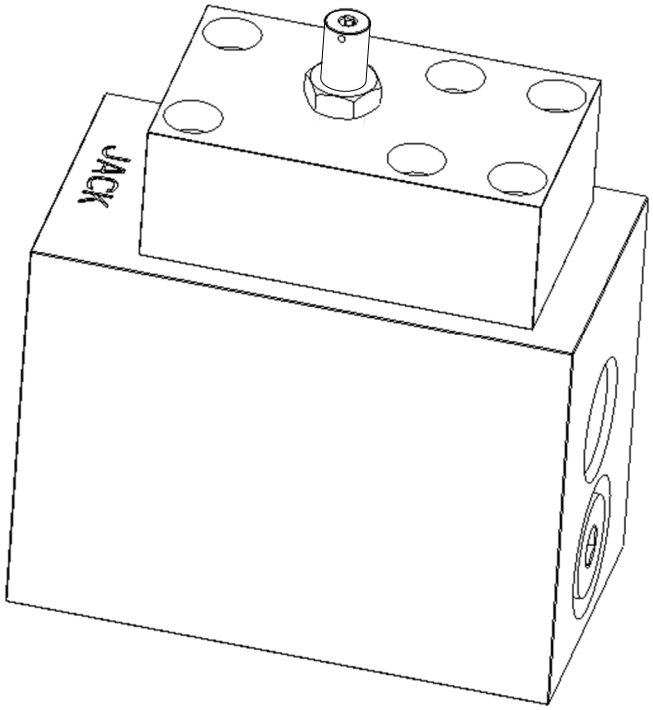

Standard Features

- Works on pressure drop, no electricity is required.
- Unit body construction.
- Factory tested prior to shipping.
- 2 year limited warranty.

Working Flow	3 – 24 gpm (11.4 – 90.8 l/min.) (80% of Tripping Flow)
Operating Pressure	
Minimum	150 psi (10.3 bars)
Maximum	1000 psi (68.9 bars)
Line Connections	¾" NPT Jack & Tank
Oil Type	Hydraulic ISO VG 32 150 SUS @ 100°F (38°C)
Operating Temperature	80° - 150°F (26 - 65°C)
Overall Dimensions	
Width	4-5/8 inches (118 mm)
Height	5-1/2 inches (140 mm)
Depth	2-1/2 inches (63.5 mm)
Weight	4.2 lbs. (1.91 kg.)

THE INFORMATION CONTAINED HEREIN IS FOR USE BY SKILLED HYDRAULIC ELEVATOR

CAUTION
Stay out of the pit when the car is in motion.

Once tripped, the OSVB25 must be reset to a normal open position by making an up run.

INITIAL SETTING:
Turn Tripping Speed Adjuster (TS) OUT (CCW) to stop.

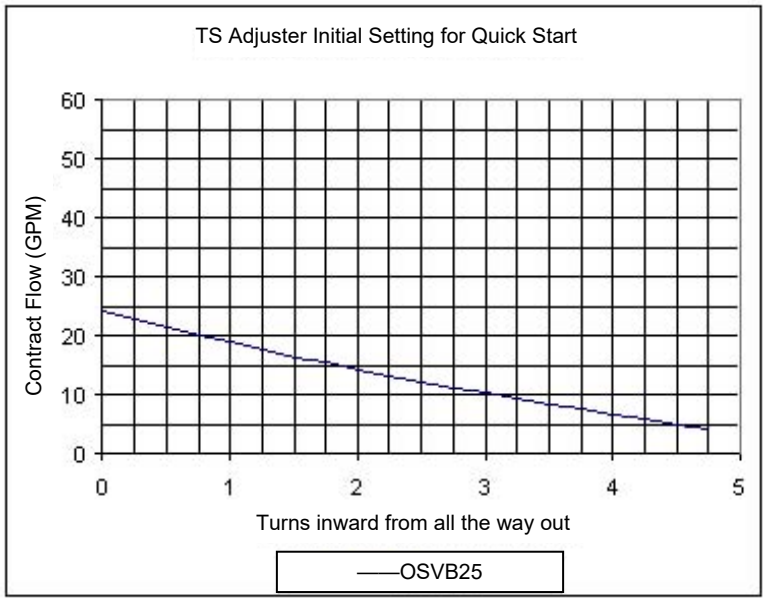

Top View

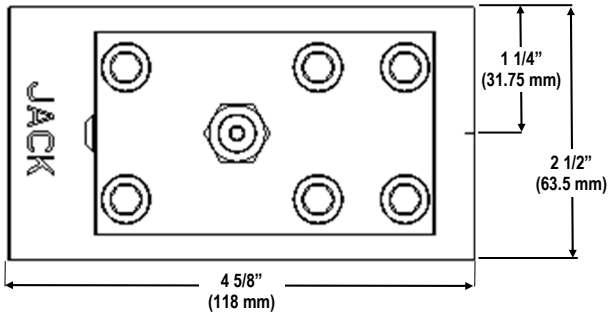

Front View

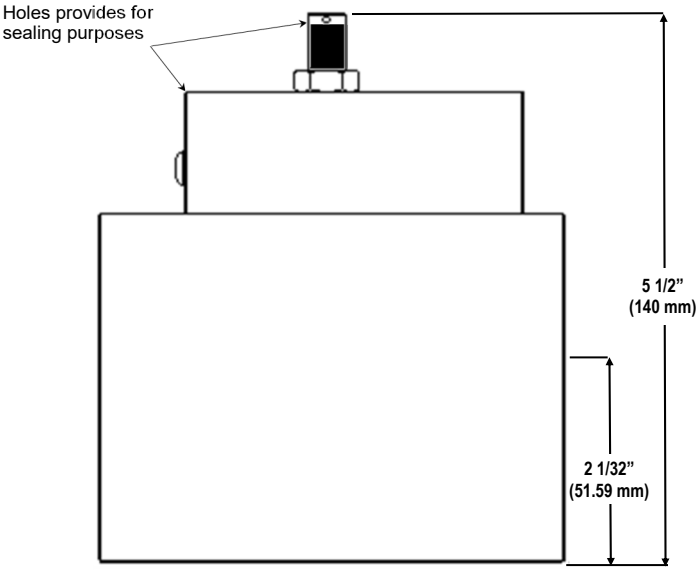

ADJUSTMENT PROCEDURES

NOTE: OSVB25 adjustments should be conducted with a fully loaded car. Whenever possible, run car to an intermediate floor during adjustments and tests. It may be advisable to adjust for a slightly faster down transition to insure floor stop.

1. Set car speed to contract down speed +25% (contract speed = full down speed with rated load).

2. Return car to the upper floor; turn TS in (CW) one quarter turn. Exit the pit and register a down call. Repeat this procedure until the valve actuates. Tighten jam nut to lock setting in place.

3. Apply seal to TS adjuster as required by state and local code.

4. Adjust the down valve back to normal settings.

Pixel-Hydraulic-Instalation-and-adjustment

ELEVATOR CONTROLS
SIMPLE. SOLID. SUPPORTABLE.

Pixel Control System

Installation & Adjustment

For Hydraulic Elevator Applications

Utilizing Mechanical or Solid-State Starter Motor Control

Product Documentation that's Simple to Navigate™

This is the Installation and Adjustment Manual that is the guide for installation, startup and final adjustment of all Pixel Hydraulic Series elevator controllers. Other resources include:

- **Solid State Starter Motor Control Specific Manuals**
- **Maintenance & Troubleshooting Training Manual** provided in conjunction with Factory and Customer Site technical training classes
- **Telephone Technical Support** available for Customers at no charge
  - **call**: 916/428-1708
  - **e-mail**: techsupport@elevatorcontrols.com
  - **fax**: 916/428-1728
- **Onsite Product & Engineering Support** available worldwide by prior arrangement.

All information contained herein is confidential and proprietary to Elevator Controls Corporation. This document shall not be used or reproduced, in whole or part, without the prior written consent of Elevator Controls.

Pub ID: Pixel Hydraulic Installation and Adjustment
Rev 10-02-23

© 2013 Elevator Controls Corporation

Table of Contents

Introduction **CONVENTIONS IN THIS MANUAL**

Warning, Caution, and Note Icons vii

System Menu Navigation ix

Section 1 **PIXEL OVERVIEW**

1.1 **System Description, Capabilities and Advantages** 1

1.2 **System Components** 2

1.2.1 Typical System Components 3

1.2.2 Pixel Hydraulic Series Capabilities 5

1.3 **About Pixel** 6

1.3.1 Typical Pixel Controller Layout 6

1.3.2 Typical Pixel TOC Top of Car Interface 7

1.4 **New Technology, New Terms** 7

1.4.1 Pixel Dashboard – Overview 7

1.4.2 Pixel Dashboard – Screen and Navigation 9

1.4.3 Pixel Screen – Home/Startup Display 10

1.4.4 Quick Reference Color Status 11

1.4.4.1.1 Visual Door Status 11

1.4.4.1.2 Mnemonic Color Code Status 11

1.4.4.2 Modes of Operation 12

1.4.4.3 Intended Direction 12

1.4.4.4 Current and Destination Floors 13

1.4.4.5 Speed 13

1.4.4.6 Control System Configuration 13

1.4.4.7 Active Fault 13

1.5 **Pixel New Features Quick Overview** 13

1.5.1 Landa Dual Positioning System 13

1.5.2 Virtual Safety Limits 14

1.5.3 CAN-bus Network 14

1.5.4 Parallel Independent Safety Processors 14

1.5.5 Integrated I/O Testing and Remapping 15

1.5.6 Consolidated Field Wiring 15

1.5.7 Remote Assist 15

1.6 **Pixel Menu System Overview** 15

1.6.1 Home/Startup Menu – Top Tier 16

1.6.2 Install Menu – Second Tier 16

1.6.3 Adjust Menu – Second Tier 17

1.6.4 Troubleshoot Menu – Second Tier 17

Section 2 **YOUR INSTALLATION PLAN**

2.1	General Information	18
2.2	Installation Considerations	18
2.3	Environmental Considerations	19
2.4	Recommended Tools, Test Equipment & Manuals	19
2.5	Controller Wiring Guidelines	20
Section 3	**INSTALL THE CONTROL SYSTEM**	
3.1	Pixel Hydraulic Control System Steps to Startup	22
3.2	Install the Controller Cabinet	22
3.3	Wire the Control System	22
3.3.1	Test Ground Continuity	22
3.3.2	Remove Primary Controller Fuses	22
3.3.3	Place Disconnect Switch in Off Position	23
3.3.4	Wire Main Line to Controller	23
3.3.5	Verify Supply Voltages at Equipment	23
3.3.6	Pixel Dashboard Interface – Indicators	24
3.3.7	Verify Motor Data Tag Information	26
3.3.8	Intentionally left blank	26
3.3.9	Intentionally left blank	26
3.3.10	Intentionally left blank	26
3.3.11	Enable Construction Mode of Operation	26
3.3.12	Wire Circuits Required for Construction Mode	27
3.3.13	Intentionally left blank	27
3.3.14	Verify Motor Rotation	27
3.3.14.1	Pump Motor Rotation (Wye Delta or Delta Starter Only)	27
3.3.14.2	Reverse Phase Relay (Wye Delta or Delta Starter Only)	27
3.3.15	Review Instructions (Solid State Starter Only)	28
3.3.15.1	Proper Pump Motor Rotation (Solid State Starter Only)	28
3.4	Run the Car on Construction Mode	28
3.4.1	Attempt to Move Car	29
3.4.2	Wye Delta Timeout Adjustment	29
3.4.3	Up To Speed Solid State Starter Adjustment	30
3.4.4	Valves Adjustment	30
3.4.5	System Startup Complete	30
3.5	System Components Installation and Wiring	30
3.5.1	TOC Box Installation	30
3.5.2	COP Installation Wiring	31
3.5.3	Traveler Cable Installation and Wiring	31
3.5.4	Landa Positioning System Installation	31
3.5.4.1	Encoded Tape	31
3.5.4.2	Landa Dual Sensor Head Installation and Wiring	32

3.5.4.3	Landa Positioning System Verification	32
3.5.5	Cab and Hoistway Wiring	33
3.5.5.1	Mechanical Switches and Peripherals Wiring	33
3.5.5.2	Hall Network	33
3.5.5.2.1	Pixel RJ45 Hall Wiring Option	33
3.5.6	Verify Network Set Up	34
3.5.6.1	MP Cab Node Network Setup Verification	34
3.5.6.2	Hall Node Network Setup Verification	34
3.5.7	Verify Network Communications	35
3.5.7.1	Car Network Landscape	35
3.5.7.2	Pixel Car Nodes Switchgear Configuration	35
3.5.7.3	Car Hall Network Landscape	36
3.5.7.4	System Hall Network Landscape	36
3.5.7.5	Unknown Node Landscape	36
3.6	Verify Hoistway Clearance	37
3.7	Verify Connectors Properly Seated	37
3.8	Hoistway Position Learn	38
3.8.1	Floor Setup	38
3.8.1.1	Bottom Landing Setup	38
3.8.1.2	All Other Landings Setup	39
3.8.2	Adjust Up and Down Limit Positions	41
3.8.3	Learn Hoistway Access Virtual Limits	42
3.9	Transfer of Hoistway Layout	44
3.10	Disable Construction Mode of Operation	44
Section 4	**FINAL ADJUSTMENT**	
4.1	Door Adjustment	45
4.1.1	MOVFE CAN-bus Door Operator Adjustment	45
4.2	Check Hoistway Clearances	45
4.3	Use of Test Switch	46
4.4	Get car Ready to Run in Test Mode	47
4.5	Reset Non-Test Modes	47
4.6	Entering Calls to Run in Test Mode	48
4.7	Speed Performance Parameters Description	49
4.7.1	Contract Speed	49
4.7.2	Slowdown Dist. per 50 FPM	49
4.7.3	STD Offset Adjustment	50
4.7.4	SLDN End Marker	50
4.7.5	Level Zone	50
4.7.6	Dead Zone	51
4.7.7	Leveling Adjustment	51

4.7.8	Highspeed Trip Speed	51
4.7.9	Inspection Trip Speed	52
4.7.10	Leveling Trip Speed	52
4.7.11	Up ETS % Trip Speed	53
4.7.12	Down ETS % Trip Speed	53
4.7.13	Down ETS Warning Count	54
4.7.14	High Speed on Inspection	54
4.7.15	Releveling Up Offset	55
4.8	Verify Speed Parameters	51
4.8.1	Verify Short Floor Distance	55
4.8.2	Verify Speed Parameters	57
4.9	Run Car to Every landing	58
4.9.1	Slowdown Distance per 50FPM Adjustment	58
4.9.2	STD Offset Adjustment	58
4.10	Pump Motor Soft Stop	58
4.11	Adjust Leveling Adjustment	59
4.12	Adjust Releveling Offset	59
4.13	Adjust Floor Levels	60
4.14	Adjust STU an STD Virtual Magnets	61
4.15	ETS Learn	62
4.16	Transfer Safety Configuration File	63
4.17	Up and Down ETS % Trip Speed Adjustment	63
4.18	Verify Overall Car Performance	64
Section 5	**SPEED MONITORING ADJUSTMENT**	
5.1	Car Speed Monitoring System	66
5.1.1	Defining Overspeed	66
5.1.2	Monitoring Overspeed	67
5.1.3	Speed Monitoring Adjustment	67
Section 6	**CODE COMPLIANCE VERIFICATION**	
6.1	Performing Elevator Safety Tests & Inspections	69
6.2 & 6.3	Intentionally Left Blank	69
6.4	Safety Speed Tests	69
6.4.1	Car Buffer Test – Fully Loaded Car	69
6.4.2 & 6.4.3	Intentionally Left Blank	70
6.4.4	Terminal Stopping Devices (A17.1 Section 3.25)	70
6.4.4.1	Terminal Speed-Reducing Devices	71
6.4.4.2	Normal Terminal Stopping Devices	72
6.5	Overspeed Tests	73
6.5.1	Inspection Overspeed	73

6.5.2	Leveling Overspeed	74
6.5.3	Intentionally Left Blank	75
6.5.4	Contract Overspeed	75
6.6	Valve High Pressure Relief (The Stop Ring Test)	76
6.7	Down Overspeed	77
6.8	Landa Redundant Position System Verification	78
6.9	Monitoring Compliance Verification	80
6.9.1	EB1-EBS and EBX1-EBX2 Relays Contacts	80
6.9.2	AA Motor Contactor Force Guided Relay	81
6.9.3	P Potential Force Guided Relay	81
6.9.4	BK Relay	82
6.9.5	Hoistway & Car Door Bypass Switches	83
6.9.6	Detection of Jumpers on Door Safety String (DLM)	85
6.9.7	Door Open and Close Simultaneously	86
6.9.8	Valves Latched Direction	87
6.9.8.1	U Relay Contact 1	87
6.9.8.2	D Relay Contact 1	88
6.9.9	Single Ground	89
6.9.10	Permit Car Speeds Over 150 fpm	89
6.9.11	Governor Test	90
Section 7	**TROUBLESHOOTING**	
7.1	General Troubleshooting Tips	91
7.2	General Checklist	91
7.3	Fault Help Menu Navigation Example	92
7.3.1	Troubleshooting Example	92
7.4	Pixel Fault Listing Table	94
Section 8	**Section intentionally left blank**	**141**
Section 9	**MAINTENANCE**	
9.1	Maintenance	142
9.2	Replacement Parts List	142
9.2.1	Elevator Controls PC Boards	142
9.2.2	Relays	142
9.2.3	Fuses	143
9.2.4	Modules	143
9.2.5	Semiconductors	143
Appendix D	Mnemonic Description Translation Tables	144
Appendix E	**CEDES APS Positioning System**	
E	CEDES APS Positioning System	148
E1	Install CEDES APS Positioning System	149
E2	CEDES APS Positioning System Verification	156

Introduction

Conventions in this Manual

Warning, Caution, and Note Icons

Throughout this manual, icons call attention to text that issues safety warnings, cautions, and/or notes to which particular attention should be paid.

WARNING: Operating procedures or practices that may result in personal injury and/or equipment damage if not followed correctly.

CAUTION: Operating procedures and practices that may result in equipment damage if not correctly followed.

NOTE: Useful information or procedures.

All instructions in this manual assume that work will be done by qualified field personnel, trained and experienced in the installation of elevator equipment. No attempt has been made to define terms or procedures that should be familiar to qualified elevator personnel.

CAUTION: Equipment installation must comply with all Local and other applicable Elevator and Electrical Codes and regulations.

NOTE: It is assumed that all switches serving as stop and overtravel limits – at both terminal landings – have been verified to be of the proper type, correctly placed and operating as intended.

This manual is intended only to acquaint elevator personnel with the information required to successfully install the Pixel elevator control system. Installation personnel must be familiar with all

codes and regulations pertaining to safe installation and operation of the elevator systems.

WARNING: THE AC POWER SUPPLIED to this equipment must be provided through a PROPERLY FUSED DISCONNECT OR CIRCUIT BREAKER. Improper circuit protection may create a HAZARDOUS CONDITION.

CAUTION: Restrict access to elevator control equipment and apparatus to qualified personnel only.

NOTE: Installation and wiring must be in accordance with the National Electrical Code and consistent with all local codes, as well as National elevator codes and regulations.

NOTE: Connection of field wiring to controller terminals must be accomplished in a neat and careful manner. Stranded wire conductors must be twisted together to avoid any strands that, if left out of terminals, would create potential shorts. All controller connections, field terminals, and cable connectors must be checked to be sure they are tight and properly seated. When connecting flat cable connectors, take care to match pin #1 marks (arrow symbol on connector, red stripe on cable) to prevent damage.

Conventions in this Manual

System Menu Navigation

The Pixel system has a very powerful and flexible set of menus.

To view and access selections, a high-resolution color LCD screen has been paired with an intuitive Touch & Go™ selection knob. Simply rotate to scroll up and down any selection list. Then press to select the desired function (or setting) and keep right on working.

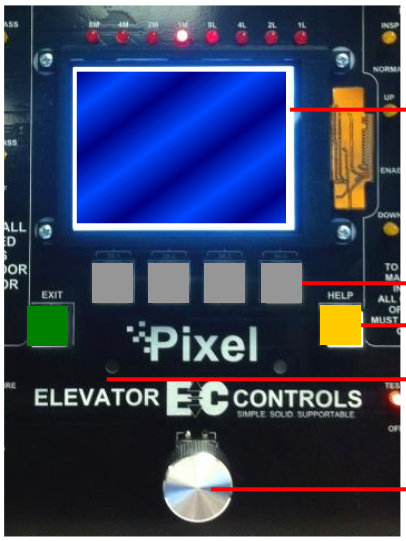

DASHBOARD

- **High Resolution LCD Screen**
- **Direct-Select Keys**
- **Help Key**
- **Home Key**
- **Touch & Go™ Navigation**

Figure i1 – System Access Point

Above the silver Touch & Go knob – within easy reach – are six key. The GREEN key is Home, the YELLOW key is Help, and the four GREY keys between have menu-specific functions.

GREY keys are Direct-Select keys, for which function labels appear just above the keys at the bottom of the LED screen, based on the specific menu being viewed.

Throughout this manual, visual shorthand is used to describe how to quickly locate and interact with various menus and options.

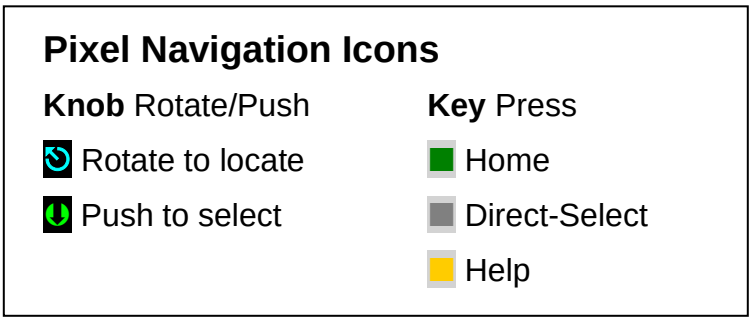

Figure i2 – Pixel Visual Shorthand Navigation Icons

Narrative Navigation Instructions too Complicated
This manual might instruct you to press the Green HOME key, then use the Touch & Go knob to navigate to INSTALL. Once this selection is highlighted, select it by pressing the Touch & Go knob. Then use the knob again, to navigate to ABOUT. Press to select.

Visual Shorthand: Simplified version of the instructions above.

Home

Install

About

Another Example: Modify Fire Return Floor

Home

Adjust

Select Car Performance

Fire Return Floor

Select New Value

Save or Cancel

Section 1 – Pixel Overview

1.1 System Description, Capabilities & Advantages

The Pixel Hydraulic Control System uses advanced technology to enable more routine tasks to be accomplished faster.

Everything about Pixel has been designed to save field labor time. This digital elevator control system provides three points of system access – Machine Room, Cartop, and Inside the Cab – so the most convenient location can be used to complete tasks quickly and easily.

Each of the three system access points includes a vivid color LCD display, unique Touch & Go™ interface, one-button access to context-responsive help, and intuitive direct-select keys. Instant real-time awareness of current car operation is provided on all displays when not otherwise in use.

The Landa™ car positioning system provides absolute cab position information with high tech accuracy – using dual sensor heads to track cab position to 0.8 millimeter. Landa components are mounted quickly – all limits, slowdowns and landings are defined virtually, stored digitally, and easily readjusted. No need to install or wire vanes or switches in the hoistway (except top physical limit switch as required by elevator safety code).

Powerful yet simplified diagnostics are built into each system access point, including the ability to intuitively view and easily reprogram elevator "personality" parameters onsite. Review and adjust parameters, access fault diagnostics and playback the operating sequence leading to a fault notification.

The integrated Pixel control system package typically includes the car controller, cartop box with access point, COP access point, Landa positioning system, and hall nodes that communicate using EC's enhanced **c-LINK**™ CAN-bus serial communication system. **c-LINK** reduces wire count for hall, car and cartop signals without compromising EC's Safe & Sensible™ standards.

Dual CAN-bus controller area networks provide high speed internal system communication. Use of this industrial standard communication protocol opens the door to interoperability with a variety of current and future products and peripherals – including the latest door operators.

Overall reliability is enhanced by surface-mount electronic components, large scale integrated circuits, and state-of-the-art PC boards.

When the power of technology is used to simplify essential tasks – including installation, adjustment, maintenance and troubleshooting – everybody wins.

1.2 System Components

The Pixel system design is based on a dual high-speed CAN-bus controller area network communications architecture, which supports group operation for up to twelve cars. The most basic component – a car control system – is made up of the following:

a **Pixel** Car controller

b **P-TOC** Pixel top of the car interface controller

c **P-COP** Pixel car operation panel interface controller (one per COP; up to four per car supported)

d **P-HALL** Pixel hall nodes (as required for hall calls, fire recall, gongs, etc.)

e **Landa™** dual sensor car positioning system

1.2.1 Typical System Components

The Pixel control system – depending on the specific application – typically includes:

a **Pixel Car Controller**
The Pixel car controller is usually located in a machine room or – in machine-room-less applications, in an equipment closet. Various enclosures are available to fit your specific application and meet your NEMA rating requirements.

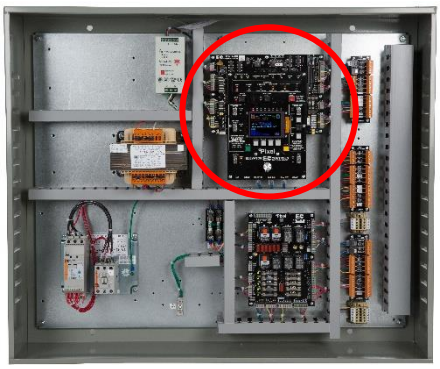

b **P-TOC Pixel Cartop Interface**
The cartop system access point provides access to configuration information, parameters and diagnostics. The cartop interface box provides a convenient wiring termination for Landa, door operator, load weigher, safety edge, cab light and fan, traveler cable and the provided TOC-to-COP wire harness. Optional (similar to photo) cartop inspection station with light and service outlet is available.



c **P-COP Pixel Car Operating Panel Interface**
A system access point is located at each COP. EC-Ready COP Fixtures fully interconnect to the TOC box using the provided TOC-to-COP harness. One wiring harness is provided for each of up to four COP's per cab.



d **P-HALL Pixel Hall Nodes**
Universal hall nodes can provide connections for hall calls, fire recall, access, hall gongs, code blue calls and more.

Each CAN-driven node supports two I/O easily configurable using onboard switchgear.



e **Landa™ Dual Positioning System**
Landa is a dual positioning system that provides absolute cab location information without the need for vanes or switches in the hoistway. *

Dual communication channels, one for each positioning system, provide truly independent redundancy for failsafe operation.

Landa provides precision accuracy – tracking cab location to within 0.8 millimeter.



* Top physical limit switch
Must be provided as required by elevator safety code

1.2.2 Pixel Hydraulic Series Capabilities

Speed	**300 fpm** | 1.5 mps
Stops	**128 Stops maximum** with selective door operation
Group Size	**12 cars maximum**
Environment	**32 to 104 degrees Fahrenheit** | 0C to 40C degrees **Altitude to 12,000 feet** | 3,658 meters 95% relative humidity (non-condensing)
Motor Control	**Solid State Starter** **Y-Delta Mechanical Starter** **Across the line, Delta, Mechanical Starter**
Positioning	**Landa™ absolute car positioning** system using dual sensor heads and coated tape to track position accuracy to 0.032” (0.8mm)

1.3 About Pixel

1.3.1 Typical Pixel Hydraulic Controller Layout

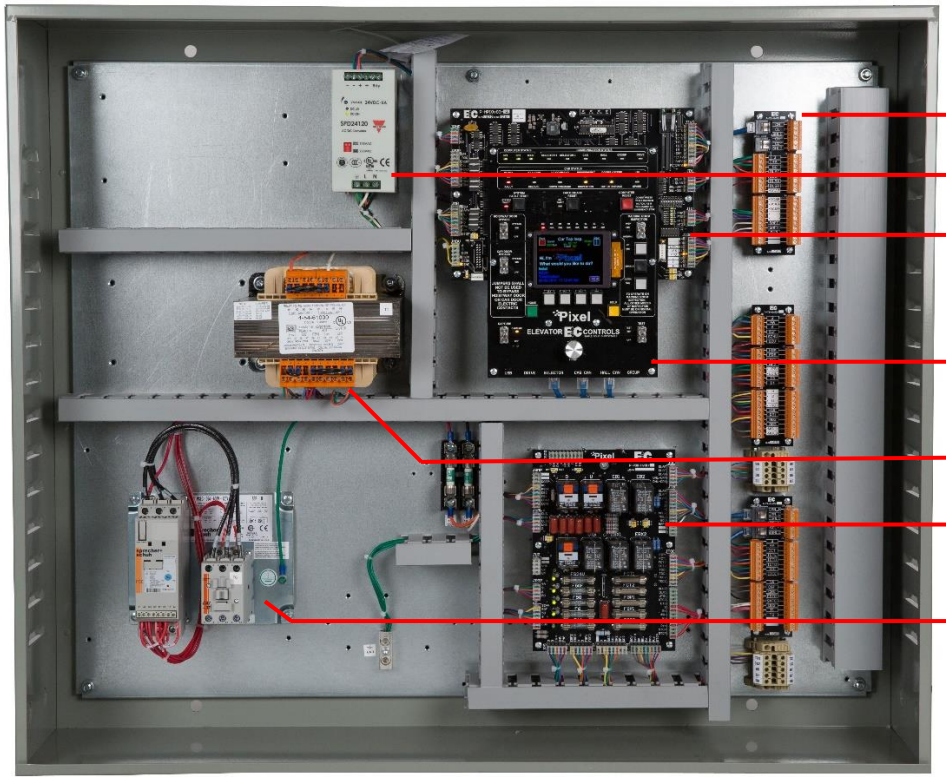

PC BOARDS & COMPONENTS

- **Field wiring Terminals**
- **24 VDC Power Supply**
- **P-MP-IO Microprocessor** Main Input/ Output Safety Microprocessor
- **P-MP Pixel Microprocessor Board** with onboard diagnostics
- **Power Transformer**
- **P-PDB Power Distribution Board**
- **Pump Motor Contactor**

Figure 1.3.1 – Typical Pixel Hydraulic Car Controller

1.3.2 Typical Pixel TOC Top of Car Interface

The Pixel TOC Top of Car Interface is provided with all mounting hardware required to fasten it to the crosshead rail on the cartop.



COMPONENTS & SWITCHGEAR

- **Traveler termination, COP interconnection, Cab Lights and Fans Terminals**
- **P-TOC Aux System Access Point** Screen and Dashboard
- **Optional Cartop Inspection Switchgear and Light**
- **24 VDC Power Supply**
- **P-TOC Cartop Microprocessor Board**

Figure 1.3.2 – Typical Pixel Cartop Interface

NOTE: The P-TOC Top-of-Car Interface can optionally include a cartop inspection station, with light and service outlet, as an option (like picture Figure 1.3.2 above).

1.4 New Technology, New Terms

Our goal was to design the Pixel system using advanced technology to simplify routine tasks – so you can accomplish more, faster.

Lots of traditional tasks are done with Pixel using a new, time saving approach. Here's a quick tour of key system components. We've developed some new terms to make your transition to Pixel easy.

1.4.1 Pixel Dashboard – Overview

Complete tasks more easily and quickly by working from the most convenient location.

Pixel concentrates switchgear, indicators, readouts and a vivid color LCD display into an intuitive dashboard. The primary system access point is the controller in the machine room.

Two convenient additional system access point locations are provided – on the cartop, and inside the car operating panel. These provide access for checking system status, viewing and resetting most system parameters, and powerful diagnostics for troubleshooting.

DASHBOARD

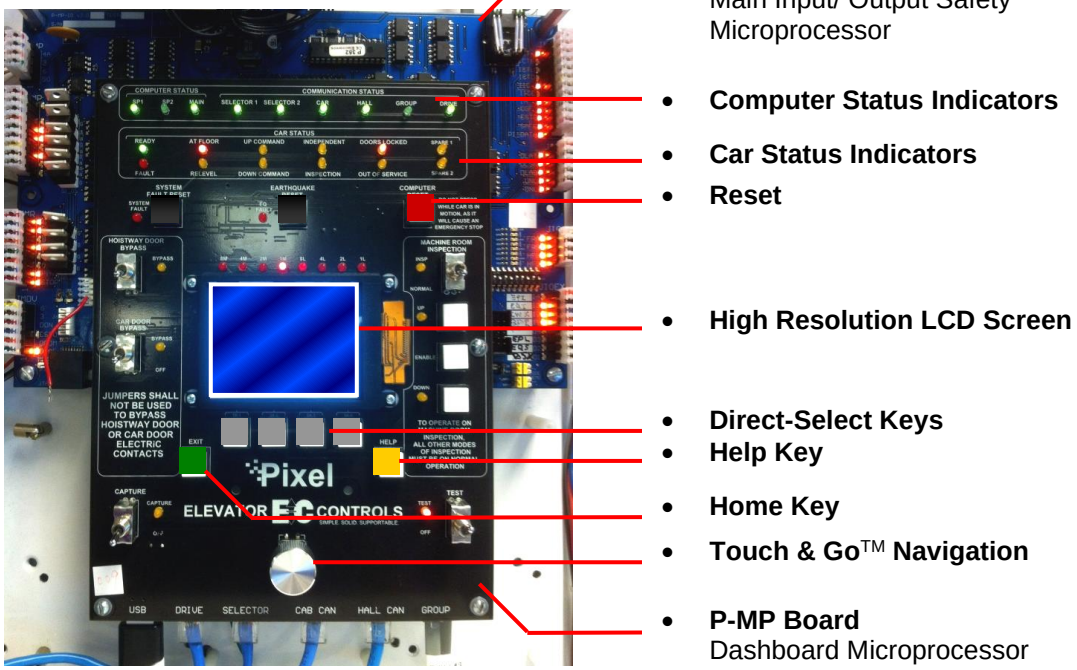

- **P-MP-IO Microprocessor**
  Main Input/ Output Safety Microprocessor
- **Computer Status Indicators**
- **Car Status Indicators**
- **Reset**
- **High Resolution LCD Screen**
- **Direct-Select Keys**
- **Help Key**
- **Home Key**
- **Touch & Go™ Navigation**
- **P-MP Board**
  Dashboard Microprocessor

Figure 1.4.1 - Pixel Dashboard Overview

Pixel displays information on a vivid, full color LCD screen at each system access point. Instant real-time awareness of current car operation is provided on all system screens, when not otherwise in use.

The majority of functions and parameters can be viewed and changed from any of the three system access point locations (there are just a few exceptions to meet safety requirements).

Each System Access Point provides:

- Elevator “personality” parameters that are easily viewed and intuitively reprogrammed
- Simplified access to review and adjustment of parameters
- Learn landing zones and readjust position virtually by entering offsets in inches or millimeters
- View of faults and access to diagnostics
- Powerful, easy to use system diagnostic tools

1.4.2 Pixel Dashboard – Screen and Navigation

Pixel uses a simple knob for navigation and selection – called 'Touch and Go™' – everything you need is at your fingertips.

Pixel's high-resolution color LCD screen is paired with a simple, intuitive selection knob called the Touch & Go™ interface. Rotate to scroll up and down any selection list. Then – press this same knob – to select the desired function (or setting) and keep right on working.

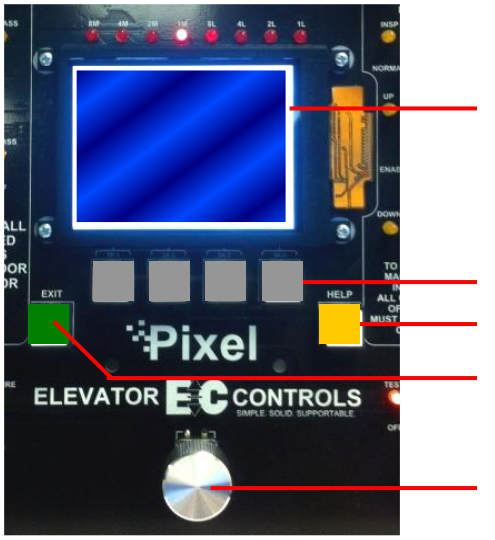

SCREEN & NAVIGATION

- **High Resolution LCD Screen**
- **Direct-Select Keys**
- **Help Key**
- **Home Key**
- **Touch & Go™ Navigation**

Figure 1.4.2 – Pixel Screen & Navigation

The dashboard provides a dedicated YELLOW button for immediate access to context-responsive help if needed.

Depending on the menu or parameter display being viewed, flexible GREY direct-select keys are assigned helpful functions.

Return to the main menu at any time by pressing the GREEN home key.

1.4.3 Pixel Screen – Home/Startup Display

Pixel's screens continuously display information – understood 'at a glance' – from multiple system access points.



Figure 1.4.3a - Pixel Home Screen Display

The top third of the home screen displays useful system information – whether seen in the machine room, on the cartop, or in the cab.

This view appears on system startup ***Figure 1.4.3a***. The icons and text information are each identified below for reference ***Figure 1.4.3b*** and described in detail on the following pages.

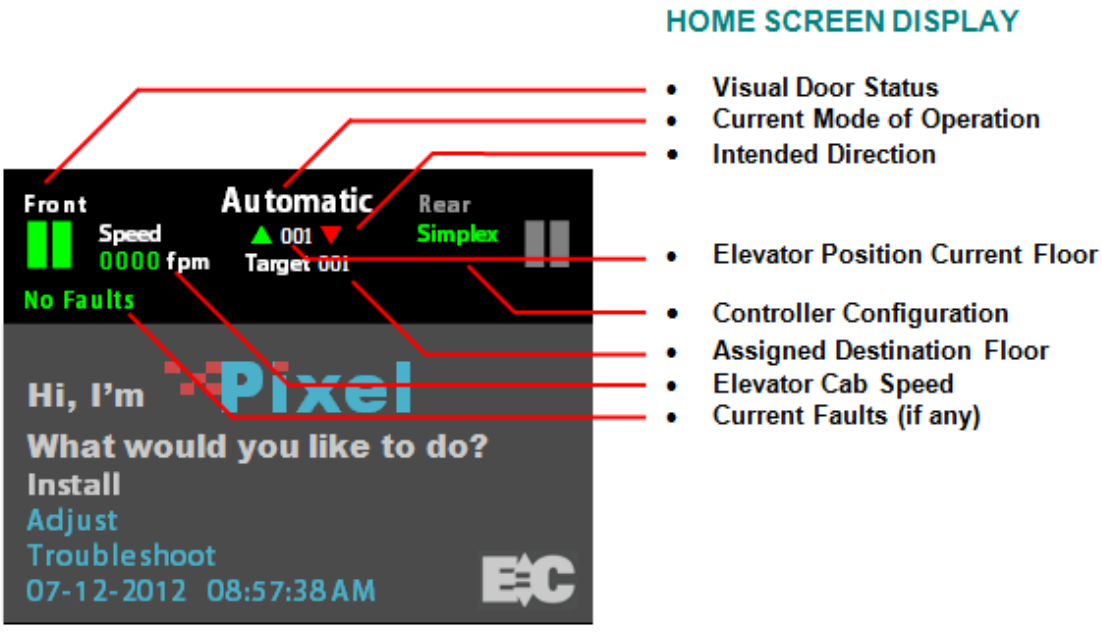

Figure 1.4.3b - Pixel Home Screen Display

1.4.4 Quick Reference Color Status

1.4.4.1.1 Visual Door Status

Available door openings are displayed as active (in green) or inactive (in grey) using center parting door icons. Visual door status is indicated as follows:

- Opened — Small portion of door on each side of opening
- Closed — Solid green door panels indicated
- Opening — Animation: doors moving partly to fully open
- Closing — Animation: doors moving partly to fully closed
- Faulted — Solid red door panels indicated

1.4.4.1.2 Mnemonic Color Code Status

Each Mnemonic represents an input, output, or an internal process status; Refer to Appendix D, Mnemonic Description Translation Tables, for a listing of the most relevant mnemonics. Pixel implements a color scheme background to differentiate the mnemonic status for each of the safety processor SP1, SP2 and the elevator microprocessor MP as shown on Figure 1.4.4.1.2 – Pixel Screen Flag Status, GOV= SP1 active, SP2 and MP inactive, SAFC= SP1 and MP inactive, SP2 active, SAFH= SP1, SP2 and MP active, and RG= SP1, SP2 and MP inactive to march color key below:

- Black — SP1, SP2 and MP inactive
- Blue — SP1, SP2 and MP active
- Yellow — SP1 active, SP2 and MP inactive
- Green — SP1 and MP inactive, SP2 active

NOTE: Full color scheme above applies to safety input or output mnemonics; for MP input-outputs or internal process mnemonics only Black and Blue colors apply representing the MP status.



Figure 1.4.4.1.2 – Pixel Screen Flag Status

1.4.4.2 Modes of Operation

Construction mode, when enabled, restricts operation to inspection mode with limited speed and no positioning.

Pixel supports multiple modes of operation including:

Automatic

- Main Fire Recall
- Alternate Fire Recall
- Fire Phase 2
- Emergency Power Phase 1

Inspection

- Cartop Inspection
- In Car Inspection
- Hoistway Access
- Machine Room Ins.

Construction

- Cartop Inspection
- Machine Room Ins.

- Emergency Power Phase 2
- Emergency Power Pre-transfer
- Battery Rescue Operation (traction)
- Battery Lowering Operation
- Fire Service
- EMT Phase 1
- EMT Phase 2
- Hospital Service
- Earthquake Normal Mode (Traction)
- Earthquake Abnormal Mode (Traction)
- Test
- Capture
- Independent
- Wild / Sabbath
- Security
- Out of Service Recall
- Car to Lobby
- Flooded Pit Recall
- Piston Synchronization
- Viscosity Operation
- Car Overloaded
- Attendant Service

1.4.4.3 Intended Direction

When car direction is determined, the Pixel screen will display a solid up Green or down Red directional arrow. If direction has not been assigned, both arrows appear in outline.

1.4.4.4 Current and Destination Floors

The Pixel screen displays the current floor at all times, found between the up and down directional arrows, indicated in three digits.

If a destination floor has been assigned, it will be displayed just below the current floor, labeled Target, indicated in three digits. The Target is dynamic and may change during a run.

1.4.4.5 Speed

The Pixel screen displays cab speed, just to the right of the Front door icon. Scale can be toggled between fpm (feet per minute) and mps (meters per second).

1.4.4.6 Control System Configuration

The Pixel screen displays system configuration, just to the left of the Rear Door icon. Car configuration can be Simplex or Group. In group configuration, the current priority to assume dispatching functions for the group is indicated, under the word 'Group'.

1.4.4.7 Active Fault

The Pixel screen displays the active fault with the highest priority or **No Faults** if none present.

NOTE: Faults are classified as either latching or non-latching. While non-latching faults self-reset, all faults are recorded in fault counters and logs.

1.5 Pixel New Features Quick Overview

1.5.1 Landa™ Dual Positioning System

No more time consuming and costly hoistway work mounting vanes, wiring and readjusting switches.

Landa is a dual positioning system that provides absolute cab location information. Dual communication channels, one for each positioning system, provide truly independent redundancy for failsafe operation.

Landa provides precision accuracy – tracking cab location to within 0.8 millimeter. All limits, slowdowns and landings are defined virtually, stored digitally, and easily readjusted. No wiring, vanes or switches are required in the hoistway (*except top physical limit switch as required by elevator safety code).

1.5.2 Virtual Safety Limits

Pixel knows where the car is always .

The Landa car positioning system captures high resolution position data that is maintained through power cycling. During the hoistway 'learn' procedure, the control system generates and records the location and associated position for all required virtual safety limits.

Once learned, virtual safety limits function in the same way that vane and switch systems worked in the past. Safety code requires placement of top physical limit switch, for which Pixel provides inputs (described in the wiring Section).

1.5.3 CAN-bus Network

Proven industrial standard communication protocol provides simplified interoperability using high speed dual CAN-bus networks.

The Pixel controller uses dual CAN-bus controller area networks to provide high speed internal system communication, including group to and between individual car controllers. Use of this industrial standard protocol opens the door to interoperability with a variety of current and future products and peripherals.

1.5.4 Parallel Independent Safety Processors

If at any time, Pixel's two independent safety systems do not agree, an automatic system shutdown is executed to keep passengers safe.

In compliance with current elevator safety code, Pixel's design incorporates parallel independent safety processors. Two independent, redundant means are used to monitor safe operation. The logic output from both safety systems is continually compared.

EC design engineers devised **SP1**, a powerful software-based safety processor, which is continually crosschecked by **SP2**, a hardware-based FPGA (Field Programmable Gate Array) safety processor.

1.5.5 Integrated I/O Testing and Remapping

Local diagnostics function whether the access point has an active connection to the system network.

Pixel has designed-in reliability and flexibility. Simple onboard I/O testing is supported at each system access point. Every I/O is provided with an associated LED indicator.
If an I/O is found to have failed, remap I/O can be used to reassign this I/O to another location on the same PC board, or to another I/O board, using an intuitive, visually-based process.

1.5.6 Consolidated Field Wiring

Consolidated field wiring saves time while separating low and high voltage signals to help prevent component damaging wiring errors.

The Pixel controller cabinet has been designed so you can bring field wiring into a functional assigned color coded terminal strips – a convenience we call consolidated field wiring.

1.5.7 Remote Assist™

Virtual tech support is delivered to your machine room on demand – with system access you always approve and control.

Elevator mechanics have long wished that support technicians could join them in the machine room with a simple call for help. Remote Assist enables the Pixel technical support team to virtually view the system you are working on, in real time, and provide guidance and recommendations.

1.6 Pixel Menu System Overview

Menu content is strategically organized, and logically sequenced, with related tasks grouped together.

The broad range of selections within the Pixel system are presented in menus, each containing a reasonable number of selections within each tier. The number of tiers has also been minimized to simplify navigation and selection.

The breadth and depth of the Pixel menu system provides access to the extensive parameters demanded by the most experienced adjuster. But many installers will find that the top two or three menu tiers will satisfy the majority of their needs.

1.6.1 Home/Startup Menu – Top Tier

The Pixel home menu displays on startup – or whenever the green ■ Home key is pressed.

This screen displays a greeting message, “Hi, I’m Pixel. What would you like to do?” along with the following Menu options:

- **Install**
- **Adjust**
- **Troubleshoot**
- **Date/Time display/reset**

Start by selecting one of three basic tasks – Install, Adjust, or Troubleshoot – by using the Touch & Go™ knob to scroll through selection options. When your desired selection is highlighted, press the knob to select.

Note that system date/time settings and preferences are accessed from the Home screen as well.

1.6.2 Install Menu – Second Tier

The Install menu presents a range of options which are roughly organized in the most likely sequence in which tasks will be completed:

- **About**
- **Initial Settings**
- **View Selector Data**
- **Learn Functions**
- **Code Compliance Test**
- **Construction Mode**
- **File Transfer**
- **I/O Mapping**
- **Contact**

Again, the Touch & Go™ knob is used to scroll through selection options. When your desired selection is highlighted, press the knob to select.

Each of these options, and their submenus, are presented in detail in **Section 3 – Install the Control System**.

1.6.3 Adjust Menu – Second Tier

The Adjust menu presents a range of options for optimizing ride, car and group dispatching performance:

- **About**
- **Car Performance**
- **Ride Performance**
- **Group Performance**
- **Contact**

The Touch & Go™ knob is used to scroll through selection options. When your desired selection is highlighted, press the knob to select.

Each of these options, and their submenus, are presented in detail in **Section 4 – Final Adjustment**.

1.6.4 Troubleshoot Menu – Second Tier

The Troubleshoot menu presents a range of tools designed to simplify and expedite system troubleshooting if required:

- **About**
- **Single Call Enter**
- **Auto Car Call Simulation**
- **View Selector Data**
- Serial Brake(s)
- Drive
- **Controller Network**
- **Flags**
- **Event Logs**
- **Sequence Log**
- **Statistics Counters**
- **View Selector Data**
- **View Current Events**
- **Local Diagnostics**
- **Contact**

The Touch & Go™ knob is used to scroll through selection options. When your desired selection is highlighted, press the knob to select.

Section 2 – Your Installation Plan

2.1 General Information

This section contains important instructions and recommendations to ensure successful Pixel Control System installation.

Successful installation and reliable, trouble free operation of all elevator control equipment depends on proper assessment of the installation environment and proper wiring methods. Completing both correctly protects equipment from disruption by external sources.

2.2 Installation Considerations

When selecting the best physical location for the control equipment consider the following:

a. Make sure the control system is placed logically, while taking into consideration all elevator system components and non-elevator equipment sharing the space.

b. Use four 3/8" in diameter, Grade 5 bolts and four 3" x 3" x 3/16" carbon steel plated washers in the designated enclosure mounting holes to secure controller.

c. Provide adequate working space for control system installation, wiring, and maintenance. Elevator Controls standard equipment enclosures require front access only. This eliminates many constraints that would otherwise limit how equipment can be located.

d. Do not install equipment where it may create a hazard.

WARNING: Install Pixel Control equipment according to all applicable electrical, fire, and building codes. Improper installation and/or equipment location may create a HAZARDOUS CONDITION.

e. Do not install control system components in areas or on surfaces where there is exposure to vibration that may be produced by other equipment. Modern control systems contain socket-mounted parts whose function may be compromised by vibration.

f. Provide adequate lighting for safety and efficiency.

g. An internet connection, with fixed IP address, is desirable for access to **Remote Assist™** from the EC factory technical support team.

h. If wireless service at the installation location is poor or intermittent, have a wired phone installed in the machine room.

2.3 Environmental Considerations

The elevator control system should be installed according to the following requirements to ensure proper operation and longevity:

a. Temperature inside the control system enclosure should be maintained between 32- and 104-degrees Fahrenheit (0 to 40 degrees Celsius). Temperatures outside this range may affect normal operation and/or reduce system life. If required, make provisions for machine room air conditioning. EC can quote and provide an enclosure-mounted air conditioning unit.

b. Air in the machine room should be free of corrosive gases and sufficiently dry to prevent condensation from moisture. NEMA 4 or NEMA 12 enclosures, with integral air conditioning units, are recommended for applications that do not meet these requirements. EC can quote and provide the full range of specialized NEMA rated enclosures for proper and safe operation in non-standard environments.

c. Locate control system enclosures and components away from any window or opening to minimize the risk of equipment damage due to severe weather conditions.

d. Protect control system equipment from exposure to extreme levels of electromagnetic (EM) and radio frequency (RF) radiation. EC control systems are certified to current EMI/RFI standards though independent testing by CKC Laboratories, Inc. However, note that EMI and RFI have the potential to interfere with normal operation of any electronic system.

NOTE: Hand-held communications devices used close to the system microprocessors have been known to generate disruptive RF interference.

2.4 Recommended Tools, Test Equipment & Manuals

The following tools are recommended for installation:

a. Digital multi-meter

b. Assorted tools used for electronics work such as pliers, cutters, flashlight, EC small straight blade screwdriver (supplied with each controller), etc.

c. Amprobe or similar probe equipped ammeter

d. Telephone

e. Test weights

f. Control system “as built” job wiring prints

g. This installation and adjustment manual

h. Solid State Starter Motor Control Manual, if applicable

i. Oscilloscope and meter that measures meg-ohms may be desirable for advanced troubleshooting (rarely required)

2.5 Controller Wiring Guidelines

CAUTION: Restrict access to elevator control equipment and apparatus to qualified personnel only.

NOTE: It is very important to follow control system wiring guidelines to prevent problems with EMI/RFI interference and feeder line pollution.

NOTE: Wiring to controller terminals must be done neatly and carefully. Stranded wire conductors must be twisted together, avoiding stray strands that could create short circuits if not contained in terminals.

NOTE: All terminals and cable connectors should be checked to ensure that they are properly and solidly seated. When connecting flat cable connectors, be certain to match pin #1 marks (arrow symbol on connectors; red stripe on cable) to prevent mechanical damage to connectors and electrical damage to system components.

There are four wiring entry points provided in order to maintain proper separation between wiring for various purposes to ensure proper system operation:

a. **Power Wiring**: The line power feeders and ground coming from the elevator service disconnect.

b. **Motor Wiring**: Power wiring to pump motor.

c. **Safety and Logic Wiring**: All wiring to fixtures and switches, as well as signal cross-connect cables from one car to another in a multi-car group system.

d. **Communications Cable**: Communication cables run from one controller to another in a group of two or more cars.

NOTE: The standard EC NEMA 1 enclosure is provided with factory knockouts for recommended ideal field wiring entry points.

Knockouts and intended use are listed:

a. Top right side

- **Communication cable**

b. Middle right side
   - **Safety & Logic wiring**

c. Lower left and right side
   - **Main Line Power wiring**
   - **Pump Motor wiring**

WARNING: **METAL SHAVINGS AND/OR WIRE CLIPPINGS can cause immediate and delayed DAMAGE to circuits – in any part of the system – if they bridge or short any circuit or connection. They can also COMPROMISE SAFE AND PROPER SYSTEM OPERATION if they become positioned in a way that modifies a circuit or circuits.**

CAUTION: Ensure that metallic shavings and/or wire clippings are minimized and prevented from remaining in any enclosure interior. Thoroughly check for and remove residue before applying power. Methods used to capture and remove metal fragments should not be allowed to create static buildup or discharge.

Good Practice: Soft clean paint brush (gently sweep particles on enclosure bottom into pile and remove); masking tape (use to remove particles; create adhesive pocket under intended hole locations with tape to catch shavings when drilling).

Risky Practice: Use of small vacuum (potential ESD electrostatic discharge damage); compressed air (may drive particles into inaccessible or undetectable locations, potential for eye injury).

NOTE: Alternate wiring entry points may be created in the field to accommodate specific installation conditions.

NOTE: Study your control system layout to develop the best arrangement for keeping the five entry points separated and laid out logically to suit your particular application.

Section 3 – Install the Control System

3.1 Pixel Hydraulic Control System Steps to Startup

Protect printed circuit boards from dust and foreign materials. Remove main fuses. Complete elevator controller mounting, installation, and wiring.

Observe controller field terminal locations in relation to wiring ducts to determine optimum locations for wiring to enter the control equipment enclosure.

Complete the steps in **Sections 3.2 through 3.4.5 below** in order to run the car on Construction mode.

CAUTION: Use care to protect circuit boards from metal debris when cutting.

NOTE: The standard Pixel Hydraulic controller enclosure has several ¾" knockouts marked for wiring ducts which can be used as guides for location of knockouts required for each particular job.

3.2 Install the Controller Cabinet

In Section 2 you reviewed the general considerations for machine room layout and develop your installation plan. Now, proceed to locate and mount the controller enclosure.

3.3 Wire the Control System

3.3.1 Test Ground Continuity

Test all terminals for continuity to ground. If continuity is found, resolve the problem before proceeding.

NOTE: Terminal 3 is connected to ground and used as system common.

3.3.2 Remove Primary Controller Fuses

Remove fuses FL1, FL2, FCT1, FCT2, F4A in order to remove power to controller logic, and the door operator. Place **Machine Room Inspection** to **INSP** and the **Test** switch to **TEST**. Both switches are located on the P-MP board.

NOTE: Always review job prints to confirm correct fuse designations and amperages, as well as to become familiar with job specific circuit requirements.

3.3.3 Place Disconnect Switch in Off Position

Place the disconnect switch in the off position and check voltage on the line side to verify that all three legs are correct based on job prints page 1.

WARNING: CONFIRM THAT FEEDER LINE VOLTAGE is within 10% of specified control voltage or PERMANENT DAMAGE could occur to both the motor and elevator control system logic. TURN OFF THE MAIN DISCONNECT and CORRECT any voltage problem BEFORE PROCEEDING with installation.

CAUTION: Remove any protective covering that may still be in place on PC boards and components before applying power.

3.3.4 Wire Main Line to Controller

Wire the main line from the disconnect switch to the motor starter or terminal block provided in the controller enclosure as indicated on job prints page 1.

NOTE: Use proper wire size for amperage.

NOTE: Ground wire size must provide equal or greater ampacity than the incoming feeders.

3.3.5 Verify Supply Voltages at Equipment

Turn on the disconnect switch to verify that voltages at controller terminals are correct based on job prints page 1.

Turn off the disconnect switch then replace the fuses removed previously in Section 3.3.2 above.

Turn on the disconnect switch and confirm that computer power supply input and output voltages are correct based on job prints page 2. Verify that buss voltages are 24 volts DC for terminals 6, 50, 50F, and S24V; and 120 VAC for terminal 4A.

Confirm that the P-MP color display is on and the screen shows the Pixel home/startup display, “Hi, I’m Pixel. What would you like to do?”

NOTE: After verifying input voltages and fuses as required per job prints, if you are unable to correct conditions to confirm voltages and behaviors described, call Elevator Controls technical support at **916-428-1708**.

3.3.6 Pixel Dashboard Interface – Indicators

You will find multiple LED indicators have been provided on PC boards, and onboard computer diagnostics are included. Both are very useful tools that will save installation and troubleshooting time.

NOTE: Review the Pixel system dashboard indicators and switchgear before continuing to the Section 3.3.7.

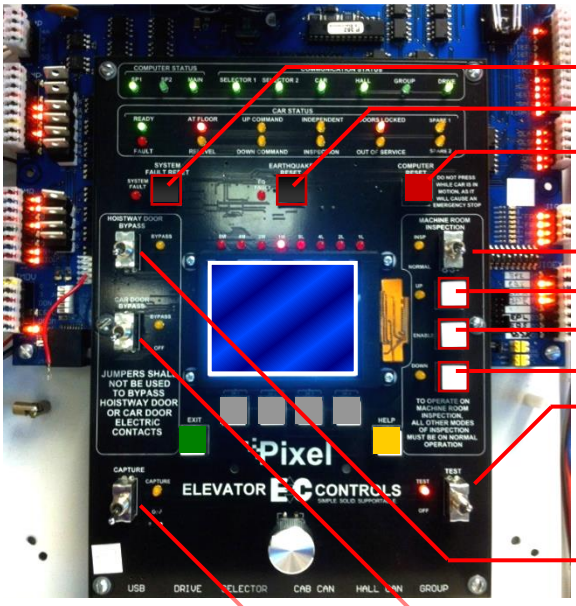

Figure 3.3.6a - Pixel

SWITCHGEAR

- System Fault Reset
- Earthquake Reset
- Computer Reset

MACHINE ROOM INSPECTION

- Inspection Switch
- Up Button
- Enable Button
- Down Button
- Test Switch

DOOR BYPASS PANEL

- Hoistway Door Bypass
- Car Door Bypass
- Capture Switch

INDICATORS

- Computer Status
- Communication Status
- Car Status Indicators
- I/O Indicators
- High Resolution LCD Display

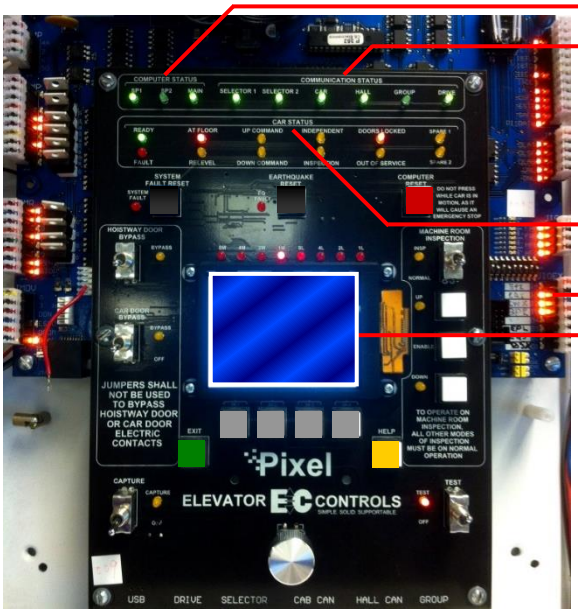

Figure 3.3.6b - Pixel Dashboard

3.3.7 Verify Motor Data Tag Information

This step confirms that the data provided to manufacture the control system agrees with actual nameplate data for the motor.

Compare motor nameplate data to that found on the job prints page 1.

WARNING: DO NOT CONTINUE if any DATA discrepancy is found.

NOTE: If any data does **NOT** agree with job prints, call Elevator Controls Technical Support at 916-428-1708. Be prepared with your job number, nameplate data, and job print data.

3.3.8 Section purposely left blank

3.3.9 Section purposely left blank

3.3.10 Section purposely left blank

3.3.11 Enable Construction Mode of Operation

The steps described starting in this section will allow you to operate the car in Construction mode when you reach the end of Section 3.4.5. Construction Mode allows the car to be operated on Cartop inspection without Landa™ selector feedback – while maintaining elevator safeties consistent with this inspection mode.

Construction mode is enabled or disabled by using the Touch & Go™ knob to navigate:

- Home
- Install
- Construction Mode
- **Enable** or Cancel

Pixel Navigation Icons

Knob Rotate/Push	**Key** Press
Rotate to locate	Home
Push to select	Direct-Select
	Help

NOTE: Construction Mode must be set to Disable in order to Enable any automatic mode of operation.

3.3.12 Wire Circuits Required for Construction Mode

Construction Mode allows the car to be operated on Car Top or Machine Room Inspection modes. All safety circuits required for these modes of operation must be operational:

a. Set HOISTWAY DOOR BYPASS and CAR DOOR BYPASS SWITCHES to BYPASS position; OR ensure that all car and hoistway gates and locks are closed.
b. Wire Motor to Motor Contactor; refer to page 1 of prints for guidance.
c. Governor switch contact wired between Terminals 4A and GOV or Jumper terminal 4A to GOV if no governor device is required.
d. Wire Car-Top Station Pendant unit, refer to page QR1 of the prints:
    1. Switch between 4A and ICT
    2. Enable Push Button between 4A and ICTE
    3. Up Push Button between 4A and ICTU
    4. Down Push Button between 4A and ICTD
    5. Stop Push Button between 4A and SAFH and SAFC

NOTE: Use proper wire size for amperage and use ground wire size equal or greater ampacity than the motor power wires.

3.3.13 Section purposely left blank

3.3.14 Verify Motor rotation

NOTE: Section 3.3.14 is for Wye-Delta or Delta Motor Starter. Skip to Section 3.3.15 if using Solid State Starter.

3.3.14.1 Pump Motor Rotation (Wye Delta or Delta Starter only)

Verify proper rotation of the pump motor by momentarily closing starter contacts (use the Y Contactor for Y-Delta starters) and BK redundant motor contactor if required by job, refer to page 1 of prints. Do not hold for more than one second). If rotation is incorrect, interchange two of the leads at disconnect, or the top of the starter **(power lines only, not motor leads).**

3.3.14.2 Reverse Phase Relay (Wye Delta or Delta Starter only)

Observe the RP (Reverse Phase) relay. If it is picked, proceed to the next step. If RP is not picked, check fuses FL1, FL2, and FL3 and make sure that, if an adjustable sensor is provided, the setting is correct.

If this does not cause the RP relay to pick, turn off the power and reverse two of the three wires (probably #14 or #18 gauge) that feed 3-phase AC power from the starter to the rest of the controller (these wires will typically be at the top of the starter). Restore power. The RP relay should pick. If not, replace the RP plug-in sensor or the RP relay and repeat this step.

NOTE: Section 3.3.15 is for Solid State Motor Starter. (Skip to Section 3.3.14 above if using Wye-Delta or Delta Starter).

3.3.15 Review Instructions (Solid State Starter only)

Read the manufacturer's solid-state starter unit (SSSU) application instructions and use for reference through this section. The ready light should come on when power is applied to the input side of the SSSU. If there is a phase loss the phase reverse indicator will come on. Verify that the line-to-line voltage is the proper value. If incorrect, swap any two power input lines to the starter. This should correct the problem and the ready LED indicator should come on. Refer to SSSU manufacturer's manual for advanced troubleshooting.

3.3.15.1 Proper Pump Motor Rotation (Solid State Starter only)

Verify proper rotation of the pump motor by momentarily jumpering the enable contacts (Motor Run Input) on the SSSU, refer to page 4 of prints to jump terminals connected while AA auxiliary contact 1 is closed. If motor rotation is reversed, correct by swapping two of the motor winding connections (refer to the SSSU manufacturer manual for directions to properly swap two of the motor winding connections).

3.4 Run the Car on Construction Mode

NOTE: Pixel will prevent the car from moving until the required Construction Mode signal status is achieved.

NOTE: Construction Mode allows the car to run On Car Top or In Car Inspection in low speed only regardless of High Speed on INS parameter setting.

Navigate to the home screen, then follow step-by-step instructions.

- Home

Confirm that the Pixel screen displays, "No Faults."

If a fault condition is indicated

- Help

Read the fault description and follow instructions for resolving the issue
Once recommended actions are completed press the

■ System Fault Reset

This will clear a “fault latched” state.

NOTE: The highest priority fault is displayed on the Pixel home screen (No Faults is the default). Lower priority faults may be revealed once the first fault is resolved. Repeat instructions above until No Fault are displayed.

NOTE: Faults are classified as either latching or non-latching. While non-latching faults self-reset, all faults are recorded in fault counters and logs.

3.4.1 Attempt to Move Car

Using the Car-Top Station Pendant unit confirm the car can be commanded to move in the up or down direction, verify respective up or down valve unit is energized matching commanded direction of travel, refer to page 1 of prints for valve coils wiring interface.

3.4.2 Wye Delta Timeout Adjustment

NOTE: Section 3.4.2 applies to Wye-Delta mechanical starter units only, skip to 3.4.3 if Solid State Starter unit is being used.

For WYE-DELTA starters, the proper transition time from Wye to Delta should be verified and adjusted for smooth pump motor acceleration and up to speed transition, the Wye Delta Timeout is found navigating to:

■ Home

Adjust

Car Performance

Timers

Hydraulic Timers

Wye Delta Timeout

3.4.3 Up to Speed Solid State Starter Adjustment

NOTE: Section 3.4.3 applies to Solid State Starters units only for Wye-Delta mechanical starter skip to 3.4.2 above.
For Solid State Starter Unit or Variable Voltage Variable Frequency starter is provided, refer to the manufacturer's manual for acceleration and up-to- speed motor control adjustment.

3.4.4 Valves Adjustment

Refer to the valves manufacturer's manual to adjust car Inspection speed, low speed up and downs valves, to allow for car use to finalize elevator installation.

NOTE: Low speed valves may need to be adjusted during final adjustment to achieve performance and comfortable landing approach.

3.4.5 System Startup Complete

At this point the system startup is complete: the elevator car should run correctly on Construction mode in Car Top Inspection or Controller Inspection modes.

If you are unable to run the car, review the steps in Section 3 to section 3.4.4 above, and repeat as required.

Elevator system hardware installation should be completed next, including installation of the Cartop box, Car Operating Panel, Landa™ dual head positioning system etc. in order to enable the car to transition from Construction Mode to Inspection and Automatic modes of operation.

3.5 System Components Installation and Wiring

3.5. 1 TOC Box Installation

The Pixel TOC box is supplied with necessary hardware to permanently attach it to the crosshead using Unistrut and clamps.

Survey the cartop and determine the best quadrant for mounting, setup and ease of wiring to door operator(s), load weighing devices, Landa™ positioning hardware, fans and cab accessories to the TOC box. Refer to job prints page TOC1 for instructions and details of TOC mechanical installation.

Install the TOC box provided. If your TOC box includes the optional pre-wired Car Top Inspection Station, install the TOC box the light bulb and light bulb mesh protection provided. Install the Emergency Stop push button switch.

NOTE: Pixel's pre-wired Car Top Inspection Station light bulb, light bulb mesh protection, and the Emergency Stop push button switch are shipped inside the TOC box.

Once the TOC box has been installed, if you did not order the pre-wired Car Top Inspection Station, wire the job Inspection Station provided by others to the TOC Box, referring to page CW of the prints for wiring instructions.

3.5.2 COP Installation Wiring

Refer to your COP panel provider and cab manufacturer for any special installation instructions for the pre-wired COP panel. Use the harness provided to connect to the TOC box. Refer to job prints page CW for harness wiring details.

NOTE: A color-coded harness is provided to simplify connection of the COP(s) to the TOC. One harness is shipped with the TOC box for each COP.

NOTE: Place the switch for Independent Service to on and leave it on to make sure car will open doors while transferring from TEST to Independent service as indicated in Section 4, final adjustment below, and to enable access to inside of the cab.

3.5.3 Traveler Cable Installation and Wiring

Install the Traveler Cable and wiring. Refer to your traveler cable provider and cab manufacturer for any special installation instructions. Refer to page CW of the prints for traveler wire count as well as for one-to-one terminal wiring instructions.

NOTE: A separate terminal strip is provided, in the controller, to wire one to one the traveler cable conductors to the controller. Another identical terminal strip is located inside the TOC box. The top portion of the TOC box terminal strip is intended for termination of traveler cable conductors.

3.5.4 Positioning System Installation

NOTE: If using a CEDES APS position system instead of a Landa™, refer to Appendix E for installations instructions then skip to section 3.5.5 below.

3.5.4.1 Landa™ Encoded Tape

Landa™ Positioning System is supplied with necessary hardware to permanently attach it to the rails and crosshead using Unistrut and clamps. Survey the cartop and hoistway to determine the quadrant that provides clearance for the Encoded Tape to run the entire length of the hoistway. Refer to page QR5/PS1 of the prints for installation guidelines.

Start by fastening the top end of the tape to the top-of-hoistway bracket, and then allow the roll to descend the hoistway.

NOTE: The Encoded Tape is polarized so it must be installed with the start position at the bottom of the hoistway. To simplify installation, tape has been coiled with the top end on the outside of the roll.

3.5.4.2 Landa™ Dual Sensor Head Installation and Wiring

The sensor heads can be mounted on any of their three sides to facilitate encoded tape position and sensor head assemble locations. Refer to page QR5/ PS1 of the prints for installation guidelines.

Connect the Sensor heads to the TOC box using the color-coded wiring harnesses provided. Refer to page 6 of the prints for wiring details.

NOTE: The Auxiliary sensor head (selector 2) is the one mounted at the top of the Landa Dual Sensor Head bracket assembly. It connects to the TOC JASEL connector on the TOC board. The Main sensor head (selector 1) is the one mounted at the bottom of the bracket and connects to the TOC JMSEL connector.

NOTE: The sensor head connector location must be at the top of sensor head unit to ensure proper sensor head orientation.

3.5.4.3 Landa™ Positioning System Verification

Using the TOC access point, verify the distance between the two position sensor heads. Navigating to:

- Home
- Install
- Learn Functions
- Virtual Limits
- **Tape Reader Offset**
- **Learn** or **Back**

Verify proper operation of the Landa system. Navigate to:

- Home

Install

View Selector Data

a. Confirm that the position displayed for selector 1 should be smaller than selector 2. If not, swap the pluggable terminal strips JMSEL and JASEL on the P-TOC board.

b. Confirm that selector positions increment and decrement together as you run the car either up or down.

c. Confirm that the RAW delta difference is between 0.7 to1 foot, and roughly matches the physical distance between the two sensor heads as mounted.

NOTE: If you cannot confirm performance as described above, repeat steps in Section 3.5.4 until the landing system operates correctly.

3.5.5 Cab and Hoistway Wiring

3.5.5.1 Mechanical Switches and Peripherals Wiring

Refer to page CW of the prints for cab peripherals, such as Door Operator, Photo Detectors, Fans and Lights, etc. requirements and wiring guidelines. Install and wire as necessary.

Refer to page HMW of the prints for hoistway switches requirements and wiring guidelines. Install and wire necessary mechanical switches.

3.5.5.2 Hall Network

Refer to your Fixture manufacturer for any special installation instructions for the EC-Ready pre-wired Hall Stations. See page QR4/ HMW of the prints for hall station node wiring guidelines.

NOTE: CAN-driven hall station nodes require power and data wiring. Care must be observed not to interchange data wires and power wires so node(s) will be able to access the network and communicate.

3.5.5.2.1 Pixel RJ45 Hall Wiring Option

If the controller purchase included the optional Pixel RJ45 Hall Wiring option, consisting of all the necessary RJ45 cables and RJ45 cable splitters to wire the Hall network to Pixel, refer to page QR4/ HMW of prints and observe that the use of RJ45 splitters is optional the P-Hall boards have two RJ45 female jacks that can be used to interconnect the hall network eliminating the need of splitters and the three feet RJ45 cables used to connect from the splitter to the hall nodes.

NOTE: The on-board P-Hall RJ45 female jacks can be used for either input or output to connect them directly to the hall network eliminating the RJ45 splitters and the three feet cables from splitter to hall nodes.

3.5.6 Verify Network Set Up

Pixel network is divided into Cab and Hall node networks to facilitate setup and troubleshooting. Pixel needs to be told what to expect as part of each network through configuration parameters that can be manipulated navigating to:

Home

Install

Initial Settings

MP CAB Node Network **or** HALL Node Network

NOTE: Even though Pixel's "This Job" network parameters have been factory preset it is important to verify them or be able to re-configure to match job requirements.

3.5.6.1 MP Cab Node Network Setup Verification

The Cab Node Network window indicates to Pixel which nodes to expect as part of "This Job" Cab nodes, verify settings to match job requirements for the correct number and type COP nodes, Door Operator, and load weigh device.

NOTE: If the door operator interface is not CAN driven set CAN Driven Door Operator to No. if no Load Weigh Device is to be used set Load Weigh device to None, or Discrete for dry contact interface, or CAN Based if CAN driven.

3.5.6.2 HALL Node Network Setup Verification

The Hall Node Network window indicates to Pixel which nodes to expect as part of "This Job" Hall Nodes on top of the Hall Call Nodes which are defaulted to be part of the network based on car landing eligibility, verify settings to match job requirements for the correct number and type

NOTE: If top or/ and bottom inspection access operation will be required and the job has front and rear doors openings, the top and bottom access nodes must be configured to the door opening access operation which locks will be bypassed while active.

3.5.7 Verify Network Communications

Once wiring has been completed, and the network set up verified, Pixel needs to acknowledge each node throughout the network, to facility this task Pixel network verification has been divided into four landscape windows as follows:

3.5.7.1 Car Network Landscape

Once cab wiring has been completed can be viewed navigating to:

Home

Install

Learn Functions

Car Network Landscape

Selecting the Car Network Landscape menu causes the Pixel MP to perform a node search for all available CAN-driven cab nodes and display a list of nodes found. Verify that the list confirms all expected and required cab nodes and correct wiring or Pixel nodes switchgear as needed to obtain expected network nodes listing.

3.5.7.2 Pixel Car Nodes Switchgear Configuration

Each Pixel node member having an on-board configuration switchgear, must be configured to behave for the selected task to be performed as follows:

a. COP main front switch 1 On, switches 2, 3, and 4 Off
b. COP Main Auxiliary front switch 2 On, switches 1, 3, and 4 Off
c. COP main rear switch 1 and 2 On, switches 3, and 4 Off
d. COP Main Auxiliary front switch 3 On, switches 1, 2, and 4 Off
e. CNEX Nodes utilize switches 1 to 4 in binary mode to identify node number, with all switches off as reserved configuration, i.e. CNEX one will have switch 1 On, switches 2, 3, and 4 Off.

NOTE: Press the Refresh soft key if any node switch gear has been modified or if any node wiring has been correct to cause the Pixel MP to perform a node search and refresh window data.

3.5.7.3 Car Hall Network Landscape

Once hall wiring has been completed can be viewed navigating to:

- Home
- Install
- Learn Functions
- **Car Hall Network Landscape**

Selecting the Car Hall Network Landscape menu causes the Pixel MP to perform a node search for all available CAN-driven Car Hall nodes and display a list of nodes found. Verify that the list confirms all job required Car Hall nodes, i.e. Top and Bottom Access, Hall Gongs, Etc., refer to job prints page 9 for job required car hall node configuration switch gear.

NOTE: Press the Refresh soft key if any node switch gear has been modified or if any node wiring has been correct to cause the Pixel MP to perform a node search and refresh window data.

3.5.7.4 System Hall Network Landscape

Once hall wiring has been completed can be viewed navigating to:

- Home
- Install
- Learn Functions
- **System Hall Network Landscape**

Selecting the System Hall Network Landscape menu causes the Pixel MP to perform a node search for all available CAN-driven system nodes and display a list of nodes found. Verify that the list confirms all required System Hall nodes, i.e. Hall Calls, Fire Service, Hospital Calls, Etc., refer to job prints page 9 for job required system hall node configuration switch gear.

NOTE: Press the Refresh soft key if any node switch gear has been modified or if any node wiring has been correct to cause the Pixel MP to perform a node search and refresh window data.

3.5.7.5 Unknown Node Landscape

Once hall wiring has been completed can be viewed navigating to:

Home

Install

Learn Functions

Unknown Node Landscape

Selecting the Unknown Node Landscape menu causes the Pixel MP to perform a node search for all CAN-driven nodes whose switchgear has an invalid switchgear configuration and display a list of nodes found, this window is useful in helping to determine if the correct number of nodes has been installed but their switch gear may not be properly configured, refer to job prints page 9 for job required system node configurations switch gear.

NOTE: Press the Refresh soft key if any node switch gear has been modified or if any node wiring has been correct to cause the Pixel MP to perform a node search and refresh window data.

.

3.6 Verify Hoistway Clearance

Inspect the full length of the hoistway to ensure availability of required free running clearances. Check all door locks to ensure that they also have proper clearances.

While running the car, verify that the Landa encoded tape selector heads allow tape to pass freely with no continuous contact. Make necessary adjustments to correct any misalignment.

NOTE: The position of the Landa sensor heads in relation to the encoded tape must be consistently maintained throughout the entire hoistway for the system to function reliably.

3.7 Verify Connectors Properly Seated

Verify that all connectors in the system are correctly seated. Ribbon and plug in field wiring connectors can work loose during shipment or installation. Press firmly on all connectors to verify seating. If this car is part of a group system, verify that required car-to-car communications cables are installed, along with any #18 Awg. cross connection wiring according to the page HMW of the prints.

CAUTION: Proper seating and secure latching of all connectors is critical to reliable system operation.

3.8 Hoistway Position Learn

Pixel needs to “learn” the position of the virtual door zone positions, as well as virtual positions for the top and bottom normal and access limit positions. This process can be completed all at once or by individual “target”. The learn process is broken into sections for clarity.

NOTE: Pixel must learn the virtual bottom landing door zone position first such position will be used to normalize all other virtual positions.

3.8.1 Floor Setup

3.8.1.1 Bottom Landing Setup

Pixel must “learn” the position of the bottom landing first; such position must be learned by positioning the car at the bottom landing position. The bottom landing position will be used to normalize the encoded position read from the tape at the bottom landing to 1.2 feet and use this virtual position to scale all other floors and virtual limits required by Pixel logic.

NOTE: The bottom landing position does not have to be set precisely at this time, its value will be fine-tuned during Final Adjustment Section 4, and all other positions will be automatically adjusted to reflect change in bottom floor normalized position.

To learn the bottom landing position, drive the car to the approximate bottom landing location and Navigate to:

- Home
- Install
- Learn Functions
- Floor Set Up
- Landing Number
- **Rotate Landing Number value to select bottom landing**

Press the Learn soft key, to learn position.

Press the Save soft key, to permanently store position.

NOTE: Press the Cancel soft key to abort learning position and make a new selection, or to return to the previous menu without saving.

NOTE: The Car's Current Position value and the Door Zone Position values change to 1.2 ft value

NOTE: The Down Normal Terminal virtual switch position, DNL, will be defaulted to a position 0.2 Feet below the bottom landing Door Zone Position value, i.e. 1 Foot, its position can be adjusted from 0.1 to 0.5 Feet as needed to match elevator performance.

3.8.1.2 All Other Landings Setup

Pixel now can use the bottom landing learned position to learn and normalize the remaining landing positions. Such landing positions can be learned by Learn by Position (indicated by this symbol) or Learn by Input Value (indicated by this symbol)

NOTE: The landing position does not have to be set precisely at this time – values will be fine-tuned during Final Adjustment Section 4.

Learn by Position

Drive the car to the landing position to "**Learn**" and navigate to:

- Home
- Install
- Learn Functions
- Floor Set Up
- Landing Number
- **Rotate to select landing position to be learn**

Press the Learn soft key, to learn position.

Press the Save soft key, to permanently store position.

NOTE: Press the Cancel soft key to abort learning position and make a new selection, or to return to the previous menu without saving.

Repeat Steps above for all landings.

Learn by Input Value

If the approximate landing to landing distance is known, such distance can be entered to Pixel data base, instead of driving the car to the landing position to learn it.

NOTE: To use this method, Step 3.8.1.1 Bottom Landing Setup must have been performed.

Examples of calculations for landing position entry values, assuming 10 feet from landing to landing:

a. Landing Position second landing= Bottom Landing position + Distance from bottom to second landing.

   Landing position second landing = 1 ft + 10ft = 11ft.

b. Landing Position fifth landing = Bottom Landing position + Distance from bottom to fifth landing.

   Landing Position fifth landing = 1ft + (4 landings x 10 ft per landing)

   Landing Position fifth landing = 1ft + 40 ft = 41 ft

Calculate values for all landings then navigate to:

- Home
- Install
- Learn Functions
- Floor Set Up
- Landing Number
- Rotate to select landing position to be entered
- Rotate to enter calculated value for Landing Position

Press the Save soft key, to permanently store position.

NOTE: Press the Cancel soft key to abort learning position and make a new selection, or to return to the previous menu without saving.

NOTE: The x1 soft key can be used to adjust the magnitude/size of rotational increments by 1, 10, 100, or 1000, back to1.

Repeat Steps above for all but bottom landing landings.

NOTE: The FLOOR SETUP window allows the manipulation of the position indicator landing labels displayed, as well as verification of individual landing CAN-driven network devices. This area will be explored further in Final Adjustment Section 4 of this manual.

3.8.2 Adjust Up and Down Limit Positions

Pixel logic will default the Up Normal Limit (UNL) to be two inches above the top landing, and the Down Normal Limit (DNL) to be two inches below the bottom landing.

The UNL and DNL positions can be adjusted from to be a maximum of 0.5 Feet past the direction of travel if required, navigating to:

- Home
- Install
- Learn Functions
- Limit Switches
- Up Normal Limit (UNL) **-or-** Down Normal Limit (DNL)
- Rotate to desired position value to be entered

Press the Save soft key, to permanently store position.

NOTE: Press the Cancel soft key to abort learning position and make a new selection, or to return to the previous menu without saving.

NOTE: The x1 soft key can be used to adjust the magnitude/size of rotational increments by 1, 10, 100, or 1000, back to1.

NOTE: The Top and Bottom Terminal Markers are not currently used by Pixel logic.

NOTE: Changing the Top and Bottom Terminal Markers value has no effect on the elevator behavior.

3.8.3 Learn Hoistway Access Virtual Limits

Pixel must “learn” the position of top and bottom hoistway access travel positions. Choose from two learn methods below: Learn by Position (indicated by this symbol) or Learn by Input Value (indicated by this symbol).

Learn by Position

On inspection mode, drive the car to the bottom access travel position.

Navigate to:

- Home
- Install
- **Learn Functions**
- Virtual Limits
- Bottom Access Limit (BAL)

Press the Learn soft key, to learn position.

Press the Save soft key, to permanently store position.

NOTE: Press the Back soft key to abort learning position and make a new selection, or to return to the previous menu without saving.

Repeat procedure at the top of the hoistway.

Navigate to:

- Home
- Install
- Learn Functions
- Virtual Limits
- **Top Access Limit (TAL)**

Press the Learn soft key, to learn position.

Press the Save soft key, to permanently store position.

NOTE: Press the Back soft key to abort learning position and make a new selection, or to return to the previous menu without saving.

Learn by Input Value

NOTE: To use this method, Step 3.8.1 Bottom Floor Setup must have been performed.

a. Note the positions for the Bottom and Top landing recorded on Step 3.8.1.1 and 3.8.1.2 above.
b. Determine the allowed travel distance, based on your cab size and elevator code requirements.
c. BAL position = Bottom landing Position + allowed travel distance from b above
d. TAL position = Top landing Position - allowed travel distance from b above

Navigate to:

Home

Install

Learn Functions

Virtual Limits

Bottom Access Limit (BAL)

Rotate to desired value for BAL position

Top Access Limit (TAL)

Rotate to desired value for TAL

Press the Save soft key, to permanently store position.

NOTE: Press the Cancel soft key to abort learning position and make a new selection, or to return to the previous menu without saving.

NOTE: The x1 soft key can be used to adjust the magnitude/size of rotational increments by 1, 10, 100, or 1000, back to1.

3.9 Transfer of Hoistway Layout

Section 3.8 above allowed Pixel MP Microprocessor to create a virtual image of the hoistway, such image needs to be transferred to the safety microprocessors as part of the Safety Configuration for Pixel to allow the car to operate under Inspection, TEST, or Automatic mode of operation once Construction Mode is disable, to transfer the Safety Configuration File to SP1 and SP2 microprocessors navigate to:

- Home
- Install
- File Transfer
- **Safety Configuration Upload**

NOTE: Press the **Transfer** soft key to transfer a configuration file to the safety microprocessors or the **Back** soft key to abort Transfer.

NOTE: Pixel will stop all elevator functions and prompt user to wait for transfer mode status, controller setting requirements for transfer mode will be displayed as File Transfer selection is made

3.10 Disable Construction Mode of Operation

Pixel components have now been installed and functional operation verified. You can now transition Pixel from Construction Mode to Inspection Mode. Construction mode is enabled or disabled by using the Touch & Go™ knob to navigate to:

- Home
- Install
- Construction Mode
- **Disable** or **Cancel**

NOTE: Construction Mode must be set to Disable in order to Enable any automatic mode of operation.

Section 4 – Final Adjustment

4.1 Door Adjustment

The elevator door operator (or operators) should be adjusted to provide desired door performance.

a. Position the car in a convenient location within the hoistway to adjust car doors to a preliminary setting.

b. Place the car on inspection mode then follow the adjustment procedure provided by the door operator manufacturer.

NOTE: Most solid-state door control systems use adjustment procedures that require no interaction with the elevator controller.

4.1.1 MOVFE CAN-bus Door Operator Adjustment

If the controller has been provided with the MOVFE CAN-bus interface, refer to page QR3 of the job prints and the MOVFE door operator manual for programming the MOVFE door operator parameters to allow communications with Pixel controller and verify the following parameters in Pixel, from any of Pixel's three access points, Navigate to:

■ Home

Install

Initial Settings

MP Cab Node Network

Front Door Operator ; Set to MOVFE, for front doors

And/ Or

Rear Door Operator ; Set to MOVFE, for Rear doors

Press the ■ Save soft key, to permanently store selection(s).

NOTE: Pixel Allows for discrete & CAN-bus door interfaces to coexist.

NOTE: Pixel emulates the MOVFE door operator programming tool functionality making available through any of Pixel's three access points to facilitate and validate adjustment and performance from within the Cab.

4.2 Check Hoistway Clearances

In order for the door operator to operate properly, all door equipment clutches, rollers, etc. must be adjusted to the correct running clearances.

Make sure all hoistway and car doors for this elevator are closed and locked.

Run the car the entire length of the hoistway on inspection, while riding the cartop, to be sure that the hoistway is completely clear of obstructions. View the cartop system access point to confirm that the positioning system tape and sensor head continuously track car position. Navigate to:

Home

Install

View Selector Data

Make any necessary adjustments to tape alignment before proceeding.

4.3 Use of Test Switch

Place the TEST switch in the “Test” position (the TEST switch is located on the lower right of the P-MP board). In the test position the controller will not open doors (either front or rear) and the car will behave as on Independent Service mode of operation.

Switch from inspection to normal operation. The car should travel to the closest landing.

NOTE: If this does not happen, view the Pixel screen from any system access point and see if a fault condition is displayed. Consult onboard help by pressing the yellow **Help** key for guidance to resolve any fault that might prevent the car from moving.

The car will be ready to respond to car call demand as soon as the **READY** and **AT FLOOR** indicators are lit, and the **RE-LEVEL** indicator is off. This confirms that the car has completed leveling at a landing. If any door opening device is active – Door Open Button, DOB, Safety Edge, SE, Photo Eye Sensor, PHE, Door Lock, Door Closed, Car Gate not closed – the car will be prevented from responding to car call demand.

Observe door input status by navigating to:

Home Troubleshoot Flags **Door Flags**

Correct wiring or repair any device necessary to eliminate the active input that is preventing car movement.

Refer to **Section 7 – Troubleshooting** in this manual for more troubleshooting assistance.

4.4 Get Car Ready to Run in Test Mode

Set the Machine Room Inspection switch located in Pixel MP Board to INSP and the TEST switch to TEST position, release the car from car top, in car, or Access inspection modes to allow it to be operated from Machine Room Inspection Mode. Set Pixel display to Home/Startup and observe for Machine Insp. and No Faults display indication, press the HELP push button for guidance in resolving any reported fault condition.

Use the Pixel MP onboard Machine Room Inspection switch gear to drive the car past the bottom landing until the down terminal position of travel is reached and the display reports Down Terminal Switch Open fault. At this position verify that the car is positioned within a couple of inches below the bottom floor.

Enable **ETS Bypass** to prevent SP1 and SP2 safety processors from triggering Slowdown Terminal Overspeed faults.

Navigate to:

- Home
- Install
- Learn Functions
- ETS Learn
- ETS Learn Up
- ETS Bypass Option
- Yes

Press the **Save** soft key, to enable bypass.

NOTE: Press the **Cancel** soft key to abort and make a new selection, or to return to the previous menu without saving.

Remove the car from Machine Insp. observe for **TEST** mode and **No Faults** display indication. Press the **HELP** push button for guidance in resolving any reported fault condition, and section 4.5 below to reset Non-TEST Mode of operation. The car should re-level up to the floor.

NOTE: The car will attempt to re-level into floor position once Machine Room Inspection switches to TEST Mode of operation.

4.5 Reset Non-TEST Modes

If Pixel main window displays other Mode of operation, such as Emergency Power, Hospital Service, Fire Service, etc. such modes must be cleared to allow

TEST Mode functional operation, in order to reset non latching modes of operation one must clear the mode triggering input, and for latching modes of operation such Fire Service and Earthquake Operation they can be reset by clearing the triggering inputs, then entering and exiting Construction Mode. Refer to section 3.3.11 and 3.10 to Enable or Disable Construction Mode of Operation.

NOTE: At this point Pixel's screen should display TEST Mode, doors closed, and No Fault in order for the car to run in TEST Mode.

4.6 Entering Calls to Run in Test Mode

Pixel provides an **Auto Call Simulation** menu to allow car calls to be entered in TEST Mode. Four choices are provided in this menu as follows:

f. **Up and Down from xxx to yyy**, where xxx and yyy represent the landing numbers where the car will run to and from.

g. **Circle** xx floors around landing yyy, where xx represent the number of floors above and below the landing yyy where the car will run to and from.

h. **xx floors to runs Up and Down**, where xx represent the number of floors to run, one, two, etc. floor runs up or down until the end of hoistway in the direction of travel before proceeding with the same pattern in the opposite direction.

i. **Run to floor xxx**, where xxx represents the destination landing.

Auto Call Stop Dwell Timer, from 00 to 99 seconds, represents the timeout to be allowed between each run for entries a, b, and c above.

To access the Auto Call Simulation menu, navigate to:

Home
Adjust

Ride Performance

Auto Call Simulation

"Desired entry from a to d above"

Select xxx and yyy landing numbers

Auto Call Stop Dwell Timer

"Dial up time out period"

Press the **Enable** soft key, to enable and start auto call simulation.

NOTE: As soon as the **Enable** soft key is press the car call entry process will start and the car may start a run.

4.7 Speed Performance Parameters Description

Table 4.7-1 lists adjustable parameters available to customize car speed and performance. **Sections 4.7.1** through **4.7.15** provide a brief description for each parameter, the adjustment range, and a more detailed explanation for each available parameter.

Table 4.7-1 Speed Parameters	
4.7.1 Contract Speed	4.7.9 Inspection Trip Speed
4.7.2 Slowdown Dis. per 50FPM	4.7.10 Leveling Trip Speed
4.7.3 STD Offset Adjustment	4.7.11 Up ETS % Trip Speed
4.7.4 SLDN End Marker	4.7.12 Down ETS % Trip Speed
4.7.5 Level Zone	4.7.13 Down ETS Warning Count
4.7.6 Dead Zone	4.7.14 High Speed on Inspection
4.7.7 Leveling Adjustment	4.7.15 Releveling UP Offset
4.7.8 Highspeed Trip Speed	

4.7.1 Contract Speed

Brief Description: The Contract Speed parameter must be set to the contract speed of this car. The value is preset at the factory based on speed specified on your data sheets.

Adjustment Range: **25 - 1400 fpm**

Default: **Set to car contract speed**

Units of Measure: **feet per minute**

Detailed Explanation: The Contract Speed parameter sets the scale value for all speed monitoring parameters. This parameter must be set correctly for all other speed parameters to function properly.

4.7.2 Slowdown Dist. per 50 FPM

Brief Description: Distance required for the elevator to slowdown for every 50 fpm of contract speed.

Adjustment Range: **10 – 30 Inches**

Default: **12 in**

Units of Measure: **Inches**

Detailed Explanation: Adjust parameter value up to allow more slowdown distance while decelerating into a target landing, while sacrificing performance, decrease value to improve performance

4.7.3 STD Offset Adjustment

Brief Description: Offset value added to the step-down position before stepping down to the next floor to compensate for speed differential between Up and Down speeds.

Adjustment Range: **0 – 1.5 Feet**

Default: **0 ft**

Units of Measure: **Feet**

Detailed Explanation: With an empty cab increment parameter value to prevent car from dragging into the floors in the down direction to compensate for speed differential between Up vs. Down, Pixel will dynamically adjust value as the measured cab speed increases due to load in the cab.

4.7.4 SLDN End Marker

Brief Description: Distance from the Dead Zone center where the slowdown speed monitoring stops to give way to Leveling Speed monitoring.

Adjustment Range: **0.5 – 2.0 ft**

Default: **0.5 ft**

Units of Measure: **feet**

Detailed Explanation: Adjust parameter value up to decrease distance used for slowdown monitoring speed. Always keep value equal to or larger than Level Zone value.

4.7.5 Level Zone

Brief Description: Level Zone, or Trucking Zone, defines the Door Zone area where leveling and door operations are allowed.

Adjustment Range: **0.01 - 1.00 ft**

Default: **0.5 ft**

Units of Measure: **feet**

Detailed Explanation: Increasing the Level Zone, increases the area where door operations and leveling speed monitoring take place.

4.7.6 Dead Zone

Brief Description: Area within Door Zone, or Trucking Zone, where the car is considered to be leveled with the floor, the accuracy value is the parameter value divided by two to account for above and below the door center position.

Adjustment Range: **.01 - .25 ft**

Default: **0.05 ft**

Units of Measure: **feet**

Detailed Explanation: Higher values in Dead Zone decreases landing accuracy, lower values increases accuracy but may generate excessive re-leveling.

4.7.7 Leveling Adjustment

Brief Description: Area outside Dead Zone where direction speed is dropped while approaching a landing to allow the car to target the floor without overshooting while keeping leveling accuracy.

Adjustment Range: **.000 - .050 ft**

Default: **0.000 ft**

Units of Measure: **feet**

Detailed Explanation: Increasing the Leveling Adjustment allows more time for valves to close to prevent overshooting and re-leveling by dropping out direction prior to entering the Dead Zone.

4.7.8 Highspeed Trip Speed

Brief Description: Speed value at which the safety processors, SP1 or SP2 will declare an Overspeed condition to trigger a Contract Overspeed latching fault bringing the car to a halt.

Adjustment Range: **0001 - Contact Speed + 25%**

Default: **Contract Speed + 10%**

Units of Measure: **feet per minute**

Detailed Explanation: Adjust Highspeed Trip Speed in conjunction with the high-speed valves to prevent car speed from overshooting contract speed setting reaching trip threshold settings to prevent safety processors, SP1 or SP2 from declaring a Contract Overspeed latching fault.

4.7.9 Inspection Trip Speed

Brief Description: Speed value at which the safety processors, SP1 or SP2 will declare an Overspeed condition to trigger an Inspection Overspeed latching fault bringing the car to a halt.

Adjustment Range: **000 – 187 fpm**

Default: **100 fpm**

Units of Measure: **feet per minute**

Detailed Explanation: Adjust Inspection Trip Speed in conjunction with the low speed valves to prevent car speed from overshooting Inspection trip speed setting to prevent safety processors, SP1 or SP2 from declaring an Inspection Overspeed latching fault while car is running on Inspection mode.
For cars with contract speed below 150 fpm and where the elevator codes allow for the car to be operated on high speed while on Inspection Mode and the option “High Speed on INS” is set to Y, the adjustment value for this parameter should be set equal to the High Speed Trip setting parameter value.

4.7.10 Leveling Trip Speed

Brief Description: Speed value at which the safety processors, SP1 or SP2 will declare an Overspeed condition to trigger a Leveling Overspeed latching fault bringing the car to a halt.

Adjustment Range: **000 - 187 fpm**

Default: **100 fpm**

Units of Measure: **feet per minute**

Detailed Explanation: Adjust Leveling Trip Speed in conjunction with the Valves response to ensure that the car will be running under the Leveling Trip Speed setting when entering the leveling zone to prevent safety processors, SP1 or SP2, from intermittently declaring a Leveling Overspeed latching fault.

4.7.11 Up ETS % Trip Speed

Brief Description: Defines the speeds at which the Safety Processors will declare a Slowdown Overspeed Fault in the up direction. At a value of 10% an overspeed condition is declared if the car is traveling at or above 110% of the learned normal approach speed values at any point in its approach into the up-terminal landing.

Adjustment Range: **000 - 100 %**

Default: **10 %**

Units of Measure: **Percentage of digitized learned pattern**

Detailed Explanation: Adjust Percentage Overspeed to prevent safety processors, SP1 or SP2 from declaring a Slowdown Overspeed latching fault in the Up direction.

NOTE: Percentage Overspeed monitors the difference between the learned normal slowdown positions and speeds and compares it to the car's current position, speed and direction dynamically.

4.7.12 Down ETS % Trip Speed

Brief Description: Defines the speeds at which the Safety Processors will declare a Slowdown Overspeed Fault in the down direction. At a value of 15% an overspeed condition is declared if the car is traveling at or above 115% of the learned normal approach speed values at any point in its approach into a terminal landing.

Adjustment Range: **000 - 100 %**

Default: **15 %**

Units of Measure: **Percentage of digitized learned pattern**

Detailed Explanation: Adjust Percentage Overspeed to prevent safety processors, SP1 or SP2 from declaring a Slowdown Overspeed latching fault.

NOTE: Percentage Overspeed monitors the difference between the learned normal slowdown positions and speeds and compares it to the car's current position, speed and direction dynamically.

4.7.13 Down ETS Warning Count

Brief Description: Defines the number of consecutive detections of an ETS overspeed in the down direction that need to occur before the fault is latched and the car is taken out of service.

Adjustment Range: **00 - 50**

Default: **03**

Units of Measure: **None**

Detailed Explanation: Adjust to the number of consecutive Down Overspeed occurrences need to occur before fault is latched and the car is taken out of service.

NOTE: If parameter is set to 00 the Down ETS Overspeed fault in the down direction will be disabled.

NOTE: After a non ETS overspeed run into the down terminal landing the threshold value detection is reset to its parameter programmed value.

4.7.14 High Speed on INS

Brief Description: Option allows for the High-speed output to be enabled while car runs on Inspection Mode.

Adjustment Range: **Yes- No**

Default: **No**

Units of Measure: **None**

Detailed Explanation: While set to Yes, the car will run with High speed output active, activating high speed valves on Inspection Mode, while set to No the car will run high speed output inactive on Inspection Mode activating Low Speed valves only.

4.7.15 Releveling Up Offset

Brief Description: Offset value added to the Leveling Up location to allow Pixel to drive the car further up towards the center of the Dead Zone on a Relevel Up operation.

Adjustment Range: **0 – 0.250 Feet**

Default: **0 ft**

Units of Measure: **Feet**

Detailed Explanation: Incrementing parameter value allows Pixel to drive the cab farther up into the Dead Zone area to compensate for an up fast closing valve from leaving the cab at a position too close to the up leveling position to prevent excessive releveling.

NOTE: Releveling Up Offset value must be kept less than or equal to the value of Dead Zone parameter divided by 2.

4.8 Verify Speed Parameters

NOTE: Even though Pixel's "This Job" parameters have been factory preset it is important to verify them, when this manual instructs you to do so, for optimum system performance.

4.8 .1 Verify Short Floor Distance

The shortest floor to floor distance must be larger than the slowdown distance required to decelerate from high speed into a landing plus 6 inches; to determine if job installation require short floor logic perform following calculation:

Assume:
1. Car speed of 125 ft/ min
2. Slowdown Dist. Per 50FPM = 12 in.
3. Installation minimum floor to floor distance 2 ft, 24 in.

Floor to Floor distance= [(Speed/ 50) X Slowdown Dist. Per 50FPM] + 6 In.

Floor to Floor distance= {(125/ 50) x 12} + 6 = 36 in

NOTE: The minimum floor to floor distance supported by Pixel is 1 ft, 12 in.

NOTE: If the Floor to Floor distance value is less than or equal to this job shortest floor to floor distance skip to section 4.8.2, Verify Speed Parameter Settings, below.

36 in is larger than the 24 in available, the installation will require the Short Floor Logic, which can be implemented through Pixel's Hydro Per Floor Stepping Logic functionality.

The hydro per floor stepping logic uses a set of "virtual magnets" which represent stepping positions in the hoistway. The stepping positions are the landing system locations at which the STU, STD, ISTU, and ISTD virtual magnets are located.

NOTE: The hydro per floor stepping logic can be used for non-short floor jobs if desired.

To enabled hydro per floor stepping logic the following steps need to be performed:

1. Floor Setup, Section 3.8.1 of this manual must be completed
2. Verify that legacy Short Floor Logic Parameter is set to No navigating to:

   Home

   Adjust

   Car Performance

   Hydraulic Options

   Short Floor Logic Stepping; Set to No

3. Enable Per Floor Stepping Option navigating to:

   Home

   Install

   Initial Settings

   Per Floor Hydro Stepping

   Stepping Options

   Per Floor Stepping Option; Set to Yes

NOTE: If Per Floor Stepping Option was not factory preset to "Yes", it is advisable to contact Elevator Controls Corp. Technical Support Team with job specific requirements for guidance as how to preset the speed parameters that may be needed for this job.

4. Auto populate virtual stepping magnets navigating to:

   Home

Install

Initial Settings

Per Floor Hydro Stepping

Stepping Auto Place ; Follow instructions on Pixel screen.

NOTE: The short floor stepping virtual magnets will be placed for the most conservative setting. While executing one floor runs through short floors the car may run in leveling speed for a while at this point of the adjustment process.

5. Press the Computer Reset Button to reset the P-MP and re-start Pixel and incorporate Per Floor Stepping logic.
6. Perform a Safety Configuration Upload to transfer safety parameters to the safety microprocessors.

4.8 .2 Verify Speed Parameter Settings

Pixel's microprocessor MP uses programmed parameters to optimize car performance. Verify that Pixel speed parameters match job requirement. View parameters, using the Pixel screen, and compare settings to the speed profile table below navigating to:

Home

Adjust

Ride Performance

Speed Profile

Speed Parameters	**Default Settings**	
Hydraulic Options	**Per Floor Stepping Option = NO (NO SHORT FLOORS)**	**Per Floor Stepping Option = Yes**
Contract Speed	XXX fpm Job Specific	XXX fpm Job Specific
Slowdown distance	12 in	12 in
STD Offset	0.000 ft	0.000 ft
SLDN End Marker	1.0 ft	0.5 ft
Level Zone	0.83 ft	0.50 ft
Dead Zone	0.05 ft	0.05 ft
Leveling Adjustment	0.000 ft	0.000 ft
Highspeed trip speed	Contract Speed +15%	Contract Speed +15%
Inspection Trip Speed	100 fpm	100 fpm

Leveling trip Speed	100 fpm	100 fpm
Up ETS % Trip Speed	10%	10%
Down ETS % Trip	15%	15%
Down ETS Warning	03	03
High Speed on INS	No	No
Releveling Up Offset	0.012ft	0.012ft

4.9 Run Car to Every Landing

4.9.1 Slow Down Distance per 50FPM Adjustment.

Verify the car is able to travel to every landing on TEST Mode from the machine room using Auto Call Simulation section 4.6 above, Adjust valves in conjunction with Slowdown distance per 50fpm parameter, to make sure the car is able to slowdown and stop at every landing while preventing landing overshoots while maintaining elevator performance.

NOTE: If Per Floor Stepping Option is set to Yes and the job has short floor to floor distances, the short floor stepping virtual magnets will be placed for the most conservative setting. While executing one floor runs through short floors the car may run in leveling speed for a while at this point of the adjustment process.

NOTE: Ride quality & performance for short floor(s) will be adjusted latter.

4.9.2 STD Offset Adjustment

With an empty cab observe and make a note of the displayed speed, in Pixel's home screen, in the up and down direction while making long floor runs to calculate initial value for STD Offset Adjustment parameter as per the following example for a 25fpm faster up Vs. down speed:

STD Offset Adjustment = (Speed Difference/ 50 fpm) X Slow down distance per 50FPM

STD Offset Adjustment = (25 fpm / 50 fpm) X 12in = 6 in

Convert value to be programmed into feet = $6\text{ in} \times \left(\frac{1\text{ ft}}{12\text{ in}}\right) = 0.5\text{ ft.}$

Adjust parameter value to a lower value to prevent overshooting the floors on the down direction.

NOTE: If down speed is larger than up speed, verify pumping unit performance with the manufacturer. **Do not adjust this parameter to compensate differential.**

4.10 Pump Motor Soft Stop

Regulation of the pump motor for the up direction is controlled by outputs AAo and Po, and optionally BK, outputs driving the pump motor contactors refer to prints page 1 and 4 for circuits interface. Verify in the up direction when the car comes to a stop that the pump motor keeps running until after the valves close to prevent car from sinking at the floor. The Soft Stop timer which controls the timeout for this operation is found by navigating to:

Home

Adjust

Car Performance

Timers

Hydraulic Timers

Soft Stop

NOTE: The ride quality and final stop must be acceptable before proceeding forward; steps below require riding the car.

NOTE: The COP Independent Service switch was switched to ON position during installation of the COP, before switching car TEST Mode operation OFF verify it still on the ON position.

Place the CAPTURE switch to CAPTURE, to prevent the car from participating in any hall system dispatching, remove the car from TEST MODE, to place it in Independent Service Mode and be able to run it from within the car while enabling door operation.

4.11 Adjust Leveling Adjustment

To determine if parameter needs to be adjusted, on inspection run the car out of the Dead Zone area in the down direction and allow it to reposition up while observing final level position, then run the car on automatic in the up direction while observing final level position or if it overshoots the landing.
If final level position from an automatic run is above the reposition up position adjust the Leveling Adjustment value to compensate for the difference and to prevent overshoots in the up direction.

NOTE: If overshoots in both up and down direction occurs review adjustments from section 4.9 Slowdown Distance per 50FPM Adjustment above. **Do not adjust this parameter.**

4.12 Adjust Releveing Offset

To determine if parameter needs to be adjusted, on inspection run the car out of the Dead Zone area in the down direction and allow it to reposition up while

observing final level position, if position is below the Door Zone Center learned position increment parameter to compensate for the difference. Increasing the value in this parameter allows Pixel to drive the car farther up towards the Door Zone Center learned position and helps to prevent releveling up due to the car position being too close to the leveling up position on a relevel.

4.13 Adjust Floor Levels

To prevent SP1 and SP2 safety processors from triggering **Unintended Movement Fault** latching fault, while adjusting floor levels, place the CAPTURE switch on the P-PM board to CAPTURE, Independent Service Mode of operation inside the cab, and enable **Unintended Movement Bypass** navigating to:

- **Home**
- Install
- Code Compliance Test
- Unintended Movement
- **Unintended Movement Bypass**
- Yes

Press the **Save** soft key, to enable bypass.

NOTE: Press the **Cancel** soft key to abort and make a new selection, or to return to the previous menu without saving.

The task to verify and correct the learned landing level position is best performed from inside the cab on Independent Service mode of operation and is accomplished by driving the car to every landing and adjusting the landing level position Learned during initial set up to its final proper level position. To perform this task from the COP access point, navigate to:

- Home
- Install
- Learn Functions
- Floor Setup
- Landing Number
- Door Zone Position

"Adjust current Position up-down as needed"

Press the **Save** soft key, to save modified position or the Cancel soft key to reset to back value to last stored position.

NOTE: As soon as the **Save** soft key is press the car will re-level into the saved floor level position.

NOTE: The PI Label can also be modified while performing the floor level task from within this menu by Selecting PI Label menu entry and manipulating its contents to match those on the COP landing push buttons.

NOTE: The Hall Call and Hall Gong nodes operation can also be verified from within this menu by Selecting Verify Floor Hall Nodes menu entry.

4.14 Adjust STU and STD Virtual Magnets

NOTE: If Per Floor Stepping Option is set to "No" skip to section 4.15, ETS Learn Below.

The fine tuning of the Virtual STU and STD magnets needs to be performed in a per floor basis to obtain the best performance per individual up and down short floor runs, follow procedure below per each short floor.

1. Identify which floors will benefit from Virtual STU and STD magnets adjustment navigating to:

   Home

   Install

   Initial Settings

   Per Floor Hydro Stepping

   Stepping Options

   Short Floor List: Write down floor numbers listed for reference.

2. Select one floor from list to be adjusted and perform short floor run(s) up and down while adjusting the stepping virtual positions for desired short floor to improve comfort and performance, refer to section 4.6, Auto Call Simulation, to set up the car to auto run up and down, then navigating to:

   Home

   Install

Initial Settings

Per Floor Hydro Stepping

Virtual Magnet Centers

Floor ; Select desired from list above

3. Adjust the STU and STD positions, this is equivalent to allowing the car to run longer or less in high speed towards the target. Therefore, reducing the STU or STD position values will allow the car to run longer in high speed while performing a short floor run and vice versa. For example: If the current STD position is 2.5 feet, changing the value to 2.0 feet will allow the car to run for 0.5 feet longer with the high-speed valve energized in the down direction.
4. Repeat steps 2 and 3 above for every landing per list above

4.15 ETS Learn

After all ride adjustments described above are complete, Pixel needs to learn the speed profiles as the car approaches the terminal landings. This task is accomplished through the ETS Learn menu by following the displayed instructions. ETS Learn menu can be accessed by navigating to:

NOTE: Take the car to a terminal landing placing a car call. The car must be at a terminal landing for Pixel to enable ETS Learn operation.

Home

Install

Learn Functions

ETS Learn

NOTE: The car will need to perform one run up and one run down through the entire length of the hoistway follow displayed instructions to perform this task.

NOTE: The learned terminal landings speed profiles must be transferred to SP1 and SP2 safety microprocessors follow displayed instructions to perform transfer or refer to section 4.15 below to perform a Safety Configuration File Transfer, or the car will not be allowed to run automatic modes of operation.

NOTE: Disable ETS Bypass option and verify that the car can run the entire length of the hoistway without triggering a Slowdown Overspeed fault. Refer to section 4.4 above replacing last selection Yes with No.

NOTE: Disable Unintended Movement Bypass option to enable Unintended Movement monitoring logic and be able to switch the car to Automatic mode of operation as needed. Refer to section 4.13 above replacing last selection Yes with No.

4.16 Transfer Safety Configuration File

To transfer the Safety Configuration File to SP1 and SP2 microprocessors navigate to:

Home

Install

File Transfer

Safety Configuration Upload

NOTE: Pixel will stop all elevator functions and prompt user to wait for transfer mode status, controller setting requirements for transfer mode will be displayed as File Transfer selection is made.

Press the **Transfer** soft key to transfer a configuration file to safety microprocessors or the **Back** soft key to abort transfer.

NOTE: Through this procedure Pixel will prompt you to wait while the system enters and exits file transfer mode operation. **Do not press any keys during a wait timeout to prevent file transfer corruptions.** Wait for Pixel to confirm that it is ready to receive dashboard command.

.

4.17 Up and Down ETS % Trip Speed Adjustment

Pixel firmware monitors the CAB speed throughout the hoistway including the approach speed to both terminal landings for the Normal Terminal Speed limiting means (NTS) and Emergency Terminal Stopping Means (ETS) speed monitoring. The ETS detection parameters are separate for the up and down direction as follows:

Up Direction:
The up-direction detection threshold can be adjusted by the Up ETS % Trip Speed to ensure that the plunger does not strike its solid limit of travel at speed in excess of 50 fpm. Adjust the Up ETS % Trip Speed parameter percentage to prevent

nuisance tripping while also allowing for the detection to comply with detection functionality requirements.

NOTE: Perform a safety configuration file transfer after changing the Up ETS % Trip Speed parameter value to transfer the new values to the safety processors and be able to verify performance of the parameter changes

Down Direction:
The Down-direction detection threshold can be adjusted by the Down ETS % Trip Speed to prevent the plunger from striking of its solid limit of compression. Adjust the Down ETS % Trip Speed parameter percentage to prevent nuisance tripping while also allowing for the detection to comply with detection functionality requirements.
The speed regulation for hydraulic elevators in the down direction depends heavily on cab current weight and oil temperature and for some installations the learned ETS detection speed vs current speed could exceed the ETS % threshold value creating nuisance ETS overspeed detections, the nuisance detection can be compensated through the Down ETS Warning Count parameter, such as to allow the ETS detection while preventing the latching of the event, thus allowing the car to resume functionality unless the number of consecutive overspeed detections exceed the parameter value.

NOTE: Perform a safety configuration file transfer after changing the ETS % trip Speed parameter value to transfer the new values to the safety processors and be able to verify performance of the parameter changes

NOTE: If parameter is set to 00 the Down ETS Overspeed fault in the down direction will be disabled.

NOTE: ETS overspeed detection is only required per code in the up direction. **Down Direction is not Required**.

NOTE: After a non ETS overspeed run into the down terminal landing the threshold value detection is reset to its parameter programmed value.

4.18 Verify Overall Car Performance

Pixel car controller must be operating to desired performance, verify and correct following operations:

a. Position Indicator displays proper landing labels.
b. Car calls can be entered through the COP push buttons.
c. Every push button in the COP performs its function Door Open, Door Close, Passing Gong Enable, etc.
d. Car Responds to all capable Hall Calls.
e. Hall and Car gongs performance.

f. Overall car functionality and performance.

NOTE: If any speed parameter or learned parameter is modified the MP will display an error indicating Safety configuration mismatch requiring to execute a Safety Configuration File Transfer to SP1 and SP2 microprocessors, refer to section 4.12 above to perform this task, or the car will not be allowed to run on automatic mode of operation.

WARNING: Safety tests sections 5 and 6 below, overall car function performance, and all local safety inspections must be completed before releasing car to public.

Section 5 – Speed Monitoring Adjustment

5.1 Car Speed Monitoring System

The Pixel Elevator Controller – working in conjunction with the Landa™ dual head positioning unit – monitors the position and speed of the elevator throughout the entire hoistway.

The Landa™ Positioning System provides actual car position “on demand” (absolute position is read from the Landa™ Encoded Tape) and car speed is calculated based upon change in car position over a time interval.

The SP1 and SP2 safety processors individually read the Landa™ Positioning System at a rate of approximately once every 10 milliseconds for current car position.

The Landa™ Positioning System includes dual sensor heads. These redundant heads continuously read encoded tape and position information from each which is compared against the other for validation (“Main Tape Position” and “Auxiliary Tape Position”). A free-running timer is used to provide an accurate measure of the time between position samples, which is used to calculate car speed as follows:

Cab speed = Δ*position* ÷ Δ*time, where*
Δ*position = (previous cab position) – (current cab position)*
Δ*time = (previous cab position time) – (current cab position time)*

5.1.1 Defining Overspeed

Pixel’s SP1 and SP2 safety processors always monitor car speed to detect car speeds in excess of the car’s programmed speeds, including overspeed conditions as the car approaches the terminal landings.

To determine if the speed of the car is normal or an overspeed as the car approaches either terminal landing, Pixel’s main computer learns the landing zone for each floor during the hoistway position learning process. It also learns the “normal speed profile” that is executed as the car approaches the terminal landings in order to compare the two. The normal speed profile is learned from the moment the car begins its deceleration process to the final stop at the terminal landing. Both up and down terminal deceleration profiles are learned and stored.

The learn process once performed and verified during elevator installation will be transferred and permanently stored by the three microprocessors that make up the Pixel controller’s main processing unit (MP, SP1, SP2). The learn process must be accomplished and transferred before the car can be run on any passenger automatic mode of operation (otherwise the car is only allowed to run on Inspection Operation).

5.1.2 Monitoring Overspeed

Pixel's SP1 and SP2 safety processors independently monitor the following overspeed conditions:

a. **Elevator Highspeed Trip Speed** elevator cab speed exceeds programmed Contract trip speed.

b. **Inspection Trip Speed** elevator cab speed exceeds 150 ft-min or programmed Inspection trip speed, whichever is less.

c. **Leveling Trip Speed** elevator cab speed exceeds 150 ft-min or programmed Leveling trip speed within the landing leveling zone, whichever is less

d. **Terminals % Trip Speed** elevator cab speed in the direction of travel exceeds learned terminal speed profile plus programmed % trip speed.

NOTE: Speed monitoring final adjustments should be performed only after elevator speed performance has been attained. It must be readjusted following any speed parameter change.

NOTE: Confirm that Pixel's main screen displays contract speed and speed performance correctly before proceeding with final speed monitor adjustments.

5.1.3 Speed Monitoring Adjustment

NOTE: Place the car in TEST Mode of operation before proceeding with speed monitoring adjustments.

Pixel speed monitoring parameters are part of the Speed Profile group and can be accessed by navigating to:

Home

Install

Initial Settings

Speed Profile

High Speed Trip Speed (entry 8 of 20)

Set to contract speed value plus 10%

OR

Inspection Speed Trip Speed (entry 9 of 20)

Set to Inspection Speed times two, up to a maximum value of 150 ft/min.

OR

Leveling Trip Speed (entry 10 of 20)

Set to Leveling Speed times 10, up to a maximum value of 150 ft/min.

OR

ETS **% Trip Speed** (entry 11 of 20)

Set Terminal's % Trip Speed parameter to 10% then run the car from the top to the bottom landing, increment % value as needed to prevent car from tripping Slowdown Overspeed Fault.

Press the **Save** soft key, to save modified speed trip value or the **Cancel** soft key to abort speed monitoring value change.

Run the car to confirm that revised settings do not cause a speed monitoring fault.

If Speed Monitoring Trips are occurring as the car runs, adjust the corresponding trip speed value in conjunction with valves unit to prevent speed overshoots.

NOTE: Verification of Speed Monitoring will be performed in Code Compliance Verification Section 6 following.

NOTE: If any speed parameter or learned parameter is modified the MP will display an error indicating Safety configuration mismatch requiring to execute a Safety Configuration File Transfer to SP1 and SP2 microprocessors, refer to section 4.12 above to perform this task, or the car will not be allowed to run on automatic mode of operation.

Section 6 – Code Compliance Verification

A17.1/B44 Elevator Safety Tests & Inspection

6.1 Performing Elevator Safety Tests & Inspections

WARNING: Safety tests should be performed by a QUALIFIED ADJUSTER OR SERVICE PERSONNEL. A helper should always be present and prepared to turn off the main line disconnect to remove power from the elevator if needed when the car is run with safety switches bypassed. PROCEED WITH CAUTION.

CAUTION: Perform each test procedure below only after the elevator system has been adjusted and verified to comply with job performance requirements and transfer of final safety configuration data from the MP to the SP1 and SP2 processors has been performed.

NOTE: The following procedure is intended as a guide while performing periodic inspection and safety tests of the elevator system. Please refer to the Safety Code for Elevators and all applicable local codes for specific requirements.

6.2 Intentionally Left Blank

6.3 Intentionally Left Blank

6.4 Safety Speed Tests

6.4.1 Car Buffer Test – Fully Loaded Car

The Pixel Car Buffer test is accomplished using a simple menu driven process and the procedure below:

a. Set CAPTURE switch, located on the MP board, to CAPTURE which will prevent the car from servicing Hall Calls.
b. Place full load test weights in the car.
c. Drive the car to the top landing by entering a Car Call.
d. Set TEST switch, located on the MP board, to TEST which will enable Test Mode operation and disable door operation.
e. Turn off main power to the controller.
f. Place jumpers from controller terminals, 4A to SAFC (Car Safety), and 4A to SAFH (Hoistway Safety), to bypass safety switches for the Car Buffer Test.
g. Turn on main power to the controller.

h. Navigate to:

Home

Install

Code Compliance Tests

Safeties Speed Tests

Car Buffer

ETS Bypass Option

Set **ETS Bypass Option** to **Yes**

Press the **Save** soft key to Save **ETS Bypass Option** selection or **Cancel** to abort test.

Press the **Run Test** soft key to start the **Car Buffer** test run or the **Back** soft key to abort test run.

CAUTION: Once the Run Test soft key has been pressed, the car will accelerate to contract speed in the down direction until the car strikes the car buffer. Once the car strikes the car buffer, flip the controller inspection switch to the INSP position to stop

i. Inspect the mechanical condition of the cab to ensure the car can be returned to service.

j. Using Controller Inspection, run the car up past the bottom landing door zone area. Remove all jumpers placed in item f above.

k. Reset ETS Bypass option, **ETS Bypass Option**, Set to **No**

l. Toggle the TEST switch to the off position and remove test weights from the car.

m. Set the CAPTURE switch to off, which will enable the car to service hall calls and return to Automatic Mode operation.

6.4.2 Intentionally Left Blank

6.4.3 Intentionally Left Blank

6.4.4 Terminal Stopping Devices (A17.1Section 3.25)

Pixel provides menu driven procedures to verify the operation of the Terminal (up and down) Stopping Devices as detailed in sections 6.4.4.1 and 6.4.4.2 below.

6.4.4.1 Terminal Speed-Reducing Devices (ASME 17.1 Section 3.25.2) "Emergency Terminal Stop test "

NOTE: This test verifies failure to reduce speed at terminal landing even do Landa position system is functioning properly.

The Emergency Terminal Stop test forces the car to run on high speed pass slowdown position into the up terminal landing to verify that even do the Landa Position system is working properly the car speed will be used by the safety processors to slow down the car and prevent the plunger from striking its solid limit of travel at a car speed in excess of 50 ft/min in the up direction, the tests is accomplished using the menu driven procedure below:

a. Set CAPTURE switch, located on the MP board, to CAPTURE which will prevent the car from servicing Hall Calls.

b. Drive the car to the bottom landing by entering a Car Call.

c. Set TEST switch, located on the MP board, to TEST which will enable Test Mode operation and disable door operation.

d. Navigate to:

Home

Install

Code Compliance Tests

Safeties Speed Tests

Emergency Terminal Stop

NOTE: The Emergency Terminal Stop parameter "Slowdown Position" represents the hoistway position at which the car must start its deceleration into the top landing (relative to the up normal limit position).

Press the **Run Test** soft key to start the **Emergency Terminal Stop** test run or the **Back** soft key to abort test run.

CAUTION: Once the Run Test soft key has been pressed, the car will accelerate to contract speed in the down direction and run past the Slowdown Position.

e. Observe that the Display shows a **Slowdown Overspeed** Trip latching fault, and that the car comes to a halt.

f. Press the System Fault Reset key to clear the fault and enable the car to re-level into the top landing.

g. Set place the TEST and CAPTURE switches to off, which will enable the car to accept hall calls and return to Automatic Mode operation.

NOTE: The Emergency Terminal Stop test can be performed for the down direction of travel to, if required to verify Pixel's ability to detect an overspeed in the down direction and stop the car.

6.4.4.2 Normal Terminal Stopping Devices (ASME17.1 Section 3.25.1) "NTS Slowdown Test"

NOTE: This test verifies failure of Normal means to slowdown the car into a terminal landing, Landa Main Sensor Head and Elevator microprocessor, using the safety microprocessors to declare a fault and allow the car to level with the floor utilizing Landa Auxiliary Sensor Head only.

The NTS Slowdown test forces the car to execute an emergency slowdown into a terminal landing (up or down) utilizing the Landa Auxiliary sensor head only to verify that the failure of the primary terminal slowdown device does not prevent the car from landing into terminal landing position, the test is accomplished using the menu driven procedure below:

a. Set CAPTURE switch, located on the MP board, to CAPTURE which will prevent the car from servicing Hall Calls.

b. Set TEST switch, located on the MP board, to TEST which will enable Test Mode operation and disable door operation.

c. Drive the car to a terminal landing by entering a Car Call.

d. Navigate to:

Home

Install

Code Compliance Tests

Safeties Speed Tests

NTS Slowdown Test

NOTE: The NTS Slowdown Test parameter "Slowdown Position" represents the hoistway position at which the car must start its deceleration into the bottom landing (relative to the virtual down normal limit).

Press the **Run Test** soft key to start the **NTS Slowdown Test** run or the **Back** soft key to abort test run.

CAUTION: Once the Run Test soft key has been pressed, the car will accelerate to contract speed in the down direction and run past the Slowdown Position.

e. Observe that the Selector 1 LED indicator on the MP board turns off, as cars travels beyond Slowdown Position indicating communications with Landa Main sensor Head have ceased.

f. Observe that the Display shows an **NTS Slowdown Overspeed** Trip latching fault, and that the car comes level to the bottom landing.

g. Press the System Fault Reset key to clear the fault and enable the car.

h. Verify Selector 1 LED on Pixel MP to go on indicating communications to Landa Main sensor head have been reestablished.

i. Set place the TEST and CAPTURE switches to off, which will enable the car to accept hall calls and return to Automatic Mode operation.

j. Repeat test for opposite direction of travel as required.

6.5 Overspeed Tests

The Pixel safety microprocessors monitor three different overspeed states, depending on elevator operational mode, and provide a menu driven interface to verify overspeed monitoring performance as follows:

6.5.1 Inspection Overspeed

Inspection Overspeed monitors cab speed during all four inspection modes of operation Car Top, In Car, Access, or Controller inspection. Use the following process for verification:

a. Set CAPTURE switch, located on the MP board, to CAPTURE which will prevent the car from servicing Hall Calls.

b. Set TEST switch, located on the MP board, to TEST which will enable Test Mode operation and disable door operation.

c. Place the car on Controller Inspection.

d. Navigate to:

Home

Install

Code Compliance Tests

Overspeed Tests

Inspection Overspeed

NOTE: The Inspection Overspeed display shows the programmed inspection speed parameter, overspeed tripping speed setting, and prompts for entry of the inspection tripping speed parameter to be use when running an inspection trip detection test. Enter a speed below the current inspection speed parameter setting before running the test.

Press the **Run Test** soft key to enable – for the next inspection run only – to detect **Inspection Overspeed** condition using the **Test Trip Speed** parameter or the **Back** soft key to abort test run.

e. Use the Machine Room Inspection switchgear, located on the MP board, to run the car up or down.

f. Observe that the Display shows an **Inspection Overspeed** Trip latching fault, and that the car comes to a halt.

g. Verify the car will not accept a command to run while the latched fault is present.

h. Press the System Fault Reset key to clear the fault and enable the enable the car to accept a command to move.

i. Toggle the MACHINE ROOM Inspection switch to NORMAL which will enable the car to re-level into the closest landing.

j. Set the TEST and CAPTURE switches to off, which will enable the car to service hall calls and return to Automatic Mode operation.

6.5.2 Leveling Overspeed

Leveling Overspeed monitors cab speed while the car is running within the door zone or trucking zone and is in the process of leveling into a landing. Use the following process for verification:

NOTE: Leveling Trip Speed does not monitor the target final programmed leveling speed. Pixel's car landing zone approach is normally greater than the final programmed leveling speed code permits speeds of up to 150 ft/min within the leveling zone.

a. Set CAPTURE switch, located on the MP board, to CAPTURE which will prevent the car from servicing Hall Calls.

b. Set TEST switch, located on the MP board, to TEST which will enable Test Mode operation and disable door operation.

c. Navigate to:

Home

Install

Code Compliance Tests

Overspeed Tests

Leveling Overspeed

NOTE: The Leveling Overspeed display shows the programmed Leveling speed parameter, overspeed tripping speed setting, and prompts for entry of the leveling tripping speed parameter to be use when running a leveling trip detection test. Enter a speed below the current leveling speed parameter setting before running test.

Press the **Run Test** soft key to enable – for the next leveling run only – to detect **Leveling Overspeed** condition using the **Test Leveling Overspeed** parameter or the **Back** soft key to abort test run.

d. Enter a Car Call to run the car.

e. Observe that the Fault Display entry for the safety processors shows a **Leveling Overspeed** latching fault as the car slows down into the target landing's door zone, and that the car comes to a halt.

f. Verify the car will not accept a command to run while the latched fault is present.

g. Press the System Fault Reset key to clear the fault and enable the enable the car to accept a command to move.

h. Verify that the car re-levels into the closest landing

i. Set place the TEST and CAPTURE switches to off, which will enable the car to accept hall calls and return to Automatic Mode operation.

6.5.3 Intentionally Left Blank

6.5.4 Contract Overspeed

Contract Overspeed monitors the cab speed while car is running on automatic mode use the following process for verification:

a. Set CAPTURE switch, located in the MP board, to CAPTURE to remove car from servicing Hall Calls.

b. Set TEST switch, located in the MP board, to TEST which will enable Test Mode operation and disable door operation.

c. Place a car call to a terminal landing to be able to run test.

d. Navigate to:

Home

Install

Code Compliance Tests

Overspeed Tests

Contract Overspeed

NOTE: The Contract Overspeed Speed display shows the programmed contract speed parameter, overspeed tripping setting, and prompts for entry of a tripping speed parameter to be used when running a Contract Overspeed speed trip detection test. Enter a speed below the current Contract Overspeed speed parameter setting before running test.

Press the **Run Test** soft key to enable – for the next automatic run only to detect **Contract Overspeed** condition using the **Tripping Speed** parameter or the **Back** soft key to abort test run.

e. Observe the display Fault entry for the safety processors to declare a latching **Contract Overspeed** fault and the car come to a halt.

f. Verify the car will not be commanded to run while the latched fault is present.

g. Press the System Fault Reset push button to clear fault and observe the car to re-level to its closest landing

h. Set the TEST and CAPTURE switches to off, which will enable the car to accept hall calls and return to Automatic Mode operation.

6.6 Valve High Pressure Relief Test (The Stop Ring Test)

This test allows the cab to run onto the jack system's stop ring to force the valve into high pressure relief. To perform test, a means of monitoring the hydraulic system pressure must be made available and visible while performing test.

CAUTION: While performing this test, monitor the system oil pressure to ensure that the pressure does not exceed the maximum limits of the hydraulic system.

To perform test:

a. Set CAPTURE switch, located in the MP board, to CAPTURE to remove car from servicing Hall Calls.

b. Set TEST switch, located in the MP board, to TEST which will enable Test Mode operation and disable door operation.

c. With the car on Automatic or Inspection, position the car at or near the top Landing

d. With the doors closed, place the car in Controller Inspection mode.

e. Set the car in Construction mode of operation navigate to:

Home

Install

Construction Mode

Press the Enable soft key to enable to place car in construction mode

f. Inch the car UP on Controller Inspection until the car contacts the stop ring. Once there, continue to inch the car up until the valve goes into pressure relief.

g. Note the oil pressure reading.

h. Run the car DOWN on Controller Inspection at or below the top floor landing.

i. Remove the car from Construction mode using the process on “e” above but now press the Disable soft key to exit construction mode.

j. Set CAPTURE switch, located in the MP board, to off to return car to servicing Hall Calls.

6.7 Down Overspeed

This test allows the car to run on Machine Room Inspection in the down direction in high speed to perform the Down Overspeed Safeties Test; follow the valve manufacturer’s instructions to adjust the down valves accordingly.

To perform this test follow instructions on Pixel LCD screen navigating to:

Home

Install

Code Compliance Tests

Overspeed Tests

Down Overspeed

CAUTION: After performing this test, verify the elevator safeties and overall installation to be safe before releasing elevator for service.

NOTE: The speed in ft/min at which the safeties trip will be displayed under the Safety Tripped At parameter to facilitate test performance verification.

6.8 Landa™ Redundant Position System Verification

Critical Component: **Landa**™ Main and Auxiliary Position Sensor Heads

Redundant Component: **Landa**™ Main and Auxiliary Position Sensor Heads

Monitored Component: Car Speed, and Position

NOTE: The following tests verify that Pixel can safely position the cab using either of the two independent sensor heads that comprise the Landa™ positioning system.

The Pixel control uses a dual head positioning system – Landa™– incorporating a positional encoded tape that runs the entire length of the hoistway. This system enables each either sensor head to provide absolute position information independent of the other. Refer to page 6 of the prints for Landa™ interface circuits.

The Main Positioning head communicates its absolute position to the main processor via dedicated RS485 serial port while the Auxiliary Positioning head communicates its absolute position to the main processor via CAN.

The Landa™ positioning system verifies absolute cab position to 0.032” (0.8mm) accuracy throughout the entire length of the hoistway.

The Pixel computer network, MPU, will “learn” and then build a positional image of the entire hoistway including:

- Door Zone or Trucking Zone, one per landing
- Top and Bottom Access Limits
- Mid hoistway position
- Physical open position for the top and bottom normal limit switches
- A speed profile deceleration ramp for the top and bottom landings

NOTE: The landing zones are limited to a maximum of six inches plus or minus learned position and are set at a factory default of three inches.

The learn process – once performed and verified during elevator installation – will be transferred and permanently stored by the three microprocessors that make up the Pixel controller’s main processing unit (MP, SP1, SP2). The learn process must be accomplished and transferred before the car can be run on any passenger automatic mode of operation.

NOTE: Pixel always “knows” the car position by reading it from the encoded tape and validating it through comparison to the learned/stored positional image.

Verification of Landa™ Main Sensor Head:

a. Set CAPTURE switch, located on the MP board, to CAPTURE which will prevent the car from responding to hall call demand.

b. Set TEST switch, located on the MP board, to TEST which will enable Test Mode operation and disable door operation.

c. Enter a car call to a floor several floors away from current car position (if this a two-stop elevator place a call to the other floor).

d. While car is running, unplug the Main Selector RJ45 cable labeled "SELECTOR" from Pixel MP, and observe that Pixel displays a **Main Selector Fault**, makes an emergency slowdown, and positions the elevator cab at the next available landing.

e. Pixel will remove the car from service until proper Landa™ Main sensor head communication is re-established.

f. Verify that the car will not respond to car calls.

g. Reconnect the RJ45 cable at the Pixel MP. Confirm that Pixel clears the **Main Selector Fault**, and that the car to respond to car call demand.

h. Return the CAPTURE and TEST switches to their off positions, which will enable the car to return to Automatic Mode of operation and serve hall call demand.

Verification of Landa™ Auxiliary Sensor Head:

a. Set CAPTURE switch, located on the MP board, to CAPTURE, which will prevent the car from responding to hall call demand.

b. Set TEST switch, located on the MP board, to TEST which will enable Test Mode operation and disable door operation.

c. Enter a car call to a floor several floors away from current car position (if this a two-stop elevator place a call to the other floor).

d. While car is running, unplug the cable labeled "CAB CAN" from the Pixel MP, and observe that Pixel displays **Aux. Selector Fault** makes an emergency slowdown and positions the elevator cab at the next available landing.

e. Pixel will remove the car from service until proper Landa™ Auxiliary sensor head communication is re-established.

f. Verify that the car will not respond to car calls.

g. Reconnect the RJ45 cable at the Pixel MP. Confirm that Pixel clears the **Aux. Selector Fault**, and that the car to respond to car call demand.

h. Return the CAPTURE and TEST switches to their off positions, which will enable the car to return to Automatic Mode of operation and serve hall call demand.

6.9 Monitoring Compliance Verification
Monitoring Critical Circuits ASME 17.1 Sections 2.26.9.3 and 2.26.9.4

6.9.1 EB1-EB2 and EBX1-EBX2 Relays Contacts

Critical Component:	EB1-EB2 and EBX1-EBX2 Relay Contacts
Redundant Component:	RG1-RG2 and RGBP1-RGBP2, SP1 and SP2 Computer Monitoring Inputs
Monitored Component:	EB1-EB2 and EBX1-EBX2 Relay Contacts

NOTE: Test verifies that Pixel can detect failure of Emergency Brake relay contacts to open and responds by preventing car motion. Refer to page 2 of prints for Emergency Brake circuits.

Set CAPTURE switch, located on the MP board, to CAPTURE which will prevent the car from responding to hall call demand.
Set TEST switch, located on the MP board, to TEST which will enable Test Mode operation and disable door operation.
Place Machine Room Inspection switch to INSP.

NOTE: EB1-EB2 and EBX1-EBX2 Relays Contacts Verification functions identically in both inspection and automatic modes of operation.

Momentarily short RG to RGBP inputs by using a jumper to bridge pin 3 to pin 4 on the PDB board at the JSMP harness connector.
Verify that the Pixel screen displays **EB Relay Fault** or **EBX Relays Fault**, the EB1-EB2 and EBX1-EBX2 relays are off, and the Emergency brake sets.
Verify that the car will not accept a run command while the fault is present.
Cycle power and confirm that the fault condition has not been cleared.
Press the ■ System Fault Reset button to clear the fault condition. Verify that either the EB1-EB2 or EBX1-EBX2 relays activate and that the car will accept a run command.
Set the TEST and CAPTURE switches to off, which will enable the car to accept hall calls and return to Automatic Mode operation.
Place Machine Room Inspection switch to NORMAL.

NOTE: Pixel alternates use of EB1-EB2 and EBX1-EBX2 relay contacts, that provide power to the emergency brake circuits, at the end of every run. Proper contact opening operation is verified prior to allowing the next run.

NOTE: Section 6.9.2 applies only for control units utilizing mechanical starters and section 6.9.3 only if mechanical starters are used in Wye-Delta configuration, skip to section 6.94 if control uses solid state starter.

6.9.2 AA Motor Contactor Force Guided Relay

Critical Component:	AA Relay
Redundant Component:	STOP1-STOP2, SP1 and SP2 Computer Monitoring Inputs
Monitored Component:	AA Relay Contacts

NOTE: Test confirms that Pixel correctly detects a motor contactor or solid state motor contactor pilot relay failure to open. Pixel checks for a stuck contact at the end of every run before allowing the next run. Refer to page 1and 4 of prints.

a. Set CAPTURE switch, located on the MP board, to CAPTURE which will prevent the car from responding to hall call demand.
b. Set TEST switch, located on the MP board, to TEST which will enable Test Mode operation and disable door operation.
c. Place Machine Room Inspection switch to INSP.

NOTE: AA Contactor Verification functions identically in both inspection and automatic modes of operation.

d. Manually press and hold the AA contactor, or AA solid state pilot force guided relay movable and verify that the Pixel screen displays **AA Relay Fault**. Then release and confirm that the fault condition has been cleared (screen displays **No Faults**).
e. While holding AA contactor movable, use Controller Inspection to command the car Up or Down.
f. Verify that the car will not accept a run command while the fault is present.
g. Release the AA contactor movable and confirm that the Pixel screen displays **No Faults**.
h. Return the Controller Inspection, TEST and CAPTURE switches to their off positions, which will enable the car to return to Automatic Mode of operation and serve call demand Place Machine Room Inspection switch to NORMAL.

6.9.3 P Potential Force Guided Relay (Y-Delta Starters Only)

Critical Component:	P Relay
Redundant Component:	Pin1-Pin2, SP1 and SP2 Computer Monitoring Inputs
Monitored Component:	P Relay Contacts

NOTE: Test confirms that Pixel correctly detects a P relay, “used as the Y starter”, failure to open. Pixel checks for a stuck contact at the end of every run before allowing the next run. refer to page 1 and 4 of prints. P contactor is one of two force-guided relays that provide power to the brake circuits.

a. Set CAPTURE switch, located on the MP board, to CAPTURE which will prevent the car from responding to hall call demand.
b. Set TEST switch, located on the MP board, to TEST, which will enable Test Mode operation and disable door operation.
c. Place Machine Room Inspection switch to INSP.

NOTE: P Relay Verification functions identically in both inspection and automatic modes of operation.

d. Manually press and hold the P relay movable and verify that the Pixel screen displays **P Relay Fault**. Then release and observe that the fault condition has been cleared (screen displays **No Faults**).
e. While holding P relay movable, use Machine Room Inspection to command the car Up or Down.
f. Verify that the car will not accept a run command while the fault is present.
g. Release the P contactor actuator and confirm that the Pixel screen displays **No Faults**.
h. Return the Controller Inspection, TEST and CAPTURE switches to their off positions, which will enable the car to return to Automatic Mode of operation and serve call demand.
i. Place Machine Room Inspection switch to NORMAL.

NOTE: Section 6.9.4 applies only for control units using auxiliary redundant mechanical starter, skip to section 6.94 if control does not use it.

6.9.4 BK Force Guided Relay (Redundant Mechanical Starter)

Critical Component:	BK Relay
Redundant Component:	BKI1-BKI2, SP1 and SP2 Computer Monitoring Inputs
Monitored Component:	BK Relay Contacts

NOTE: Test confirms that Pixel correctly detects a BK relay, used as redundant starter if required, failure to open. Pixel checks for a stuck contact at the end of every run before allowing the next run. Refer to page 1 and 4 of prints.

a. Set CAPTURE switch, located on the MP board, to CAPTURE which will prevent the car from responding to hall call demand.

b. Set TEST switch, located on the MP board, to TEST, which will enable Test Mode operation and disable door operation.
c. Place Machine Room Inspection switch to INSP.

NOTE: BK Relay Verification functions identically in both inspection and automatic modes of operation.

d. Manually press and hold the BK relay movable and verify that the Pixel screen displays **BK Relay Fault**. Then release and observe that the fault condition has been cleared (screen displays **No Faults**).
e. While holding BK relay movable, use Machine Room Inspection to command the car Up or Down.
f. Verify that the car will not accept a run command while the fault is present.
g. Release the BK contactor actuator and confirm that the Pixel screen displays **No Faults.**
h. Return the Controller Inspection, TEST and CAPTURE switches to their off positions, which will enable the car to return to Automatic Mode of operation and serve call demand.
i. Place Machine Room Inspection switch to NORMAL.

6.9.5 Hoistway & Car Door Bypass Switches

Critical Component:	Hoistway and Car Door Bypass Switches
Redundant Component:	HDB1-HDB2 and CDB1-CDB2, and SP1 and SP2 Computer Monitoring Inputs
Monitored Component:	Hall and Car Door Bypass Switches

NOTE: This test verifies that Pixel will only allow the car to operate in Cartop or In Car Inspection modes under the following conditions: (1) Hoistway bypass switch is on BYPASS; (2) Car Door Bypass switch is on BYPASS; (3) both are on BYPASS.

Hoistway Door Bypass Switch:

a. While the car is on Automatic Mode of Operation, place the **Hoistway Door Bypass** switch to the BYPASS position.
b. Confirm that the Pixel screen displays **Inspection Mode** and also a **Hall Door Bypass w/o Inspection fault**.
c. Verify that the car will not respond to a car or hall call demand and will not move in Controller or Access inspection modes.
d. Place the controller on **Cartop Inspection** and verify that the car will respond to an up or down cartop inspection command with any hoistway door in the not fully closed position.

e. With a hoistway door still in the not fully closed position, place the **Hoistway Door Bypass** switch to OFF position. Verify that the car will not respond to an up or down cartop inspection command.

f. Fully close the test door. Verify that the car will now respond to an up or down cartop inspection command.

Car Door Bypass Switch:

a. While the car is on Automatic Mode of Operation, place the **Car Door Bypass** switch to the BYPASS position.

b. Confirm that the Pixel screen displays **Inspection Mode** and a **Car Door Bypass w/o Inspection fault**.

c. Verify that the car will not respond to a car or hall call demand and will not move in Controller or Access inspection modes.

d. Place the controller on **Cartop Inspection** and verify that the car will respond to an up or down cartop inspection command with the car door in the not fully closed position.

e. With the car door still in the not fully closed position, place the **Car Door Bypass** switch to OFF position. Verify that the car will not respond to an up or down cartop inspection command.

f. Fully close the car door. Verify that the car will now respond to an up or down cartop inspection command.

Hoistway and Car Door Bypass Switches:

a. While the car is on Automatic Mode of Operation, place the **Hoistway and Car Door Bypass** switches to the BYPASS position.

b. Confirm that the Pixel screen displays **Inspection Mode** and also a **Hoistway Door Bypass w/o Inspection fault**.

c. Verify that the car will not respond to a car or hall call demand and will not move in Controller or Access inspection modes.

d. Place the controller on **Cartop Inspection** and verify that the car will respond to an up or down cartop inspection command with any hoistway and car door in the not fully closed position.

e. With any hoistway and car door still in the not fully closed position, place the **Car Door Bypass** switch to OFF position. Verify that the car will not respond to an up or down cartop inspection command.

f. Fully close the hoistway doors and car door. Verify that the car will now respond to an up or down cartop inspection command.

NOTE: Referring to page MP of job prints, observe that both Hoistway and Car Door Bypass switches are being monitored on the Normally Open and The Normally Closed sides of their respective contacts. If the input state of

SP1 and SP2 are not opposite, a **Car Door Bypass System Fault** or **Hoistway Door Bypass System Fault** will be displayed on the Pixel screen and the car will be prevented from moving.

6.9.6 Detection of Jumpers on Door Safety String (DLM)

Critical Component:	Car Gate and Hoistway Door Locks Redundant Component: SP1 and SP2 computer Monitoring Inputs
Monitored Inputs:	**Front Doors:** CGF1-CGF2, DLAT1-DLAT2, DLSF1-DLSF2, DLAB1-DLAB2 Additional inputs for front and rear doors **Rear Doors:** CGR1-CGR2, DLSR1-DLSR2,

NOTE: Test verifies that Pixel will detect jumpers placed on the door safety string and prevent doors from closing and any car movement. Refer to page 4 of the prints for job required door safety string inputs.

a. Place the car on Independent Service and run the car to the bottom landing. Car will automatically open the doors.
b. Place a jumper from 4A to CGF. Confirm that the Pixel screen displays Door Lock System Fault.
c. Verify that the car will not respond to a car call demand.
d. Remove jumper from 4A to CGF. Confirm that the Pixel screen displays No Faults.
e. Place a jumper from 4A to DLAB. Confirm that the Pixel screen with displays Door Lock System Fault.
f. Verify that the car will not respond to a car call demand.
g. Remove jumper from 4A to DLAB. Confirm that the Pixel screen displays No Faults.
h. Run the car to an intermediate landing.
i. Place a jumper from 4A to DLSF. Confirm that the Pixel screen displays Door Lock System Fault.
j. Verify that the car will not respond to a car call demand.
k. Remove jumper from 4A to DLSF. Confirm that the Pixel screen displays No Faults.
l. Run the car to the top landing.
m. Place a Jumper from 4A to DLAT. Confirm that the Pixel screen displays Door Lock System Fault.
n. Verify that the car will not respond to a car call demand.

o. Remove Jumper from 4A to DLAT. Confirm that the Pixel screen displays No Faults.

NOTE: Skip to step w below if car has no rear doors.

p. Run the car to a rear door landing and open the rear doors.

q. Place a jumper from 4A to CGR. Confirm that the Pixel screen displays Door Lock System Fault.

r. Verify that the car will not respond to a car call demand.

s. Remove jumper from 4A to CGR. Confirm that the Pixel screen displays No Faults.

t. Place a jumper from 4A to DLSR. Confirm that the Pixel screen displays Door Lock System Fault.

u. Verify that the car will not respond to a car call demand.

v. Remove jumper from 4A to DLSR. Confirm that the Pixel screen displays No Fault

w. Release car from Independent service.

6.9.7 Door Open and Close Simultaneously

Critical Component:	Door Open & Door Close Limits
Redundant Component:	DOL and DCL Computer Monitoring Inputs
Monitored Component:	Door Opened & Door Close Limits

NOTE: Test verifies that Pixel will detect a condition where the door open and door close limit switches are opened simultaneously.

a. Call the car to the closest landing to the machine room and place it in Independent service, to command it to open the doors

b. Place the Capture switch to Capture and the Car Door and Hoistway Door Bypass switches to Bypass on Pixel MP board

c. Gain access to the top of the car and place it on Car Top inspection.

d. Turn main power to the controller off.

e. Remove and isolate the wire from the DCLF terminal on the P-TOC board.

f. Remove the car from Car Top Inspection and place the Hoistway Door Bypass switches on Pixel MP board to off position

g. Turn main power to the controller on, car will proceed to close its doors and to reposition to the closest landing and open the doors.

h. Confirm that the Pixel screen displays **Front Door Limit Switches Fault**.

i. Verify that doors will not close by pressing the door close button in the COP.

j. Place the car on Cartop Inspection.

k. Reconnect wire to the DCLF terminal.

l. Remove car from Cartop Inspection. Confirm that the Pixel screen displays **No Faults**.

m. Remove Car from Independent Service. Confirm that doors operate normally.

NOTE: Repeat for rear doors if car has front and rear door operation. Use DCLR and DOLR in place of DOLF and DCLF to perform steps above.

6.9.8 Valves Latched Direction

6.9.8.1 U Relay Contact 1

Critical Component:	U relay contact 1 normally open
Redundant Component:	URM1-URM2, SP1 and SP2 Computer Monitoring Inputs
Monitored Component:	U relay contact 1 normally open

NOTE: Test confirms that Pixel correctly detects an up contact 1 relay failure to open possible leaving the up low speed directional valve on. Pixel checks for a stuck contact at the end of every run before allowing the next run. Refer to page 1 of prints.

a. Set CAPTURE switch, located on the MP board, to CAPTURE which will prevent the car from responding to hall call demand.

b. Set TEST switch, located on the MP board, to TEST, which will enable Test Mode operation and disable door operation.

c. Place Machine Room Inspection switch to INSP.

NOTE: U Relay contact 1 Verification functions identically in both inspection and automatic modes of operation.

d. Manually close the U relay using the relay manual levering flap, observe the Pixel screen displays U Relay Fault and drops EB1-EB1X- EBX1-EBX2 relays removing power from the valve's circuits and starter units.

e. Release manual levering flap and observe that the fault condition remains

f. Verify that the car will not accept a run command while the fault is present.

g. Cycle power and confirm that the fault condition has not been cleared.

h. Press the ■ System Fault Reset button to clear the fault condition. Verify that either the EB1-EB2 or EBX1-EBX2 relays activate and that the car will accept a run command.

i. Set the TEST and CAPTURE switches to off, which will enable the car to accept hall calls and return to Automatic Mode operation.

j. Place Machine Room Inspection switch to NORMAL.

6.9.8.2 D Relay Contact 1

Critical Component: D relay contact 1 normally open

Redundant Component: DRM1-DRM2, SP1 and SP2 Computer Monitoring Inputs

Monitored Component: D relay contact 1 normally open

NOTE: Test confirms that Pixel correctly detects a down contact 1 relay failure to open possible leaving the down low speed directional valve on. Pixel checks for a stuck contact at the end of every run before allowing the next run. Refer to page 1 of prints.

a. Set CAPTURE switch, located on the MP board, to CAPTURE which will prevent the car from responding to hall call demand.

b. Set TEST switch, located on the MP board, to TEST, which will enable Test Mode operation and disable door operation.

c. Place Machine Room Inspection switch to INSP.

NOTE: D Relay contact 1 Verification functions identically in both inspection and automatic modes of operation.

d. Manually close the D relay using the relay manual levering flap, observe the Pixel screen displays D Relay Fault and drops EB1-EB1X- EBX1-EBX2 relays removing power from the valve's circuits and starter units.

e. Release manual levering flap and observe that the fault condition remains

f. Verify that the car will not accept a run command while the fault is present.

g. Cycle power and confirm that the fault condition has not been cleared.

h. Press the ■ System Fault Reset button to clear the fault condition. Verify that either the EB1-EB2 or EBX1-EBX2 relays activate and that the car will accept a run command.

i. Set the TEST and CAPTURE switches to off, which will enable the car to accept hall calls and return to Automatic Mode operation.

j. Place Machine Room Inspection switch to NORMAL.

6.9.9 Single Ground

Critical Component: N/A

Redundant Component: F4A Fuse

Monitored Component: N/A

Test Verification of Single Ground:

a. Place the car on Machine Room Inspection.

NOTE: The Single Ground Test can be performed on either automatic or inspection operation.

NOTE: The system logic is driven by a source of 110 Volts AC, and has one side already connected to ground, the 3 buss. The other side, the 4A buss, is protected by a fuse feeding the logic power. Any accidental grounding will result in a blown fuse F4A, which will remove controller power to the safety string and logic circuits.

b. Short terminal SAFH to ground. Verify that fuse F4A blows, and the Pixel screen displays **Safety String Open Fault**.

c. Turn main power to controller off.

d. Replace fuse F4A.

e. Turn main power to controller on.

f. Confirm that the Pixel screen displays **No Faults**.

g. Remove the car from Machine Room Inspection.

6.9.10 Permit Car Speeds Over 150 fpm

ASME 2.26.9.3.c except 2.26.1.5.10(b)

Critical Component: **Landa**™ Main and Auxiliary Selectors

Redundant Component: **Landa**™ Main and Auxiliary Selectors

Monitored Component: Car Speed

NOTE: Refer to Section 6.6, Landa™ Redundant Position System Verification, for verification of the speed and position feedback system.

NOTE: Refer to Section 6.3.1, Inspection Overspeed and 6.3.2 Leveling Overspeed, for verification of inspection and leveling overspeed.

6.9.11 Governor Test

There are three components to be verified to confirm proper operation of the Governor device and controller interface circuits. They are the Governor Overspeed Electrical contact, the Governor inputs to the safety processors, and the Governor set trip speed. Follow procedure below to verify operation:

Governor Electrical Contact and GOV Inputs to Safety Microprocessors:

NOTE: Refer to page 3 of prints for the Governor Interface circuits.

a. Set CAPTURE switch, located on the MP board, to CAPTURE to prevent the car from responding to hall call demand.

b. Set TEST switch, located on the MP board, to TEST which will enable Test Mode operation and disable door operation.

c. Manually momentarily trip and reset the governor overspeed switch, then verify that the following occurs:

- Pixel screen displays **Governor Latching Fault**
- Relays EB1-EB2, EBX1-EBX2, located in the PDB board drop, removing power to the valve's circuits, refer to page 1 of the prints.
- The car cannot be commanded to run.
- Cycle power and confirm that the fault condition has not been cleared.

d. Press the ■**System Fault Reset** button to clear the fault condition and pick the EB1-EB2 or EBX1-EBX2 relays, connecting power to the valve's circuits.

Governor Device Operation Verification:

a. Set Machine Room Inspection switch, located on the MP board, to INSP.

b. Follow the Governor manufacturer's instructions to trip the governor.

c. Once the Governor trips verify that the following occurs:

- Pixel screen displays **Governor Latching Fault**
- Relays EB1-EB2, EBX1-EBX2, located in the PDB board drop, removing power to the valve's circuits, refer to page 1 of the prints.
- The car cannot be commanded to run.
- Cycle power and confirm that the fault condition has not been cleared.

d. Press the ■**System Fault Reset** button to clear the fault condition and pick the EB1-EB2 or EBX1-EBX2 relays, connecting power to the valve's circuits.

Section 7 – Troubleshooting

The Elevator Controls Microprocessor Controller is the most reliable part of any elevator system. While problems are possible, the most efficient troubleshooting approach is to first look to the "outside world" for the source of malfunctions that most frequently take elevators out of service.

7.1 General Troubleshooting Tips.

Pixel controller is equipped with multiple indicators designed to help troubleshoot at a glance; significant time and frustration can be avoided by simply paying attention to the indicators on the MP and P-I/O boards.

7.2 General Checklist

a. The Pixel home screen always displays the most prominent fault preventing the car from Automatic operation.

NOTE: If an active fault is displayed, pressing the **HELP** button will display the fault help screen and possible corrective action. Refer to section 7.3 below for example of fault and HELP diagnostics navigation.

b. Verify that each power control step-down transformer has the correct input and output voltages (refer to job prints page 2 for terminal and fuse numbers). Replace fuses as necessary.

c. Verify that the 24 VDC power supply module green LED is illuminated, and that voltage output is within 10 % tolerance. If not, check the following:

   i. Verify input power to the power supply.
   ii. Check the power supply input switch setting, set per job prints page 2.
   iii. Verify that fuses FSP1 and FSP2 are good.

d. Check voltage between terminals 4A and 3 to confirm approximately 110 VAC.

e. Check voltage between terminals 6 and 3; 50 and 3; and 50F and 3. Confirm approximately 24 VDC. If any of the above power supply voltages are not within range, check the appropriate fuses.

NOTE: System common is the 3 buss (normally terminal 3 is connected to chassis ground). Unless otherwise noted, all DC voltages are measured with respect to Terminal 3.

NOTE: Refer to Appendix D for complete list of mnemonic descriptions.

NOTE: Refer to Section 7.4, Pixel Fault Listing Table, for a complete list of Help Menu fault entries with expanded Possible Causes/ Solutions.

7.3 Fault Help Menu Navigation Example

Pixel recognizes over two hundred faults. All faults can be resolved using the same method. The example below illustrates the use of the HELP menu in correcting a Car Safety String Open fault.

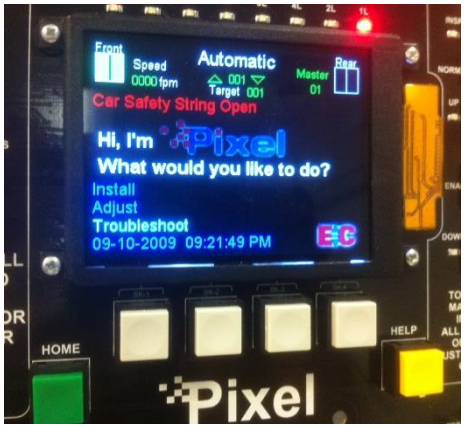

Pixel home screen displays **Car Safety String Open** Fault (shown in red).

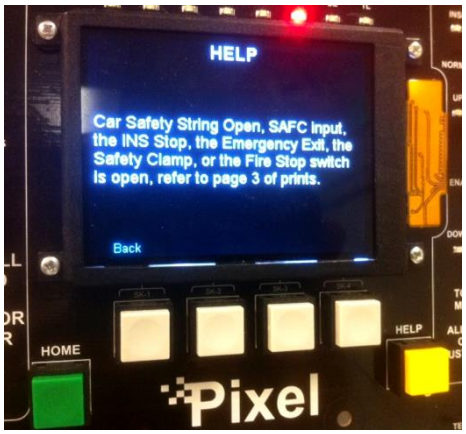

Press the yellow **HELP** button and details about how to resolve the fault are displayed.

NOTE: Every fault Pixel declares follows the same display and HELP menu format.

7.3.1 Troubleshooting Example

Continuing with the **Car Safety String Open** fault from above, use the help menu instructions to troubleshoot and correct fault per the example below:

a. Verify the SAFC input LED, located on the P-I/O, board is not illuminated; indicating that SAFC input voltage is missing.

b. Open the job prints, page 3, as indicated by the HELP menu.

c. Verify that power between terminals 3 and 4A is approximately 120 VAC. For example, consider that voltage measured is within range. Power supply voltage troubleshooting is covered in Section 7.2 above, General Check List.

d. Verify that power between terminals 3 and SAFC is not present.

e. Verify that the COP Fire Panel Stop Switch is closed, and power between terminals 3 to 20B is approximately 120 VAC inside the COP. For example, the Fire Panel Stop Switch is closed, and the voltage measured is within range.

f. Access the top of the car and place the car on Cartop Inspection mode.

g. Verify that the power between terminals 3 and 20B at the TOC terminal strip is approximately 120 VAC.

h. Determine which device is open between terminals 20B and SAFC in the TOC terminal strip. Correct as required.

i. Verify power between terminals 3 and SAFC is approximately 120 VAC on the TOC terminal strip.

j. Verify voltage at the controller traveler terminal strip SAFC and SAFC LED is illuminated on the P-I/O board.

k. Press **HOME** to return to Pixel main menu and verify fault has cleared.

NOTE: Some faults are latching and require that the **RESET** System Fault Reset button be pressed to clear fault after it is no longer present. Refer to Table 7.3.1 below for a list of latching faults requiring manual reset.

l. If another fault is displayed, follow steps 1 to 11 above to correct and return the car to service.

Latching Fault Table 7.3.1

Table 7.3.1 Latching Faults Table	Traction	Hydraulic
1. Unintended Movement	Yes	N/A
2. Governor Switch Open	Yes	Yes
3. EB1-EB2 Relays Fault	Yes	Yes
4. EBX1-EBX2 Relays Fault	Yes	Yes
5. Inspection Overspeed	Yes	Yes
6. Slowdown Overspeed	Yes	Yes
7. Earthquake Overspeed	Yes	Yes
8. Leveling Overspeed	Yes	Yes
9. Highspeed Overspeed	Yes	Yes
10. Motor Limit Timeout	Yes	Yes
11. Pit Flood	No	Yes
12. U Relay Fault	No	Yes
13. D Relay Fault	No	Yes

14. Brake Did Not Lift	Yes	N/A
15. I2C Bus Error	Yes	Yes
16. Opposite Direction Motion	Yes	N/A
17. Following Error/Traction Loss	Yes	N/A
18. Front PHE Cycle Test Failed	Yes	Yes
19. Rear PHE Cycle Test Failed	Yes	Yes
20. Low Oil Input Active	N/A	Yes
21. Hot Oil Input Active	N/A	Yes
22. Drive Speed Regulator Fault	Yes	N/A
23. Broken Suspension Detected	Yes	N/A
24. Plunger Input Active	N/A	Yes
25. Cycle Test Failed	Yes	Yes

7.4 Pixel Fault Listing Table

The Pixel Fault Listing is intended to provide an explanation of the event conditions that may be generated by Pixel controller and to empower the troubleshooter with a better understanding of each event to expedite corrective actions.

NOTE: Faults are listed in alphabetical order.

NOTE: Under the Fault Message column, the message description portion in () parenthesis is for Pixel software versions 3.0.3.xx and prior.

NOTE: Under the Event Message column, the message description portion in { } curly brackets is used to provide an explanation about the XX portion of the event message and will not be displayed as part of the event message

Fault Message	Description	Logical Conditions	Possible Causes/ Solutions
AA Contactor/STOP Input	The AAo Motor Contactor output state is off but its monitored contact did not close or AAo state is on but its monitored contact did not Open, AA Contactor failed to pick, drop or it has a bad Auxiliary Contact, verify contact(s) wired to the STOP input and AAo contactor output triacs; refer to page 4 of prints.	TRACTION AAo = 1 STOP = 1 OR AAo = 0 STOP = 0 HYDRO w/Contactor Proof Option SU = 0 SD = 0 AAo = 0 STOP = 0 HYDRO w/o Contactor Proof Option AAo = 0 STOP = 0	• Verify the AA Auxiliary Contacts are properly seated • Manually actuate the AA motor contactor and observe the STOP input Led on the P-MPIO board turns off as contactor is pressed and turns on when released. • Verify the operation of the STOP input on the P-MPIO Board – Navigate to Troubleshoot→Flags →Safety I/O Flags and observe the STOP flag changing states in memory when the AA motor contactor is manually actuated. • If the STOP flag doesn't change state in memory, but it does change state on the P-MPIO status LED– Replace the P-MPIO Board • If STOP flag does change state in memory and it matches the LED status – Navigate to Troubleshoot→Flags →Safety I/O Flags observe the AAo output flag to match the AAo output status LED on the P-MPIO, if it does not replace AAo output triacs Q4 and Q5 on the P-MPIO Board and repeat this step. • If step above did not fix the problem, Replace the P-MPIO Board
Aux Cedes Checksum Error	CEDES APS Sensor response fails the Pixel Checksum Integrity Check. Verify the connection from the device to P-TOC is correct; refer to page 6CEDES APS of the prints.		• Verify the connection between the CEDES APS Sensor and the P-TOC board is correct. Refer to page 6CEDES APS of the prints. • After verifying the connection is correct, interchange the Main and Auxiliary connection on the CEDES APSC and confirm on the View Selector Data Window (Install→View Selector Data) that the fault is now displayed on the Main data. • If the fault does not move to the Main device, then replace the Auxiliary Cedes P-HNA board. • If the fault does move to the Main device, replace the CEDES APS Sensor.

Fault Message	Description	Logical Conditions	Possible Causes/ Solutions
Aux Cedes Unit Position Error	CEDES APS Sensor cannot read the code tape correctly. Clean the optical window, code tape, and verify the alignment of sensor with the code tape.		• Clean the optical window on the CEDES APS Sensor device. • Clean the coded tape from any dust or grease. • Verify the alignment of the device is centered to the coded tape. Be sure to use the position indicators on the device to verify alignment, refer to Appendix E of Controller manual. • If the fault does not clear, replace the CEDES APS Sensor device
Aux Landa Unit Bad Integrity Data	Bad/Corrupted data packets from the Auxiliary Landa unit are being received.		• Verify the wiring of the Auxiliary Landa Sensor Unit for data and shield wires. Refer to page 6b of the prints. • Replace Auxiliary Landa wire harness to the TOC and verify operation, continue with steps below if problem persist. • Replace Auxiliary Landa Sensor Unit and verify operation, continue with step below if problem persist • Replace P-TOC board
Aux Landa Unit Completely Off Rail	The Landa Tape is not aligned inside the Auxiliary Landa sensor unit; refer to page QR5 of the prints for tape installation directions.		• Auxiliary Landa Sensor Unit is misaligned and is unable to read positional data. Verify Auxiliary Landa Sensor Unit alignment. • Ensure that the tape is straight though the entire length of the hoistway and that is braced at appropriate intervals to prevent excessive drift. • Navigate to Install→View Selector Data Window and verify the Landa tape alignment while running on Inspection the entire length of the hoistway. If properly align replace the Auxiliary Landa Sensor Unit, refer to page QR5 of the prints for tape installation directions.
Aux Landa Unit has Invalid Data	Auxiliary Landa Sensor unit is constantly reading a position of 0.00ft, Refer to page QR5 of the prints for Landa tape installation directions.		• Navigate to Install→View Selector Data Window and verify if the Auxiliary Landa sensor unit reads a position of 0.00ft • If the position is 0.00ft, verify that the Landa tape is installed properly by ensuring that the arrows on the Landa tape are pointing in the UP direction. • If pointing down Landa tape is hanging upside down and needs to be flipped. • If arrows are located to run inside sensor unit, tape is backwards and needs to be turned. i.e. arrows need to be away from sensor unit reading area, refer to page QR5 of the prints for tape installation directions.

Fault Message	Description	Logical Conditions	Possible Causes/ Solutions
Aux Landa Unit Can't Read Pos. A Or Can't Read Pos. B (Pos. A: Aux Landa Unit Lost 1) or (Pos. B: Aux Landa Unit Lost 2)	Auxiliary Landa Sensor Unit cannot calculate the current position, clean sensor unit reading area and verify it is free from scratches, if scratched replace sensor unit.		• Clean the optical unit of any possible dirt. • Verify the direction of reading relative to code rail is correct • Verify the wire harness connection between the Landa unit and the P-TOC board is secured tightly • Verify that the plastic liner is not scratched; if it is then the unit must be replaced.
Aux Landa Unit Partially Off Rail	The Landa Tape is partially misaligned inside of the Auxiliary Landa Sensor unit; refer to page QR5 of the prints for tape installation directions.		• Auxiliary Landa Sensor units partially misaligned and is unable to read positional data. Verify the Auxiliary Landa Sensor unit alignment. • Ensure that the tape is straight though the entire length of the hoistway and that is braced at appropriate intervals to prevent excessive drift. Refer to page QR5 of the prints for tape installation directions. • Navigate to Install→View Selector Data Window and verify the Landa alignment while running on Inspection the entire length of the hoistway. If properly aligned replace the Auxiliary Landa Sensor unit
Aux Landa Unit Checksum Error (Aux Landa Unit Read Data Error)	The CRC of the data packet did not match the calculated CRC; Bad/Corrupted data packets from the Auxiliary Landa Unit are being received.		• Verify the wiring of the Auxiliary Landa Sensor unit for data and shield wires. Refer to Page 6b of the prints. • Replace Auxiliary Landa wire harness to the TOC and verify operation, continue with steps below if problem persist. • Replace Auxiliary Landa Sensor unit and verify operation, continue with step below if problem persist • Replace P-TOC board

Fault Message	Description	Logical Conditions	Possible Causes/ Solutions
Battery Lowering	The building power has failed and the battery power to lower the elevator and let passengers out has been engaged, the Battery Lowering input BPL is active; refer to pages 1 & 5 of the prints	BPL = 1	• If building power is not available the behavior is correct, wait for building power service to be reestablished. • If building power is available verify power fed to the controller matches job requirements, refer to page 1 of the prints. • Verify battery lowering unit is operating properly, refer to Pages. 1 & 5 of prints. BPL input should be wired to a normally open contact. • Verify that BPL input is not active, voltage is not present on BPL terminal, if active refer to battery lowering unit manual to determine and correct input activation behavior. • If not active, BPL IO input may have failed, verify BPL input IO Mapping matches its terminal assignment • If it matches, verify that the input state matches in Local Diagnostics. Navigate to Troubleshoot → Local Diagnostics, and then select the board BPL is mapped on. • If it does not match, try reassigning BPL input to a different IO input or replace the board if no spare available IO inputs available. I/O mapping navigate to:(Install→I/O Mapping→ select board and BPL input location)
BK Contactor Fault	The BKo Brake contactor output state is off but its monitored contact did not close. BK Contactor failed to drop, or it has a bad Auxiliary Contact, verify contact(s) wired to the BKi input and BKo contactor output triac; refer to page 4 of prints.	BK = 0 BKi = 0	• Verify Mechanical Operation of BK contactor and its Auxiliary contacts • Manually actuate the BK contactor and observe the BKI input Led on the P-MPIO board turns off as contactor is pressed and turns on when released. • Verify the operation of the BKi input on the P-MPIO Board – Navigate to Troubleshoot→Flags →Safety I/O Flags and observe the BKi flag changing states in memory when the BK motor contactor is manually actuated, if the BKi flag doesn't change state in memory, but it does change state on the P-MPIO status LED – Replace the P-MPIO Board. • If BKi flag does change state in memory Navigate to Troubleshoot→Flags →Safety I/O Flags observe the BKo output flag matches the output status LED on the P-MPIO board, if it does not match replace BKo output triacs Q1_05 on the P-MPIO Board and repeat this step. • If step above did not fix the problem, Replace the P-MPIO Board

Fault Message	Description	Logical Conditions	Possible Causes/ Solutions
Both Landa Units Bad Integrity Data	Bad/Corrupted data packets from both Main and Auxiliary Landa Unit are being received		• Verify the wiring for both Main and Auxiliary Landa Sensor units for data and shield wires. Refer to Page 6b of the prints. • Replace Main and Auxiliary Landa Sensor units wire harnesses to the TOC and verify operation, continue with steps below if problem persist. • Replace Main and Auxiliary Landa Sensor units and verify operation, continue with step below if problem persist • Replace P-TOC board
Both Landa Units Completely Off Rail	The Landa Tape is not aligned inside the sensor units; refer to page QR5 of the prints for tape installation directions.		• Main and Auxiliary Landa Sensor units are misaligned and are unable to read positional data. Verify Main and Auxiliary Landa Sensor unit alignment. Refer to page QR5 of the prints for Landa installation directions. • Ensure that the tape is straight though the entire length of the hoistway and that is braced at appropriate intervals to prevent excessive drift. • Navigate to Install→View Selector Data Window and verify the Landa tape alignment while running on Inspection the entire length of the hoistway. If properly align replace Main and Auxiliary Landa Sensor units.
Both Landa Units Have Invalid Data	Both Main and Auxiliary Landa Sensor units are constantly reading a position of 0.00ft, Refer to page QR5 of the prints for Landa tape installation directions.		• Navigate to Install→View Selector Data Window and verify Main and Auxiliary Landa sensor unit read a position of 0.00ft • If the position is 0.00ft, verify that the Landa tape is installed properly by ensuring that the arrows on the Landa tape are pointing in the UP direction • If pointing down Landa tape is hanging upside down and needs to be flipped • If arrows are located to run inside sensor unit tape is backwards and needs to be turned, i.e. arrows need to be away from sensor unit reading area, refer to page QR5 of the prints for tape installation directions.
Both Landa Units Can't Read Pos. A Or Can't Read Pos. B (Pos. A: Both Landa Unit Lost 1) or (Pos. B: Both Landa Unit Lost 2)	Main and Auxiliary Landa Sensor Unit cannot calculate the current position, clean sensor units reading area and verify it is free from scratches, if scratched replace sensor unit(s).		• Clean the optical units of any possible dirt. • Verify the direction of reading relative to code rail is correct • Verify the wire harness connection between the Landa unit and the P-TOC board is secured tightly • Verify that the plastic liner is not scratched; if it is then the unit(s) must be replaced.

Fault Message	Description	Logical Conditions	Possible Causes/ Solutions
Both Landa Units Partially Off Rail	The Landa Tape is partially misaligned inside the Main and Auxiliary Landa Sensor units; refer to page QR5 of the prints for tape installation directions.		• Main and Auxiliary Landa Sensor units are partially misaligned and are unable to read positional data. Verify Main and Auxiliary Landa Sensor unit alignment. • Ensure that the tape is straight though the entire length of the hoistway and that is braced at appropriate intervals to prevent excessive drift, refer to page QR5 of the prints for tape installation directions. • Navigate to Install→View Selector Data Window and verify the Landa alignment while running on Inspection the entire length of the hoistway. If properly aligned replace the Main and Auxiliary Landa Sensor units
Both Landa Units Checksum Error (Both Landa Units Read Data Error)	The CRC of the data packet did not match the calculated CRC; Bad/Corrupted data packets from Main and Auxiliary Landa Units are being received.		• Verify the wiring of the Main and Auxiliary Landa Sensor units for data and shield wires. Refer to Page 6b of the prints. • Replace Main and Auxiliary Landa wire harness to the TOC and verify operation, continue with steps below if problem persist. • Replace Main and Auxiliary Landa Sensor units and verify operation, continue with step below if problem persist • Replace P-TOC board
CAB Comm. Failed	Unable to establish CAN communication between the P-MP and any of the Cab Nodes (P-TOC, P-COP or P-CNEX). Refer to Pages. 6 & 8 of the prints		• Verify traveler wiring from controller to TOC and from the TOC to COP(s), refer to Pages. 6 & 8 of the prints • Verify COP(s) configuration node ID SW2 switch settings refer to Page 8 of the prints • Verify CAB network to make sure all expected boards are being accounted by Pixel navigate to →Install →Learn Functions→Car Network Landscape • Verify CAB Network Status Good versus Bad counts. Navigate to Troubleshoot→Controller Network→Car CAN Network
Car Call Disconnect Tripped	The Car Call Disconnect function has been tripped causing all car calls to be dropped, refer to statistics counter window for the trigger code.	CCD = 1	• Navigate to Troubleshoot→Statistic Counters→CCD Trigger Code • Use the trigger code to guide you on seeking a solution.

Fault Message	Description	Logical Conditions	Possible Causes/ Solutions
Car Door Bypass Switch	SP1 and SP2CDB1 and CDB2 inputs are both on or both off simultaneously, Pixel monitors both sides of the switch status for. Refer to Page3 of prints	CDB1 = 1 CDB2 = 1 OR CDB1 = 0 CDB2 = 0	• Navigate to Troubleshoot → Flags → Inspection Flags and make sure that CDB is either black or blue • Verify the communication status for SP1 and SP2 by navigating to Troubleshoot → Controller Network → (SP1) and (SP2) • If the SP1 and SP2 processors still read the same status and are communicating correctly – Replace the P-MP Board; the switch may have failed. If they are not communicating correctly – Replace both the P-MP and P-MPIO Boards
Car Door Bypass w/o Inspection	The Car Door Bypass switch is active while the car is not on Car Top inspection or In Car inspection	ICT = 1 IIC = 1 CDB = 1	• Car door bypass switch cannot be active while the controller is not on either car top or in car inspection – Turn off Car Door Bypass switch • If the car door bypass switch is off – verify that the switch is off in memory. Navigate to Troubleshoot → Flags → Inspection Flags and look at the status of CDB. The flag is low if the switch is off and high if the switch is on. • If the switch status doesn't change and/ or is reflected incorrectly in memory – Change the P-MP Board; the switch may have failed.
Car Safety Sting Open	Voltage lost to the Car Safety String (SAFC) Terminal on the P-MPIO Board OR not making it to memory. Fire Panel Stop Switch, Safety Clamp, Emergency Exit Switch, or Cartop Inspection Stop Switch is open. Refer to Pages 3 and 6 of the prints	SAFC = 0	• Voltage loss on 4A (120VAC) – Check Fuse F4A on PDB Board (Page2 of prints). Note jobs with Cycle Testing will reference 4CT rather than 4A. • Fire Panel Stop Switch, Safety Clamp, Emergency Exit Switch, or Cartop Inspection Stop Switch is open. – Verify that full voltage is making it to SAFC. If it's not, trace backwards until the voltage loss is found refer to Pages 3 & 6 of prints) • Verify the yellow jumpers SAFC1 and SAFC2 located on the right lower corner of the P-MP-IO board are set to the left (closed position). • If 120VAC voltage has been verified on terminal SAFC and the SAFC LED is lit, then navigate to Troubleshoot → Flags → Safety I/O Flags and ensure that SAFC is ON in memory. If the SAFC flag is low in memory – Replace the P-MPIO Board.

Fault Message	Description	Logical Conditions	Possible Causes/ Solutions
Car Timed Out of Service	Demand exists and the car was held at the floor for a time greater than the programmed amount of the Time Out of Service Timer	TOS = 1	• Verify the closing attempts fault counter is not set too low – Navigate to Adjust→Car Performance→Door Options→Closing Attempts Fault Counter. This is the number of times it will try to close the doors before the fault comes up. Current default setting is 5 times. (If set to 0, it will try to close indefinitely) • Doors may not be responding to the close command from the controller – Ensure that DCF output is coming in. Navigate to Troubleshoot→Flags→Door Flags. Look at DCFF or DCFR (front or rear). • DCF is making it to the door operator, but there is a door operator issue. – Verify the door operator. • A stuck photo-eye (PHE), door open button (DOB), car call, or hall call might be preventing the doors from closing. • Make sure the Time Out of Service timer is programmed with an appropriate value, the factory default is 45 seconds. Extend the timer as necessary.
Car Out of Service	Car was unable to close its doors and or respond to call service demand and the Time Out of Service timeout expired and then the Car Out of Service Timer timeout also expired placing the car out service and to cancel call demand(s).	COS =1 TOS = 1	• Verify the closing attempts fault counter is not set too low – Navigate to Adjust→Car Performance→Door Options→Closing Attempts Fault Counter. This is the number of times it will try to close the doors before the fault comes up. Current default setting is 5 times. (If set to 0, it will try to close indefinitely) • Doors may not be responding to the close command from the controller – Ensure that DCF output is coming in. Navigate to Troubleshoot→Flags→Door Flags. Look at DCFF or DCFR (front or rear). • DCF is making it to the door operator, but there is a door operator issue. – Verify the door operator. • A stuck photo-eye (PHE), door open button (DOB), car call, or hall call might be preventing the doors from closing. • Make sure the Time Out of Service timer is programmed with an appropriate value, the factory default is 45 seconds and the car out service timer is set for at least 5 times the time out of service value, default is 6 minutes, extend the timers as necessary

Fault Message	Description	Logical Conditions	Possible Causes/ Solutions
Car-Top Inspection Switch	SP1 and SP2 ICT1 and ICT2 or ICTE1 and ICTE2 inputs status are not the same or ICTE input is active and the car is not on Car Top Inspection Mode Refer to Pages 3 and 6 of the prints	ICT1 = 1 ICT2 = 0 OR ICT1 = 0 ICT2 = 1 OR ICTE1 = 0 ICTE2 = 1 OR ICTE1 = 1 ICTE2 = 0 OR ICT = 1 ICTE = 1 OR ICT = 1 ICTU = 1 OR ICT = 1 ICTD = 1 OR ICTE = 0 ICTU = 1 OR ICTE = 0 ICTD = 1	• If the Fault is generated when the car is not in Car Top Inspection Mode, verify that ICTE, ICTU, and ICTD LEDs are off on the P-MPIO board, refer to pages 3 and 6 of the prints. • If fault is observed while commanding the car to move, verify the ICT LED status on the P-MPIO board is off as the car top inspection switch is placed to Inspection. • If the fault persists, Navigate to Troubleshoot → Flags → Inspection Flags and verify that ICT and ICTE, ICTU, and ICTD follow their respective switch setting, refer to page 6 of the prints, if they do not follow replace the P-MPIO Board • If the flags for ICT or ICTE are a color other than black or blue, then a mismatch exists when the Safety processors SP1 and SP2 read these inputs. – Replace the P-MPIO Board
Cedes Communication Error	CEDES APS Sensor Communication error. Verify the connection from the device to P-TOC is correct; refer to Page 6CEDES APS of the prints. This error can be caused by the power supply not being within +/- 20% of the 24VDC and can also be cleared by a power cycle to the device.		• Unplug the CEDES APS unit from the P-TOC to remove power then plug it back in and verify the fault has been cleared. • Verify the connection between the CEDES APS Sensor and the P-TOC board is correct. Refer to Page 6CEDES APS of the prints. • After verifying the connection is correct, interchange the Main and Auxiliary connection on the CEDES APSC and confirm on the View Selector Data Window (Install→View Selector Data) that the fault is now displayed on the Auxiliary data. • If the fault does not move to the Auxiliary device, then replace the Main Cedes P-HNA board • If the fault does move to the Auxiliary device, replace the CEDES APS Sensor.
Cedes Internal Error	CEDES APS Sensor internally generated error. This error can be caused by the power supply not being within +/- 20% of the 24VDC and can also be cleared by a power cycle to the device.		• Unplug the CEDES APS unit from the P-TOC to remove power then plug it back in and verify the fault has been cleared. • Verify the 24VDC power supply is within a +/- 20% range. • If the fault continues to appear, replace the CEDES APS Sensor.

Fault Message	Description	Logical Conditions	Possible Causes/ Solutions
Cedes Partially OFF Rail Left Or Cedes Partially OFF Rail Right	CEDES APS Sensor cannot read the code tape correctly, because the camera is positioned partially off rail to the left or to the right of the tape.		• Clean the optical window on the CEDES APS Sensor device. • Clean the coded tape from any dust or grease. • Verify the alignment of the device is centered to the coded tape. Be sure to use the position indicators on the device to verify alignment, refer to Appendix E of Controller manual • If the fault does not clear, replace the CEDES APS Sensor device.
Cedes OFF Rail Left Or Cedes OFF Rail Right	CEDES APS Sensor cannot read the code tape correctly, because camera is positioned too far to the left or too far to the right.		• Clean the optical window on the CEDES APS Sensor device. • Clean the coded tape from any dust or grease. • Verify the alignment of the device is centered to the coded tape. Be sure to use the position indicators on the device to verify alignment, refer to Appendix E of Controller manual • If the fault does not clear, replace the CEDES APS Sensor device
Cedes Too Close Or Cedes Partially Too Close	CEDES APS Sensor cannot read the code tape correctly, because camera is positioned too close to the tape.		• Clean the optical window on the CEDES APS Sensor device. • Clean the coded tape from any dust or grease. • Verify the distance and alignment of the device to the coded tape. Be sure to use the position indicators on the device to verify alignment, refer to Appendix E of Controller manual. • If the fault does not clear, replace the CEDES APS Sensor device
Cedes Too Far Back Or Cedes Partially Too Far Back	CEDES APS Sensor cannot read the code tape correctly, because camera is positioned too far away from the tape.		• Clean the optical window on the CEDES APS Sensor device. • Clean the coded tape from any dust or grease. • Verify the distance and alignment of the device to the coded tape. Be sure to use the position indicators on the device to verify alignment, refer to Appendix E of Controller manual. • If the fault does not clear, replace the CEDES APS Sensor device

Fault Message	Description	Logical Conditions	Possible Causes/ Solutions
Cedes Service Recommended	CEDES APS Sensor is almost or completely out of reading range. Verify that mounting and alignment of the code tape and the device is correct utilizing the device LED(s). Clean the optical window, code tape.		• Clean the optical window on the CEDES APS Sensor device. • Clean the coded tape from any dust or grease. • Verify the alignment of the device is centered to the coded tape. Be sure to use the position indicators on the device to verify alignment, refer to Appendix E of Controller manual • If the fault does not clear, replace the CEDES APS Sensor device
Company Exclusive Mismatch	P-MP, P-TOC, and P-COP company exclusive version codes do not match one another		• Contact Elevator Controls Technical Support • Navigate to Install→Initial Settings→Exclusive Conversion to resolve the mismatch.
COP Aux Front Comm. Failed	Unable to maintain CAN Communications between the MP and the Aux. Front COP. Refer to Page8X of the prints to verify CAB CAN network wiring.		• Verify the correct COP configuration settings are correct to account for this car's COP nodes, Navigate to Install→ Initial Settings → MP Cab Node Network → COP Config • Verify the COP dipswitch (COP CONFIG) is set accordingly, refer to page 8X of the prints • Verify wiring from the TOC to COP Aux Font. • Make sure CAN-H and CAN-L are wired the CAB CAN either on JCCB1 or JCCB RJ45 Type Connector NOT to the local COP CAN Bus.
COP Aux Rear Comm. Failed	Unable to maintain CAN Communications between the MP and the Aux. Rear COP. Refer to Page 8RX of the prints to verify CAB CAN network wiring.		• Verify the correct COP configuration settings are correct to account for this car's COP nodes, Navigate to Install→ Initial Settings → MP Cab Node Network → COP Config • Verify the COP dipswitch (COP CONFIG) is set accordingly, refer to page 8RX of the prints • Verify wiring from the TOC to COP Aux Rear. • Make sure CAN-H and CAN-L are wired the CAB CAN either on JCCB1 or JCCB RJ45 Type Connector NOT to the local COP CAN Bus.

Fault Message	Description	Logical Conditions	Possible Causes/ Solutions
COP Main Front Comm. Failed	Unable to maintain CAN Communications between the MP and the Main Front COP. Refer to Page 8of the prints to verify CAB CAN network wiring.		• Verify the correct COP configuration settings are correct to account for this car's COP nodes, Navigate to Install→ Initial Settings → MP Cab Node Network → COP Config • Verify the COP dipswitch (COP CONFIG) is set accordingly, refer to page 8 of the prints • Verify wiring from the TOC to COP Main Front. • Make sure CAN-H and CAN-L are wired the CAB CAN either on JCCB1 or JCCB RJ45 Type Connector NOT to the local COP CAN Bus.
COP Main Rear Comm. Failed	Unable to maintain CAN Communications between the MP and the Main Rear COP. Refer to Page 8Rof the prints to verify CAB CAN network wiring.		• Verify the correct COP configuration settings are correct to account for this car's COP nodes, Navigate to Install→ Initial Settings → MP Cab Node Network → COP Config • Verify the COP dipswitch (COP CONFIG) is set accordingly, refer to page 8R of the prints • Verify wiring from the TOC to COP Main Rear. • Make sure CAN-H and CAN-L are wired the CAB CAN either on JCCB1 or JCCB RJ45 Type Connector NOT to the local COP CAN Bus.
Cycle Test Failed	Flags in RED failed Cycle Test, refer to pages 3 and 4 of the prints (GOV, DLAT, DLSF, DLAB, ICT, ICTE, HDB, CDB, ESTP, IA, IIC, ESCO, SAFC, SAFH, IMR, IICE, CGF, CGR, DLSR, DCAT, DCAB, DCSF, DCSR)		• Verify the CTR relay picks when the CTR output on the P-MPIO Board turns on. Refer to Page 5 of the prints. • Verify the inputs failing test are using as common 4CT and not the 4A bus. Refer to pages 2, 3, 4, and 5 of the prints. • If wired correctly verify that the failed input flag is changing states in memory. Navigate to Troubleshoot → Flags → Safety I/O Flags and confirm that the failed input flag changes states in memory when its corresponding field wire is removed, if it does not replace the P-MPIO board

Fault Message	Description	Logical Conditions	Possible Causes/ Solutions
D Relay Monitor (D Relay Fault)	The DNL-DRM input is on while D relay output is off indicating D Relay contact 1 failed to break open, possibly due to a bad D relay. Refer to Page 1 of the prints Or The DNL-DRM input is off while D relay output is on indicating D Relay contact 1 failed to close, possibly due to a bad D relay. Refer to Page 1 of the prints	DNL-DRM = 1 SD = 0 Or DNL-DRM = 0 SD = 1	• Bad contact on the D relay – Replace the D relay, refer to page 1 of the prints • DNL-DRM input may have failed – Verify that DRM flag is changing states in memory. Navigate to Troubleshoot → Flags → Safety I/O Flags and confirm that the DRM input flag changes states in memory when D relay is removed, if it does not replace the P-MPIO board • If problem occurs while taking off a bad contact of the EB1-EB2 or EBX1-EBX2 relays may be preventing the D relay coil from energizing. Refer to Page 5 of the prints. Note: If EB1-EB2 or EBX1-EBX2 relays are the source of the fault, momentarily the U, D and H Led outputs only, may appear to be on simultaneously prior to fault declaration. Replace EB1-EB2 and EBX1-EBX2 relays
DNL Offset Corrupted	Data integrity error has been detected with the learned DNL Position.		• Try a Computer Reset and verify that the fault cleared. • If the fault persists after the Computer Reset, perform a bottom landing Floor Setup Procedure, refer to section 3.8 of controller manual • If error persists, replace the P-MP Board. and perform a new Floor Setup Procedure, refer to section 3.8 of controller manual
Earthquake Overspeed	Car speed exceeded the programmed earthquake overspeed threshold.		• The Car, while in Earthquake operation, exceeded the earthquake trip speed. – Verify that the Earthquake trip speed is not set lower than the earthquake speed but rather is set to about 10% above earthquake speed setting, Navigate to Install→Initial Settings→Speed Profile→Earthquake Trip Speed.
EB1-EB2 Relays Fault (Aux Brake Main Relays Fault)	EB1 and EB2 relays cycle testing verification failed. RG input did not match EB1-EB2 status state, refer to pages 2 & 3 of the prints	EB1 and EB2 = 0 RG = 1 OR EB1 and EB2 = 1 RG = 0	• Verify RG, RGBP, and RGOK slide jumpers setting on the PDB board; refer to page2 of the prints. • Verify EB1 and EB2 output LEDs match RG input LED on the P-MPIO, if doesn't match replace Q1_03 and Q1_04 output triacs, if replacing triacs does not resolve the problem it's possible that one or more relays could have failed, try replacing EB1 and/ or EB2 relays; refer to pages 2 and 3 of the prints. • Once Output and Input LEDs match, if the problem persists, navigate to Troubleshoot→Flags →Safety I/O Flags to verify that EB1 and EB2 outputs vs. RG input status, if they do not match replace the P-MPIO board.

Fault Message	Description	Logical Conditions	Possible Causes/ Solutions
EBX1-EBX2 Relays Failure (Aux Brake Aux Relays Fault)	EBX1 and EBX2 relays cycle testing verification failed. RGBP input did not match EBX1- EBX2 status state, refer to pages 2 & 3 of the prints	EBX1 and EBX2 = 0 RGBP = 1 OR EBX1 and EBX2 = 1 RGBP = 0	• Verify RG, RGBP, and RGOK slide jumpers setting on the PDB board; refer to page2of the prints. • Verify EBX1 and EBX2 output LEDs match RGBP input LED on the P-MPIO, if doesn't match replace Q1_01 and Q1_02 output triacs, if replacing triacs does not resolve the problem it's possible that one or more relays could have failed, try replacing EBX1and/ or EBX2 relays; refer to pages 2 and 3 of the prints. • Once Output and Input LEDs match, if the problem persists, navigate to Troubleshoot→Flags →Safety I/O Flags to verify EBX1 and EBX2 outputs vs. RGBP input status. If they do not match replace the P-MPIO board.
Emergency Stop Switch Open	The Emergency Stop switch in the COP has been set to Stop, return to Run position or SP1 and SP2 do not read the same switch status for the ESTP1 & ESTP2, refer to Pages 6and 3 of prints	ESTP1 = 0 ESTP2 = 0 CSB = 0 OR ESTP1 = 0 ESTP2 = 1 OR ESTP1 = 1 ESTP2 = 0	• Verify the Emergency Stop switch in the COP is set to Run position • Confirm that the Emergency Stop switch is wired correctly, refer to Pages 3 and 6 of the prints • Verify 120 VAC are measured at the ESTP terminal on the P-TB board. • Verify ESTP LED is on the P-MPIO board, and observe memory flag status, Navigate to Troubleshoot → Flags →Safety I/O Flags. • If flag status color in other than black or blue, SP1 and SP2 are not agreeing on the ESTP input status, replace the P-MPIO board • If the flag status doesn't match the LED, replace the P-MPIO board
ESCO Contactor Fault (ESCO Contactor)	ESCO Output is Off and it's monitored NO contact through the DSAF input remained active.	ESCO = 0 DSAF = 1 Test Performed only when STOP = 1	• Verify Mechanical Operation of ESCO contactor. • Manually actuate the ESCO contactor and observe the DSAF input Led on the P-MPIO board turns on as contactor is pressed and turns off when released, if not replace the ESCO contactor. • Verify the operation of the DSAF input on the P-MPIO Board – Navigate to Troubleshoot→Flags →Safety I/O Flags and observe the DSAF flag changing states in memory when the ESCO contactor is manually actuated, if the DSAF flag doesn't change state in memory, but it does change state on the P-MPIO status LED – Replace the P-MPIO Board.

Fault Message	Description	Logical Conditions	Possible Causes/ Solutions
ETS Bypass Enabled	The ETS Bypass option is not allowed during Automatic Operation, reset the ETS Bypass option	ETS Bypass = On	• The ETS Bypass Option is set to yes while the car is on automatic mode of operation. Navigate to Install → Learn Functions → ETS Learn → ETS Learn Up (or Down) and set the ETS Bypass option off
ETS Learn Required	The Up/Down ETS, Emergency Terminal Slowdown, learn has not been performed or a parameter configuration change has been performed to landing positions or speed profile parameters requiring a new ETS learn be performed	ESTD = 1	• Perform an ETS learn for both the up & down directions. – Place the car at a terminal landing. Navigate to Install→Learn Functions→ETS Learn. • Select either ETS Learn Up or Down based on car current landing position then follow the on-screen instructions to complete the ETS learns. • Once the ETS learns are complete – Navigate to Install→File Transfer → (follow the on-screen instructions to get into file transfer mode) → Safety Configuration Upload. Hit the transfer button in the bottom right corner to begin the transfer. Once the transfer is complete, hit the home button to return to the home screen. The Emergency Slowdown Table Done (ESTD) flag is reset by changes to any of the parameters below, forcing Pixel to request for a new ETS learn be performed in order to clear the fault condition: Floor Positions Top/Bottom Floor Number Contract Speed Hydro STD Offset DNL/ UNL Position
Fault PB Stuck	The System Fault Reset PB is stuck in the ON position	FRST = 1 Fault Reset PB Stuck Timer Expired	• Navigate to Troubleshoot→Flags→Safety IO Flags and verify the mFRST flag is only on when the System Fault Reset pushbutton is being pressed. • If it is always on – Replace the P-MP Board.
Fault Reset Switch	SP1 and SP2 FRST1 and FRST2 input status are the same, refer to Page 3 of prints	FRST1 = 0 FRST2 = 0 OR FRST1 = 1 FRST2 = 1	• If flag status color is other than black or blue, SP1 and SP2 are not agreeing on the FRST input status, replace the P-MPIO Board • Verify the flag mFRST changes state accordingly. Navigate to Troubleshoot→Flags→Safety I/O Flags verify that is on when System Fault Reset push button is pressed and low when released. • If it does not go low when released, replace both the P-MP and P-MPIO Boards.

Fault Message	Description	Logical Conditions	Possible Causes/ Solutions
Discrete Fire Ph1 Switch (Fire Ph1 Switch)	The Fire Ph1 Switch has none of is inputs active, must have at least one input active to be on a valid state, refer to page 9 of the prints	Discrete Ph1 switch interface AND {FOFF = 0 RES = 0 FON = 0 OR FON = 1 RES = 1 OR FON = 1 FOFF = 1 OR RES = 1 FOFF = 1}	• Verify wiring of the Fire Ph1 Switch; refer to Page 5b or 5Zb of the prints, Navigate to Troubleshoot→Flags→Emergency Service Flags and verify only one of the Fire Ph1 Switch inputs is active.
Fire Phase 2 switch	The Fire Ph2 Switch has none of is inputs active, must have one input active to be on a valid state, or has more than one active at the same time, refer to page 8 of the prints	FCS = 0 F2OFF = 0 FDHD = 0 OR FCS = 1 F2OFF = 1 OR FCS = 1 FDHD = 1 OR F2OFF = 1 FDHD = 1	• Verify the wiring of the Fire Ph2 Switch and the P-COP Configuration switch settings. Refer to Page. 8 of the prints. • Navigate to Troubleshoot→ Flags→Emergency Service Flags and verify only one of the Fire Ph2 Switch inputs is active. Note: Navigation to screen above is available through the P-COP on board diagnostics also.
Floor DZ Pos. Corrupted	Data integrity error has been detected with one or more of the learned Per Floor Door Zone Positions.		• Try a Computer Reset and verify that the fault cleared. • If the fault persists after the Computer Reset, perform anew Floor Setup Procedure, refer to section 3.8 of controller manual • If error persists, replace the P-MP Board. and perform a new Floor Setup Procedure, refer to section 3.8 of controller manual

Fault Message	Description	Logical Conditions	Possible Causes/ Solutions
Front Door Bounced At Floor XX XX = Landing number	The Front door bounced open while the car was taking off from a floor on an automatic run	SDI Pattern = Soft Start H = 1 HI = 1 AND CGF= 0 DLKF = 1 OR CGF= 1 DLKF = 0 OR CGF= 0 DLKF=0 *DLKF flag comprises the Status of All the Front Door Locks and Front Door Close Contacts when the door option is configured to Freight or Manual door.	• DLKF or CGF dropped momentarily during takeoff. Navigate to Troubleshoot→Event Logs→Event Playback→Standard DDR Event Log and review the door flags for this fault to confirm which of the door signals dropped during take off • At the floor number displayed in the fault, verify the door closing adjustments prevent any door bouncing from a slammed closing • Verify that doors don't roll back or relax open on takeoff.
Front Door Clipped At Floor XX XX = Landing number	The front car gate or one of the interlocks clipped, while the car was travelling in high speed	H = 1 HI = 1 AND CGF = 0 DLKF = 1 OR CGF = 1 DLKF = 0 OR CGF = 0 DLKF=0 *DLKF flag comprises the Status of All the front Door Locks and front Door Close Contacts when the door option is configured to Freight or Manual door	• DLKF or CGF dropped momentarily while traveling on high-speed. Navigate to Troubleshoot→Event Logs→Event Playback→Standard DDR Event Log and review the door flags for this fault to confirm which of the door signals dropped during the run • At the floor number displayed in the fault, verify door clearances as the car travels through the hoistway.

Fault Message	Description	Logical Conditions	Possible Causes/ Solutions
Front Door Limit Switches	The front door open limit and door closed limit are both low at the same time. Front Door limits valid states: Door Fully Open DOLF = 0, DCLF = 1 Door Fully Closed DOLF = 1, DCLF = 0 Door Partially Close-Open DOLF = 1, DCLF = 1	DOLF = 0 DCLF = 0	• DOLF and DCLF are both low in memory – Verify the current position of the doors/ verify the status of the door limits on the door operator. • If the door operator limits are in the correct state – Verify that the door limit signals are reflected correctly on the P-TOC board terminals DOLF and DCLF. • If the door limits are not displayed correctly on the TOC Board – Correct/verify the door limit wiring/ setup. • If the DOLF and DCLR signals seem correct on the P-TOC board – Verify that they match in memory. Navigate to Troubleshoot→Flags→Door Flags • If the door limits status on the TOC and their status in memory does not match – Then the DOLF/ DCLF inputs could be damaged. Replace the P-TOC Board
Front Door Locks Fault	The front door open limit is open; indicating that the doors are fully open, but either or both the front car gate or front hoistway door locks are still closed.	DOLF = 0 CGF = 1 DLKF = 0 OR DOLF = 0 CGF = 0 DLKF = 1	• The car gate or the door lock didn't open – Verify status of DOLF, DLKF & CGF. Navigate to Troubleshoot→Flags→Door Flags and Figure out which flag is in the wrong state. • Verify that the door contacts are open by ensuring that there is no voltage on CGF or the door lock contact for that floor Refer to Page4 of the prints • If there is no voltage but it stays high in memory – Replace the P-MPIO Board.
Front Door Not Fully Closed	The front door close limit is closed while the doors are locked. OR The front door close limit is open, but either the car gate or door lock is not closed.	CGF = 1 DLKF = 1 DCLF = 1 OR CGF = 0 DLKF = 1 DCLF = 0 OR CGF = 1 DLKF = 0 DCLF = 0	• Either the front door close limit, the car gate closed contact, or a hoistway door closed contact is in the incorrect state. – Verify which state the doors are in. Navigate to Troubleshoot→Flags→Door Flags. Verify and correct whichever flag isn't in the correct state. • Verify that the door contacts are closed by ensuring that there is voltage (120VAC) on CGF and the door lock contacts, refer to Page4 of the prints • If there is voltage but corresponding input(s) stay low in memory – Replace the P-MPIO Board

Fault Message	Description	Logical Conditions	Possible Causes/ Solutions
Front PHE Cycle Test Failed	Front Photo Eye has failed its cycle test, test performed after the door has reached its fully opened position and before door closing starts	PHETF = 1 PHEF = 0 PEMF = 0 OR PHETF = 1 PHEF = 0 PEMF = 1 OR PHETF = 1 PHEF = 1 PEMF = 0	• Verify the PHETF output picks the PHETF relay and verify both the PHEF and the PEMF inputs come in when the PHETF relay is picked. Refer to pages 6 and 6b of the prints. • Verify that the Input PEMR and Output, PHETF, are mapped correctly in the Pixel System. Navigate to Install→IO Mapping. Test information detail: • Prior to the door closing PHETR output will be turned on to signal door operator to test the reopening device. Pixel will wait for about 5 seconds for PHEF and PEMF inputs to both are active to terminate or fail test.
Front PHE Fault	PHEF input remained high for more than the programmed Photo Eye Fail Timer value	PHEF = 1 Photo Eye Fail Timer Expired	• Verify the PHEF input is not stuck in the active state by disconnecting the field wire from its assigned location and viewing the status by navigating to Troubleshoot→Flags→Door Flags • Extend the Photo Eye Fail Timer as needed, default value of 5 minutes, Navigate to Adjust→Car Performance→Timers→Front Door Timers→Photo Eye Fail
Governor Switch Opened	Governor auxiliary monitored contact opened. Verify the Governor mechanical operation, reset the Governor and press the System Fault Reset pushbutton on the P-MP board. Refer to Page3 of the prints	GOV = 0	• Verify and make sure the Governor switch is closed • If the Governor switch is closed –verify voltage on the GOV Terminal (120VAC), if there is no voltage on GOV terminal Verify Governor Switch wiring, refer to Page 3 of the prints • If there is voltage verify that GOV flag is active in memory. Navigate to Troubleshoot → Flags → Safety I/O Flags. • If GOV has voltage but is off in memory, replace the P-MPIO Board. • If the flag for GOV is a color other than black or blue, then a mismatch exists when the Safety processors SP1 and SP2 read this input – Replace the P-MPIO Board
Hall Board Lost (Name of Node Lost)	Communication to the named P-Hall node was lost. Verify P-Hall node wiring, refer to page 9 of the prints		• Verify named Hall node wiring or integrity of RJ45 cables and that the cables are properly seated into RJ-45 sockets • If a P-Hall Node has been physically reconfigured to a different node (change in the dipswitch) this fault will occur since the previous setting is no longer detected. Press the Fault Reset Button to clear the message from the Main Window

Fault Message	Description	Logical Conditions	Possible Causes/ Solutions
Hall Call Disconnect Tripped	The Hall Call Disconnect function has been tripped causing all hall calls to be dropped, refer to statistics counter window for the trigger code.	HCD = 1	• Navigate to Troubleshoot→Statistic Counters→HCD Trigger Code • Use the trigger code to guide you on seeking a solution.
Hall Comm. Failed	Successful communication to at least one Hall node was established, but all Hall communication has stopped, verify nodes configuration and wiring. Refer to Page 9 of the prints		• Remove the Hall Nodes network from the controller and install a known good Hall Node board and verify that the Hall LED status indicator on the P-MP board comes on, if it does not turn on replace the P-MP board; if it turned on verify hall network wiring, refer to page 9 of the prints.
Hall Door Bypass w/o Inspection	The Hall Door Bypass switch is active while the car is not on Car Top inspection or In Car inspection	ICT = 1 IIC = 1 HDB = 1	• Hall door bypass switch cannot be active while the controller is not on either car top or in car inspection – Turn off Hall Door Bypass switch • If the hall door bypass switch is off – verify that the switch is off in memory. Navigate to Troubleshoot → Flags → Inspection Flags and look at the status of HDB. The flag is low if the switch is off and high if the switch is on. • If the switch status doesn't change and/ or is reflected incorrectly in memory – Change the P-MP Board; the switch may have failed.
Heat Detector Tripped	Heat Sensor input has been activated. Refer to Pages 5or 5b of the prints.	HSR = 1	• Heat Detector input was or still is active triggering the Heat Detector mode of operation • Verify Heat Detector device operation if temperature is not above detection settings. • Verify the polarity of the input is set correctly. Navigate to Adjust→Car Performance→Fire Service Options→ Heat Sensor Input • Verify the state of the physical input using the Local Diagnostics. Navigate to the appropriate window depending on where the Input is mapped to, Troubleshoot→ Local Diagnostics, if input does not match voltage at input terminal try re-mapping the HSR input to an unused input if available or replace the Pixel board where the HSR input is mapped.

Fault Message	Description	Logical Conditions	Possible Causes/ Solutions
Heavy Load In Car	The load-weighing device indicates that the car is loaded to capacity. When a Heavy Load Condition is registered the Hall Calls are bypassed until the loaded condition is cleared.	HLI = 1	• The HLI input is activated and the car will bypass hall calls, if the car is empty, verify the load weighing device configuration and operation. • For discrete load weighing unit, if there is no voltage on HLI – Ensure that HLI is low in memory. Go to Troubleshoot → Flags → Service Flags, if not low try remapping HLI input to an unused input if available or replace Pixel board where input is mapped. • For CAN Based Load Weighing unit, verify the settings for Heavy Load are programmed correctly, navigate to: Install→Initial Settings→Load Weighing Config, i.e. about 80% of full load capacity • Verify Load Weigh Readings to be in line with current load weight in the cab, if not in line refer to Pixel Controller manual Appendix C for Load weighing device Zero and recalibration processes
High Overspeed	Car speed exceeded the programmed contract overspeed threshold.		• The Car, while in Automatic operation, exceeded the contract overspeed threshold Verify that the High Speed trip speed is not set lower than the contract speed but rather is set to about 5% to 10% above contract speed setting, Navigate to Install→Initial Settings→Speed Profile→ Highspeed Trip Speed • Verify car is not overshooting contract speed during acceleration; Navigate to Troubleshoot →Drive→Drive Performance Data and observe that the measured speed does not reach the overspeed threshold value. If close to the threshold value decrease speed profile parameters Acceleration and Roll Over Jerk values and adjust drive response as needed to prevent car from overshooting contract speed
Hoistway Access CGF is Open	The car cannot be commanded to move in Hoistway Access because the car gate front, CGF, is open and Access operation is assigned to bypass the rear gate and locks	CGF = 0 IA = 0 And Access Operation assigned to the rear doors	• Verify the front car gate is closed • If closed verify CGF LED is on in the P-MPIO board, if is not on verify CGF wiring refer to pages 4 and 6b of the prints • If LED is on verify the CGF flag is active, Navigate to Troubleshoot → Flags →Door Flags, if not active in replace the P-MPIO board. Note: Access door operation assignment parameters can be adjusted by navigating to Install→Initial Settings→Hall Node Network (Top Access Node and Bottom Access Node)

Fault Message	Description	Logical Conditions	Possible Causes/ Solutions
Hoistway Access CGR is Open	The car cannot be commanded to move in Hoistway Access because the car gate rear, CGR, is open and Access operation is assigned to bypass the front gate and locks	CGR = 0 IA = 0 And Access Operation assigned to the front doors	• Verify the rear car gate is closed • If closed verify CGR LED is on in the P-MP-REAR board, if is not on verify CGR wiring refer to pages 4 and 6R of the prints • If LED is on verify the CGR flag is active, Navigate to Troubleshoot → Flags →Door Flags, if not active in replace the P-MP-REAR board. • Note: Access door operation assignment parameters can be adjusted by navigating to Install→Initial Settings→Hall Node Network (Top Access Node and Bottom Access Node)
Hoistway Access DCAB is Open	The car cannot be commanded to move in Hoistway Access because the door close contact, DCAB, bottom is open, and the car is not within the bottom access zone.	DCAB = 0 IA = 0 And Car not within the bottom access zone	• Verify the bottom access door close contact is closed • If closed verify DCAB LED is on in the P-MP-REAR board, if is not on verify DCAB wiring refer to page 4 of the prints • If LED is on verify the DCAB flag is active, Navigate to Troubleshoot → Flags →Door Flags, if not active in memory replace the P-MP-REAR board.
Hoistway Access DCAT is Open	The car cannot be commanded to move in Hoistway Access because the door close contact, DCAT, top is open, and the car is not within the top access zone.	DCAT = 0 IA = 0 And Car not within the top access zone	• Verify the top access door close contact is closed • If closed verify DCAT LED is on in the P-MP-REAR board, if is not on verify DCAT wiring refer to page 4 of the prints • If LED is on verify the DCAT flag is active, Navigate to Troubleshoot → Flags →Door Flags, if not active in memory replace the P-MP-REAR board.
Hoistway Access DCSF is Open	The car cannot be commanded to move in Hoistway Access because the intermediate front door close contacts string, DCSF, is not closed	DCSF = 0 IA = 0	• Verify all intermediate front door close contacts are closed • If closed verify DCSF LED is on in the P-MP-REAR board, if is not on verify DCSF wiring refer to page 4 of the prints • If LED is on verify the DCSF flag is active, Navigate to Troubleshoot → Flags →Door Flags, if not active in memory replace the P-MP-REAR board.
Hoistway Access DCSR is Open	The car cannot be commanded to move in Hoistway Access because the intermediate rear door close contacts string, DCSR, is not closed	DCSR = 0 IA = 0	• Verify all intermediate rear door close contacts are closed • If closed verify DCSR LED is on in the P-MP-REAR board, if is not on verify DCSR wiring refer to page 4 of the prints • If LED is on verify the DCSR flag is active, Navigate to Troubleshoot → Flags →Door Flags, if not active in memory replace the P-MP-REAR board.

Fault Message	Description	Logical Conditions	Possible Causes/ Solutions
Hoistway Access DLAB is Open	The car cannot be commanded to move in Hoistway Access because the door lock bottom, DLAB is open and the car is not within the bottom access zone.	DLAB = 0 IA = 0 And Car not within the bottom access zone	• Verify the bottom access door lock contact is closed • If closed verify DLAB LED is on in the P-MPIO board, if is not on verify DLAB wiring refer to page 4 of the prints • If LED is on verify the DLAB flag is active, Navigate to Troubleshoot → Flags →Door Flags, if not active in memory replace the P-MPIO board.
Hoistway Access DLAT is Open	The car cannot be commanded to move in Hoistway Access because the door lock top, DLAT is open and the car is not within the top access zone.	DLAT = 0 IA = 0	• Verify the top access door lock contact is closed • If closed verify DLAT LED is on in the P-MPIO board, if is not on verify DLAT wiring refer to page 4 of the prints • If LED is on verify the DLAT flag is active, Navigate to Troubleshoot → Flags →Door Flags, if not active in memory replace the P-MPIO board.
Hoistway Access DLSF is Open	The car cannot be commanded to move in Hoistway Access because the intermediate front door lock contacts string, DLSF, is not closed	DLSF = 0 IA = 0	• Verify all intermediate front door lock contacts are closed • If closed verify DLSF LED is on in the P-MPIO board, if is not on verify DLSF wiring refer to page 4 of the prints • If LED is on verify the DLSF flag is active, Navigate to Troubleshoot → Flags →Door Flags, if not active in memory replace the P-MPIO board.
Hoistway Access DLSR is Open	The car cannot be commanded to move in Hoistway Access because the intermediate rear door lock contacts string, DLSR, is not closed.	DLSR = 0 IA = 0	• Verify all intermediate rear door lock contacts are closed • If closed verify DLSR LED is on in the P-MP-REAR board, if is not on verify DLSR wiring refer to page 4 of the prints • If LED is on verify the DLSR flag is active, Navigate to Troubleshoot → Flags →Door Flags, if not active in memory replace the P-MP-REAR board

Fault Message	Description	Logical Conditions	Possible Causes/ Solutions
Hoistway Access Insp. Switch	SP1 and SP2 IA1 and AI2 inputs status are not the same or a top or bottom access command to move is active and access operation is not enabled and Refer to Pages 3, 7 and 9 of the prints	IA1 = 1 IA2 = 0 OR IA1 = 0 IA2 = 1 OR IA1=IA2= 1 and IATU or IATD or IABU or IABD is 1	• Fault will be generated if access command to move is requested when the car is not in Inspection Access mode. If the fault is observed when trying to command the car to move, verify that the activation of the in-car access switch places the car on Inspection Access mode of operation. • Verify that the IA LED in the P-MPIO board turns off as the in-car access inspection switch is placed to access and Pixel mode of operation changes to access mode, verify switch wiring, and refer to pages 7 and 9 of the prints. If LED status does not match the switch position; replace the P-MPIO board. • If the fault clears as soon as the in car switch is place on access a command to move from one of the access hall nodes is being received, Navigate to Troubleshoot → Flags → Inspection Flags and verify that IA flag status follows the in car Access switch settings and do the same for the IATU, IATD, IABU and IABD, refer to page 9 of the prints for top and bottom access to access node boards wiring. • If the flag for IA is a color other than black or blue, then a mismatch exists when the Safety processors SP1 and SP2 read this input – Replace the P-MPIO Board
Hoistway Access Out of Zone Fault	The car's current position is either above the Bottom Access Limit (BAL) or below the Top Access Limit (TAL) while in Access Inspection		• If car inspections access zones are at the top and bottom landings zero out values for the Top and Bottom Access Marker parameters Navigate to Install→Learn Functions→Virtual Limits→TAM and BAM = 000.000 ft • Verify the Car's current position is within the BAL or TAL position and that their respective positions agree with job requirements • Press the Help pushbutton in the Virtual Limits window for a pictorial view of how-to setup these limits.
Hoistway Door Bypass Switch	SP1 and SP2 HDB1 and HDB2 inputs are both on or both off simultaneously, Pixel monitors both sides of the switch status for. Refer to Page 3 of prints	HDB1 = 1 HDB2 = 1 OR HDB1 = 0 HDB2 = 0	• Navigate to Troubleshoot → Flags → Inspection Flags and make sure that HDB is either black or blue • Verify the communication status for SP1 and SP2 by navigating to Troubleshoot → Controller Network → (SP1) and (SP2) • If the SP1 and SP2 processors still read the same status and are communicating correctly – Replace the P-MP Board; the switch may have failed. If they are not communicating correctly – Replace both the P-MP and P-MPIO Boards

Fault Message	Description	Logical Conditions	Possible Causes/ Solutions
Hoistway Not Learned	The hoistway Position Learn has not been complete to allow the car to run on automatic mode. Verify all landing and virtual limit switches positions.		• All landing positions have not been learned. – Complete the hoistway Position Learn, refer to section 3.8 Hoistway Position Learn for tractions and hydraulics in the installation and adjustment manuals, • Verify the learned DNL position is below the Bottom Landing learned position. • Verify the learned UNL position is above the TOP Landing learned position. • Verify each floor's learned position has a learned position greater than the previous floor.
Hoistway Safety String Open	Voltage lost to the SAFH Terminal on the P-MPIO Board or not making it to memory. The pit stop switch, buffer switch, or the up / down terminal switches are open. Refer to Pages3 of the prints	SAFH = 0 SAFC = 1	• For Traction: The Up or Down Terminal Switches, the Buffer Switches, or the Pit Stop Switch is open. – Verify that full voltage is making it to SAFH. If it's not, trace backwards until the voltage loss is found., refer to Page3 of the prints • For Hydro: Up Overtravel Limit, Plunger Following Guide (if required), Slack Cable (if required), or Pit Access Door (if required) may be open. – Verify that full voltage is making it to SAFH. If it's not, trace backwards until the voltage loss is found, refer to Page3 of the prints • After confirming the SAFH terminal has 120VAC verify that the SAFH LED is lit, then navigate to Troubleshoot → Flags → Safety I/O Flags and ensure that SAFH is ON in memory. If the SAFH flag is low in memory – Replace the P-MPIO Board.
Hot Oil Input Active	Hot Oil input has been activated. Refer to Pages 4 and 5 of the prints.	HOT = 1	• Hot Oil input was or still is active triggering the Hot Oil mode of operation • Verify the Oil temperature • If the Oil is not hot, verify the state of the HOT input, if active verify that the oil temperature sensor works correctly. • Verify the polarity of the input is set correctly. Navigate to Adjust→Car Performance→Hydraulic Options→Hot Oil • Verify the state of the physical input using the Local Diagnostics. Navigate to the appropriate window depending on where the Input is mapped to, Troubleshoot→Local Diagnostics, if input does not match voltage at input terminal try re-mapping the HOT input to an unused input if available or replace the Pixel board where the HOT input is mapped.

Fault Message	Description	Logical Conditions	Possible Causes/ Solutions
Hydro ETS Up Overspeed	Car speed exceeded the learned terminal landing speed profile in the Up direction		• At the up-terminal slowdown, the car was travelling faster than the learned approach speed profile. If any changes were made that could affect the speed of the car – An ETS Learn in both directions must be completed. Navigate to Install→Learn Functions→ETS Learn
Hydro ETS Down Overspeed	Car speed exceeded the learned terminal landing speed profile in the Down direction		• At the down-terminal slowdown, the car was travelling faster than the learned approach speed profile. • If any changes were made that could affect the speed of the car – An ETS Learn in both directions must be completed. Navigate to Install→Learn Functions→ETS Learn Note: The ETS Down Overspeed is not required by code and can be disabled by navigating to Install→Initial Settings→Speed Profile→Down ETS Warning Count and set it to 0.
I2C Bus Error	Communication error on the I2C bus for the Safety Processors.		• Perform a Computer Reset and verify the condition still exists. If the fault is still active – Replace the P-MPIO Board
In-Car Inspection Switch	SP1 and SP2 IIC1 and IIC2 or IICE1 and IICE2 inputs status are not the same or IICE input is active and the car is not on In Car Inspection Mode Refer to Pages 3 and 7 of the prints	IIC1 = 1 IIC2 = 0 OR IIC1 = 0 IIC2 = 1 OR IICE1 = 0 IICE2 = 1 OR IICE1 = 1 IICE2 = 0 OR IIC = 1 IICE = 1	• If the Fault is generated when the car is not In Car Inspection Mode, verify that IICE, LED is off on the P-MPIO board and IICU and IICD LEDs are off on the P-COP board, refer to pages 3 and 7 of the prints. • If fault is observed while commanding the car to move, verify the IIC LED status on the P-MPIO board is off as the in-car inspection switch is placed to Inspection. • If the fault persists, Navigate to Troubleshoot → Flags → Inspection Flags and verify that IIC and IICE, IICU, and IICD follow their respective switch setting, refer to page7 of the prints, if IIC and IICE do not follow replace the P-MPIO board or if the IICU or IICD do not follow replace the P-COP board. • If the flags for IIC or IICE are a color other than black or blue, then a mismatch exists when the Safety processors SP1 and SP2 read these inputs, replace the P-MPIO board

Fault Message	Description	Logical Conditions	Possible Causes/ Solutions
Inspection Up and Down	Both inspection up and down are active at the same time for one or more modes of inspection operation, refer to pages 3, 6, and 7 of the prints	ICTU = 1 ICTD = 1 OR IICU = 1 IICD = 1 OR IATU = 1 IATD = 1 OR IABU = 1 IABD = 1 OR IMRU = 1 IMRD = 1	• Verify which inspection signals are active when the fault condition occurs – Navigate to Troubleshoot → Flags → Inspection Flags. • Verify wiring/inspection switches, refer to pages 3, 6, and 7 of the prints, verify whether the issue goes away if the wire in question is removed (car top inspection up/ ICTU for example) • If the flag goes low when the wire is removed – Then the issue is in the field wiring. Could be a stuck button or a button failure. • If the flag does not go low when the wire is removed replace the Pixel board where input is connected.
Inspection Overspeed	Car speed exceeded the programmed inspection overspeed threshold during an Inspection Run		• The Car, while running on Inspection operation, exceeded the overspeed threshold • Verify that the inspection trip speed (Default 100fpm) isn't set lower than the inspection speed. Navigate to Install→Initial Settings→Speed Profile→Inspection Trip Speed. • If the Controller is a Hydraulic System and has the High Speed on inspection Option enabled, Pixel will use the High-Speed Trip Speed instead of the inspection trip • Navigate to the speed profile as shown above, then verify / adjust the Car's High-Speed Trip Speed settings.
IO Mapping File Corrupted	Data integrity error has been detected with the IO Mapping file, reset P-MP board or re-enter all job programmable Inputs and Outputs.		• Navigate to Install→File Transfer→ System Restore and try reloading a previously saved IO Mapping file to the P-MP. • Navigate to Install→File Transfer→IO Mapping Download and try reloading a previously saved IO Mapping file to the P-MP • If no previously saved file is available, contact Elevator Controls Technical Support for the default IO Mapping for the specific job or navigate to the IO Mapping Window Install → IO Mapping) and remap all job programmable IO(s)

Fault Message	Description	Logical Conditions	Possible Causes/ Solutions
Leveling Overspeed	Car speed exceeded the programmed Leveling Overspeed threshold while leveling or Releveling into a landing		• The Car, while in Automatic operation, exceeded the leveling overspeed threshold, verify that the leveling trip speed (default 100fpm) isn't set lower than the speed of the car as it enters the leveling zone from an automatic run • Navigate to Install→Initial Settings→Speed Profile→Leveling Trip Speed. • *Note:* Leveling overspeed condition usually occurs while the car enters the Leveling Zone. Decreasing the Deceleration parameter value allows for lower speeds while entering the Leveling Zone
Load Weigh Communication	Unable to establish communications between Load Weigh Device and the Pixel, verify wiring from the TOC or the P-TB-C board to Load Weigh Device. Refer to Page QR3 or QR4 of the prints		• Verify Load Weigh Device is powered ON • Verify Communication wiring; refer to Page QR3 or QR4 of the prints. • Verify Load Weigh Device Communication Baud rate is set to 125kbps on the device itself., Navigate to: Install→Initial Settings→Load Weighing Config to verify load weighing parameter settings
Load Weigh Error	Both inputs Light Load and Heavy Load Input are simultaneously active, refer to page 6 of the prints	HLI = 1 LLI = 1	• Verify the load weigh device operation • If the Load Weigh Device is a CAN based device, verify the Heavy Load and Light Load settings are set correctly, about 80% and 20% of full load, Navigate to Install→Initial Settings→Load Weighing Config • If the Load Weigh Device is dry contact based, Navigate to Troubleshoot→Flags→Services Flags to verify the status of HLI and LLI inputs in memory, if both inputs are active remove field wiring, if condition remains, try re-mapping one or both inputs to unused inputs if available or replace the Pixel board where the inputs are mapped.
Logical Physical IO Map	The Pixel I/O Mapping file either did not load properly during power up or it did not save properly during a recent update to the I/O Mapping file		• Perform a Computer Reset on the Pixel Controller • If the fault still occurs, reload the saved IO Mapping File to the Pixel Controller. Navigate to Install→File Transfer→System Restore or IO Mapping Upload • If no previously saved file is available, contact Elevator Controls Technical Support for the default IO Mapping for the specific job or navigate to the IO Mapping Window Install → IO Mapping) and remap all job programmable IO(s)

Fault Message	Description	Logical Conditions	Possible Causes/ Solutions
Low Oil Input Active	Low Oil input has been activated. Refer to Page 5 of the prints.	LOIL = 1	• Low Oil input was or still is active triggering the Low Oil mode of operation • Verify Low Oil device operation • Verify the polarity of the input is set correctly. Navigate to Adjust→Car Performance→Hydraulic Options→ Low Oil Input • Verify the state of the physical input using the Local Diagnostics. • Navigate to the appropriate window (depending on where the Input is mapped to) Troubleshoot→ Local Diagnostics • If input does not match voltage at input terminal try re-mapping the LOIL input to an unused input, if available, or replace the Pixel board where the LOIL input is mapped, refer to page5 of the prints
Low Pressure Switch Active	Low-pressure input has been activated. Refer to Page 5 of the prints.	LPS = 0	• Low Pressure input was or still is active triggering the Low-Pressure mode of operation • Verify Low Pressure device operation • Verify the state of the physical input using the Local Diagnostics. • Navigate to the appropriate window (depending on where the Input is mapped to) Troubleshoot→ Local Diagnostics • If input does not match voltage at input terminal try re-mapping the LPS input to an unused input, if available, or replace the Pixel board where the LPS input is mapped, refer to page5 of the prints.
LWD Re-Cal failure	Load Weigh Device has failed the recalibration process. A manual auto-zero process must be performed. Verification of the Load Weighing device must be performed.		• Verify the Car is at the Bottom landing, place the Pixel Controller on Test. Navigate to Install→Learn Functions→Load Weighing Learn→Load Weighing Readings, and press an Auto Zero soft key pushbutton to perform auto-zero. • Place known weights inside the cab and verify it agrees with Pixel Controller display values navigating to: Install →Learn Functions→Load Weighing Learn→Load Weighing Readings. If reading does not agree a load weighing verification may need to be performed, refer to Appendix C of the controller manual for directions.

Fault Message	Description	Logical Conditions	Possible Causes/ Solutions
Main Cedes Checksum Error	CEDES APS Sensor response fails the Pixel Checksum Integrity Check. Verify the connection from the device to P-TOC is correct; refer to page 6 CEDES APS of the prints.		• Verify the connection between the CEDES APS Sensor and the P-TOC board is correct. Refer to page 6CEDES APS of the prints. • After verifying the connection is correct, interchange the Main and Auxiliary connection on the CEDES APSC and confirm on the View Selector Data Window (Install→View Selector Data) that the fault is now displayed on the Auxiliary data. • If the fault does not move to the Auxiliary device, then replace the Main Cedes P-HNA board. • If the fault does move to the Auxiliary device, replace the CEDES APS Sensor.
Main Cedes Unit Position Error	CEDES APS Sensor cannot read the code tape correctly. Clean the optical window, code tape, and verify the alignment of sensor with the code tape.		• Clean the optical window on the CEDES APS Sensor device. • Clean the coded tape from any dust or grease. • Verify the alignment of the device is centered to the coded tape. Be sure to use the position indicators on the device to verify alignment, refer to Appendix E of Controller manual. • If the fault does not clear, replace the CEDES APS Sensor device
M. Landa & A. Landa Units Swapped	The Main Selector cable is attached to the Aux Selector connector on the P-TOC Board, and vice versa		• The Aux. Landa Unit is physically connected to the Main Landa Unit connection (JMSEL on the P-TOC) is reporting a higher position than the Landa Unit connected to the Auxiliary Landa Unit position (JASEL on the P-TOC) • Swap the JMSEL and the JASEL plugs on the P-TOC Board. The Main Landa Unit should be at the bottom & the Auxiliary Landa Unit should be at the top of the Landa Bracket. Refer to Page 6b of the prints.

Fault Message	Description	Logical Conditions	Possible Causes/ Solutions
Machine Rm Inspection Switch	Machine Room Inspection Enable Input IMRE is active but IMR1 and IMR2 state NOT for Machine Room Inspection. OR SP1 and SP2 do agree on switches status for the Machine Room Inspection and/ or Machine Room Inspection Enable. Refer to Page 3 of prints	IMR = 0 IMRE = 1 OR IMR1 = 1 IMR2 = 0 OR IMR1 = 0 IMR2 = 1 OR IMRE1 = 1 IMRE2 = 0 OR IMRE1 = 0 IMRE2 = 1	• Verify the flags IMR and IMRE change state accordingly. Navigate to Troubleshoot → Flags → Inspection Flags and verify that IMR and IMRE are both in the same state when both are activated. • If they are both high – Verify that they go low when deactivated • If they do not go low – Replace both the P-MP and P-MPIO Board. • If the flags for IMR or IMRE are a color other than black or blue, then a mismatch exists when the Safety processors SP1 and SP2 read these inputs – Replace both the P-MP and P-MPIO Board.
Main Aux Landa Mismatch	Both the Main and the Auxiliary Landa Sensor Units read positions that deviate above learned offset distance between the two sensor units		• Verify both Landa Sensor Units' mechanical placement on top of the car • Perform a Landa Tape Reader Offset learn. • Navigate to Install→Learn Functions→Virtual Limits→Tape Reader Offset. • Press Learn / Save when Tape Reader Offset is highlighted
Main Landa unit Bad Integrity Data	Bad/Corrupted data packets from the Main Landa unit are being received.		• Verify the wiring of the Main Landa Sensor Unit for data and shield wires. Refer to page 6b of the prints. • Replace Main Landa wire harness to the TOC and verify operation, continue with steps below if problem persist. • Replace Main Landa Sensor Unit and verify operation, continue with step below if problem persist • Replace P-TOC board
Main Landa Unit Completely Off Rail	The Landa Tape is not aligned inside the Main Landa sensor unit; refer to page QR5 of the prints for tape installation directions.		• Main Landa Sensor Unit is misaligned and is unable to read positional data. Verify Main Landa Sensor Unit alignment. • Ensure that the tape is straight though the entire length of the hoistway and that is braced at appropriate intervals to prevent excessive drift. • Navigate to Install→View Selector Data Window and verify the Landa tape alignment while running on Inspection the entire length of the hoistway. If properly align replace the Main Landa Sensor Unit. Refer to page QR5 of the prints for tape installation directions.

Fault Message	Description	Logical Conditions	Possible Causes/ Solutions
Main Landa Unit has Invalid Data	Main Landa Sensor unit is constantly reading a position of 0.00ft, Refer to page QR5 of the prints for Landa tape installation directions.		• Navigate to Install→View Selector Data Window and verify if the Main Landa sensor unit reads a position of 0.00ft • If the position is 0.00ft, verify that the Landa tape is installed properly by ensuring that the arrows on the Landa tape are pointing in the UP direction. • If pointing down Landa tape is hanging upside down and needs to be flipped. • If arrows are located to run inside sensor unit, tape is backwards and needs to be turned. i.e. arrows need to be away from sensor unit reading area. • Refer to page QR5 of the prints for tape installation directions
Main Landa Unit Can't Read Pos. A Or Can't Read Pos. B (Pos. A: Main Landa Unit Lost 1) or (Pos. B: Main Landa Unit Lost 2)	Main Landa Sensor Unit cannot calculate the current position, clean sensor unit reading area and verify it is free from scratches, if scratched replace sensor unit.		• Clean the optical unit of any possible dirt. • Verify the direction of reading relative to code rail is correct • Verify the wire harness connection between the Landa unit and the P-TOC board is secured tightly • Verify that the plastic liner is not scratched; if it is then the unit must be replaced.
Main Landa Unit Partially Off Rain	The Landa Tape is partially misaligned inside the Main Landa Sensor unit; refer to page QR5 of the prints for tape installation directions.		• Main Landa Sensor unit is partially misaligned and is unable to read positional data. Verify the Main Landa Sensor unit alignment. • Ensure that the tape is straight though the entire length of the hoistway and that is braced at appropriate intervals to prevent excessive drift. Refer to page QR5 of the prints for tape installation directions. • Navigate to Install→View Selector Data Window and verify the Landa alignment while running on Inspection the entire length of the hoistway. If properly align replace the Auxiliary Landa Sensor unit
Main Landa Unit Checksum Error (Main Landa Unit Read Data Error)	The CRC of the data packet did not match the calculated CRC; Bad/Corrupted data packets from the Main Landa Unit are being received.		• Verify the wiring of the Main Landa Sensor unit for data and shield wires. Refer to Page 6b of the prints. • Replace Main Landa wire harness to the TOC and verify operation, continue with steps below if problem persist. • Replace Main Landa Sensor unit and verify operation, continue with step below if problem persist • Replace P-TOC board

Fault Message	Description	Logical Conditions	Possible Causes/ Solutions
Motor Limit Timeout	The car exceeded the maximum time allowed to complete a run and was shut down to prevent motor damage		• Default Motor Limit Timer Value is 3.00 min. Verify that the timer has not been adjusted to a value that is too low. Navigate to Adjust→ Car Performance→ Timers→ Controller Timers→Motor Limit Timer. Increase as necessary to allow time a complete top to bottom run plus 25%. • If the timer is set correctly verify a. Motor rotation and starter interface wiring b. Verify Valves circuits and voltages. c. Inch the car up and down at several landings, including the top and bottom, landings to make sure is able to relevel • Navigate to Troubleshoot→Event Logs → Event Playback → Standard DDR Event Play Back, to play back and analyze data collected and stored by Pixel that led to the triggering of this event. • If problem occurs while releveling a bad contact of the EB1-EB2 or EBX1-EBX2 relays may be preventing the U or D relay coil from energizing. Refer to Page 5 of the prints. Replace EB1-EB2 and EBX1-EBX2 relays
MP Board Settings CRC	The P-MP Board IP Settings are Invalid.		• Navigate to Install→File Transfer→Board Settings and perform a default on the P-MP board. Note that this will require a Computer Reset after executing the default command. • If the fault continues after the Computer Reset – Replace the P-MP Board.
MP Firmware CRC Fault	MP Internal Flash CRC did not pass, perform a USB MP software upgrade.		• If after a software update the fault persists – Replace the P-MP Board.
MP Invalid Configuration	The current configuration file on the P-MP is invalid.		• Navigate to Install→File Transfer→ System Configuration Download and try reloading a previously saved configuration file to the P-MP. • Or navigate to Install→File Transfer→ System Restore and try reloading a previously saved configuration file to the P-MP. • If no previously saved configuration file is available, contact Elevator Controls Technical Support for the default configuration for this job.

Fault Message	Description	Logical Conditions	Possible Causes/ Solutions
Pattern Error	Pattern Error is caused when Acceleration and Jerk parameters are set to values that will not allow Pixel to generate continuous speed pattern curve		• There is an issue with the parameters entered into the speed profile – Refer to Section 4.6 of the Pixel Manual for allowed Acceleration and Jerk parameters range values. • Navigate to Adjust→Ride Performance→Speed Profile and verify parameter settings
P Contactor Fault	The Po contactor output state is off but its monitored contact did not close or Po output state is on but its monitored contact did not Open, P Contactor failed to pick, drop, or it has a bad Auxiliary Contact, verify contact wired to the Pin input and Po contactor output triacs; refer to Page 4 of prints	Po = 0 Pin = 0 OR Po = 1 Pin = 1	• Verify the P Auxiliary Contacts, if loaded, are properly seated • Manually actuate the P contactor and observe the Pin input LED on the P-MPIO board turns off as contactor is pressed and turns on when released. • Verify the operation of the Pin input on the P-MPIO Board – Navigate to Troubleshoot→Flags →Safety I/O Flags and observe the Pin flag changing states in memory when the P motor contactor is manually actuated. • If the Pin flag doesn't change state in memory, but it does change state on the P-MPIO status LED – Replace the P-MPIO Board • If Pin flag does change state in memory and it matches the LED status – Navigate to Troubleshoot→Flags →Safety I/O Flags observe the Po output flag to match the Po output status LED on the P-MPIO, if it does not replace Po output triacs Q2 and Q3 on the P-MPIO Board and repeat this step. • If step above did not fix the problem, Replace the P-MPIO Board
Pit Flood Operation Complete	The Pit Flood input has been activated and the car is now at the Pit Flood recall landing.	PITI = 1	• Pit Flood input was or still is active latching the Pit Floor recall operation • Verify that the pit is not flooded. • If the pit is not flooded, verify the state of the PITI input if active, verify that the pit flood switch works correctly (measure 24VDC voltage when active, and remove the wire from PITI and see if the input goes low). • If PITI is low – Reset the condition by pressing System Fault Reset push button
Plunger Input Active	The Plunger input has been activated	PLUNGER = 1	• Plunger input was or still is active latching the Plunger input status • Verify and correct the Plunger mechanical operation • If PLUNGER input is low – Reset the condition by pressing System Fault Reset push button

Fault Message	Description	Logical Conditions	Possible Causes/ Solutions
Rear Door Bounced At Floor XX {XX = Landing number}	The rear door bounced open while the car was taking off from a floor on an automatic run	SDI Pattern = Soft Start H = 1 HI = 1 AND CGR= 0 DLKR = 1 OR CGR = 1 DLKR = 0 OR CGR = 0 DLKR=0 *DLKR flag comprises the Status of All the Rear Door Locks and Rear Door Close Contacts when the door option is configured to Freight or Manual door.	• DLKR or CGR dropped momentarily during takeoff. Navigate to Troubleshoot→Event Logs→Event Playback→Standard DDR Event Log and review the door flags for this fault to confirm which of the door signals dropped during take off • At the floor number displayed in the fault, verify the door closing adjustments prevent any door bouncing from a slammed closing • Verify that doors don't roll back or relax open on takeoff.
Rear Door Clipped At Floor XX {XX = Landing number}	The rear car gate or one of the interlocks clipped, while the car was travelling in high speed	H = 1 HI = 1 AND CGR = 0 DLKR = 1 OR CGR = 1 DLKR = 0 OR CGR = 0 DLKR=0 *DLKR flag comprises the Status of All the Rear Door Locks and Rear Door Close Contacts when the door option is configured to Freight or Manual door	• DLKR or CGR dropped momentarily while traveling on high-speed. Navigate to Troubleshoot→Event Logs→Event Playback→Standard DDR Event Log and review the door flags for this fault to confirm which of the door signals dropped during the run • At the floor number displayed in the fault, verify door clearances as the car travels through the hoistway.

Fault Message	Description	Logical Conditions	Possible Causes/ Solutions
Rear Door Limit Switches	The rear door open limit and door closed limit are both low at the same time. Rear Door limits valid states: Door Fully Open DOLR = 0, DCLR = 1 Door Fully Closed DOLR = 1, DCLR = 0 Door Partially Close-Open DOLR = 1, DCLR = 1	DOLR = 0 DCLR = 0	• DOLR and DCLR are both low in memory – Verify the current position of the doors/ verify the status of the door limits on the door operator. • If the door operator limits are in the correct state – Verify that the door limit signals are reflected correctly on the P-TOC board terminals DOLR and DCLR • If the door limits are not displayed correctly on the TOC Board – Correct/verify the door limit wiring/ setup. • Also verify that the rear door limits are mapped correctly per the print. • If the DOLR and DCLR signals seem correct on the P-TOC board – Verify that they match in memory. Navigate to Troubleshoot→Flags→Door Flags • If the door limits status on the TOC and their status in memory does not match – Then the DOLR/ DCLR inputs could be damaged. Replace the P-TOC Board or the board the inputs are mapped to.
Rear Door Locks Fault	The rear door open limit is open; indicating that the doors are fully open, but either the rear car gate or rear hoistway door locks are still closed.	DOLR = 0 CGR = 1 DLKR = 0 OR DOLR = 0 CGR = 0 DLKR = 1 OR DOLR = 0 CGR = 1 DLKR = 1	• The car gate, the door lock, or both didn't open – Verify status of DOLR, DLKR & CGR. Navigate to Troubleshoot→Flags→Door Flags and Figure out which flag is in the wrong state. • Verify that the door contacts are open by ensuring that there is no voltage on CGR or the door lock contact for that floor Refer to Page 4 of the prints • If there is no voltage but it stays high in memory – Replace either the P-MPIO Board or P-MP-REAR Board.
Rear Door Not Fully Closed	The rear door close limit is closed while the doors are locked. OR The rear door close limit is open, but either the car gate or door lock is not closed.	CGR = 1 DLKR = 1 DCLR = 1 OR CGR = 0 DLKR = 1 DCLR = 0 OR CGR = 1 DLKR = 0 DCLR = 0	• Either the rear door close limit, the car gate closed contact, or a hoistway door closed contact is in the incorrect state. – Verify which state the doors are in. Navigate to Troubleshoot→Flags→Door Flags. Verify and correct whichever flag isn't in the correct state. • Verify that the door contacts are closed by ensuring that there is voltage (120VAC) on CGR and the door lock contacts, refer to Page 4 of the prints • If there is voltage but corresponding input(s) stay low in memory – Replace the P-MP-REAR Board

Fault Message	Description	Logical Conditions	Possible Causes/ Solutions
Rear PHE Cycle Test Failed	Rear Photo Eye has failed its cycle test, test performed after the door has reached its fully opened position and before door closing starts	PHETR = 1 PHER = 0 PEMR = 0 OR PHETR = 1 PHER = 0 PEMR = 1 OR PHETR = 1 PHER = 1 PEMR = 0	• Verify the PHETR output picks the PHETR relay and verify both the PHER and the PEMR inputs come in when the PHETR relay is picked. Refer to Pages 6B and 6R of the prints • Verify that the Inputs, PHER and PEMR, and Output, PHETR, are mapped correctly in the Pixel System. Navigate to Install→IO Mapping. • **Test information detail:** Prior to the door closing PHETR output will be turned on to signal door operator to test the reopening device. Pixel will wait for about 5 seconds for PHER and PEMR inputs to become active to terminate or fail the test.
Rear PHE Fault	PHER input remained high for more than the programmed Photo Eye Fail Timer value	PHER = 1 Photo Eye Fail Timer Expired	• Verify the PHER input is not stuck in the high state by disconnecting the field wire from its assigned location and viewing the status by navigating to Troubleshoot→Flags→Door Flags • Verify the Photo Eye Fail Timer is not set too short (default value of 5 minutes) • Navigate to Adjust→Car Performance→Timers→Rear Door Timers→Photo Eye Fail
Re-Leveling Down	The car is repositioning Down into door zone center after being bounced up out of position, people walking in and out of car/ rope stretch		• Verify oil is not leaking or bypassing the valves packings. • Adjust the Releveling Timeout value to allow the car to settle before declaring the need to relevel. This helps for cases when people are walking in and out of the car. • Adjust the Releveling Offset. This will give the car a push more towards the center of the Door Zone. • If the Car is arriving to the floors correctly and not over/under shooting the floor, increase the Dead Zone. • All speed control parameters can be found by navigating to Adjust →Ride Performance→Speed Profile • Refer to controller manual for traction section 4.6 and for hydraulic to section 4.7 for detailed information on speed profile parameters description and adjustments

Fault Message	Description	Logical Conditions	Possible Causes/ Solutions
Re-Leveling Up	The car is repositioning Up into door zone center after being bounced down out of position, people walking in and out of car/ rope stretch		• Verify oil is not leaking or bypassing the valves back to the thank reservoir. • Adjust the Releveling Timeout value to allow the car to settle before declaring the need to relevel. This helps for cases when people are walking in and out of the car. • Adjust the Releveling Offset. This will give the car a push more towards the center of the Door Zone. • If the Car is arriving to the floors correctly and not over/under shooting the floor, increase the Dead Zone. • All speed control parameters can be found by navigating to Adjust →Ride Performance→Speed Profile • Refer to controller manual for traction section 4.6 and for hydraulic to section 4.7 for detailed information on speed profile parameters description and adjustments
Retiring Cam Failure	The retiring cam while picked is failing to lock the doors. The retiring cam RCO output is on, and the retiring cam timeout allowed for locking the door has expired.	RCO = 1 DLK = 0 And Retiring Cam Timer Expired	• If DLK goes high when the retiring cam is picked – Ensure that the retiring cam picks when RCO is high. • Verify setting of Retiring CAM timer, (default value of 10 seconds) • Navigate to: Adjust →Car Performance→Timers →Flags→ Front Door Timers → Retiring Cam Timer • If DLK doesn't go high when the retiring cam is picked – Verify the status of the door flags. Navigate to Troubleshoot→Flags→Door Flags. • Compare the status of the flags with the inputs shown on Page 4 of the prints. Verify which flag is stopping DLK from making up to help identify problem.
RP Sensor Drop Fault	The controller is powered up, but the RP Sensor monitored contact is not closed to feed voltage to the RGOK terminal. Refer to Pages 2 and 3 of the prints	RGOK = 0 RG = 1 RGBP = 0 Not on Battery Lowering OR RGOK = 0 RG = 0 RGBP = 1 Not on Battery Lowering (Hydraulic Only)	• Verify three phase power into controller is within 10% range, refer to page 1 of prints. • Verify reverse phase sensor unit is not tripped, if tripped; verify that fuse FGP1 is good, if fuse is good adjust the RP sensor voltage setting before replacing the RP sensor unit. • If problem remains may need to swap two lines from incoming power to get the reverse phase sensor to pick. • Note: If input lines were swapped, verify motor rotation. • If RP Sensor is active, verify RGOK input LED on the P-MPIO board to be on and its status match Pixel flag status, Navigate to Troubleshoot→Flags→Safety I/O Flags • If RGOK is high on the P-MPIO Board, but low in memory – Replace the P-MPIO Board.

Fault Message	Description	Logical Conditions	Possible Causes/ Solutions
Security Codes Invalid	Security codes read from internal flash are invalid.		• If Security Codes have been previously saved to a USB, reload saved security codes into Pixel, and perform a Computer Reset. Insert USB with the Security Codes and navigate to Install→File Transfer→Security Restore. • If the above does not work, a new set of codes needs to be entered utilizing the Security Floor Setup window (Adjust→Car Performance→Functional Options→Security→Floor Setup). • Note: A Computer Reset is required to load the Security Codes and verify the fault condition no longer exists. If the condition still exists replace the P-MP Board.
Serial COP Comm. Loss	Communication to serial COP interface has been lost.		• Verify the wiring between the P-COP board (Connector JCOP/JCOP1) and the Serial COP fixture for data and shield wires Refer to Pages 7 or 7R of the prints • If there is no Serial COP, verify the option is disabled. Navigate to Install →Basic Pixel Settings →COP Touchscreen Option and set it to "None"
Service Request	Service Timer has expired and needs to be renewed		• Navigate to Install→Initial Settings→Password Access and enter the service request password
Slowdown Overspeed	Car speed exceeded the learned terminal landings speed profile, perform a new slowdown speed learn if any speed parameters have been modified		• At a terminal slowdown, the car was travelling faster than the learned approach speed profile. • If any changes were made that could affect the speed of the car – An ETS Learn in both directions must be completed. Navigate to Install→Learn Functions→ETS Learn
SP1 Aux Selector Comm Failed	Unable to establish communications between the SP1 and the Auxiliary Landa Sensor Unit, verify traveler wiring from the Controller to TOC and the TOC to Landa. Refer to pages 6 & 6b of the prints		• Verify Auxiliary Selector Status Good versus Bad counts. Navigate to Troubleshoot→Controller Network→Auxiliary Selector • If there are more Bad counts versus Good counts, verify traveler wiring from controller to TOC and from the TOC to Landa. • If there are Good Counts only – Replace the P-MPIO Board.
Landa Aux. Sensor Unit Fault (SP1 Aux Vend. Fault)	Safety Processors are reporting a fault being generated by the Auxiliary Landa Sensor Unit		• Navigate to Install→View Selector Data and verify which of the faults is being reported. • If no faults are being reported – Replace the P-MPIO Board. • If a fault is being reported seek guidance under Fault Message description in this document

Fault Message	Description	Logical Conditions	Possible Causes/ Solutions
SP1 Both Main Aux Sel Fault (SP1 Both Main and Aux Vend Fault)	Safety Processors are reporting a fault being generated by the Main and Auxiliary Landa Sensor Units		• Navigate to Install→View Selector Data and verify which of the faults is being reported. • If no faults are being reported – Replace the P-MPIO Board. • If a fault is being reported seek guidance under Fault Message description in this document
Landa Main Sensor Unit Fault (SP1 Main Vend. Fault)	Safety Processors are reporting a fault being generated by the Main Landa Sensor Unit		• Navigate to Install→View Selector Data and verify which of the faults is being reported. • If no faults are being reported – Replace the P-MPIO Board. • If a fault is being reported seek guidance under Fault Message description in this document
SP1 Comm. Failed	Unable to establish SPI Communications between the P-MP and the SP1		• Navigate to Troubleshoot→ Controller Network and select SP1 to verify communications good counts. • Navigate to Troubleshoot→About and verify the SP1 Software Version Number is not 0.0.0.0. • If there are no good counts or the Version Number is 0.0.0.0, perform an individual software update to the SP1. • If the fault continues – Replace P-MPIO Board.
SP1 Invalid Configuration	The current configuration file for the Safety Processors is invalid. Perform a Safety Configuration Upload		• Navigate to Install → File Transfer (must be on Construction or Machine Room Inspection to enable) • Wait for the 10 second count down to complete • Select Safety Configuration Upload and perform a Transfer. • Once the Transfer is complete, hit the home button • If the Fault remains, replace the P-MPIO Board.
SP1 Main Selector Comm. (SP1 Main Sel Fault)	Unable to establish communications between the SP1 and the Main Landa Sensor Unit, verify traveler wiring from the Controller to TOC and from the TOC to Landa. Refer to Pages 6 and 6b of the prints		• Verify Main Selector Status Good versus Bad counts. Navigate to Troubleshoot→Controller Network→Main Selector • If there are more Bad counts versus Good counts, verify traveler wiring from controller to TOC and from the TOC to Landa. • If there are Good Counts only – Replace the P-MPIO Board.

Fault Message	Description	Logical Conditions	Possible Causes/ Solutions
SP1 Landa Main Sensor Unit Fault (Landa Main Sensor Unit)	SP1Safety Processors is reporting a fault being generated by the Main Landa Sensor Unit		• Navigate to Install→View Selector Data and verify which of the faults is being reported. • If no faults are being reported – Replace the P-MPIO Board. • If a fault is being reported seek guidance under Fault Message description in this document
SP MP Configuration Mismatch (SP1 MP Configuration Mismatch)	The main processor configuration file does not match the configuration file on the safety processors. Perform a Safety Configuration Upload.		• SP and MP Configuration files do note match • Navigate to Install → File Transfer (must be on Construction or Machine Room Inspection to enable) • Wait for the 10 second count down to complete • Select Safety Configuration Upload and perform a Transfer. • Once the Transfer is complete, hit the home button • If the Fault remains, replace the P-MPIO Board.
SP1 and SP2 IO Mismatch	A mismatch has occurred in the Safety IO status between the SP1 and SP2 Safety Processors		• Navigate to Troubleshoot→Controller Network and verify the SP1 and SP2Good Counts only are incrementing • If only one of the SP1 or SP2 Bad Counts is incrementing replace the P-MPIO Board. • If both Bad Counts are incrementing, then replace both the P-MP and P-MPIO boards. • Navigate to Troubleshoot→Flags→Safety IO Flags to verify which input or output status is in conflict. This will be shown with a different color other than Black or Blue for the current status. • If they are in conflict, perform a Computer Reset; if conflict remains, replace P-MPIO Board.
SP2 Comm. Failed	Unable to establish SP1 Communications between the P-MP and the SP2		• Navigate to Troubleshoot→ Controller Network and select SP2 to verify communications good counts. • If there are no good counts, try to do an individual software update to the SP2. • If the fault continues – Replace P-MPIO Board.
TOC Comm. Failed	Unable to maintain CAN Communications between the MP and the TOC. Refer to Page 6 of the prints to verify CAB CAN network wiring.		• Verify traveler wiring from the Controller to the TOC • Make sure CAN-H and CAN-L are wired properly and the connections are done to the CAB CAN on the JTRAV connector.

Fault Message	Description	Logical Conditions	Possible Causes/ Solutions
U Relay Monitor (U Relay Fault)	The UNL-URM input is on while U relay output is off indicating U Relay contact 1 failed to break open, possibly due to a bad U relay. Refer to Page 1 of the prints Or The UNL-URM input is off while U relay output is on indicating U Relay contact 1 failed to close, possibly due to a bad U relay. Refer to Page 1 of the prints.	UNL-URM = 1 SU = 0 Or UNL-URM = 0 SU = 1	• Bad contact on the U relay – Replace the U relay, refer to page 1 of the prints • UNL-URM input may have failed – Verify that URM flag is changing states in memory. Navigate to Troubleshoot → Flags → Safety I/O Flags and confirm that the URM input flag changes states in memory when U relay is removed, if it does not replace the P-MPIO board • If problem occurs while taking off a bad contact of the EB1-EB2 or EBX1-EBX2 relays may be preventing the U relay coil from energizing. Refer to Page 5 of the prints. Note: If EB1-EB2 or EBX1-EBX2 relays are the source of the fault, momentarily the U, D and H Led outputs only, may appear to be on simultaneously prior to fault declaration. Replace EB1-EB2 and EBX1-EBX2 relays
UIM Bypass Enabled	The UIM Bypass option is not allowed during Automatic Operation, reset the UIM Bypass option	UIM Bypass = On	• The UIM Bypass Option is set to yes while the car is on automatic operation. • Navigate to Install → Code Compliance Test → Unintended Movement → Unintended Movement Bypass and set it to no.

Fault Message	Description	Logical Conditions	Possible Causes/ Solutions
Unable to Close Front Door	Unable to close the front door after the programmed number of allowable attempts.	DCLF = 1 DCFF = 1 Door Close Protection Timer Expired And Closing attempts = number of attempts allowed by the Closing Attempts Fault Counter	• Verify the doors are not blocked. • Verify Door Close protection timer (default 30 seconds) is set properly. Navigate to Adjust →Car Performance →Timers→ Front Door Timers→ Close Protection • Verify Door Closing attempts (default 10 attempts) is set properly. Navigate to Adjust →Car Performance →Door Options→ Closing Attempts Fault Counter • If the doors are not blocked but are physically open – Verify that the DCFF signal is making it to the door operator. (Page 6b of prints) • If the doors are physically closing, verify that the door close limit is functioning correctly. The DCLF input should open when the door close limit breaks. • Verify that the DCLF LED on the P-TOC board turns off as the doors reach their closed limit position; if it does not turn off adjust the limit position. • If the door close limit is functioning correctly, verify that DCLF is changing states in memory. Navigate to Troubleshoot→Flags→Door Flags and confirm that the state of DCLF in memory is reflected correctly, low when doors are fully closed otherwise high. • If DCLF is incorrect in memory, but the LED input status is correct, replace the P-TOC Board

Fault Message	Description	Logical Conditions	Possible Causes/ Solutions
Unable to Close Rear Door	Unable to close the rear door after the programmed number of allowable attempts.	DCLR = 1 DCFR = 1 Door Close Protection Timer Expired And Closing attempts = number of attempts allowed by the Closing Attempts Fault Counter	• Verify the doors are not blocked. • Verify Door Close protection timer (default 30 seconds) is set properly. Navigate to Adjust →Car Performance →Timers→ Rear Door Timers→ Close Protection • Verify Door Closing Attempts (default 10 attempts) is set properly. Navigate to Adjust →Car Performance →Door Options→ Closing Attempts Fault Counter • If the doors are not blocked but are physically open – Verify that the DCFR signal is making it to the door operator. (Page 6b of prints) • If the doors are physically closing, verify that the door close limit is functioning correctly. The DCLR input should open when the door close limit breaks. • Verify that the DCLR LED on the P-TOC board turns off as the doors reach their closed limit position; if it does not turn off adjust the limit position. • If the door close limit is functioning correctly, verify that DCLR is changing states in memory. Navigate to Troubleshoot→Flags→Door Flags and confirm that the state of DCLR in memory is reflected correctly; low when doors are fully closed, otherwise high. • If DCLR is incorrect in memory, but the LED input status is correct, replace the P-TOC Board

Fault Message	Description	Logical Conditions	Possible Causes/ Solutions
Unable to Open Front Door	Unable to open the front door before the Door Open Protection Timer expired.	DOLF = 1 DOFF = 1 Door Open Protection Timer Expired	• Confirm whether or not the doors actually attempt to open. • If the doors do not physically open, verify that the DOFF signal is actually reaching the door operator. (Page 6b of Prints) • If the doors are physically opening, verify that the door open limit is functioning correctly. The DOLF input should open when the door open limit breaks. • Verify that the DOLF LED on the P-TOC board turns off as the doors reach their open limit position; if it does not turn off adjust the limit position • If the door open limit is functioning correctly, verify that DOLF is changing states in memory. Navigate to Troubleshoot →Flags→Door Flags and confirm that the state of DOLF in memory is reflected correctly; low when doors are fully open, otherwise high. • If DOLF is incorrect in memory, but the LED input status is correct, replace the P-TOC Board
Unable to Open Rear Door	Unable to open the rear door before the Door Open Protection Timer expired.	DOLR = 1 DOFR = 1 Door Open Protection Timer Expired	• Confirm whether or not the doors actually attempt to open. • If the doors do not physically open, verify that the DOFR signal is reaching the door operator. (Page 6b of Prints) • If the doors are physically opening, verify that the door open limit is functioning correctly. The DOLR input should open when the door open limit breaks. • Verify that the DOLR LED on the P-TOC board turns off as the doors reach their open limit position; if it does not turn off adjust the limit position • If the door open limit is functioning correctly, verify that DOLR is changing states in memory. Navigate to Troubleshoot →Flags→Door Flags and confirm that the state of DOLR in memory is reflected correctly; low when doors are fully open, otherwise high. • If DOLR is incorrect in memory, but the LED input status is correct, replace the P-TOC Board

Fault Message	Description	Logical Conditions	Possible Causes/ Solutions
Un-Intended Movement	Car moved out of the door zone area with both the car gate and the hoistway doors open	DZ = 0 CGF = 0 DLKF = 0 OR DZ = 0 CGR = 0 DLKR = 0	• Verify break operation and adjust as necessary. • Verify the car does not roll back excessively or bounce up and down at a landing as passengers enter or exit the cab • Verify Level Zone setting, Navigate to Adjust →Ride Performance →Speed Profile →Level Zone and increment value from 0.5 to 0.83Ft to open your door zone area from 2 to 4 inches in each direction then refer to traction manual section 4.7.6.5 Improve Re-Leveling Performance for releveling adjustment directions. • Verify and adjust drive performance to prevent excessive roll back while performing a re-leveling run.
Virtual Down Terminal Open	Car traveled beyond the learned Down Terminal Position preventing car from continue moving in the down direction.	DNL = 0	• Verify the Car's current position vs. the learned DNL position Navigate to Install→Learn Functions→Limit Switches • If the car is below the DNL value – Then run the car up on inspection • Verify the learned position for the bottom landing to be 0.2 feet above the DNL position, • If it is not performing a bottom landing position learn and verify all other landing positions, refer to Floor Set Up section of the controller manual for directions for learning landing positions.
Virtual Up Terminal Open	Car traveled beyond the learned-Up Terminal Position preventing car from continue moving in the up direction.	UNL = 0	• Verify the Car's current position vs. the learned UNL position Navigate to Install→Learn Functions→Limit Switches • If the car is above the UNL value – Then run the car down on inspection • Verify the learned position for the top landing to be 0.2 feet below the UNL position, • If it is not performing a top landing position learn and verify all other landing positions, refer to Floor Set Up section of the controller manual for directions for learning landing positions.

Section 8 –
Intentionally Left Blank

Section 9 – Maintenance

9.1 Maintenance

The Pixel elevator controller has been designed to require as little routine maintenance as possible. In fact, mechanical interconnections are the least reliable portion of the solid-state system, so the less they are disturbed the more likely the system is to continue to function properly.

The elevator itself, however, is a complex mechanical apparatus that requires routine preventive maintenance. This includes lubrication of various moving parts, and regular cleaning and inspection of door lock contacts, since exposed contacts are susceptible to dirt and corrosion. Doors themselves receive a lot of wear, since they often make two or three cycles at each floor. Rotating machinery, including belts and couplings, should be routinely inspected for wear.

If the elevator system develops intermittent problems, or fails to operate, refer to the Troubleshooting guide in Section 7 of this manual.

9.2 Replacement Parts List

9.2.1 Elevator Controls PC Boards

a.	**MP**	Pixel microprocessor board
b.	**MP-IO**	Pixel safeties input-output board
c.	**MP-TOC**	Pixel top of the car microprocessor board
d.	**MP-COP**	Pixel COP microprocessor board
e.	**HALL**	Pixel hall node board
f.	**CN-EX**	Pixel general purpose16 IO expander board
g.	**PDBH**	Pixel power distribution board for Hydro

9.2.2 Relays

K10P-11A15-120	Tyco Electronics Four pole ice-cube 120 VAC coil
RU4S-C-A110	Tyco Electronics Four pole ice-cube 120 VAC coil
CA7-16-01	Sprecher+Schuh Contactor 120 VAC coil

9.2.3 Fuses

AGC ¼, 1, 2, 3, 5, 6,10, 15 AMP 250VOLT
MDA TYPE 3, 5, 10 & 15 AMP 250 VOLT
FRN-R 10, 20, 30, 60 AMP 250 VOLT (208 to 240 VAC power supply)
FNQ 5, 10, 15A 500 VOLT (440 to 480 VAC power supply)

9.2.4 Modules

Switching Power Supply	SPD24120, C.G. 24 VDC-5 Amps
Landa Sensor Head	WCS3 Pepperel+Fuchs
CEDES APS Camera	CEDES APS Camera System

9.2.5 Semiconductors

Bridge Rectifier	35A 1000V	MB3510 Motorola
Triac **Triac Housing**	16A 800V	BTA16-800CW3G ST TO220AB
Triac **Triac Housing**	4A 800V	T405-800T ST TO220AB

Appendix D –

Mnemonic Description Translation Tables

The Mnemonic may represent a Computer Input “I”, Output “O”, or an internally generated flag “F”. Each table below represents a group of mnemonics associated with a screen shot on Pixel Display.

NOTE: Some flags appear duplicated on several screens; this is done to facilitate troubleshooting while observing flags behavior.

Safety I/O Flags

Name	I/0/F	Description
GOV	I	Governor Switch
SAFC	I	Car Safety String
SAFH	I	Hoistway Safety String
ESTP	I	Emergency Stop Switch
UNL	F	Up Normal Limit Position
DNL	F	Down Normal Limit Position
DSAF	I	Drive Safety
RG	I	EB1-EB2 Contacts Monitor
RGBP	I	EBX2-EBX2 Contacts Monitor
RGOK	I	Rope Gripper Contact
TTM	I	Not currently used
BTM	I	Not currently used
STOP	I	AA Contactor Monitored Contact
Pin	I	P Contactor Monitored Contact
BKi	I	BK Contactor Monitored Contact
AAi	I	AA Contactor Output monitor
Pi	I	P Contactor Output monitor
BPI	I	Brake Picked Contact
mFRST	I	Logic Microprocessor Fault Reset
sFRST	I	Safety Processors Fault Reset
EQR	I	Earthquake Reset Push Button
STPPD	F	Car Stooped
SOvrd	F	Landa Position Override
DirOK	F	Pattern and Car Movement Agree
BK	O	BK Contactor Output
BH	O	BH Relay Output
BPWN	O	Brake Failed to Pick Warning Ind.
ESCO	O	Emergency Stop Override
MFPF	F	Motor Field Weakening Enabled
-	-	
AAo	O	AA Contactor Output
Po	O	P Contactor Output
EB1	O	EB1 Relay Output
EB2	O	EB2 Relay Output
EBX1	O	EBX1 Relay Output
EBX2	O	EBX2 Relay Output

Door Flags

Name	I/0/F	Description
DLAT	I	Door Lock Access Top
DLAB	I	Door Lock Access Bottom
DCAT	I	Door Closed Access Top
DCAB	I	Door Closed Access Bottom
NUDG	0	Nudging output Active
DLK	F	DLKF and DLKR both closed
CGF	I	Car Gate Front
DLSF	I	Int. Door Locks Front Closed
DCSF	I	Int. Door Closed Contacts Front Closed
DCLF	I	Door Close Limit Front
DOLF	I	Door Open Limit Front
DLKF	F	Front Door Locks & Contacts Closed
CGR	I	Car Gate Rear
DLSR	I	Int. Door Locks Rear Closed
DCSR	I	Int. Door Closed Contacts Rear Closed
DCLR	I	Door Close Limit Rear
DOLR	I	Door Open Limit Rear
DLKR	F	Rear Door Locks & Contacts Closed
PHEF	I	Photo Eye Front
SEF	I	Safety Edge Front
DHDF	I	Door Hold Button Front
PHER	I	Photo Eye Rear
SER	I	Safety Edge Rear
DHDR	I	Door Hold Button Rear
DCBF	I	Door Close Button Front
DCFF	O	Door Close Function Front
DCPF	F	Door Close Power Front
DOBF	I	Door Open Button Front
DOIF	F	Door Open Intent Front
DOFF	O	Door Open Function Front
DCBR	I	Door Close Button Rear
DCFR	O	Door Close Function Rear
DCPR	F	Door Close Power Rear
DOBR	I	Door Open Button Rear
DOIR	F	Door Open Intent Rear
DOFR	O	Door Open Function Rear

Inspection Flags

Name	I/0/F	Description
ICT	I	Car Top Inspection
ICTE	I	Car Top Inspection Enable
ICTU	I	Car Top Inspection Up
ICTD	I	Car Top Inspection Down
HDB	I	Hoistway Door Bypass
CDB	I	Car Door Bypass
IIC	I	In Car Inspection
IICE	I	In Car Inspection Enable
IICU	I	In Car Inspection Up
IICD	I	In Car Inspection Down
SAFH	I	Car Safety String
SAFC	I	Hoistway Safety String
IA	I	Access Inspection
IATU	I	Top Access Up
IATD	I	Top Access Down
IABU	I	Bottom Access Up
IABD	I	Bottom Access Down
IAOZ	F	Cab Outside Access Zones
IMR	I	Machine Room Inspection
IMRE	I	Machine Room Inspection Enable
IMRU	I	Machine Room Inspection Up
IMRD	I	Machine Room Inspection Down
RC	O	Retiring Cam Output Front
RCR	O	Retiring Cam Output Rear
DCLF	I	Door Close Limit Front
CGF	I	Car Gate Front
DLKF	F	Front Door Locks & Contacts Closed
DPMF	I	Door Position Front
DCFF	O	Door Close Function Front
DBF	O	Door Boost Function Front
DCLR	I	Door Close Limit Rear
CGR	I	Car Gate Rear
DLKR	F	Rear Door Locks & Contacts Closed
DPMR	I	Door Position Rear
DCFR	O	Door Close Function Front
DBR	O	Door Boost Function Rear

Emergency Service Flags

Name	I/0/F	Description
FON2	I	Alternate Fire Recall Switch
RES	I	Main Fire Recall Switch Reset Position
FOFF	I	Main Fire Recall Switch Off Position
FON	I	Main Fire Recall Switch On Position
FRA	I	Alternate Fire Recall Smog Detectors
FRS	I	Main Fire Recall Smog Detectors
HF1	I	Hoistway Smog Detectors Main Recall
HF2	I	Hoistway Smog Detectors Alt. Recall
FCS	I	Fire Phase 2 Switch On Position
F2OFF	I	Fire Phase 2 Switch Off Position
FCC	I	Fire Phase 2 Car Call Cancel
FDHD	I	Fire Phase 2 Switch Hold Position
FS1	O	Fire Phase 1 Output
85X	O	Fire Service Hat Indicator
FWI	O	Fire Warning Buzzer
CSAM	O	Canada Main Fire Indicator Output
CSAA	O	Canada Alternate Fire Indicator Output
CSB	F	Car Stop Bypass
HIS	I	Hospital Service Request
HSW	I	Hospital Service In Car Switch
HSEL	I	Car Selected for Hospital Service
ESTD	F	Emergency Slowdown Table Done
EmrSD	F	Emergency Slowdown Active
AUTOs	F	Car is on Automatic Mode of Operation
EMT	I	Mass. Emergency Medical Svc. Request
EMTI1	I	Mass. Emergency MedicalPhase1
EMTI2	I	Mass. Emergency Medical Phase2
EMTp1	O	Mass. Emergency Medical Phase1 Ind.
EMTp2	O	Mass. Emergency Medical Phase2 Ind.
EPS	F	Emergency Power Selected to Run
EPI	I	Emergency Power Active
EPPT	I	Emergency Power Pre-Transfer
CSI	I	Car Selected to Run on Emergency Pwr.
EPR	F	Car Running W/ Emergency Power
EP1	O	Emergency Power Phase1 Ind.
EP2	O	Emergency Power Phase2 Ind.

Motion Control Flags

Name	I/0/F	Description
SU	F	Car Intention to Run Up
SD	F	Car Intention to Run Down
RSU	F	Car Run Up
RSD	F	Car Run Down
SUA	O	Up Arrow
SDA	O	Down Arrow
HD	F	High Speed Delay
STU	F	Step Up
ISTU	F	Intermediate Step Up
STD	F	Step Down
ISTD	F	Intermediate Step Down
STC	F	Stepping Complete
H	F	High Speed
HI	F	High Intermediate Speed
RL	F	Car Releveling
LU	F	Car Leveling Up
LD	F	Car Leveling Down
RUN	F	Car in Motion
LVL	F	LU or LD
DZ	F	Car Inside Door Zone
TFX	F	Stepping Transfer Function
CSB	F	Car Stop Switch Bypass
EQS	I	Earthquake Operation Mode Active
MLT	F	Motor Limit Time Out
DMU	F	Demand Up
UPD	F	Up Previous Direction
UDP	F	Demand Up Previous Demand
FLU	F	Fudge Leveling Up
FLD	F	Fudge Leveling Down
PTR	F	Car Has Permission to Run
DMD	F	Demand Down
DPD	F	Down Previous Direction
DDP	F	Demand Down Previous Demand
ArRLU	F	Armed Releveling Up
ArRLD	F	Armed Releveling Down
DRun	F	Drive in Running Mode

Call Demand Flags

Name	I/0/F	Description
CCA	F	Car Call Above Car
CCB	F	Car Call Below Car
UPF	F	Up Front Hall Call
UPR	F	Up Rear Hall Call
DNF	F	Down Front Hall Call
DNR	F	Down Rear Hall Call
CCCIF	F	A Car Call Front Being Pressed
CCCIR	F	A Car Call Rear Being Pressed
UCAX	I	Up Hall Call Above Car
UCBX	I	Up Hall Call Below Car
DCAX	I	Down Hall Call Above Car
DCBX	F	Down Hall Call Below Car
CCF	F	Car Call Cancel Front
CCR	F	Car Call Cancel Rear
UCF	F	Up Call Cancel Front
UCR	F	Up Call Cancel Rear
DNCF	F	Down Call Cancel Front
DNCR	F	Down Call Cancel Rear
CCD	F	Car Call Disconnect
HCR	0	Hall Call Reject
HCD	F	Hall Call Disconnect
LCD	F	Lobby Call Disconnect
LT	F	Lobby Door Timer
TOS	F	Car Timed Out of Service
SDTF	F	Short Door Timer Front
CCTF	F	Car Call Door Timer Front
CCTR	F	Car Call Door Timer Rear
HCTF	F	Hall Call Door Timer Front
ADACF	F	A.D.A. Car Call Timer Front
ADAHF	F	A.D.A. Hall Call Timer Front
ISR	F	Car In Service and Ready
ISRT	F	Car Truly In Service and Ready
ISV	F	Car In Service
HCTR	F	Hall Call Door Timer Rear
ADACR	F	A.D.A. Car Call Timer Rear
ADAHR	F	A.D.A. Hall Call Timer Rear

Services Flags

Name	I/0/F	Description
LLI	I	Light Load Weight in Cab
HLI	I	Heavy Load Weight in Cab
OLI	I	Overload Weight in Cab
DRLW	F	Directional Load Weight
DCWB	O	Door Close Warning Buzzer Font
DCWBR	O	Door Close Warning Buzzer Rear
iCWI	I	Counterweight Derail Input
iEQI	I	Seismic Detected Input
eCWI	F	Latched Counterweight Derail Input
eEQI	F	Latched Seismic Detected Input
CWI	F	iCWI + eCWI
EQI	F	iEQI + eEQI
EQA	F	Earthquake Abnormal Mode
EQN	F	Earthquake Normal Mode
EQS	F	Earthquake Operation Mode Active
STRE	I	EQ Counterweight Stop Timer
EQR	I	Earthquake Reset Push Button
ACS	I	Alternate Call Scheme Selected
PGO	O	Passing Gong Output
PGI	I	Passing Gong Enable Input
MLT	F	Motor Limit Timeout
OOS	F	Car Out of Service
HOBF	I	Hoistway Door Open Button Front
HOBR	I	Hoistway Door Open Button Rear
RepoC	F	Car Repositioning to a Landing
CTL	I	Car to Lobby
EGR	I	Emergency Recall Command Active
BTR	I	Traction Battery Rescue Mode
HCBF	I	Hoistway Door Close Button Front
HCBR	I	Hoistway Door Close Button Rear
WILD	F	Car in Back Up Dispatch Mode
SAB	I	Car in Sabbath Dispatch Mode
IND	I	Independent Service
IRSU	I	Rescue Operation Mode Active
HSBF	I	Hoistway Door Stop Button Front
HSBR	I	Hoistway Door Stop Button Rear

Dispatching Flags

Name	I/0/F	Description
BAL	I/F	Balance Demand
INT	I/F	Intermittent Demand
DDP	I/F	Demand Down Peak
LUP	I/F	Lobby Up Peak
DUP	I/F	Demand Up Peak
RESs	I	Fire Service Recall Sw. Reset “System”
FOFFs	I	Fire Service Recall Sw. Off “System”
FONs	I	Fire Service Recall Sw.On “System”
FON2s	I	Fire Service Recall 2 Sw. On “System”
EPIs	I	Emergency Power “System”
AUTOs	I	Emergency Power Auto-select
EP1s	O	Emergency Power Phase 1 “System”
EP2s	O	Emergency Power Phase 2 “System”
HSIs	F	Hospital Service Request “System”
ACSs	I/F	Alternate Call Scheme Dispatch Mode
HCDD	F	Hall Call Disconnect “System”
AII	F	All Cars in Service
NCII	F	No cars in Service
ECS1	I/F	Car 1 Selected to Run on Emergence Pwr.
ECS2	I/F	Car 2 Selected to Run on Emergence Pwr.
ECS3	I/F	Car 3 Selected to Run on Emergence Pwr.
ECS4	I/F	Car 4 Selected to Run on Emergence Pwr.
ECS5	I/F	Car 5 Selected to Run on Emergence Pwr.
ECS6	I/F	Car 6 Selected to Run on Emergence Pwr.
Hsel1	F	Car 1 Selected to Run Hospital Service
Hsel2	F	Car 2 Selected to Run Hospital Service
Hsel3	F	Car 3 Selected to Run Hospital Service
Hsel4	F	Car 4 Selected to Run Hospital Service
Hsel5	F	Car 5 Selected to Run Hospital Service
Hsel6	F	Car 6 Selected to Run Hospital Service
PTR1	F	Car 1 Has Permission to Run
PTR2	F	Car 2 Has Permission to Run
PTR3	F	Car 3 Has Permission to Run
PTR4	F	Car 4 Has Permission to Run
PTR5	F	Car 5 Has Permission to Run
PTR6	F	Car 6 Has Permission to Run

Appendix E –

CEDES APS Positioning System

The CEDES APS positioning system provides Pixel with an absolute position, through the entire length of the hoistway utilizing a dual camera system which scans the code tape with its own IR illumination, with a resolution 0.5 mm, approximately 1/10th of an inch. A system view diagram of the Absolute Position System Selector is shown below:

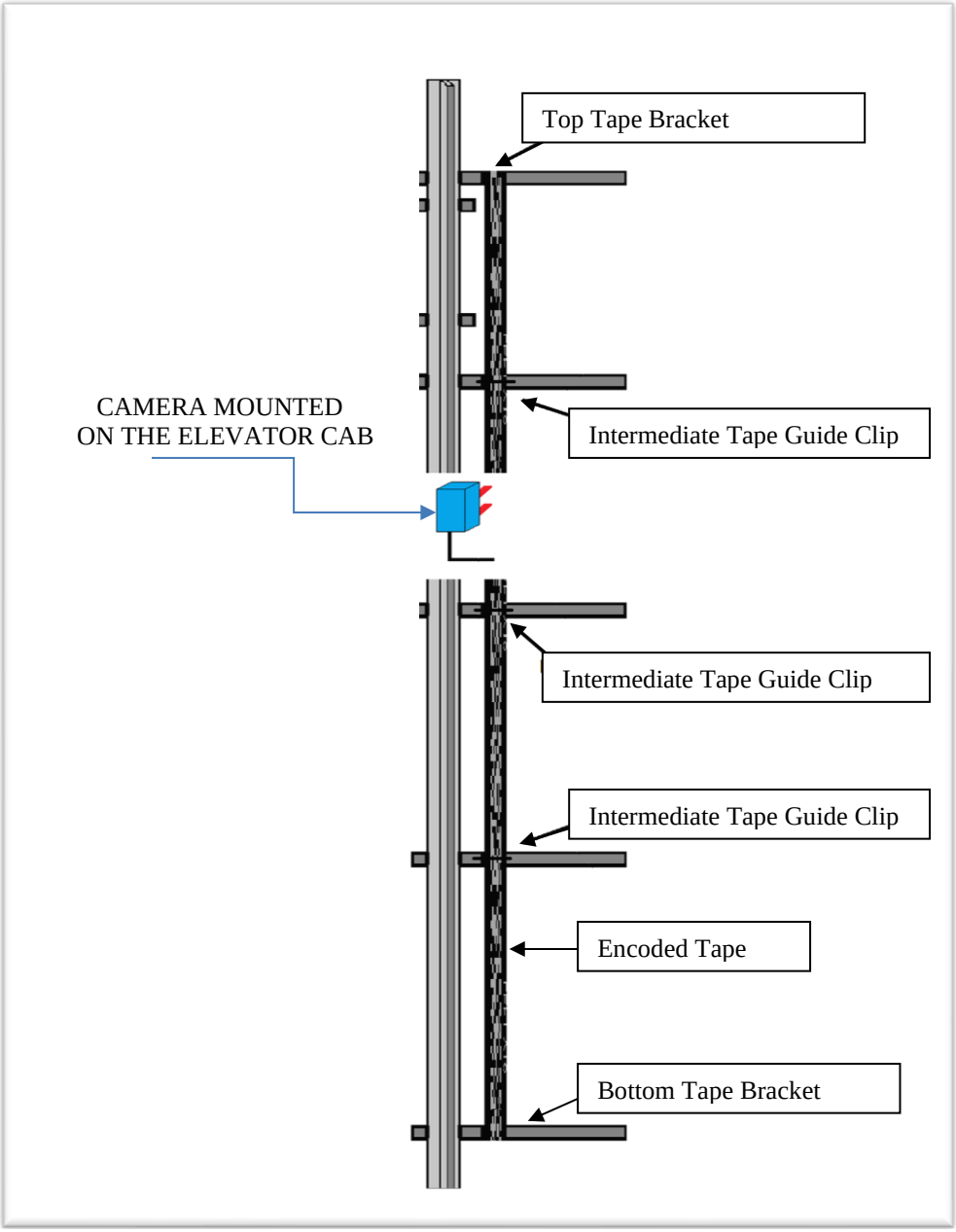

CEDES APS Absolute Position System Selector Overview

E1 Install CEDES APS Positioning System

Step 1: Mount top bracket and connect the optical absolute encoded tape

- Mount the top J-hook selector bracket to the rail.
- Make sure the bracket is high enough that when the car is all the way at the top, the tape can still be read by the camera and the bracket is not hit by any part of the elevator.
- Connect the encoded tape to the Top Tape Bracket. See Figure E1.1.
- Make sure you feed the tape through the front side of the bracket first, the side facing the car and then bend it around the top and lace it back down. See Figure E1.2
- Fasten it down with the supplied bracket and screws.



Figure E1.1: Top Tape Bracket

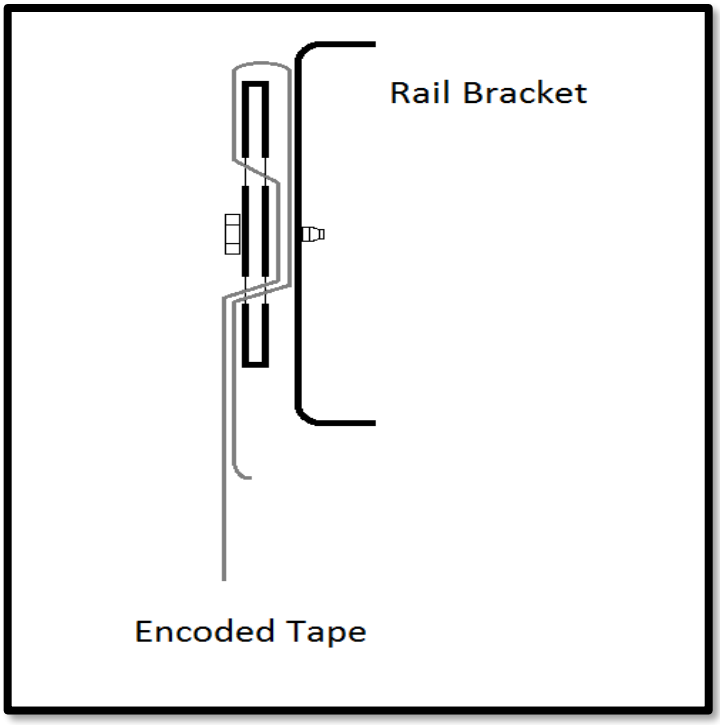

Figure E1.2: Encoded Tape Connected to Top Tape Bracket

Step 2: Run down on inspection while unrolling the absolute encoded tape.

- Run down on inspection while unrolling the tape. See Figure E1.3.
- Make sure you do not kink the tape or bend it in too tight of a radius. The tape can be damaged, and it should be handled with care.
- Make sure your hands are clean and you do not leave any grease or dirt on the front of the tape.

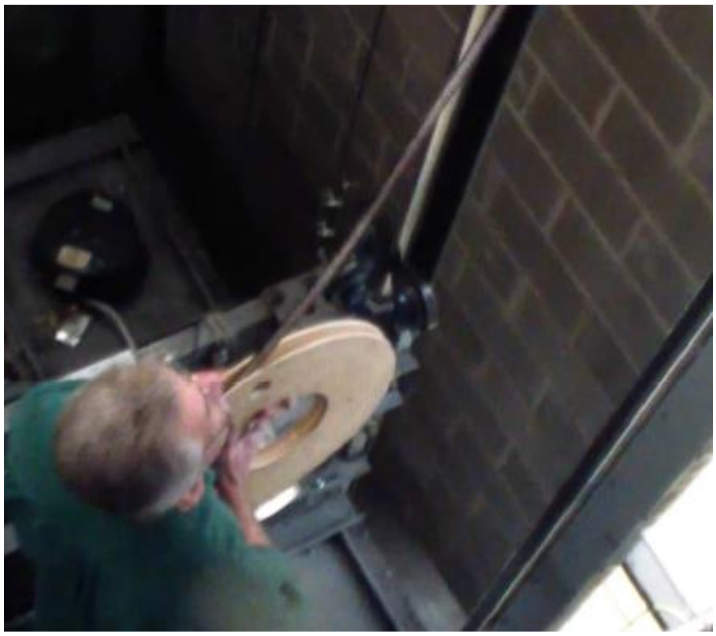

Figure E1.3: Unroll the tape

Step 3: Mount the bottom bracket and connect the absolute encoded tape.

- Mount the bottom selector bracket.
- Make sure the bracket is low enough, that when the car all the way at the bottom, the camera can still read the tape and the bracket is not hit by any part of the elevator. See Figure E1.4.
- Connect the encoded tape the rail bracket with the slack tape switch.
- Make sure you feed the tape through the front side of the bracket, the side facing the car, first and then bend it back up toward the back of the tape. See Figure E1.5
- Push the bracket down until the springs are depressed to the mark, this will put the equivalent of a 10kg weight. See Figure E1.6.



Figure E1.4: Bottom Tape Bracket

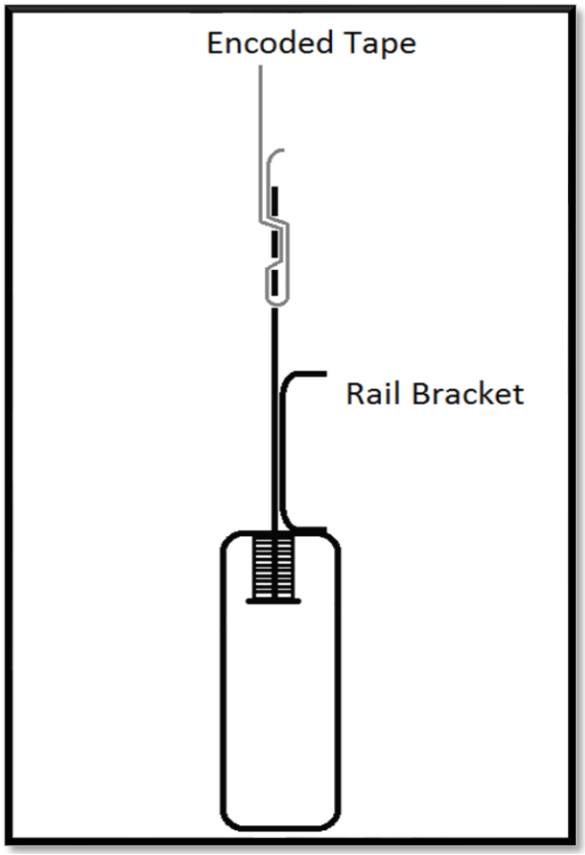

Figure E1.5: Encoded Tape connection.

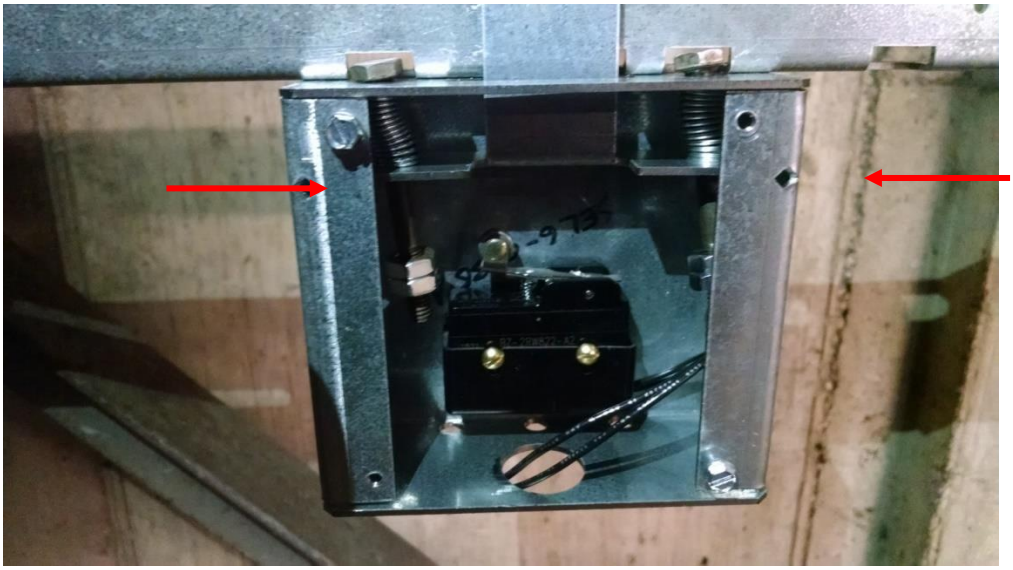

Figure E1.6: Bottom Tape Bracket with springs depressed to the mark

Step 4: Mount the CEDES APS camera mounting bracket to the cross head.

- Mount the CEDES APS camera mounting bracket to the cross head.
- Use the roller or slide shoe guide bolts to hold the camera bracket. The face of the bracket should be about 5 ½ inches from the back of the rail. See Figure E1.7.
- The back of the bracket should be as close as possible to the crosshead channel.
- Use a level and make sure it is plumb up and down.



Figure E1.7: CEDES APS Camera Mounting Bracket

Step 5: Mount the CEDES APS Camera.

- Mount the camera on the mounting bracket. The camera should be centered with the encoded channel on the tape.
- The face of the camera should be 4 inches from the face of the tape. See Figure E.1.8.

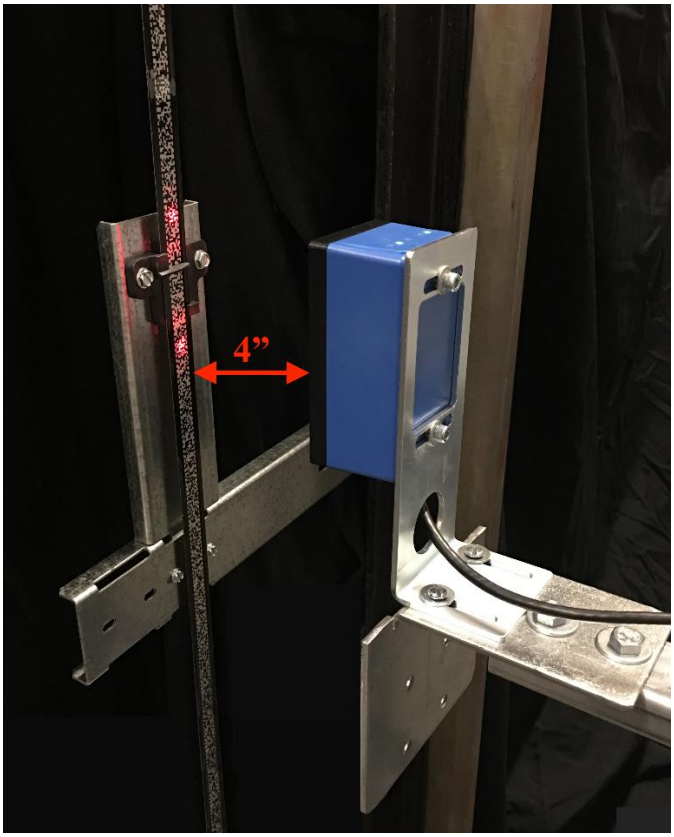

Figure E1.8: Camera 4 inches from tape

Step 6: Connect the CEDES APS Camera to APSC RJ45 Splitter in the TOC box

Electrical connection for power and communications to the CEDES APS Camera is achieve through an RJ45 cable, prewired to the ASP Camera with an RJ45 connector to be plugged into the ASPC RJ45 cable splitter located inside the P-TOC box, refer to page QR3 of the prints for a descriptive diagram.

Step7: Fine adjustment of the Camera

- Make the fine adjustment of the camera using the LED’s on top the camera, adjust the camera position so only the green light in the middle of the 4 red arrows is on, manipulate per adjustments shown in Figure E.1.9 below.

- Put your hand in front of the camera for 5 seconds. Remove your hand from in front of the camera. You should see 2 LED's on the encoded tape. Adjust the camera so the LED's are in the center of the encoded tape.

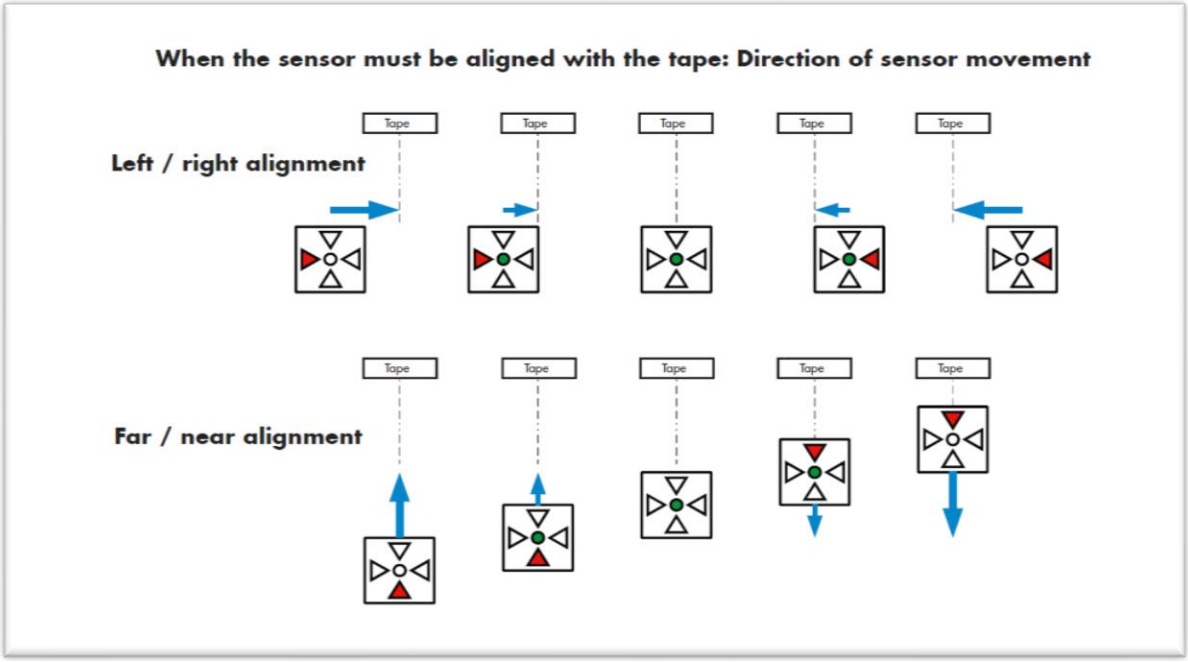

Figure E.1.9: Camera Sensor Alignment

- Level the camera with a leveling device, the CEDES APS camera must be mounted to be parallel and square to the encoder tape.

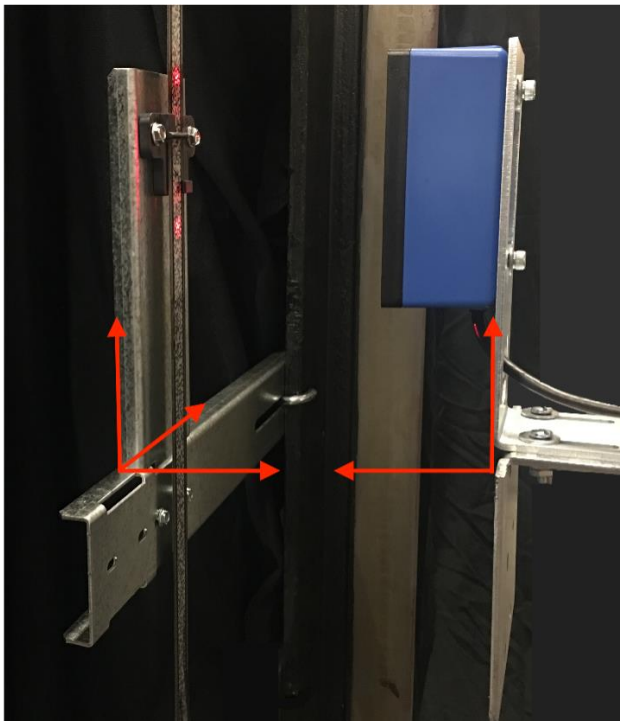

Figure E1.10: Camera Level alignment

E2 CEDES APS Positioning System Verification

E2.1 Verify CEDES APS to Pixel Communications

Using the TOC access point, verify the distance between the two cameras inside the camera sensor head. Navigate to:

Home

Install

Learn Functions

Virtual Limits

Tape Reader Offset

a. Confirm that the RAW delta difference is between 0.15 to 0.30 feet and press the Learn soft key to store value into Pixel

Learn or **Back**

Verify proper operation of the Landa system. Navigate to:

Home

Install

View Selector Data

b. Confirm that selector positions are not both zero, increment and decrement together as you run the car either up or down, and Selector 1 position is smaller than Selector 2.

NOTE: If you cannot confirm performance as described above, repeat steps in Section E1 above until the landing system operates correctly.

E2.2 Install Intermediate Tape Brackets

Install intermediate rail tape brackets with a tape holder clip at approximately every 20ft from one bracket to the next, then position the rail bracket and clip so it is centered in-between the two red LED's on the encoded tape. If the red LED's are not visible put your hand in between the camera and encoded tape for 5 seconds. See Figure E2.1



FigureE2.1: Red Setup LED's.

NOTE: Continue with job installation at Section 3.5.5 of this manual.

Quality Power Unit

POWER UNITS

DRY POWER UNITS

Dry Power Units built with the motor and belt driven pump below oil tank. Valve mounted on top, inside tank. Removable covers provide access to main and shut off valves, belt tensioner, motor and pump. With dual pumps/motors up to 200HP/850GPM power unit can be customized to meet nearly any special project.

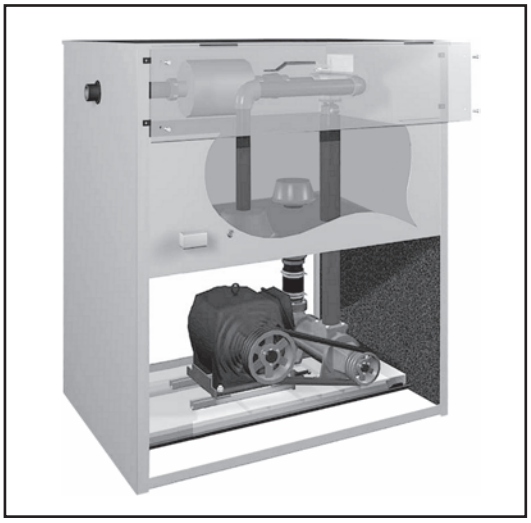

Standard Features
- Motors: 15-100HP 3 Phase
- IMO pumps: 43-425 GPM single
- Transferable oil up to 250 Gal.
- Maxton valve standard
- Valve mounted in the tank
- 12 Ga. formed tank & body
- Effective easy belt adjustment
- Noise reducing muffler
- Isolated pump/motor bedplate
- Protective packaging
- Shut off (ball) valve in the tank
- Oil level sight gauge

Optional Features
- EECO valve
- Constant down speed valves
- Custom tank sizes
- Low pressure switch
- Low oil switch
- Tank heater
- Oil cooler
- Oil level sight gauge
- Shut off(ball) valve
- Oil return pump

Typical dimensions: (48” or 60”)W x (34” or 43”)D x (60” to 77”)H

EMERGENCY POWER UNITS

Temporary hydraulic pump for elevator emergency, adjustment and maintenance.

Model CEPU

1. AC motor, 3485RPM, 120VAC, 1 phase, 60Hz, 1Hp
2. Motor power cable connector, liquid tight
3. Oil outlet to load, 3/8”-18NPT, female, (to jack)
4. Gear pump, 363 PSI, 4.23GPM
5. Oil return valve, 7.5” cable, 120VAC
6. Oil relief valve, 72-870PSI
7. Oil return, 3/8”-18NPT, male, (to oil tank)
8. Oil inlet, 3/8”-19BSPP, female, (to oil tank)
9. Oil relief valve outlet, 3/8”-18NPT, male, (to oil tank)
10. Oil inlet filter, included, 90M, 3/8”-18NPT, female

Overall dimensions: 17” x 8” x 8”, weight: 25.6 Lb.

CUSTOM OPTIONS ARE AVAILABLE

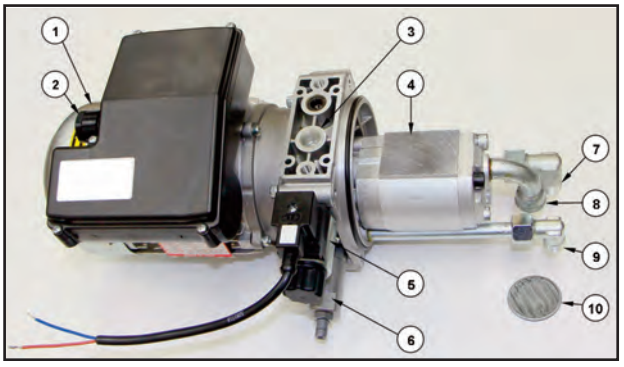

Piston Diameter	Speed FPM
2”	26.0
3”	11.6
4”	6.5
5”	4.2
6”	2.9
7”	2.1
8”	1.7
9”	1.3

QUALITY ELEVATOR PRODUCTS, INC.

(847) 581-0085 • (800) 222-3688
Fax (847) 581-0095
7760 N. Merrimac Ave. • Niles, IL 60714

Stancor_oilminder

STANCOR
Oil-Minder® Simplex & Duplex
Pump and Control Systems

Solid State, NEMA 4x
Oil-Minder® Control



SE50 Pump
with Float &
Oil-Minder®
Probe

The Stancor Oil-Minder® Control and Pump System allows water to be automatically pumped from elevator pits, transformer vaults, and industrial sumps without danger of ejecting potentially harmful oily substances into sewers, rivers and waterways. There is no need for a separate oil-water separator. The product is engineered for efficient and trouble free pumping, even under the most severe conditions. The Stancor Oil-Minder® System is the overwhelming choice among design engineers and compliance authorities worldwide, and has a proven record for protecting valuable equipment and the environment.

Features

- NEMA 4x weathertight corrosion resistant polycarbonate enclosures
- Stainless steel sensor probe with patented electronic technology that repels dirt contamination
- Single direct plug-in power source for operation of entire system
- Solid state components
- Alarms, lights, silence switch, and remote monitoring circuit for oil, high liquid, and high amperage conditions
- Complete factory assembly and testing insures quality of entire pump and control system
- Patented - Pat. #4,715,785, #4,752,188, #6,203,281 and others pending
- Oil-Minder® System can be combined with a variety of different pumps and valves
- Choice of: 115v or 220v (1 phase) OR 230v/460v/575v (3 phase)
- LED indicator lights for oil spill, power, high liquid level, overload, and pump run
- UL 508 and 778 approved
- ENTELA tested and approved as a system

"There Is Only One Oil-Minder® System and Stancor Makes It"
Quality You Can Believe In

Description of Stancor Simplex Oil-Minder® Systems

The **Stancor Simplex Oil-Minder® System** is available in two primary configurations, as follows:

The **Multi-Option Oil-Minder® System** is designed for easy, fool-proof installation. All pump and control cables are factory wired into a wall mountable junction box. Between the junction box and the main Oil-Minder® control panel is a multi-pin quick connect cable. This single cord, 8-pin system allows the electrical cable between the junction box and control panel to be run through conduit and interconnected up to 250 feet long, using a single "push and turn" motion. There is no need for field wiring. Electrical installation costs are reduced by approximately 75% and all connections are secure and water-tight.

The **Junior Oil-Minder® System** is a good choice where the main control is located in the same area as the pump pit, or where the main control will be located remotely and conventional "hard wiring" is used between a junction box and the main control. Comparative features of each model are as follows:

Feature included in standard package	O/M Multi-Option	O/M Junior
SE-40 (.4 HP) or SE-50 (.5 HP) 115V or 230V single phase pump	x	x
Solid state NEMA 4x control panel	x	x
Separate LED indicator lights on NEMA 4x control for A) oil alert, B) high water, C) high motor amps, D) power to system, and E) pump activation	x	x
Self cleaning, hermetically sealed stainless steel oil detection probe	x	x
Float switches for pump activation and high water alert	x	x
Monitoring relays for alert conditions at remote locations	x	x
High decibel, water tight horn and silence switch for alert conditions	x	x
Direct plug-in activation of entire pump and control system from the main control panel (6' cord and molded plug included)	x	x
Factory hard wiring of pump, oil probe, and floats into NEMA 4x junction box	x	
Factory hard wiring of pump, oil probe, and floats directly into main NEMA 4x control panel		x
Junction box with female 8-pin cable receptacle and disconnect	x	
25' 8-pin Quick Connect cable (expandable to 250' with interconnecting extension cables)	x	
Female 8-pin cable receptacle installed in the NEMA 4x control panel	x	

Stancor Simplex Oil-Minder® Controls

Oil-Minder® Multi-Option

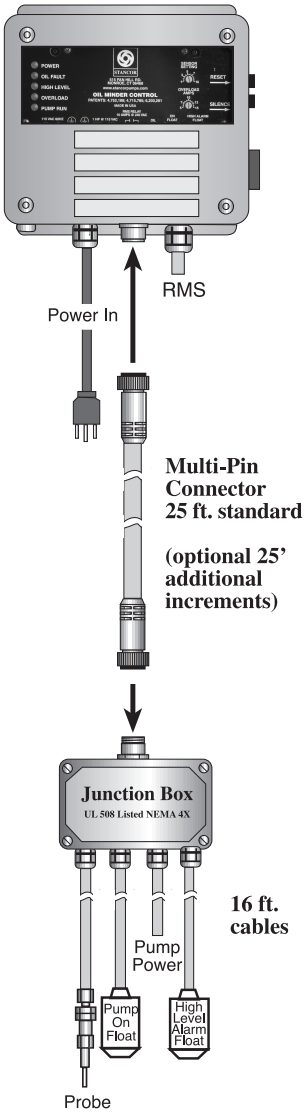

With Selected Pump

Oil-Minder® Junior

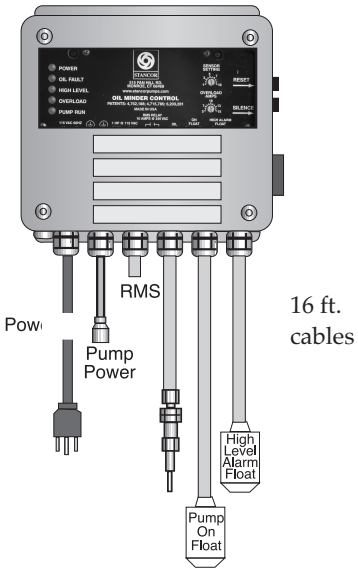

With Selected Pump

Standard Pump Selection Chart

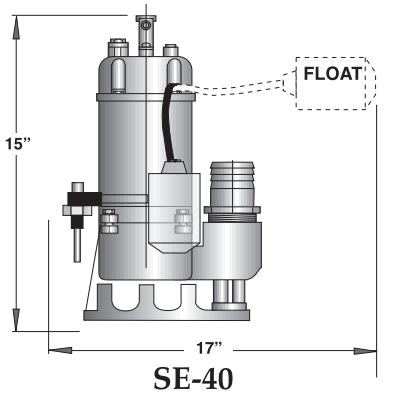

SE-40

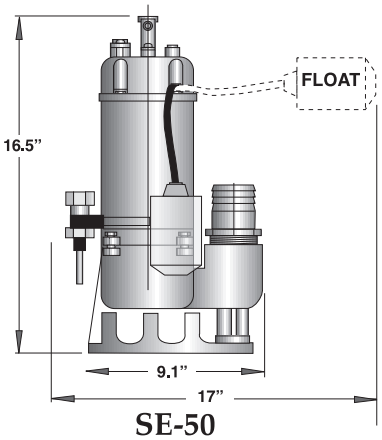

SE-50

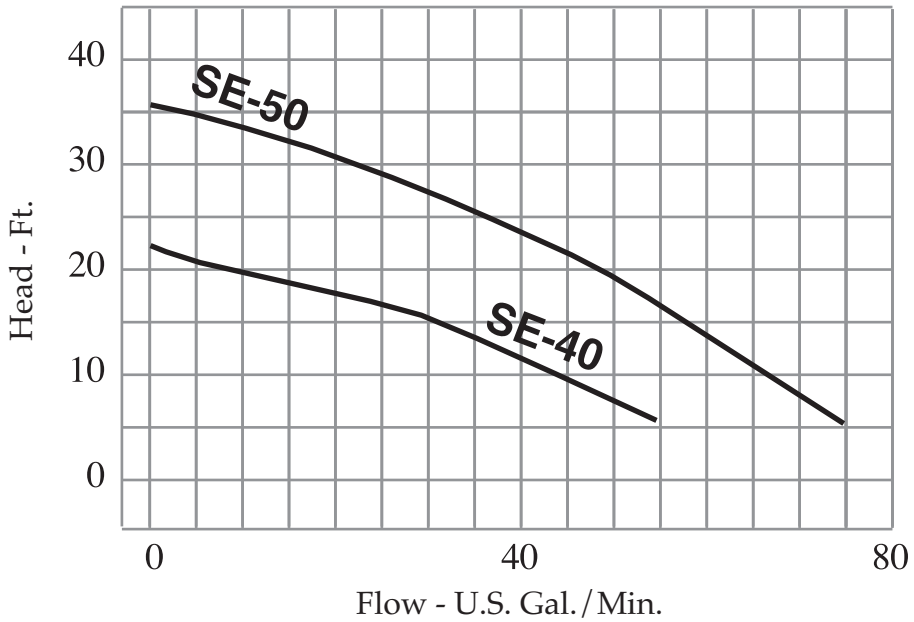

General & Electrical Specifications (Special voltages and pump models available upon request)

Model	H.P.	Voltage	RPM	Rated Full-Load Amps	Discharge Size	Max Head Ft.	Max Flow GPM
SE50	0.5	115/230 460	3600	8/4	2″	37′	74
SE40	0.4	115	3600	5	2″	22′	64

STANCOR

Typical Stancor Simplex Multi-Option Oil-Minder® System

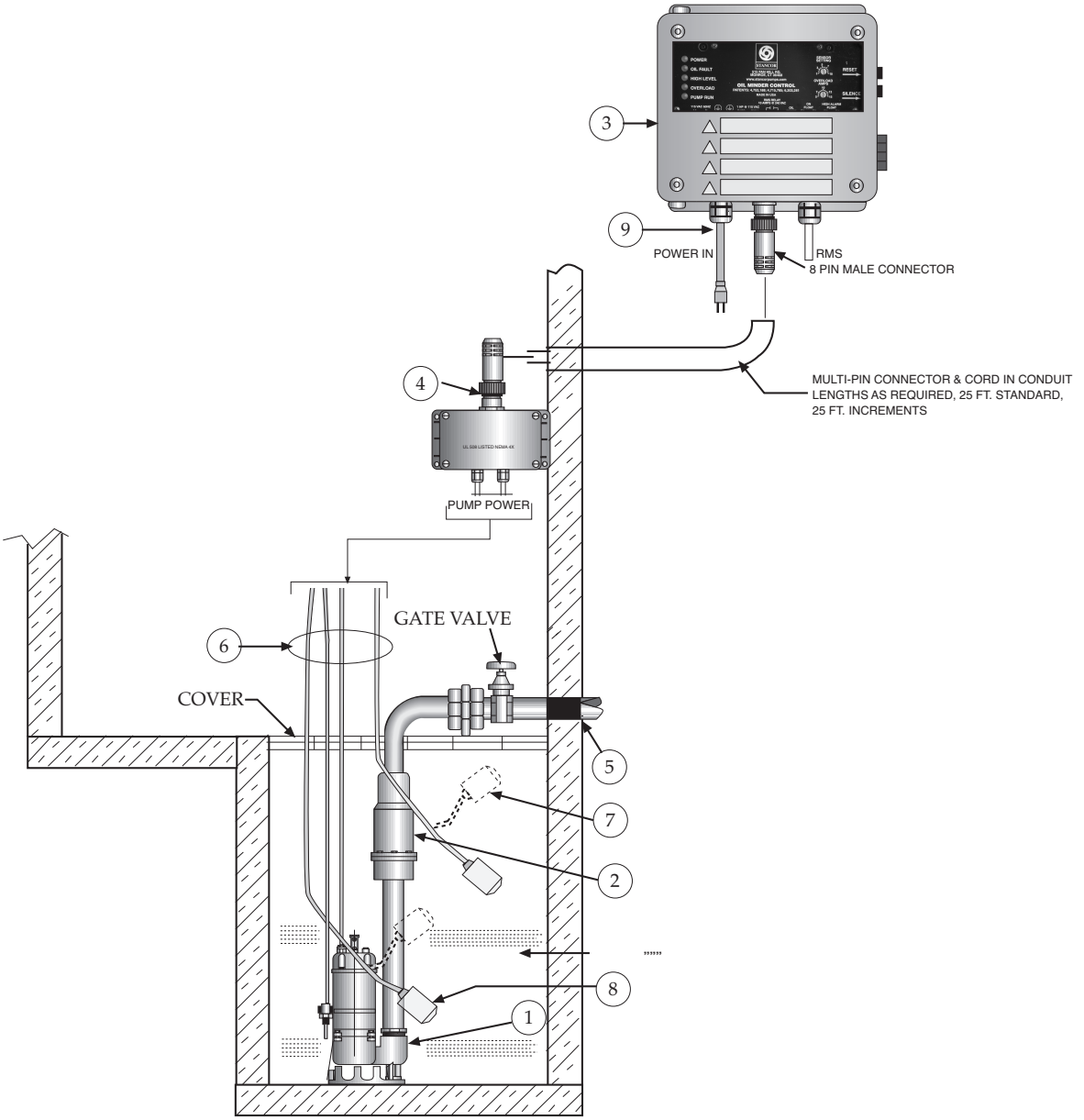

1. Stancor Model SE-50 submersible effluent pump .5 HP, 115 volt, 3600 RPM, 2" discharge connection
2. Check valve (2")
3. Stancor Oil-Minder 115V, 1Ø control system with built-in audible and visual alarm when pump does not run due to oil in pit or high liquid or high amperage condition. Provide silencing button for audible alarm built into panel. Panel shall have two contacts for a remote alarm location (one each for oil and high water or amperage alert). Junction box will be provided with multi-pin connector and cord in lengths as required, 25 ft. standard, optional 25 ft. increments.
4. Junction box will be provided with multi-pin connector and cord in lengths as required; 25 ft. is standard, optional 25 ft. increments available up to 250 ft.
5. All buried pump pressure discharge piping shall be protected with tapecoat CT corrosion protection tape
6. Pump cable, probe cable, high liquid alarm cable, and pump "on" float cable (16 ft. lengths)
7. High liquid alarm float with clamp device to mount to pump discharge piping
8. Pump On float
9. Power cord and molded ground plug (6 ft. length)

ITEMS 1, 2, 3, 4, 6, 7, 8 AND 9 PROVIDED BY STANCOR AS A STANDARD PACKAGE

STANCOR	TECHNICAL DATA	AVENGER SERIES	SE-100
	Dwg: DS-A09-009	Rev: 2	Date: 01/16

MOTOR SPECIFICATIONS



Motor Design	Induction
Motor Type	Enclosed submersible
Insulation Class	Class E
Motor Protection	Bi-metallic Thermal Switch
Bi-Metallic Temp Trip	120° C ± 5° C
Service Factor	1.3
Voltage Tolerance	± 10% from nominal

MOTOR DATA, 60Hz

Model	Phase	Output Power BHP	Volts	Full Load Amps	Locked Rotor Amps	NEMA Code Letter	Power Factor 100% Load	Motor Efficiency 100% Load	Pole/ Speed (rpm)
SE-100	1	1.0	115	12.0	60.00	H	0.99	0.71	2/3450
	1	1.0	230	6.0	30.00	H	0.99	0.60	2/3450
	3	1.0	230	3.0	15.00	G	0.87	0.74	2/3450
	3	1.0	460	1.5	9.00	J	0.83	0.75	2/3450
	3	1.0	575	1.2	6.00	G	0.80	0.76	2/3450

MATERIALS OF CONSTRUCTION

Upper Motor Lid	Nylon 66
Motor Housing	AISI 304 Stainless Steel
Oil Chamber	FC-20 Cast Iron
Volute	FC-20 Cast Iron
External Hardware	AISI 304 Stainless Steel
O-Rings	Nitrile (Buna N)
Motor Shaft	Stainless Steel (410)
Upper Bearing	Single row Sealed
Lower Bearing(s)	Single row Sealed
Upper Shaft Seal	CA/CE (carbon/ceramic)
Lower Shaft Seal	SIC/SIC (silicon carbide/silicon carbide)
Impeller	FC-20 Cast Iron

DIMENSIONS, WEIGHT, AND MISC.

Pump weight single phase	40lbs (18kg)
Pump weight three phase	40lbs (18kg)
Maximum submergence	30 feet (9m)
Discharge size, standard	2 inch NPT female vertical
Maximum temp. of pumped fluid	104°F (40°C)

CABLE SPECIFICATIONS

MODEL	PHASE/VOLTAGE	POWER CABLE	LENGTH	OUTER JACKET
SE-100	1Ø-115V	SJTOW 14/3	33 feet (10m)	NBR
	1Ø-230V	SJTOW 16/3	33 feet (10m)	NBR
	3Ø-230V	STOW 16/4	33 feet (10m)	NBR
	3Ø-460V	STOW 16/4	33 feet (10m)	NBR
	3Ø-575V	STOW 16/4	33 feet (10m)	NBR

Power cable suitable for all standard voltages listed in “MOTOR DATA” section.

Specifications subject to change without notice

Stancor, Inc. 515 Fan Hill Road, Monroe, CT 06468 Tel: 203-268-7513 Fax : 203-268-7958 www.stancorpumps.com

SE-100

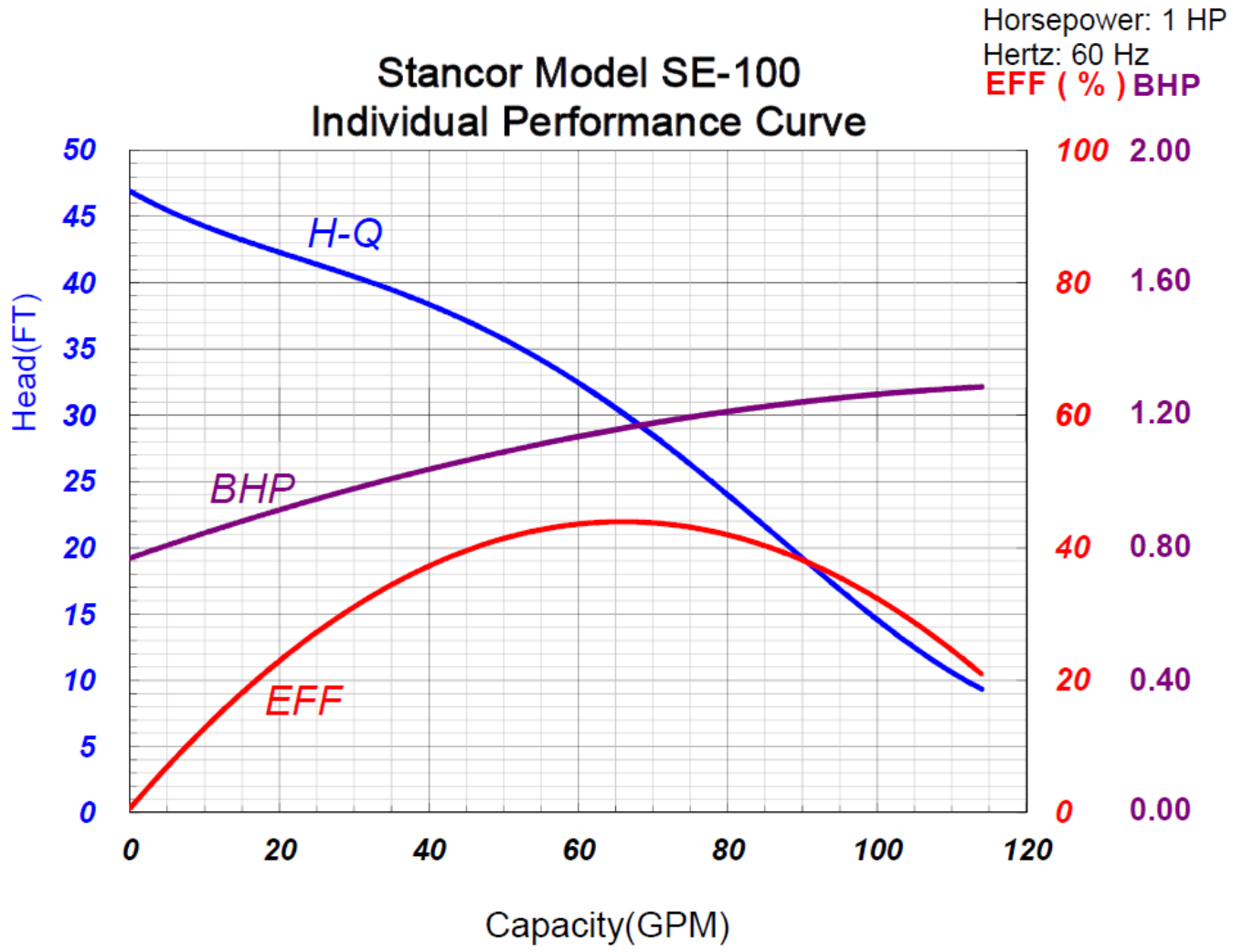
Horsepower: 1 HP
Hertz: 60 Hz
EFF (%) BHP
Stancor Model SE-100
Individual Performance Curve
H-Q
BHP
EFF
Head(FT)
50
45
40
35
30
25
20
15
10
5
0
100 2.00
80 1.60
60 1.20
40 0.80
20 0.40
0 0.00
0
20
40
60
80
100
120
Capacity(GPM)

WiringSchematic-iLEARN-CURION

Courion iSYSTEM Wiring Schematic Notes

Read and Understand These Items Before Wiring Your Courion System

1. Courion's iSYSTEM requires only one (1) iLEARN Door Control per hoistway, including single-sided, pass-through, and staggered hoistways.

2. **POWER REQUIREMENTS** - Courion's iLEARN Door Control requires 110 VAC. Courion's Hoistway and Car Top Equipment requires a 240 VAC 3-Phase Power Supply. When the power supply exceeds 260 VAC, step-down transformers will be supplied by Courion. If the power supply is below 208 VAC, booster transformers may be supplied by Courion. See Courion's iLEARN System Manual for additional details.

3. **POWER SUPPLY DISCONNECT** - A means to disconnect the 240 VAC 3-Phase and the 110 VAC Single Phase is generally required as part of the electrical code. A disconnect switch with 10 AMP fuses should be provided by the General Contractor for the 240VAC 3-Phase service.

4. **HOISTWAY WIRING MATERIAL** - Courion's iSYSTEM includes the following wiring bundles (provided by Courion) as referred to in these drawings:

- iWIRE Motor Bundle (#90-947400) includes four (4) 16 AWG insulated conductors (M1, M2, M3, Spare).
- iWIRE CANbus Bundle (#90-947405) includes two sets of shielded twisted pair wires for the CANbus Network (C01, C02, C03, C04) and a Drain Wire.
- iWIRE Hoistway Bundle (#90-947409) includes five (5) 16 AWG insulated conductors (L1, L2/N, L3, G and SP01), one (1) 18 AWG insulated conductor (C05/C06) for the Address In/Out on Courion's CANbus Network, and three (3) spare 18 AWG insulated conductors (SP02, SP03, SP04).
- iWIRE Floor/Gate Bundle (#90-947415) includes fifteen (15) 18 AWG insulated conductors for the Interlock Zone Contact, EUD, Push Buttons, Gate Contact, and Safety Access Switch (01, 02, 03, 04, 05, 06, 07, DI, DI, DI, GC01, GC02, GC03, SC01, SC02)
- iWIRE Traveling Cable (#90-947416) includes five (5) 16 AWG insulated conductors (L1, L2/N, L3, G, SP01), one (1) Beldin Device Net Cable, and three (3) 18 AWG insulated conductors as spares (SP02, SP03, SP04).
- iWIRE Interconnection Cable (#90-947423) includes three (3) 16 AWG insulated conductors, and twenty (20) 18 AWG insulated conductors for the interconnection of the iLEARN Door Control and the Elevator Control.

5. **iWIRE CANBUS NETWORK** - The iWIRE CANbus Cable (2 twisted pair and drain wire) is DAISY CHAINED from the iLEARN Door Control to each iDRIVE VFD Floor Control and then to the Car Top iDRIVE VFD Gate Control(s). **IMPORTANT**: To insure proper communication over the iSYSTEM CANbus Network:

a. Each iDRIVE must be wired **IN SERIES - NO BRANCHES** are allowed on the CANbus Network.
b. GROUND all shielding and drain wires in the Machine Room. Drain wires must be continuous up the hoistway to the Car Top.
c. SEPARATE all power lines (L1, L2, L3) and motor wires (M1, M2, M3) from your CANbus Cable. **DO NOT INCLUDE IN THE SAME CONDUIT**.

6. **IWIRE CANbus ADDRESS WIRE** - iDRIVE Floor Controls are addressed in the order they are wired from the iLEARN Door Control in the machine room (e.g. iDRIVE 1, iDRIVE 2, iDRIVE 3). CANbus Port C05 (Address In) and C06 (Address Out) are run in series as shown from one iDRIVE Floor Control to the next. There is no C05/C06 Address Wire required for the Car Top VFD Controls.

7. **INTERLOCK DOOR CLOSED CONTACT (Normally Closed) and INTERLOCK DOOR LOCKED CONTACT (Normally Closed)** See Elevator Control Wiring Diagrams for wiring information. Q Style Interlock Shown on these prints. Courion P Style Interlocks do not have a Door Closed Contact.

8. **INTERLOCK ZONE CONTACT (Normally Open)** Closes when the Elevator is at the floor and the Retiring Cam drops to actuate the Interlock. **If you have Front Openings, the Interlock Contacts are wired between DI and 03. If you have Rear Openings, the Interlock Zone Contacts are wired between DI and 01.**

9. **EMERGENCY UNLOCKING DEVICE (EUD) (Normally Closed)** Opens when the EUD switch is activated. **If you do NOT have an EUD at a particular floor, this input must be closed with a permanent jumper.**

10. HALL AND COP PUSH BUTTONS (Not By Courion)

Stop - (Normally Closed) **If you do not have a STOP Button, this input must be closed with a permanent Jumper.**
Close - (Normally Open)
Open - (Normally Open)
Reset - (Normally Open)

11. **FRONT AND REAR CAR GATES** - If you have a FRONT and REAR Car Gate, the iWIRE CANbus Cable MUST terminate in the FRONT Gate iDRIVE VFD Control. All iDRIVE.G Car Top Controls are set up for a FRONT Car Gate. **If you have a REAR Car Gate - 1. Remove the resistor from terminals C03 and C04 inside the iDRIVE.G VFD Control, and 2. Place a jumper between terminals J4-1 and J4-2 entitled "Rear Gate" on the iDRIVE.G Expansion Module.**

12. REVERSING EDGE (Normally Closed Circuit) - Opens when Reversing Edge is obstructed by an object. If there is no obstruction and Reversing Edge Contact is not made, adjust the contact on the Gate Panel for proper actuation.

13. DOOR MOTOR WIRING - Door Motors are to be wired to run in opposite directions. Invert one pair of Motor Wires between the Motors. For example, connect the Interlock side motor M1-Red, M2-WHT, and M3-BLU. Connect the non-Interlock side motor M1-BLU, M2-WHT, and M3-Red. Wire each Opening the same. When Starting-Up, if the Door Panels move in the opposite direction expected, reverse the M1 and M2 Wires inside the iDRIVE VFD Door Control.

14. DEFAULT DOOR OPERATION - iLEARN Door Control default operation is Constant Pressure Close. See iLEARN Control Manual for procedure to change default door operation.

15. START-UP - DO NOT complete the Elevator Control Interconnections until after completing the Initial Start-Up Steps described in the Courion iLEARN Control Manual. Detailed Interconnection information can be found in the iLEARN Control Manual and in your Elevator Control Wiring Schematics. **Before Start-Up, INS-Inspection, HPB-Hall Push Button, and FSH-Fire Service Hold input circuits must be closed with a temporary jumper in order to operate the Courion Hoistway Doors and Car Gate.**

16. WIRING SCHEMATICS - Hoistway Wiring Schematic (2 pages), Floor Wiring Schematic Detail, Car Top Wiring Schematic Detail, iLEARN Door Control Detail, Transformer Wiring Detail.

Courion
3044 Lambdin Avenue
St. Louis, MO 63115
(314) 533-5700 or (800) 533-5760

TITLE	REV	SCALE	SHT
Hoistway Wiring Schematic iLEARN Door Control	B	N/A	1 of
	DATE	09/21/16	

Courion iSYSTEM Wiring Schematic Notes

Read and Understand These Items Before Wiring Your Courion System

SYSTEM PART IDENTIFICATION

iLEARN Door Control	iDRIVE VFD Floor Control	iDRIVE VFD Gate Control	iDRIVE Gate Expansion Module	Door iSENSOR	Gate iSENSOR
				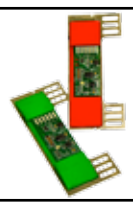	

iWIRE Motor Bundle	iWIRE CANbus Cable	iWIRE Floor/Gate Bundle	iWIRE Traveling Cable	iWIRE Hoistway Cable	iWIRE Intercon-nection Bundle
			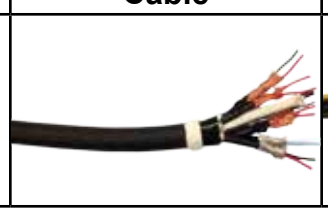	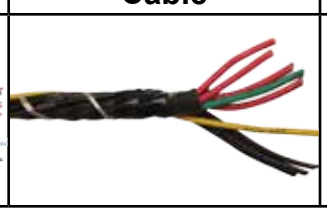	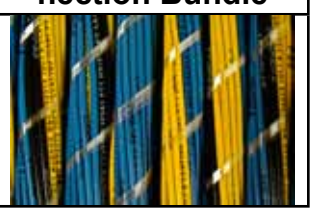

The CANbus Cable must be DAISY CHAINED from the iLEARN Door Control to each iDRIVE Unit. **NO BRANCHES ALLOWED** in the iSYSTEM CAN-bus Network.

CANbus Network

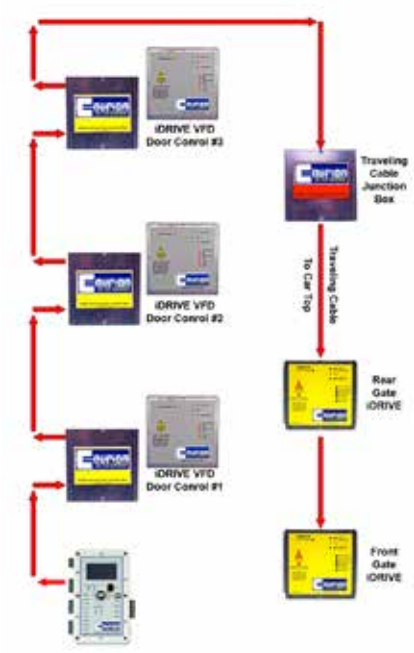

Ground the CANbus Drain Wire ONLY in the iLEARN Control Box and keep continuous throughout the iSYSTEM Network.

Wire the CANbus Address Wire C05/C06 in SERIES from the iLEARN Door Control to each iDRIVE VFD Door Control.

CANbus Address Wire

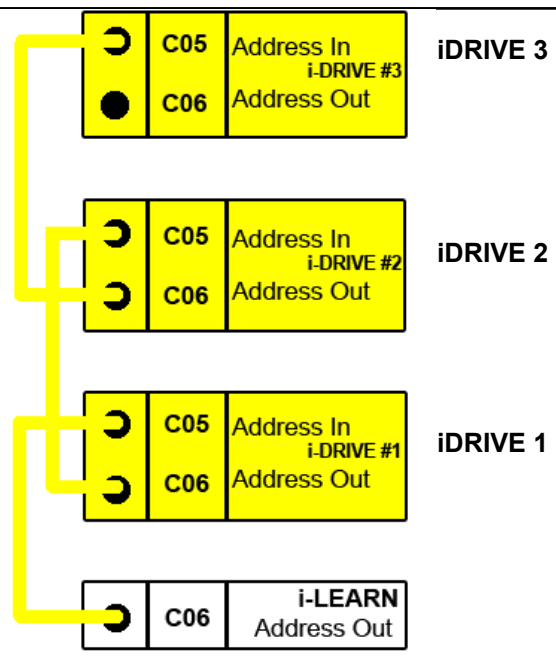

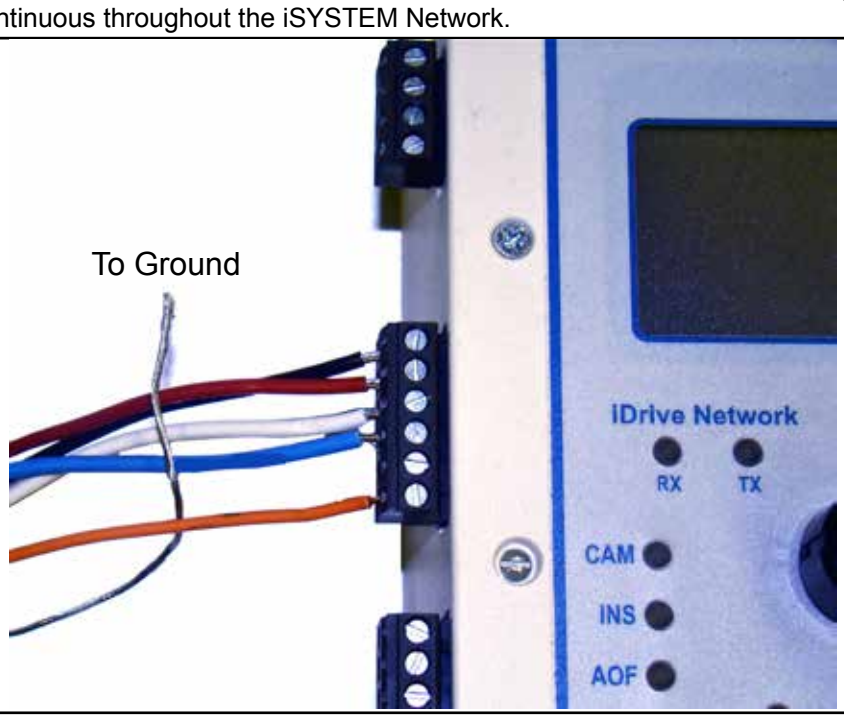

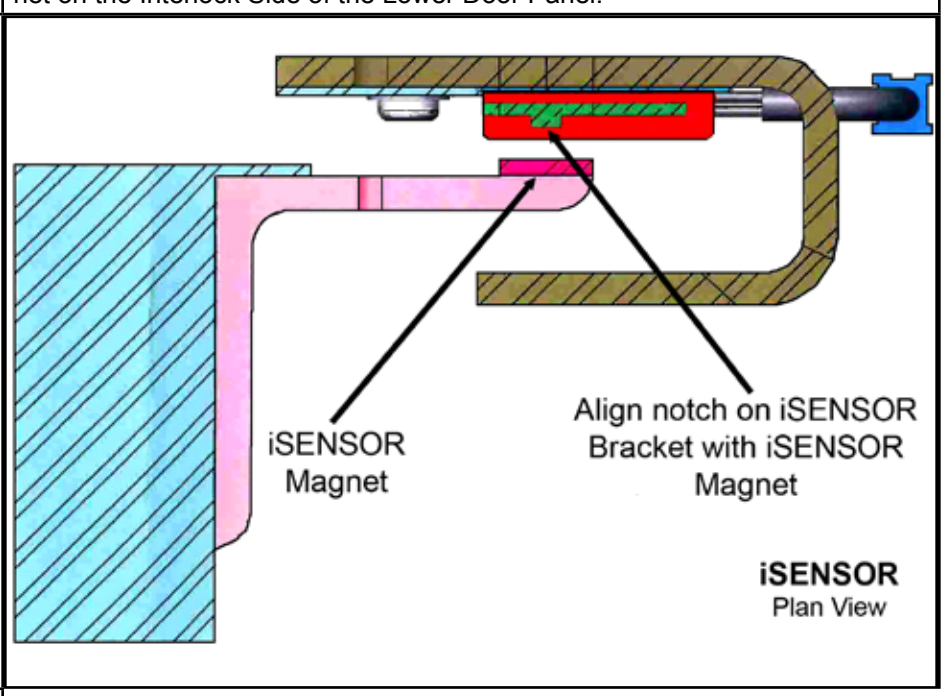

REAR GATE - Remove the resistor from terminals C03 and C04 inside the iDRIVE.G VFD Gate Control and place a JUMPER between terminals J4-1 and J4-2 “Rear Gate” on the iDRIVE.G Expansion Module.

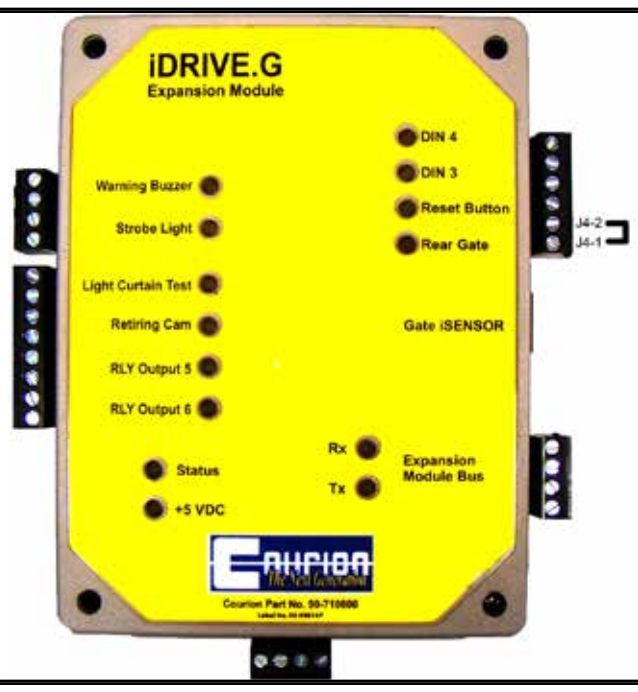

Courion
3044 Lambdin Avenue
St. Louis, MO 63115
(314) 533-5700 or (800) 533-5760

TITLE	REV	SCALE	SHT
Hoistway Wiring Schematic iLEARN Door Control	**B**	N/A	1 of
	DATE	09/21/16	

See Notes 4 - Wiring Material Provided By Courion

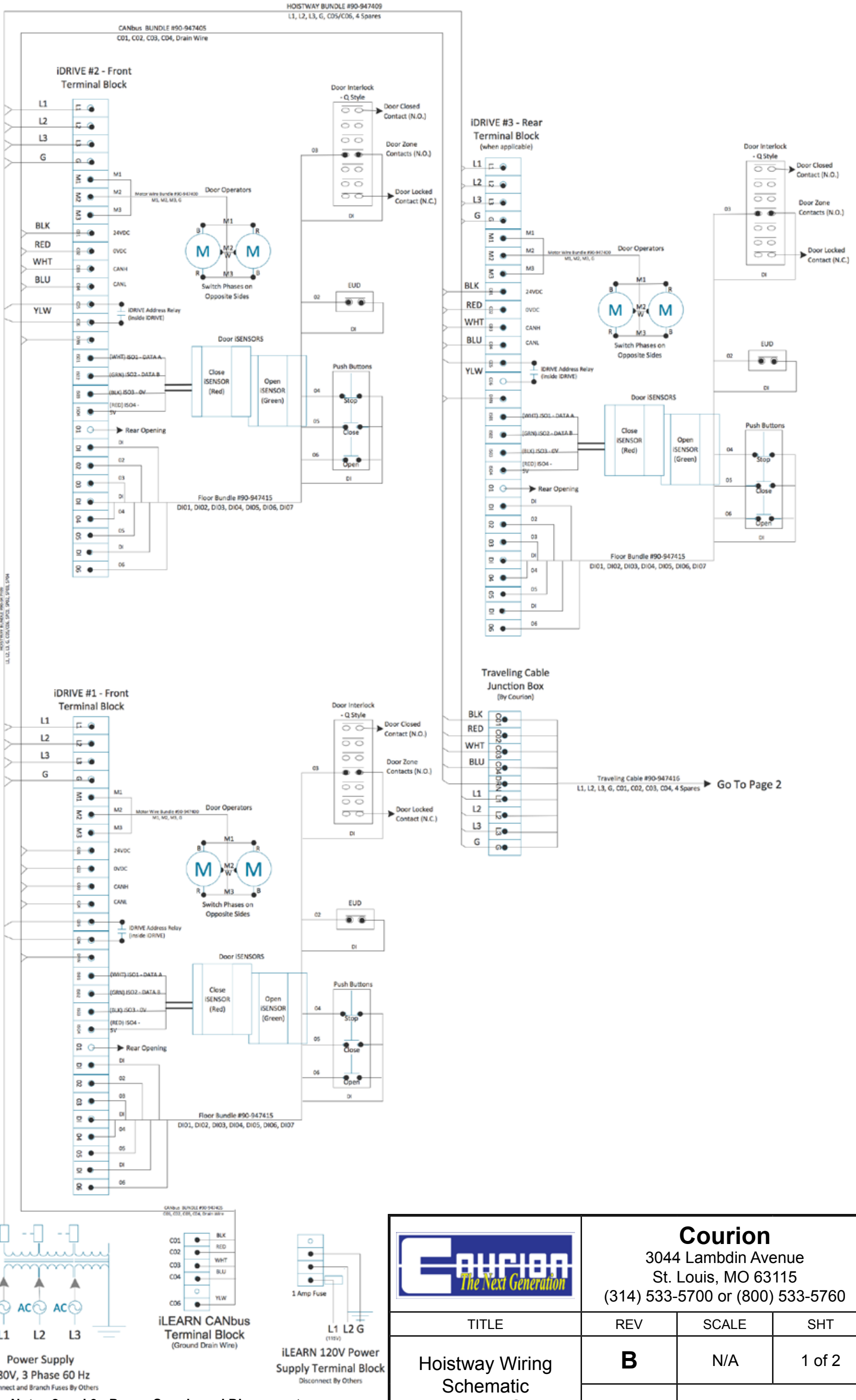

See Notes 2 and 3 - Power Supply and Disconnects

See Notes 5 and 6 regarding CANbus Wiring Requirments

Courion 3044 Lambdin Avenue St. Louis, MO 63115 (314) 533-5700 or (800) 533-5760			
TITLE	REV	SCALE	SHT
Hoistway Wiring Schematic iLEARN Door Control	**B**	N/A	1 of 2
	DATE	04/14/16	

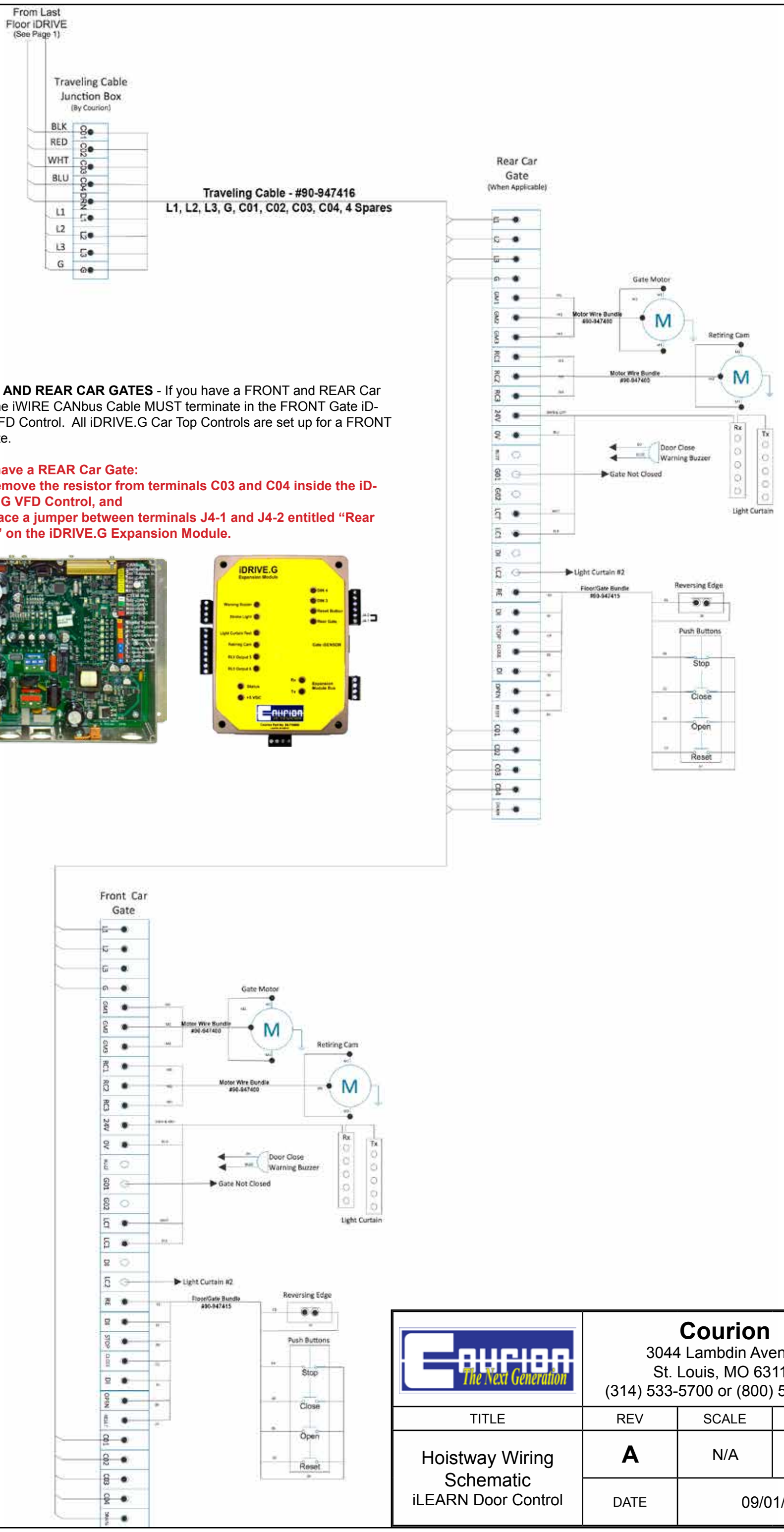

FRONT AND REAR CAR GATES - If you have a FRONT and REAR Car Gate, the iWIRE CANbus Cable MUST terminate in the FRONT Gate iDRIVE VFD Control. All iDRIVE.G Car Top Controls are set up for a FRONT Car Gate.

If you have a REAR Car Gate:

1. **Remove the resistor from terminals C03 and C04 inside the iDRIVE.G VFD Control, and**
2. **Place a jumper between terminals J4-1 and J4-2 entitled "Rear Gate" on the iDRIVE.G Expansion Module.**

Courion 3044 Lambdin Avenue St. Louis, MO 63115 (314) 533-5700 or (800) 533-5760			
TITLE	REV	SCALE	SHT
Hoistway Wiring Schematic iLEARN Door Control	**A**	N/A	2 of 2
	DATE	09/01/14	

TYPICAL HOISTWAY FLOOR DETAIL

Interlock Door Closed Contact - Normally Closed

See Elevator Control Wiring Diagrams for wiring information

LO = Doors are NOT Closed.

HI = Doors are Closed.

Courion Q Style Interlock Shown. Courion P Style Interlock does not have a Door Closed Contact.

Interlock Door Locked Contact - Normally Closed

See Elevator Control Wiring Diagrams for wiring information

LO = Interlock has been actuated by the Retiring Cam.

HI = Doors are Closed and Locked, and Interlock has not been actuated by the Retiring Cam.

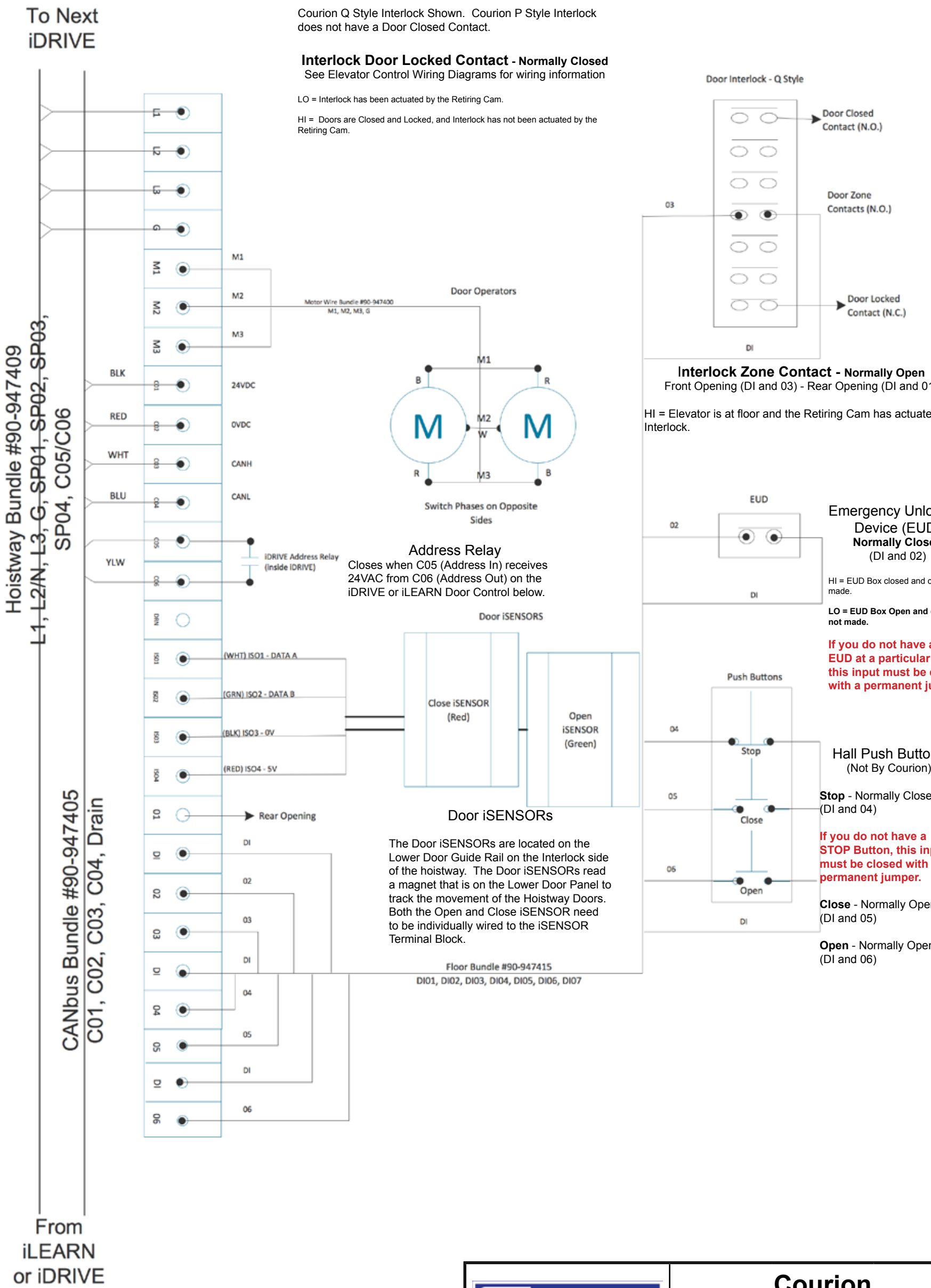

Address Relay

Closes when C05 (Address In) receives 24VAC from C06 (Address Out) on the iDRIVE or iLEARN Door Control below.

Door iSENSORs

The Door iSENSORs are located on the Lower Door Guide Rail on the Interlock side of the hoistway. The Door iSENSORs read a magnet that is on the Lower Door Panel to track the movement of the Hoistway Doors. Both the Open and Close iSENSOR need to be individually wired to the iSENSOR Terminal Block.

Interlock Zone Contact - Normally Open

Front Opening (DI and 03) - Rear Opening (DI and 01)

HI = Elevator is at floor and the Retiring Cam has actuated the Interlock.

Emergency Unlocking Device (EUD)

Normally Closed
(DI and 02)

HI = EUD Box closed and contact made.

LO = EUD Box Open and contact not made.

If you do not have an EUD at a particular floor, this input must be closed with a permanent jumper.

Hall Push Buttons

(Not By Courion)

Stop - Normally Closed - (DI and 04)

If you do not have a STOP Button, this input must be closed with a permanent jumper.

Close - Normally Open - (DI and 05)

Open - Normally Open - (DI and 06)

Courion 3044 Lambdin Avenue St. Louis, MO 63115 (314) 533-5700 or (800) 533-5760			
TITLE	REV	SCALE	SHT
Floor Wiring Schematic iLEARN Door Control	**B**	N/A	1 of 1
	DATE	04/14/16	

TYPICAL CAR TOP DETAIL

FRONT AND REAR CAR GATES - If you have a FRONT and REAR Car Gate, the iWIRE CANbus Cable MUST terminate in the FRONT Gate iDRIVE VFD Control.

All iDRIVE.G Car Top Controls are set up for a FRONT Car Gate. If you have a REAR Car Gate -

1. Remove the resistor from terminals C03 and C04 inside the iDRIVE.G VFD Control, and

2. Place a jumper between terminals J4-1 and J4-2 entitled “Rear Gate” on the iDRIVE.G Expansion Module.

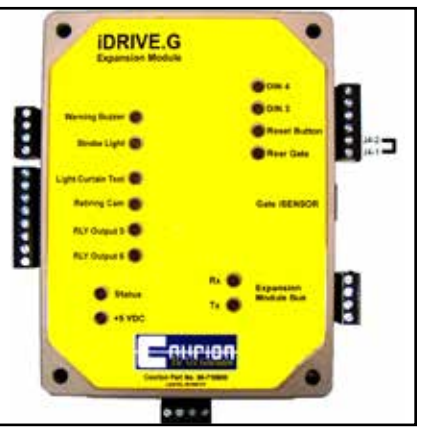

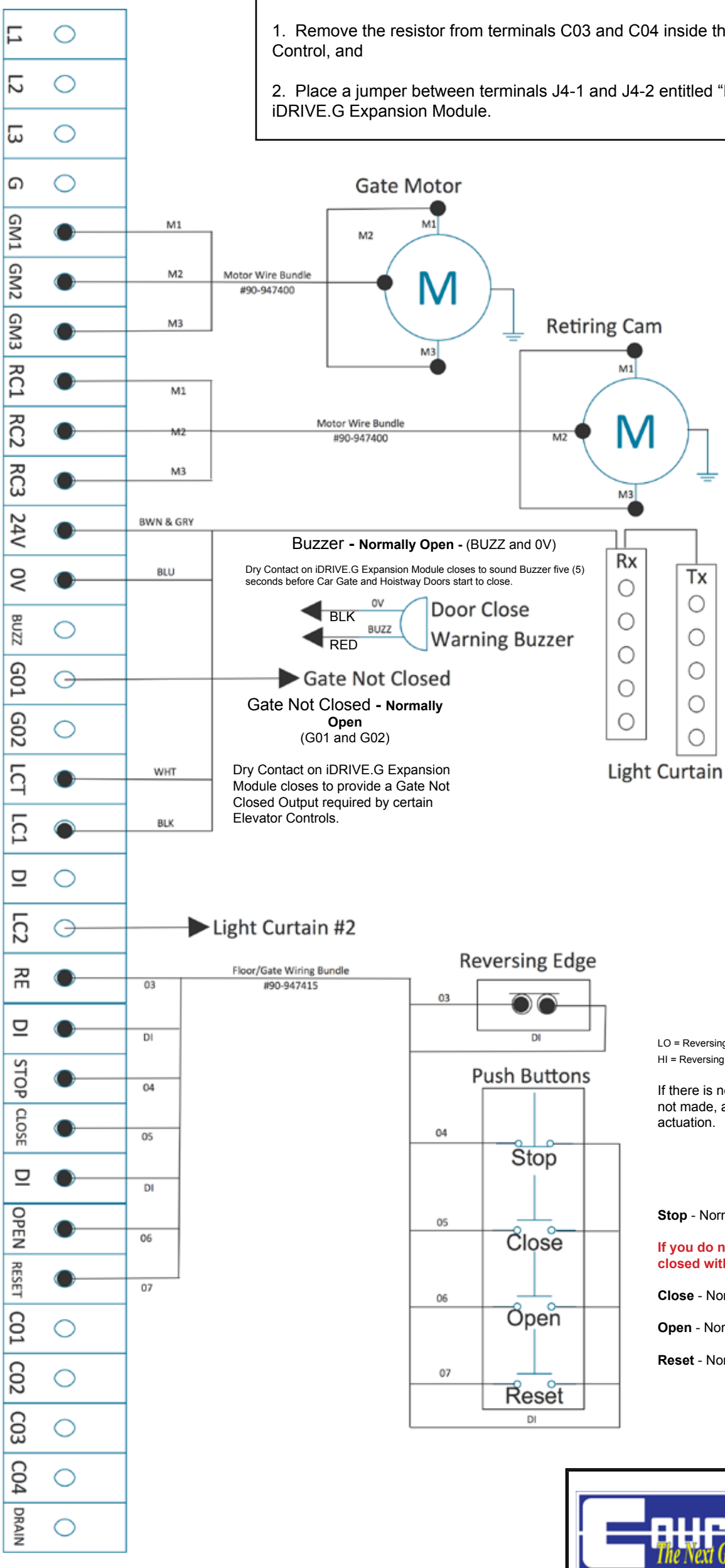

Light Curtain
Normally Closed
(24V, LCTEST, LC1, 0V)

LO = Light Curtain Obstructed.
HI = Light Curtain Clear

The CARE Light Curtain connects directly to the Car Top Control Terminal Strip. There is no intermediate control or power supply.

Second Light Curtain

If you have a second light curtain on the same Car Gate, then remove the jumper between LC2 and DI and wire Output 1 on the second light curtain (BLK) to the LC2 terminal - all other wiring is the same.

Reversing Edge
Normally Closed
(RE and DI)

LO = Reversing Edge Obstructed.
HI = Reversing Edge Clear

If there is no obstruction and Reversing Edge Contact is not made, adjust the contact on the Gate Panel for proper actuation.

Car Push Buttons
(Not By Courion)

Stop - Normally Closed - (DI and 04)

If you do not have a STOP Button, this input must be closed with a permanent jumper.

Close - Normally Open - (DI and 05)

Open - Normally Open - (DI and 06)

Reset - Normally Open - (DI and 07)

Gate iSENSOR Encoder
(By Courion)

Plug the Gate iSENSOR into the side of the iDRIVE.G Expansion Module inside the iDRIVE.G Control Box. Ground the iSENSOR.G Assembly to the Car Top.

Courion
3044 Lambdin Avenue
St. Louis, MO 63115
(314) 533-5700 or (800) 533-5760

TITLE	REV	SCALE	SHT
Car Top Wiring Schematic iLEARN Door Control	A	N/A	1 of 1
	DATE	09/01/14	

Standard Transformers

Wiring Diagram for connecting two (2) Single Phase Dual Voltage Transformers as one (1) Three Phase Open Delta Transformer 460/230 - 3 Phase - 60 Hz with 115VAC tap if required.

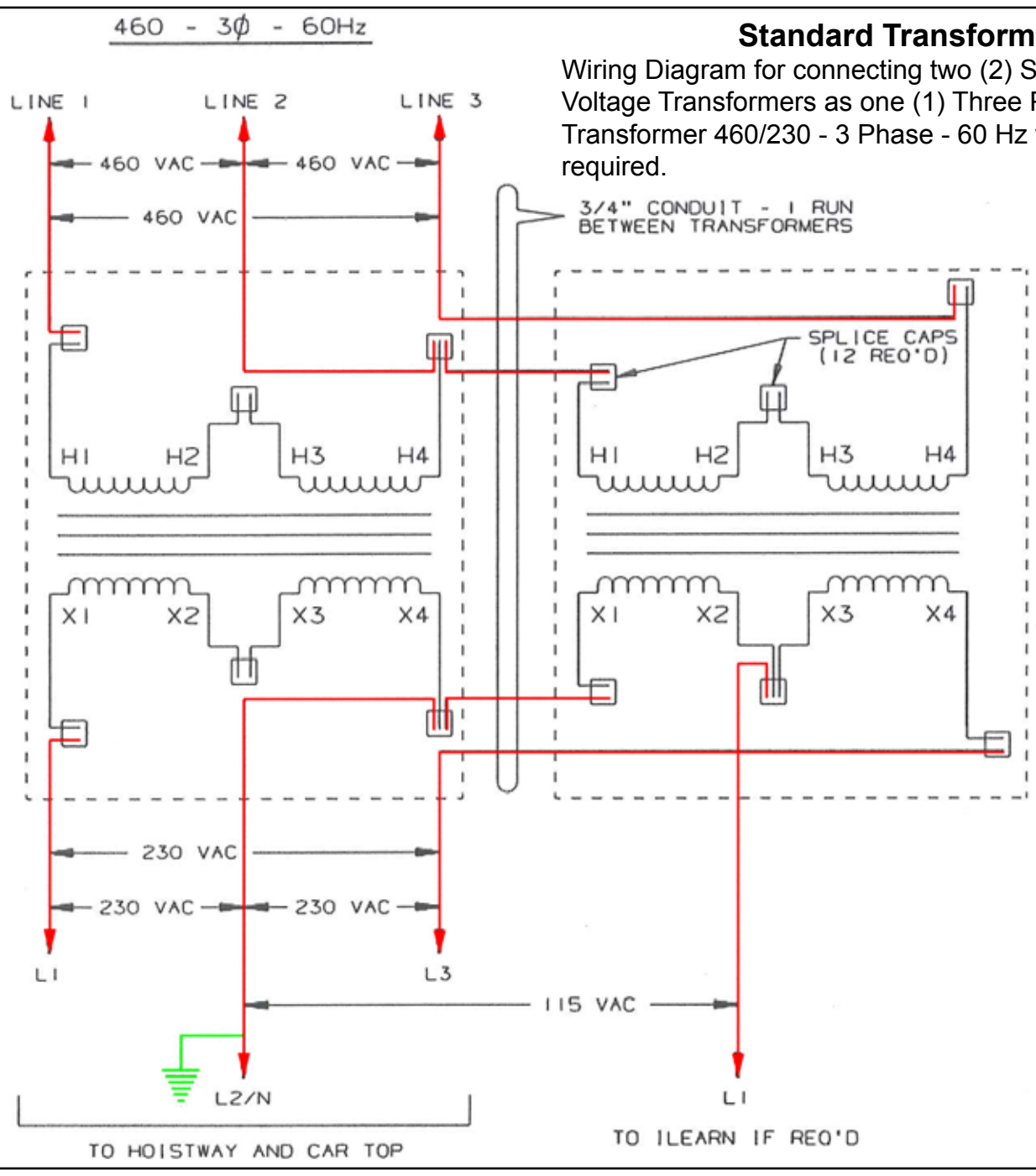

Booster Transformers

Wiring Diagram for connecting two (2) Single Phase Dual Voltage Boost Transformers as one (1) Three Phase Open Delta Transformer 208/230 - 3 Phase - 60 Hz.

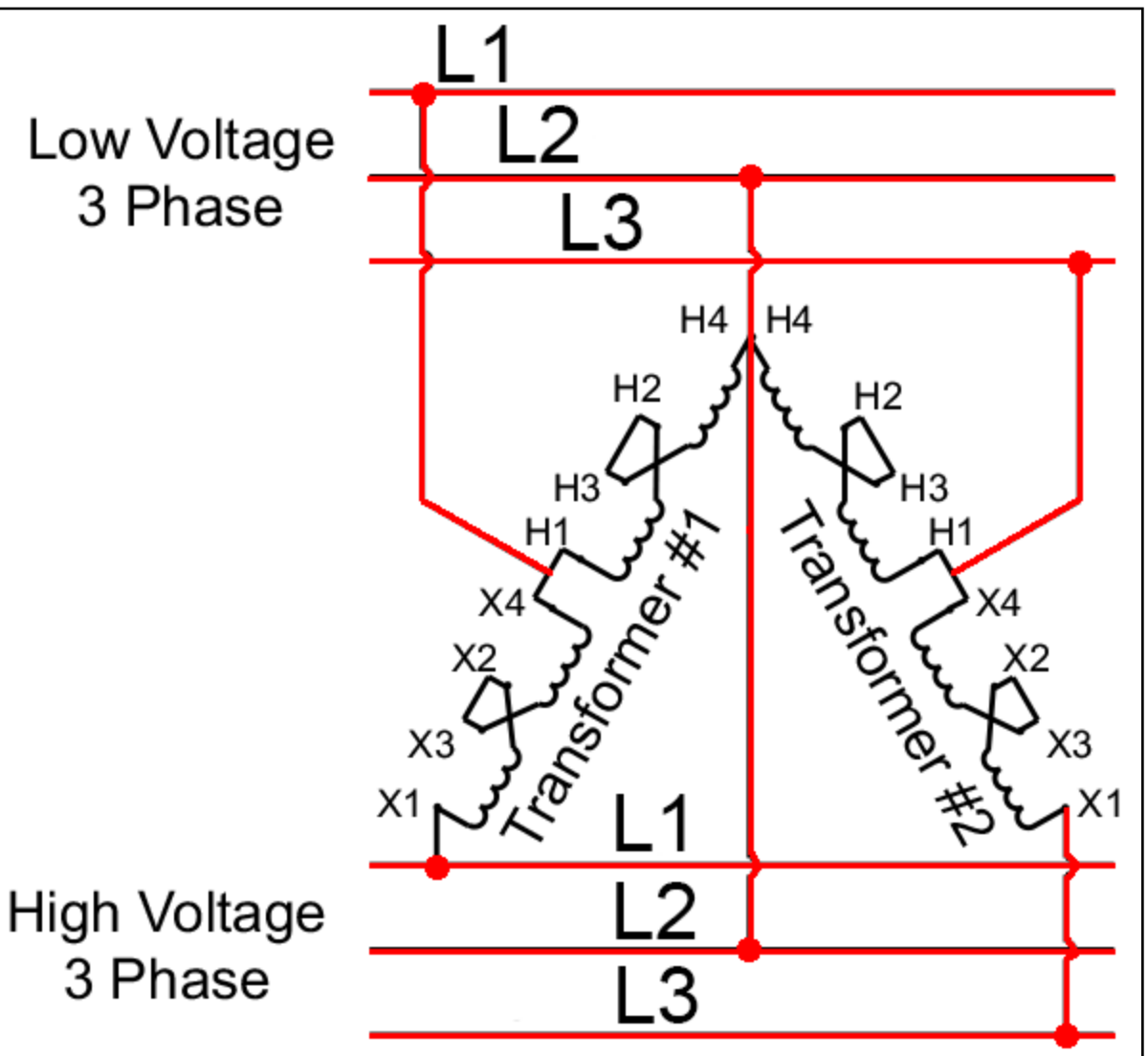

Recommended Wire Size:

Transformer - 14 GA
All Motors - 16 GA
Control Circuits - 18 GA

Note:

If 16 GA wires are not available, use two (2) 18 GA wires.

COURION The Next Generation	**Courion** 3044 Lambdin Avenue St. Louis, MO 63115 (314) 533-5700 or (800) 533-5760		
TITLE	REV	SCALE	SHT
Transformer Wiring Schematic iLEARN Door Control	**A**	N/A	1 of 1
	DATE	09/01/14	

ZZIPCO Oil Cooler

ZZIPCO

AIR OIL COOLER

PART NO. NETHY#06M2TF00

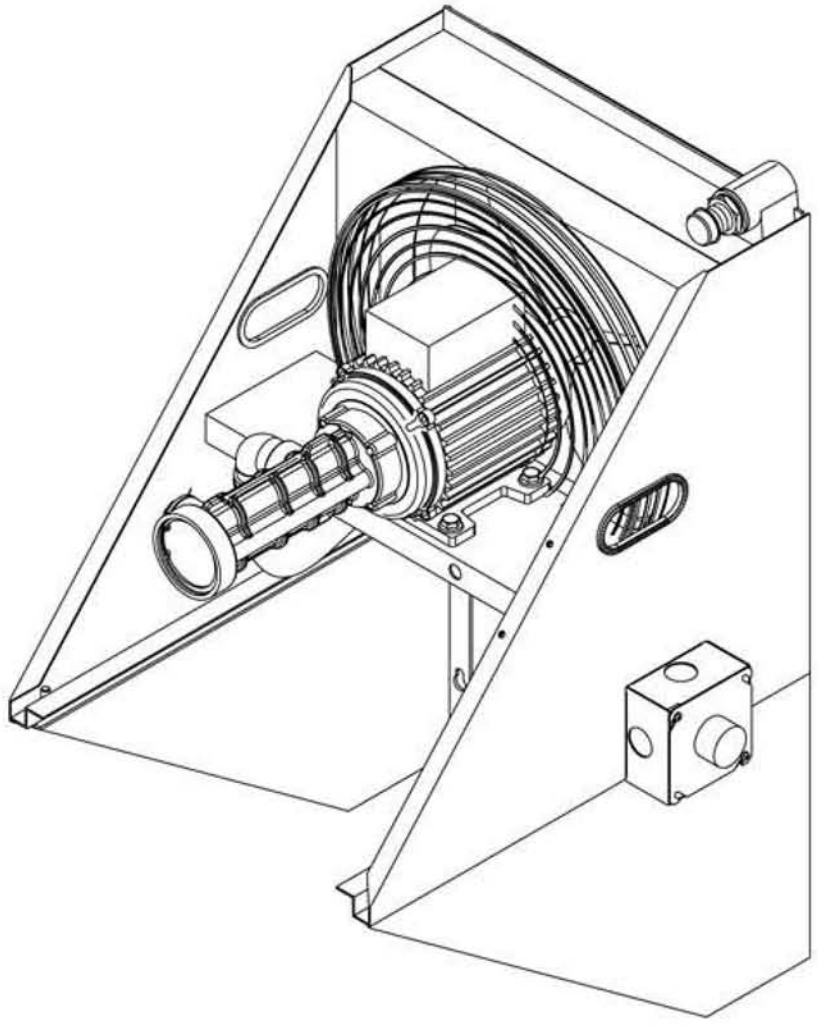

INSTRUCTION MANUAL

ZZIPCO
3 TICE ROAD FRANKLIN LAKES, NJ 07417-1326
PHONE: 201 485-7300 - FAX: 201 786-9111
SALES@ZZIPCOUS.COM

PART#:NETHY#06M2TF00

Index

1 - System description	**2 - Electrical connection**	**3 - Technical specification**
1.1 - Overall dimensions NETHY#06M2TF00		3.1 - Thermal exchange diagram
		3.2 - Plumbing diagram
		3.3 - Operating features
4 - Typical installation	**5 - General information**	**6 - Operating information**
	5.1 - Introduction	6.1 - Operating standard
	5.2 - Symbols description	6.2 - Use
	5.3 - System description	6.3 - Machine shutdown
		6.4 - Machine handling
		6.5 - Recommendations
		6.6 - Trouble Shooting
7 - Spare parts	**8 - Installation /NETHY station fitting**	

1 - System description

1.1 - Overall dimensions (inches) NETHY#06M2TF00

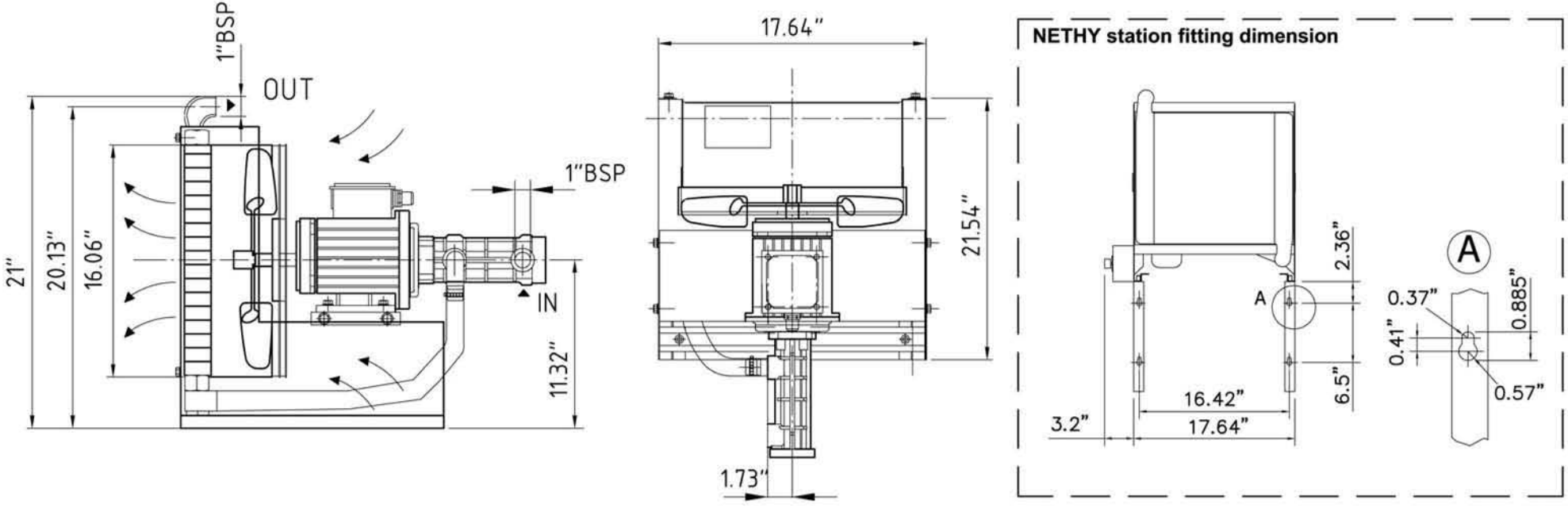

2 - Electrical connection for motor NETHY#06M2TF00 (115-230 V 60 Hz Single phase)

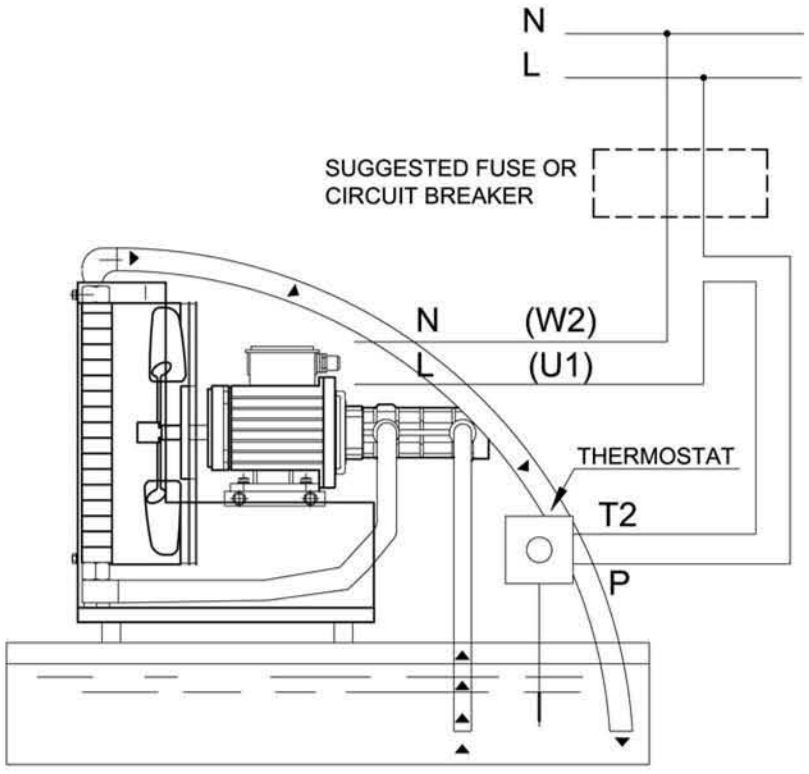

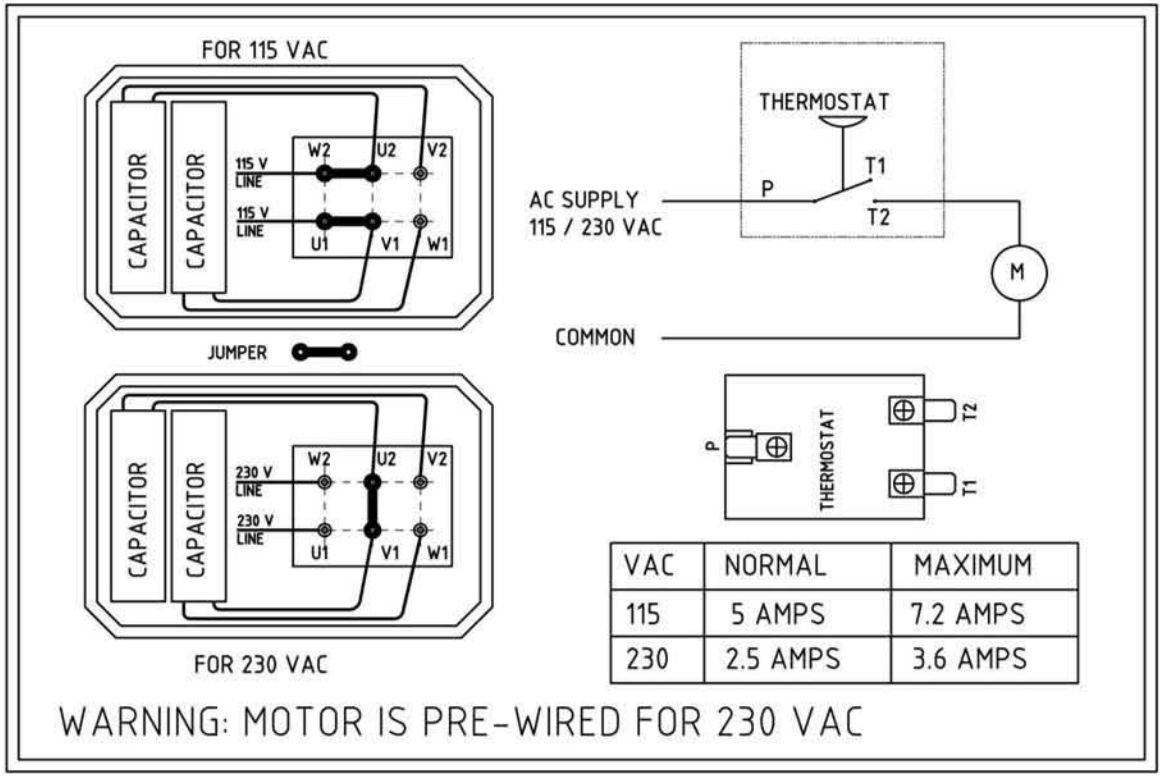

VAC	NORMAL	MAXIMUM
115	5 AMPS	7.2 AMPS
230	2.5 AMPS	3.6 AMPS

WARNING: MOTOR IS PRE-WIRED FOR 230 VAC

YELLOW BACK GROUND WITH BLACK TEXT
TAG LOCATED ABOVE THE CONDUIT BOX MOUNTED
ON THE SIDE OF THE FRAME

3 - Technical specifications

3.1 - Thermal exchange diagram

The values indicated in the diagram refer to hydraulic oil with a kinematic viscosity of 32 cSt at 104°F **and an ambient temperature during testing of 68°F.**

$$\Delta T = T_{oil\ IN} - T_{air\ IN}$$

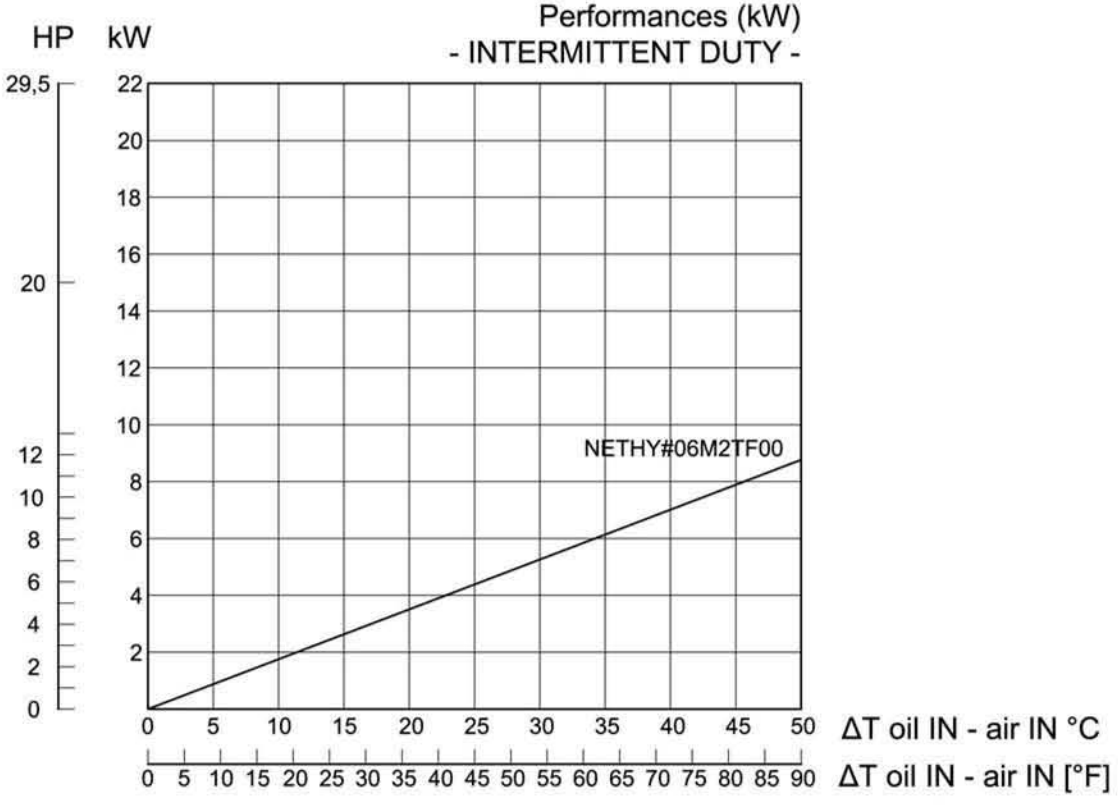

3.2 - Plumbing diagram

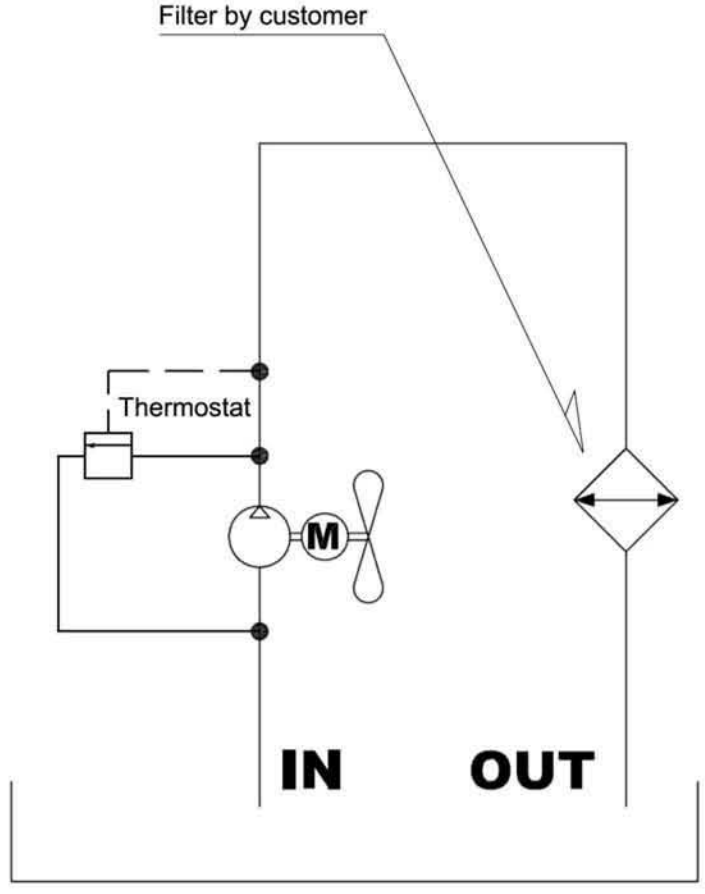

3.3 - Operating features

		NETHY#06M2TF00
Dispersion when dT = 63 °F (ambient temperature 68°F)	kW kCal/h BTU	6,98 6000 23810
Pump flow rate	l/min USGPM	36 9,5
Fan capacity	m³/h CFM	1000 588
Oil viscosity		parameter 10 - 100 cSt
Running speed	giri RPM	1750
Average noise level	dB(A)	67
Weight	DaN LBS	35 78,7
MIN-MAX oil temp	°C °F	20-70 68-150
Max admitted pressure	bar PSI	4 58
Required NpsH	bar PSI	-0,4 -5,8

Do not start the cooler during low winter temperature when the oil viscosity might be higher than indicated above indicated. Long suction pipe lines need to be filled in with oil (priming) prior to first start up of the pump.

Do not bend or throttle the pipe.

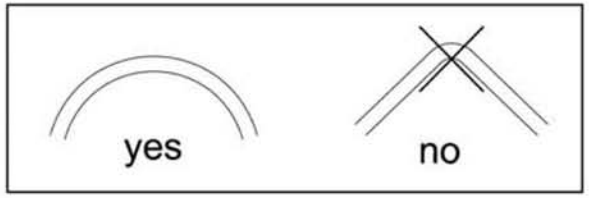

4 - Typical installation

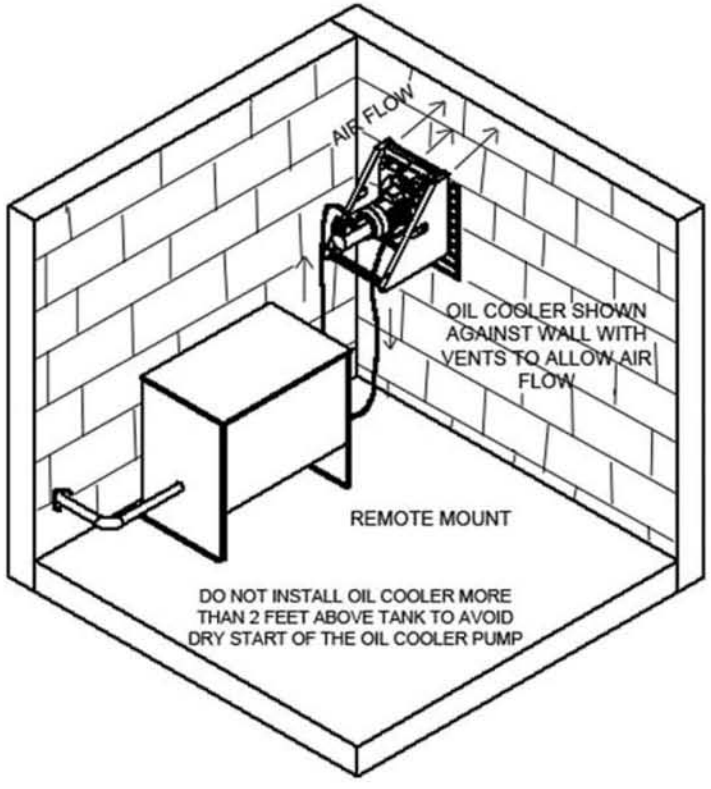

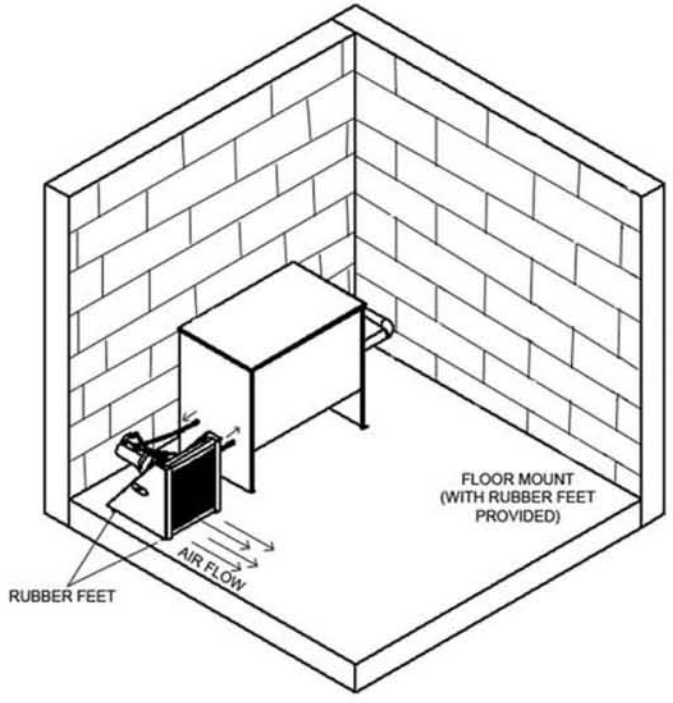

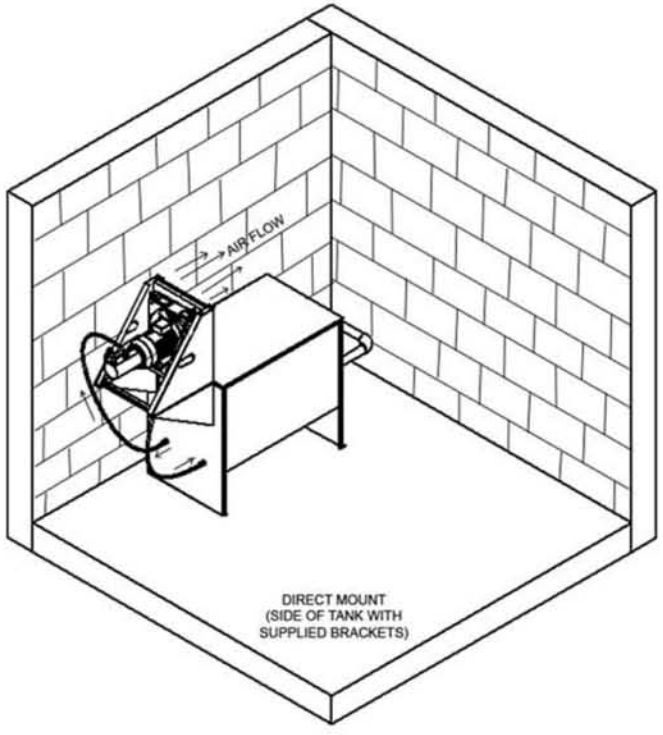

IMPORTANT !!: Fittings on the power unit side have to match with the internal diameter of the hose (1 1/4”). If there are bubbles inside oil tank when cooler is working, hose connections may not be airtight, double check that all hose connections are airtighht.

4 - Typical installation *(continue...)*

		inside diameter of hose: 1 1/4"		
A	NETHY#06M2TF00	maximum length of hose:32,8 ft	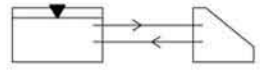	Power unit and cooler almost at the same level
B	NETHY#06M2TF00	maximum length of hose:42,7 ft	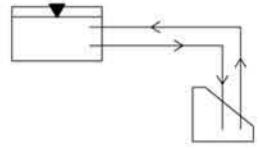	Power unit at 1 floor above (13,1 feet approx) the cooler
C	NETHY#06M2TF00	maximum length of hose:19,7 ft	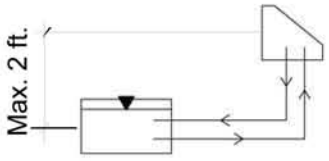	Oil cooler located maximum 2 feet above power unit

SUCTION LINE DEVELOPMENT LENGTH:
Calculated for a typical viscosity of 75 cSt
Every 90 degree elbow subtract 6 feet from the max lenght of the hose

5 - General information

5.1 - Introduction

This manual is intended for use by operators of air-oil heat exchanger units of the NETHY#06M2TF00 series.
Although this document contains all the indications and warnings necessary for the correct use of the machine, it is assumed that current safety regulations are complied to in the area where the machine is installed.
The instruction manual is not an accessory, but an integral part of the heat exchanger. It should be kept in good condition, near the cooler unit, and should be handed over to any user or final user of the heat exchanger. The manual should not be damaged, has to be kept integral (do no tear pages away) and kept safe from humidity and oil, without deteriorating its readability.

5.2 - Symbols description

/ Important for CE certification

+ Important notice



WARNING SIGN

5.3 - System description

The SEIM air-oil heat exchanger unit is extremely efficient in carrying out its intended task of cooling the oil in the hydraulic unit in which they are installed.
The heart of the circuit consists of a SEIM triple screw pump, highly reliable and silent.
The oil is cooled using air produced by a fan mounted coaxially with the screw pump.



- When possible suggested elbow – pipe for oil inlet should be UPWARD in order to keep some oil inside the pump.
- Hose connections need to be airtight; in case that at restart the system shows large air bubbles inside oil recheck tightness.
- When possible at hose suction foresee a strainer for preventing inlet of foreign material.
- Before first start add oil where possible, even a little quantity in suction port – line is an important help for first start .
- Do not run dry.
- Do not run in cold condition, with cold oil.

6 - Operating information

6.1 - Operating standard

In order to ensure the best functioning of the SEIM heat exchanger, the unit should be installed in a clean environment where suitable climatic conditions can be guaranteed (68-104°F).
Installation and maintenance staff should be trained and qualified; SEIM declines all responsibility for damage or risk occurring due to bad connections carried out by unqualified persons or due to the incorrect use of the unit.
Particular attention should be paid to ensure a minimum distance of 1.25 inches between the radiator side of the unit and the wall of the room where the heat exchanger is installed. The fan side should be kept clear and should be at a distance of the least 3 feet from the nearest wall.



It is important that the cooling oil has the required chemical characteristics and density, i.e. hydraulic oil only with a viscosity of between 10-100 cSt should be used; suspended polluttants should be non-abrasive and have a max. diameter of 300 microns. The cooling oil should maintain its kinelatic viscosity characteristics even at high temperatures up to at least 195 °F.

Do not cover the fan protection grate as this would result in the system overheating causing considerable damage.

+ Avoid cleaning with water.

6.2 - Use

SEIM unit has been specifically designed for cooling the oil present in hydraulic circuits.

+ The use of the machine for any other purpose may cause damage to persons or the machine itself.

+ The manufacturer declines any responsibility whatsoever related to the use of oils different viscosity and temperature characteristics than those indicated in the pharagraph 3.3.

6.3 - Motor shutdown

The motor must be turned off before routine cleaning operations and before any eventual repair work is carried out.
In order to ensure maximum safety conditions, the following provisions must be applied:

a) When the machine is running, ensure that the purpose it serves is not in a critical phase whereby a temporary pause in the SEIM unit could cause damage.

b) If the above mentioned situation arises, disconnect the main switch.

c) Allow a time lapse of at least two minutes after the main switch has been turned off before beginning maintenance operations.

6.4 - Machine handling

+ Do not overturn the cooler unit during transport. Please follow the warnings on the package

6.5 - Recommendations

+ At first motor start-up limit the operation to the short time necessary to check that the sense of rotation corresponds to the one shown on the pump nameplate, to prevent partial or complete damage of the pump.

+ In case the line will not prime immediately, stop the motor within 30 seconds and repeat the operation at intervals of a few seconds. If the line will not prime verify the system conformity.

+ Protect the pump from foreign particles by a proper filtration system. Verify the recommended filtration level on the technical data sheet.

6.6 - Trouble Shoot

+ The motor does not turn:
  1. Check if have power.
  2. Check to see if wired properly according to incoming voltage
  3. Check thermostat setting
+ Motor running sluggish:
  1. Check to see if wired properly according to incoming voltage
  2. Check Typical Installation Chart - A.B.C.
+ There is no suction but motor is running:
  1. Check the fan turning direction which should turn counter-clockwise
  2. Check the hose connection and seal

7 - Spare parts

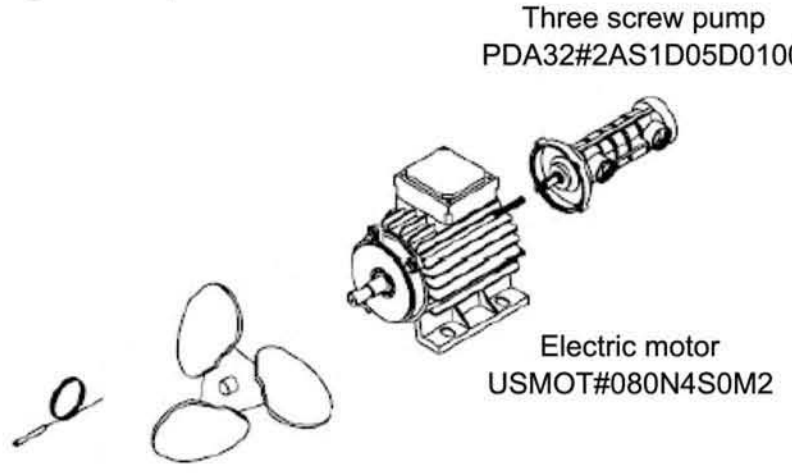

N°	Description
PDA032&USMOT	Pump &Motor Ass'y
1VENT#3518	Fan
1TERMUS	Thermostat

Spare parts kit

8 - Installation / NETHY station fitting

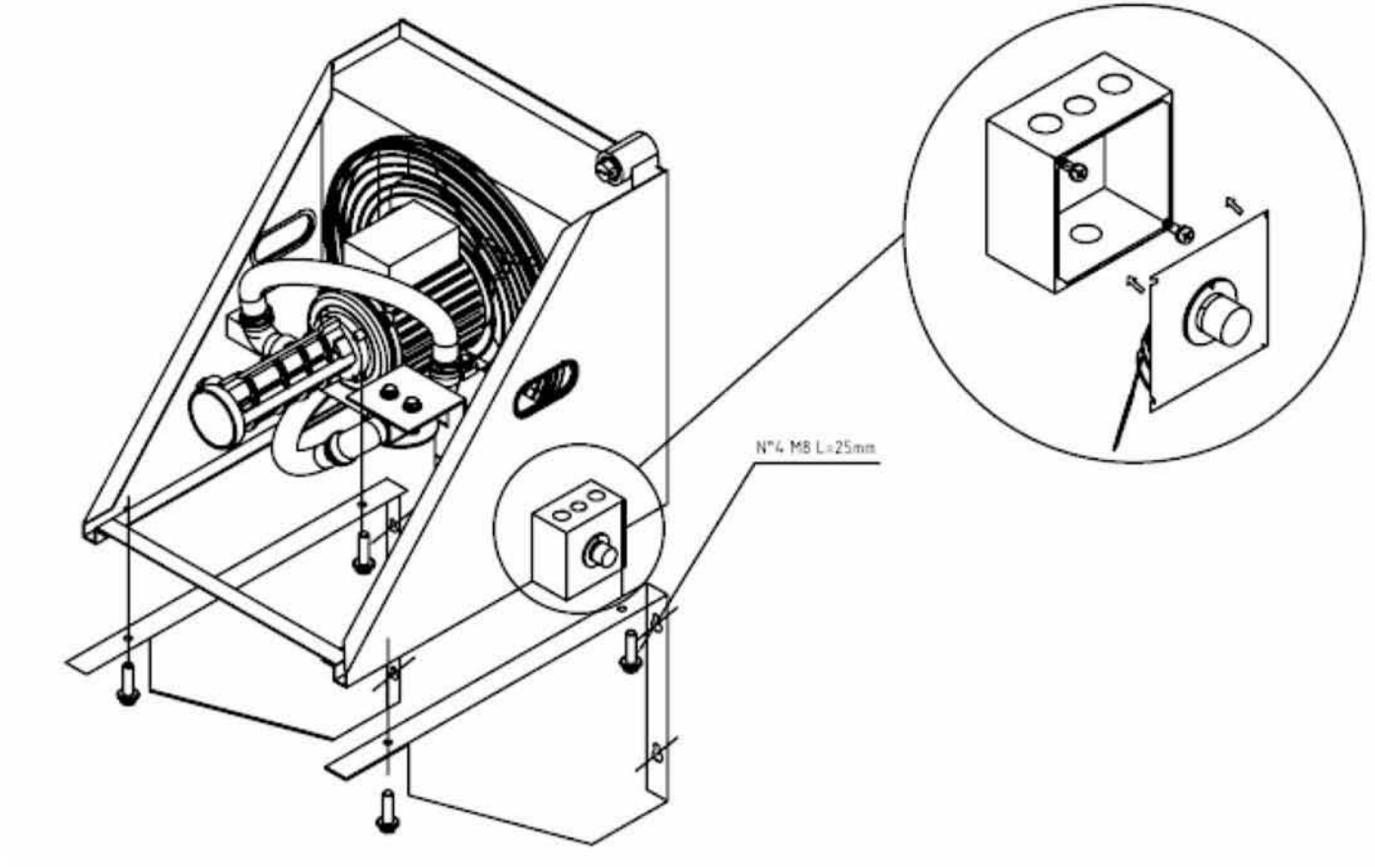

For dimensions see the sect.1.1 in this manual