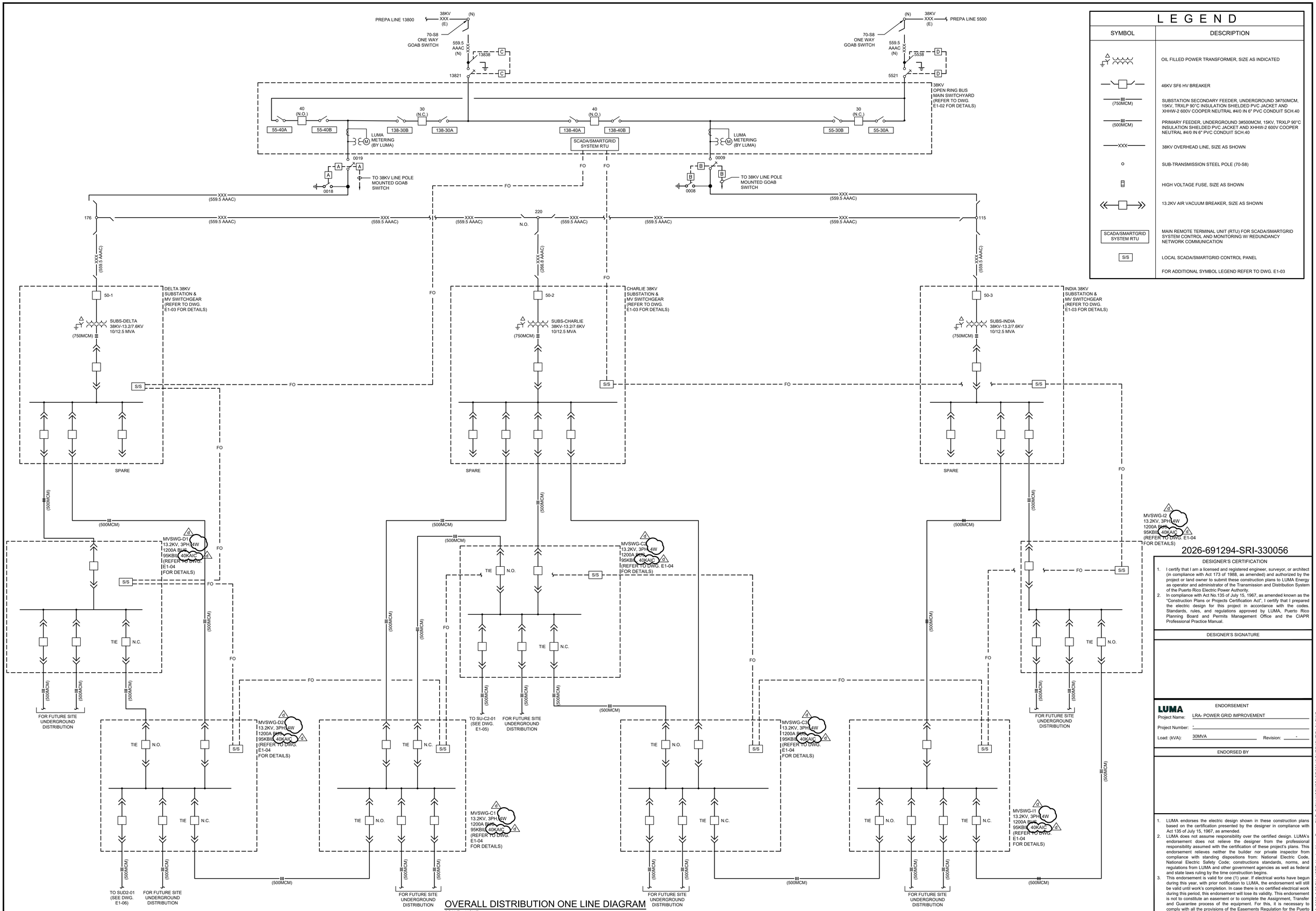

OVERALL DISTRIBUTION ONE LINE DIAGRAM

SCALE: NONE

LEGEND

SYMBOL	DESCRIPTION
	OIL FILLED POWER TRANSFORMER, SIZE AS INDICATED
	46KV SF6 HV BREAKER
(750MCM)	SUBSTATION SECONDARY FEEDER, UNDERGROUND 3#750MCM, 15KV, TRXLP 90°C INSULATION SHIELDED PVC JACKET AND XHHW-2 600V COOPER NEUTRAL #4/0 IN 6" PVC CONDUIT SCH.40
(500MCM)	PRIMARY FEEDER, UNDERGROUND 3#500MCM, 15KV, TRXLP 90°C INSULATION SHIELDED PVC JACKET AND XHHW-2 600V COOPER NEUTRAL #4/0 IN 6" PVC CONDUIT SCH.40
XXX	38KV OVERHEAD LINE, SIZE AS SHOWN
	SUB-TRANSMISSION STEEL POLE (70-S8)
	HIGH VOLTAGE FUSE, SIZE AS SHOWN
	13.2KV AIR VACUUM BREAKER, SIZE AS SHOWN
SCADA/SMARTGRID SYSTEM RTU	MAIN REMOTE TERMINAL UNIT (RTU) FOR SCADA/SMARTGRID SYSTEM CONTROL AND MONITORING W/ REDUNDANCY NETWORK COMMUNICATION
S/S	LOCAL SCADA/SMARTGRID CONTROL PANEL
	FOR ADDITIONAL SYMBOL LEGEND REFER TO DWG. E1-03

2026-691294-SRI-330056

DESIGNER'S CERTIFICATION

1. I certify that I am a licensed and registered engineer, surveyor, or architect (in compliance with Act 173 of 1988, as amended) and authorized by the project or land owner to submit these construction plans to LUMA Energy as operator and administrator of the Transmission and Distribution System of the Puerto Rico Electric Power Authority.
2. In compliance with Act No.135 of July 15, 1967, as amended known as the "Construction Plans or Projects Certification Act", I certify that I prepared the electric design for this project in accordance with the codes, Standards, rules, and regulations approved by LUMA, Puerto Rico Planning Board and Permits Management Office and the CIAPR Professional Practice Manual.

DESIGNER'S SIGNATURE

LUMA

ENDORSEMENT

Project Name: LRA- POWER GRID IMPROVEMENT

Project Number: -

Load: (kVA): 30MVA Revision: -

ENDORSED BY

1. LUMA endorses the electric design shown in these construction plans based on the certification presented by the designer in compliance with Act 135 of July 15, 1967, as amended.
2. LUMA does not assume responsibility over the certified design. LUMA's endorsement does not relieve the designer from the professional responsibility assumed with the certification of these project's plans. This endorsement relieves neither the builder nor private inspector from compliance with standing dispositions from: National Electric Code, National Electric Safety Code; constructions standards, norms, and regulations from LUMA and other government agencies as well as federal and state laws ruling by the time construction begins.
3. This endorsement is valid for one (1) year. If electrical works have begun during this year, with prior notification to LUMA, the endorsement will still be valid until work's completion. In case there is no certified electrical work during this period, this endorsement will lose its validity. This endorsement is not to constitute an easement or to complete the Assignment, Transfer and Guarantee process of the equipment. For this, it is necessary to comply with all the provisions of the Easements Regulation for the Puerto Rico Electric Power Authority (7282 of 2007).

CMA ARCHITECTS & ENGINEERS LLC
1509 Ave FD Roosevelt Ste 200
Guaynabo, PR 00968-2706
Tel: 787-792-1509
Fax: 787-782-0687
E-mail: cma@cmapr.com
www.cmapr.com

© 2026 CMA A&E LLC

ROOSEVELT ROADS PUERTO RICO

ELECTRICAL POWER GRID

FEMA PA DR-4339 PROJECT 95275

LOCAL REDEVELOPMENT AUTHORITY FOR ROOSEVELT ROADS

CEIBA PUERTO RICO

DATE		REVISIONS	BY
10/23/2026	4	ADDENDUM NO. 3 (IFP)	CLM
08/17/2026	3	ISSUED FOR EQUIPMENT PROCUREMENT	CLM
02/26/2026	2	60% PRELIMINARY DESIGN (ELEC)	CLM
01/30/2026	1	35% CONCEPTUAL DESIGN	CLM

DATE	REVISIONS	BY

DATE	REVISIONS	BY

Job No.	22212
SCALE	NONE
DATE	07/20/2023
DRAWN BY	CAD
CHECKED BY	CLM

OVERALL DISTRIBUTION ONE LINE DIAGRAM

TITLE

E1-01

DATE: Wednesday, October 28, 2026 2:35 PM USER: Nerdys Matos Perez FILE: C:\DM WORKSPACE\2223 2\CHECKOUT\E1-101.DWG

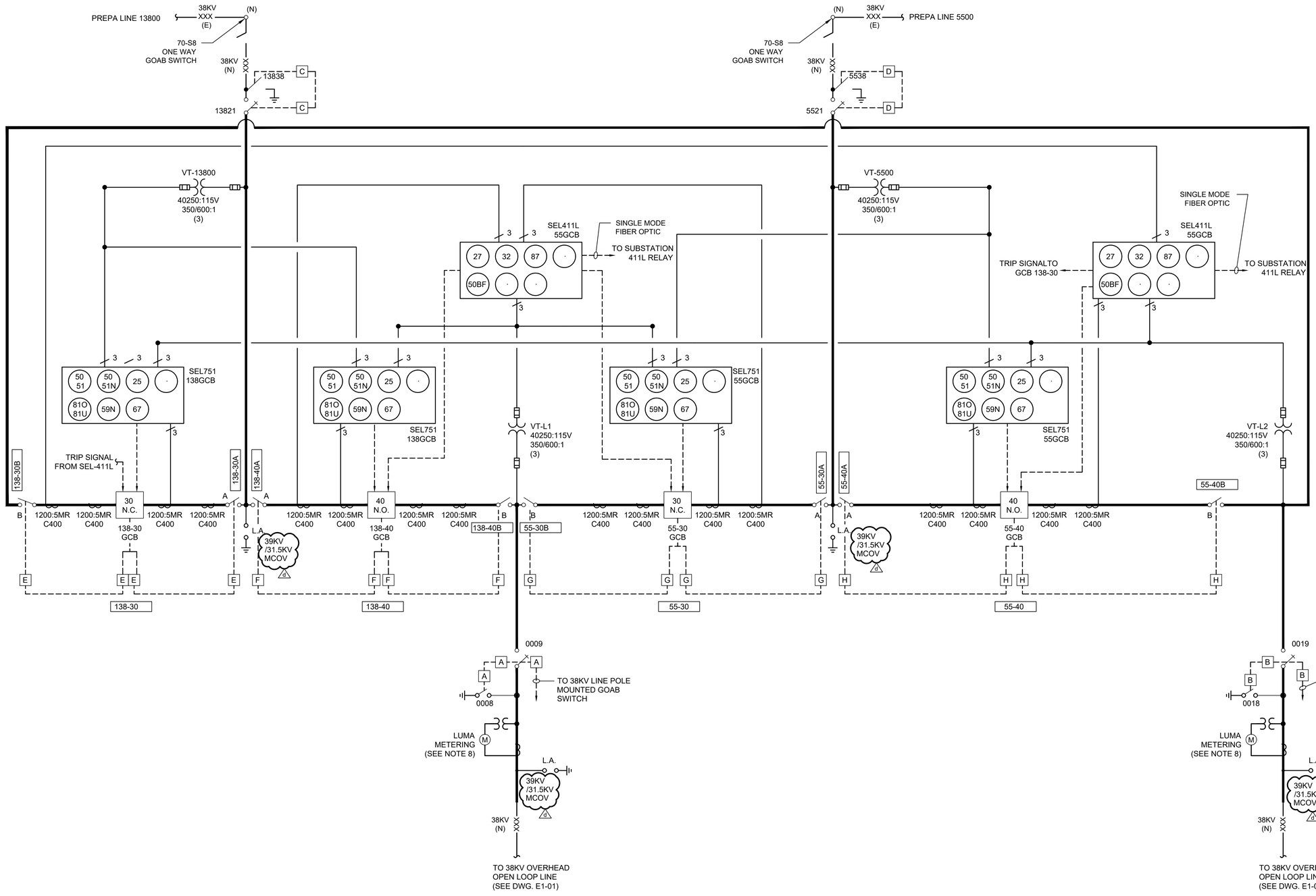

38KV SWITCHYARD ONE LINE DIAGRAM

SCALE: NONE

NOTES

1. SEE DRAWING E1-03 FOR ONE LINE DIAGRAM LEGEND.
2. ALL PROTECTION RELAYS SHALL INCLUDED TEST SWITCHES FOR CURRENT, VOLTAGES AND COMMAND INPUTS.
3. 38KV SF6 BREAKER MANUFACTURER SHALL PROVIDE AS PART OF THE EQUIPMENT SUBMITTAL ALL THE AC AND DC SCHEMATICS WIRING DIAGRAMS ASSOCIATED TO THE PROTECTION SCHEME CONTROL AND AC UTILITIES. THESE DRAWINGS SHALL BE SUBMITTED FOR APPROVAL.
4. ALL RELAYS SHALL HAVE COMMUNICATION AND CONTROL CAPABILITY TO CONNECT TO FUTURE MICROGRID SYSTEM.
5. ALL RELAYS WITH SYNCHRONIZING (DEVICE 25) SHALL HAVE SYNC CHECK PROTECTION.
6. MICROGRID CONTROL AND OPERATION SCHEME AND INTEGRATION, INCLUDING WIRING DETAILS, BY OTHERS.
7. REFER TO REALY MANUFACTURER SHOP DRAWING FOR EXACT RELAY POWER (DC) CONNECTION.
8. METER, CT AND VT SPECIFICATION BY LUMA .

2026-691294-SRI-330056

DESIGNER'S CERTIFICATION

1. I certify that I am a licensed and registered engineer, surveyor, or architect (in compliance with Act 173 of 1988, as amended) and authorized by the project or land owner to submit these construction plans to LUMA Energy as operator and administrator of the Transmission and Distribution System of the Puerto Rico Electric Power Authority.
2. In compliance with Act No.135 of July 15, 1967, as amended known as the "Construction Plans or Projects Certification Act", I certify that I prepared the electric design for this project in accordance with the codes, Standards, rules, and regulations approved by LUMA, Puerto Rico Planning Board and Permits Management Office and the CIAPR Professional Practice Manual.

DESIGNER'S SIGNATURE

LUMA

ENDORSEMENT

Project Name: LRA- POWER GRID IMPROVEMENT

Project Number: -

Load: (kVA): 30MVA Revision: -

ENDORSED BY

1. LUMA endorses the electric design shown in these construction plans based on the certification presented by the designer in compliance with Act 135 of July 15, 1967, as amended.
2. LUMA does not assume responsibility over the certified design. LUMA's endorsement does not relieve the designer from the professional responsibility assumed with the certification of these project's plans. This endorsement relieves neither the builder nor private inspector from compliance with standing dispositions from: National Electric Code, National Electric Safety Code; constructions standards, norms, and regulations from LUMA and other government agencies as well as federal and state laws ruling by the time construction begins.
3. This endorsement is valid for one (1) year. If electrical works have begun during this year, with prior notification to LUMA, the endorsement will still be valid until work's completion. In case there is no certified electrical work during this period, this endorsement will lose its validity. This endorsement is not to constitute an easement or to complete the Assignment, Transfer and Guarantee process of the equipment. For this, it is necessary to comply with all the provisions of the Easements Regulation for the Puerto Rico Electric Power Authority (7282 of 2007).

CMA ARCHITECTS & ENGINEERS LLC
1509 Ave FD Roosevelt Ste 200
Guaynabo, PR 00968-2706
Tel: 787-792-1509
Fax: 787-782-0687
E-mail: cma@cmapr.com
www.cmapr.com
© 2026 CMA A&E LLC

ROOSEVELT ROADS PUERTO RICO

ELECTRICAL POWER GRID

FEMA PA DR-4339 PROJECT 95275
LOCAL REDEVELOPMENT AUTHORITY FOR ROOSEVELT ROADS
CEIBA PUERTO RICO

DATE		REVISIONS	BY
10/23/2026	Δ	ADDENDUM NO. 3 (IFP)	CLM
10/12/2026	Δ	90% CONSTRUCTION DOCUMENTS	CLM
08/31/2026	Δ	75% PROGRESS PRINT (IFR)	CLM
08/17/2026	Δ	ISSUED FOR EQUIPMENT PROCUREMENT	CLM

Job No.	22212
SCALE	NONE
DATE	07/29/2026
DRAWN BY	CAD
CHECKED BY	CLM

38KV SWITCHYARD ONE LINE DIAGRAM

TITLE

E1-02

DATE: Wednesday, October 28, 2026 3:29 PM USER: Nerdys Matos Perez FILE: C:\DM WORKSPACE\22212\CHECKOUT\E1-02.DWG

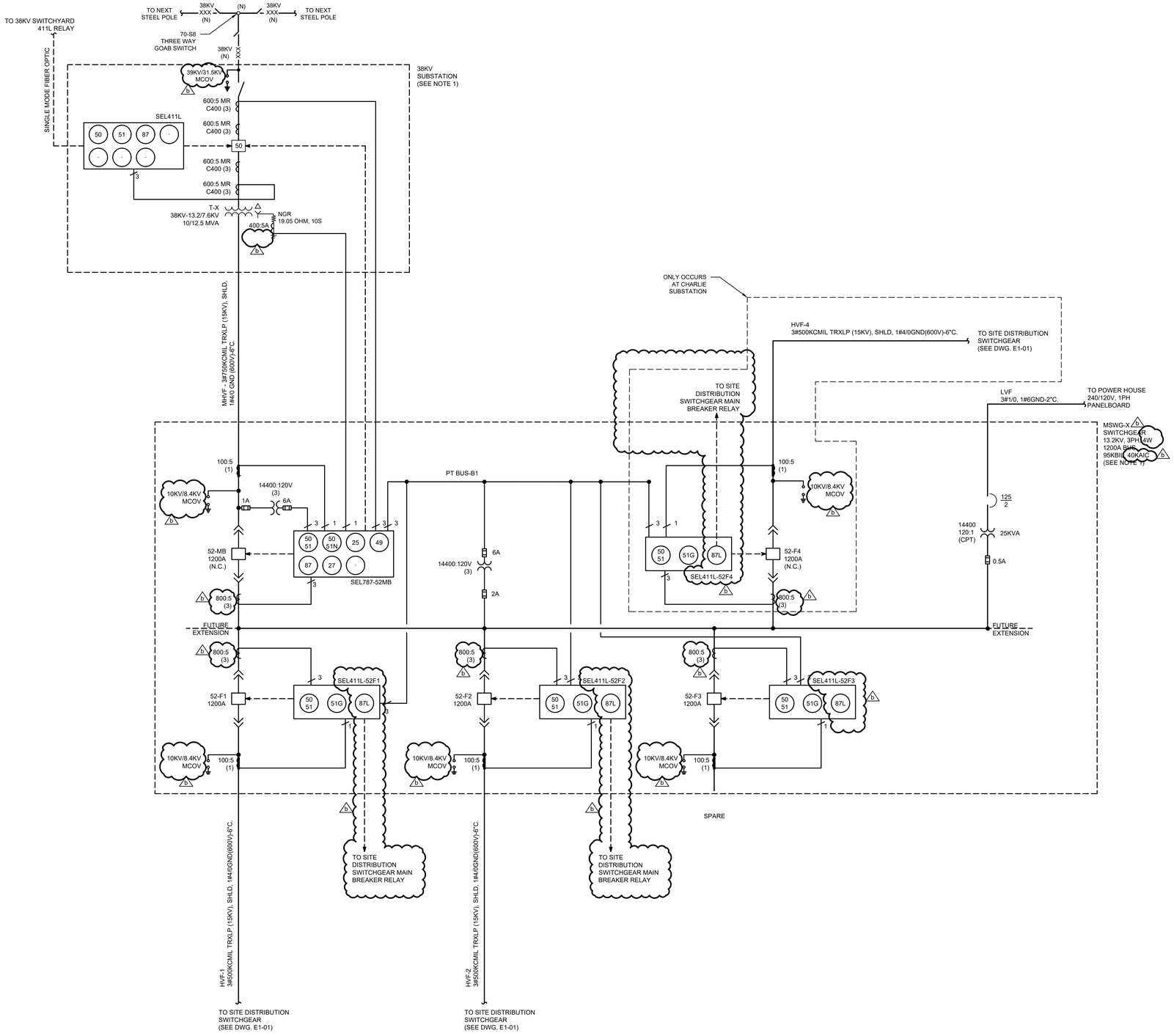

LEGEND

SYMBOL	DESCRIPTION
	HIGH VOLTAGE SF6 GAS INSULATED, 3000A, 48.3KV, 250KBIL, 40KAIC CIRCUIT BREAKER.
	MEDIUM VOLTAGE 13.2KV, 95KBIL, 40KAIC VACUUM CIRCUIT BREAKER (SIZE AS SHOWN ON DRAWINGS).
	TORDIDAL CURRENT TRANSFORMER (SIZE AS SHOWN ON DRAWINGS)
	TORDIDAL ZERO CURRENT TRANSFORMER (SIZE AS SHOWN ON DRAWINGS)
	VOLTAGE TRANSFORMER (SIZE AS SHOWN ON DRAWING)
	AIR NO LOAD BREAKER SWITCH GROUP OPERATED
	AIR LOAD BREAK SWITCH (GROUP OPERATED)
89 - 1 - 2	DEVICE NUMBER ASSOCIATED CIRCUIT BREAKER NO. DESIGNATION NO. (LINE SWITCH)
	CLASS MCOV LIGHTING ARRESTER (SIZE AND VOLTAGE TYPE AS SHOWN)
	LOW VOLTAGE CIRCUIT BREAKER
	OILED FILLED TRANSFORMER (SIZE AS SHOWN)
K	KIRK KEY INTERLOCK (COORDINATION AS SHOWN)
	GROUNDING RESISTANCE (SIZE TO BE DETERMINED)
50 51	OVERCURRENT AND TIME-OVERCURRENT PROTECTION RELAY FUNCTION
50 51N	NUETRAL OVERCURRENT AND TIME-OVERCURRENT PROTECTION RELAY FUNCTION
51G	GROUND TIME-OVERCURRENT PROTECTION RELAY FUNCTION
25	SYNCHRONISM CHECK RELAY FUNCTION
27	DEFINITE-TIME UNDERVOLTAGE FUNCTION
59	OVER-VOLTAGE PROTECTION RELAY FUNCTION
59N	NEUTRAL VOLTAGE DISPLACEMENT RELAY FUNCTION
27	UNDER-VOLTAGE PROTECTION RELAY FUNCTION
81O	OVER FREQUENCY PROTECTION RELAY FUNCTION
81U	UNDER FREQUENCY PROTECTION RELAY FUNCTION
32	DIRECTIONAL POWER PROTECTION RELAY FUNCTION
67	DIRECTIONAL OVERCURRENT RELAY FUNCTION
50BF	BREAKER FAILURE RELAY FUNCTION
87	CURRENT DIFFERENTIAL RELAY FUNCTION

NOTES

1. TYPICAL ONE LINE DIAGRAM FOR CHARLIE, DELTA AND INDIA SUBSTATIONS.
2. ALL PROTECTION RELAYS SHALL INCLUDED TEST SWITCHES FOR CURRENT, VOLTAGES AND COMMAND INPUTS.
3. 46KV SF6 GAS INSULATED BREAKER AND 13.2KV VACUUM BREAKER SWITCHGEAR MANUFACTURER SHALL PROVIDE AS PART OF THE EQUIPMENT SUBMITTAL ALL THE AC AND DC SCHEMATICS WIRING DIAGRAMS ASSOCIATED TO THE PROTECTION SCHEME CONTROL AND AC UTILITIES. THESE DRAWINGS SHALL BE SUBMITTED FOR APPROVAL.
4. ALL RELAYS SHALL HAVE COMMUNICATION AND CONTROL CAPABILITY TO CONNECT TO FUTURE MICROGRID SYSTEM.
5. ALL RELAYS WITH SYNCHRONIZING (DEVICE 25) SHALL HAVE SYNC CHECK PROTECTION.
6. MICROGRID CONTROL AND OPERATION SCHEME AND INTEGRATION, INCLUDING WIRING DETAILS, BY OTHERS.
7. REFER TO MV SWITCHGEAR MANUFACTURER SHOP DRAWING FOR EXACT RELAY POWER (DC) CONNECTION.

2026-691294-SRI-330056

DESIGNER'S CERTIFICATION

1. I certify that I am a licensed and registered engineer, surveyor, or architect (in compliance with Act 173 of 1988, as amended) and authorized by the project or land owner to submit these construction plans to LUMA Energy as operator and administrator of the Transmission and Distribution System of the Puerto Rico Electric Power Authority.
2. In compliance with Act No.135 of July 15, 1967, as amended known as the "Construction Plans or Projects Certification Act", I certify that I prepared the electric design for this project in accordance with the codes, Standards, rules, and regulations approved by LUMA, Puerto Rico Planning Board and Permits Management Office and the CIAPR Professional Practice Manual.

DESIGNER'S SIGNATURE

LUMA

ENDORSEMENT

Project Name: LRA- POWER GRID IMPROVEMENT

Project Number: -

Load: (kVA): 30MVA Revision: -

ENDORSED BY

1. LUMA endorses the electric design shown in these construction plans based on the certification presented by the designer in compliance with Act 135 of July 15, 1967, as amended.
2. LUMA does not assume responsibility over the certified design. LUMA's endorsement does not relieve the designer from the professional responsibility assumed with the certification of these project's plans. This endorsement relieves neither the builder nor private inspector from compliance with standing dispositions from: National Electric Code, National Electric Safety Code; constructions standards, norms, and regulations from LUMA and other government agencies as well as federal and state laws ruling by the time construction begins.
3. This endorsement is valid for one (1) year. If electrical works have begun during this year, with prior notification to LUMA, the endorsement will still be valid until work's completion. In case there is no certified electrical work during this period, this endorsement will lose its validity. This endorsement is not to constitute an easement or to complete the Assignment, Transfer and Guarantee process of the equipment. For this, it is necessary to comply with all the provisions of the Easements Regulation for the Puerto Rico Electric Power Authority (7282 of 2007).

MAIN SUBSTATIONS ONE LINE DIAGRAM

SCALE: NTS

CMA ARCHITECTS & ENGINEERS LLC
1509 Ave FD Roosevelt Ste 200
Guaynabo, PR 00968-2706
Tel: 787-792-1509
Fax: 787-782-0687
E-mail: cma@cmapr.com
www.cmapr.com
© 2026 CMA A&E LLC

ROOSEVELT ROADS PUERTO RICO

ELECTRICAL POWER GRID

FEMA PA DR-4339 PROJECT 95275
LOCAL REDEVELOPMENT AUTHORITY FOR ROOSEVELT ROADS
CEIBA PUERTO RICO

DATE		REVISIONS	BY
10/23/2026	Δ	ADDENDUM NO. 3 (IFP)	CLM
08/17/2026	Δ	ISSUED FOR EQUIPMENT PROCUREMENT	CLM

Job No.	22212
SCALE	NONE
DATE	07/29/2026
DRAWN BY	CAD
CHECKED BY	CLM

MAIN SUBSTATIONS ONE LINE DIAGRAM (TITLE)

E1-03

DATE: Wednesday, October 28, 2026 3:36 PM USER: Nerdys Matos Perez FILE: C:\DM WORKSPACE\22212\CHECKOUT\E1-03.DWG

NOTES

1. TYPICAL ONE LINE DIAGRAM FOR DISTRIBUTION SWITCHGEARS: MV-SWG-D1, D2, C1, C2, C3, I1 & I2. REFER TO DRAWING E1-01 FOR MEDIUM VOLTAGE (MV) BREAKERS LAYOUT FOR EACH SWITCHGEAR AND NORMALLY OPEN OR CLOSED TIE BREAKER CONFIGUTATION.
2. REFER TO DRAWING E1-02 FOR ONE LINE DIAGRAM LEGEND.
3. ALL PROTECTION RELAYS SHALL INCLUDED TEST SWITCHES FOR CURRENT, VOLTAGES AND COMMAND INPUTS.
4. 13.2KV VACUUM BREAKER SWITCHGEAR MANUFACTURER SHALL PROVIDE AS PART OF THE EQUIPMENT SUBMITTAL ALL THE AC AND DC SCHEMATICS WIRING DIAGRAMS ASSOCIATED TO THE PROTECTION SCHEME CONTROL AND AC UTILITIES. THESE DRAWINGS SHALL BE SUBMITTED FOR APPROVAL.
5. ALL RELAYS SHALL HAVE COMMUNICATION AND CONTROL CAPABILITY TO CONNECT TO FUTURE MICROGRID SYSTEM.
6. ALL RELAYS WITH SYNCHRONIZING (DEVICE 25) SHALL HAVE SYNC CHECK PROTECTION.
7. MICROGRID CONTROL AND OPERATION SCHEME AND INTEGRATION, INCLUDING WIRING DETAILS BY OTHERS.
8. REFER TO MV SWITCHGEAR MANUFACTURER SHOP DRAWING FOR EXACT RELAY POWER (DC) CONNECTION.

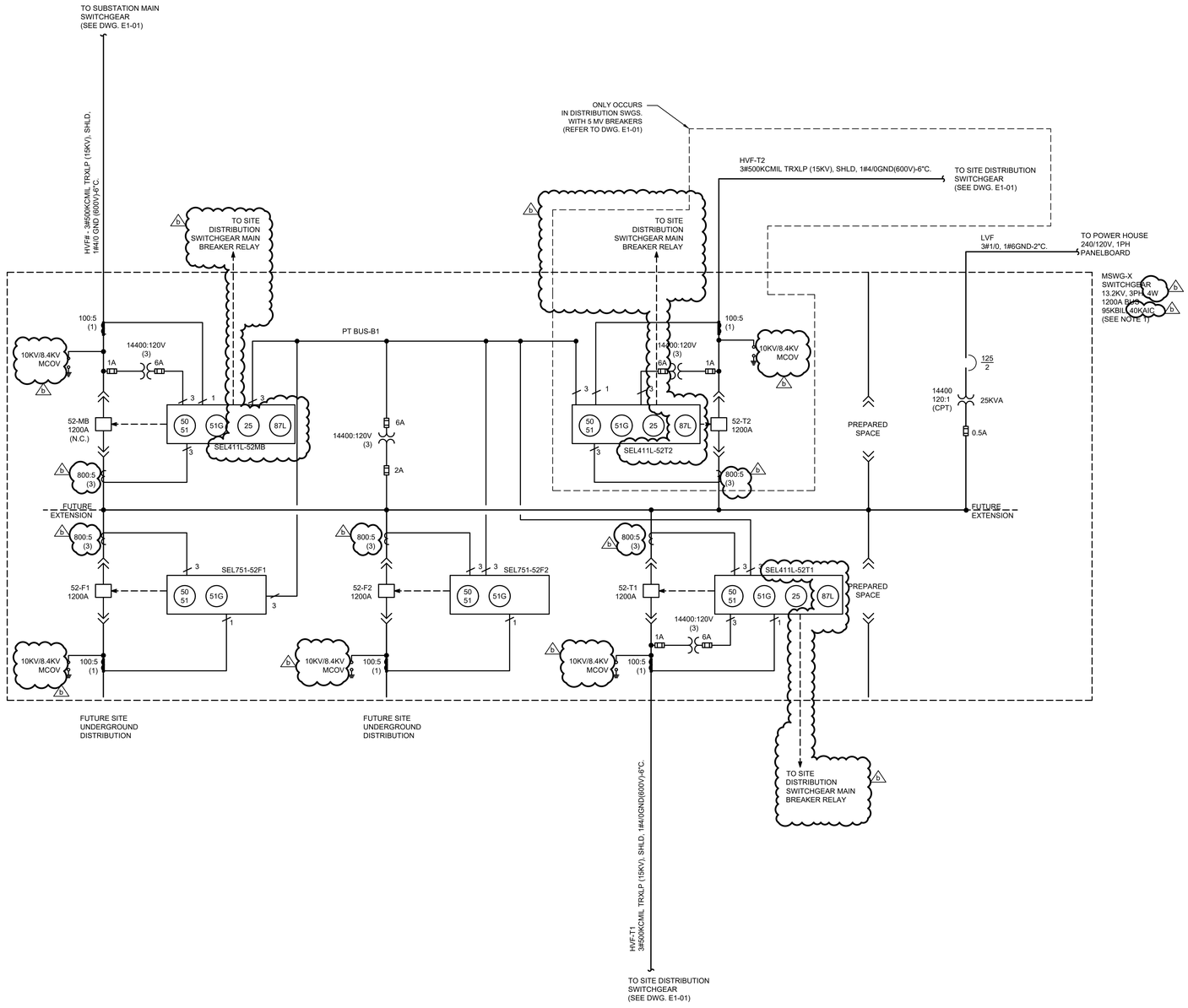

DISTRIBUTION SWITCHGEARS ONE LINE DIAGRAM

SCALE: NTS

2026-691294-SRI-330056

DESIGNER'S CERTIFICATION

1. I certify that I am a licensed and registered engineer, surveyor, or architect (in compliance with Act 173 of 1988, as amended) and authorized by the project or land owner to submit these construction plans to LUMA Energy as operator and administrator of the Transmission and Distribution System of the Puerto Rico Electric Power Authority.
2. In compliance with Act No.135 of July 15, 1967, as amended known as the "Construction Plans or Projects Certification Act", I certify that I prepared the electric design for this project in accordance with the codes, Standards, rules, and regulations approved by LUMA, Puerto Rico Planning Board and Permits Management Office and the CIAPR Professional Practice Manual.

DESIGNER'S SIGNATURE

ENDORSEMENT

LUMA

Project Name: LRA- POWER GRID IMPROVEMENT

Project Number: -

Load: (kVA): 30MVA Revision: -

ENDORSED BY

1. LUMA endorses the electric design shown in these construction plans based on the certification presented by the designer in compliance with Act 135 of July 15, 1967, as amended.
2. LUMA does not assume responsibility over the certified design. LUMA's endorsement does not relieve the designer from the professional responsibility assumed with the certification of these project's plans. This endorsement relieves neither the builder nor private inspector from compliance with standing dispositions from: National Electric Code, National Electric Safety Code; constructions standards, norms, and regulations from LUMA and other government agencies as well as federal and state laws ruling by the time construction begins.
3. This endorsement is valid for one (1) year. If electrical works have begun during this year, with prior notification to LUMA, the endorsement will still be valid until work's completion. In case there is no certified electrical work during this period, this endorsement will lose its validity. This endorsement is not to constitute an easement or to complete the Assignment, Transfer and Guarantee process of the equipment. For this, it is necessary to comply with all the provisions of the Easements Regulation for the Puerto Rico Electric Power Authority (7282 of 2007).

CMA ARCHITECTS & ENGINEERS LLC
1509 Ave FD Roosevelt Ste 200
Guaynabo, PR 00968-2706
Tel: 787-792-1509
Fax: 787-782-0687
E-mail: cma@cmapr.com
www.cmapr.com
© 2026 CMA A&E LLC

ROOSEVELT ROADS PUERTO RICO

ELECTRICAL POWER GRID

FEMA PA DR-4339 PROJECT 95275
LOCAL REDEVELOPMENT AUTHORITY FOR ROOSEVELT ROADS
CEIBA PUERTO RICO

DATE	REVISIONS	BY
10/23/2026	Δ ADDENDUM NO. 3 (IFP)	CLM
08/17/2026	Δ ISSUED FOR EQUIPMENT PROCUREMENT	CLM

Job No.	22212
SCALE	NONE
DATE	07/29/2026
DRAWN BY	CAD
CHECKED BY	CLM

DISTRIBUTION SWITCHGEAR ONE LINE DIAGRAM (TITLE)

E1-04

DATE: Wednesday, October 28, 2026 3:37 PM USER: Nerdys Matos Perez FILE: C:\DM WORKSPACE\2222 I2\CHECKOUT\E1-04.DWG

LEGEND

1. NEW OIL FILLED 3PH, 60HZ, ONAN, TRANSFORMER WITH A CAPACITY OF 10000 /12500 KVA, 38KV DELTA (PRIMARY), 13.2/7.6 KV WYE (SECONDARY), 46 KV/ 250 KBIL CLASS (PRIMARY) AND 15 KV / 95KBIL (SECONDARY) WITH ON LOAD 21 OR 33 FULL CAPACITY TAP CHANGER. OIL SHALL BE OIL SEED OR FR 3 FM APPROVED.(FURNISH BY OWNER AND INSTALL BY THE CONTRACTOR)

   PROVIDE A RSG PIPE FROM THE TRANSFORMER PRESSURE RELIEF VALVE UP TO THE FLOOR TO AVOID OIL DISPERSION DURING A FAULT.
2. TUBING TO CABLE CONNECTOR.
3. POWER FUSES 46KV, 250KBIL, 40KAIC HOOK OPERATED S&C SMD-2C WITH FUSE UNIT (FUSE SIZE 3E).
4. SURGE ARRESTERS, STATION TYPE, 39KV RMS, 31.5KV MCOV COOPER POWER ULTRASIL MODEL#UHA036029A1845H.
5. NOT USED.
6. CURRENT TRANSFORMERS (AT THE HV BREAKER BUSHINGS)
7. POTENTIAL TRANSFORMERS 46000(WYE):115V (WYE) (400:1)
8. NOT USED.
9. ALUMINUM STRUCTURE COMPLETE WITH LIGHTNING BAYONETS, AND DESIGNED FOR A TENSION OF 1000 LBS PER WIRE ± 15 DEGREES IN THE HORIZONTAL PLANE FROM STRAIGHT PULL PLUS 170 MPH WINDS.
10. INSULATOR, SUSPENSION, 10 INCH DIAMETER, ANSI 52-3 GRAY # 70 OR POLYMER EQUIVALENT FOUR UNITS FOR EACH PHASE ONE UNIT FOR GROUNDING WIRE.
11. INSULATOR, POST TYPE, 46KV, NEMA TR 214, GRAY 70 OR SILICONE EQUIVALENT.
12. ANCHOR SHACKLE, 5/8 INCH PIN.
13. BALL CLEVIS, 5/8 INCH.
14. STRAIN CLAMP.
15. CABLE TO CABLE T CONNECTOR
16. INCOMING 38KV LINE.
17. NOT USED.
18. INCOMING GROUNDING WIRE.
19. 1 INCH IPS COPPER.
20. BARE STRANDED COPPER, MHD. # 4/0 AWG.
21. SEMI-FLEX COPPER CONNECTOR, TINNED.
22. REDUCER, 1" INCH IPS COPPER TO 4/0 STRAND COPPER CONDUCTOR (WHERE REQUIRED).
23. CABLE, GROUND, BARE COPPER # 4/0 AWG.
24. CABLE, GROUND, BARE COPPER # 1/0 AWG.
25. GROUND ROD 3/4" X 10'-0" COPPERWELD.
26. TRANSFORMER CONCRETE PAD
27. GROUND CLAMP, 1/0 STRANDED COPPER TO FENCE POST,
28. 24 IN. FLEXIBLE TINNED COPPER BRAID WITH MECHANICAL PRESSURE CONNECTORS.
29. GROUND CLAMP, BRAID TO GATE FRAME.
30. GROUND CLAMP, 1/0 COPPER CONDUCTOR & BRAID TO GATE POST.
31. GROUND ROD CLAMP, 3/4" ROD & 4/0 COPPER CABLE.
32. GROUND CABLE BRAZED JOINT, TYPE AS REQUIRED.
33. SPACE EVERY 3' TO 5'. COPPER TO ALUMINUM GROUND CLAMP, TO SUPPORT GROUND WIRE ON STRUCTURE,
34. TERMINAL, 1-1/0 STRAND COPPER TO 2-HOLE PLATE.
35. BOLT, STAINLESS STEEL, 1" X 1/2" DIA. LOCK & FLAT WASHERS.
36. FENCE, CHAIN-LINK, 8 FT. HIGH WITH BARBED WIRES.
37. BAKED ENAMEL SIGN "DANGER-PELIGRO-ALTO VOLTAJE".
38. POWER FUSE HANDLING TOOL, ADJUSTABLE 12' TO 18', IN A P.V.C. OR FIBERGLASS CONTAINER.
39. CAST ALUMINUM BRACKET, SIMILAR TO HUBBELL NPU LUMINAIRE, HIGH PRESSURE SODIUM, 100W, 120 VOLTS, WITH PHOTOCELL.
40. SPARE POWER FUSES IN A PVC OR FIBER GLASS CONTAINER, OR CABINET.
41. ALUMINUM STRUCTURE DESIGNED FOR A WIND LOAD OF 170MPH. CONTRACTOR SHALL SUBMITTED STRUCTURE SHOP DRAWING FOR EVALUATION.
42. SF6 3000AMP, 38.3KV 250KV BIL CIRCUIT BREAKER (FURNISH BY OWNER AND INSTALL BY THE CONTRACTOR).
43. NOT USED.
44. NOT USED.
45. NOT USED.
46. NOT USED.
47. NOT USED.
48. SEALING BUSHING
49. PIPE TO CABLE GROUNDING CONNECTOR OZ GEDNEY CG6422
50. CABLE SUPPORT MOUNTED WITH A STRUCTOR CHANNEL WELDED TO THE STEEL. KINDORF C-755-4B
51. BARE STRANDED COPPER, MHD 500 MCM

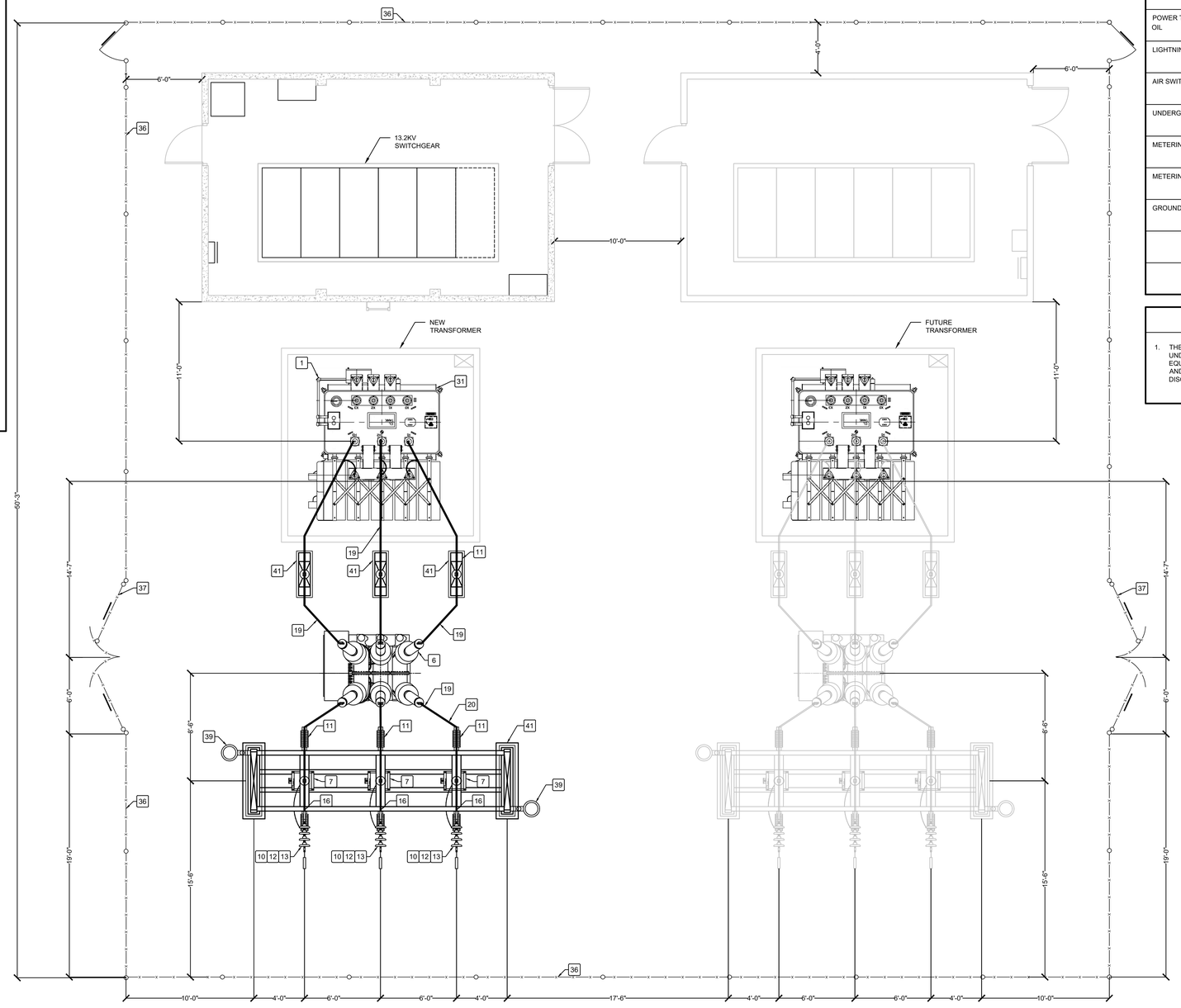

1' 0 1' 2' 5' 10'

SCALE: 1/4"=1'-0"

THE CONTRACTOR SHALL HIRE A TESTING COMPANY TO PERFORMED AND CERTIFY THE FOLLOWING EQUIPMENT TESTS.

EQUIPMENT OR DEVICE	TEST
POWER TRANSFORMER	POWER FACTOR, EXITATION & TURNS RATIO.
POWER TRANSFORMER OIL	POWER FACTOR & ACIDITY.
LIGHTNING ARRESTERS	POWER FACTOR.
AIR SWITCH	CONTACT RESISTANCE.
UNDERGROUND CABLE	DC HIGH POTENTIAL.
METERING PT	POWER FACTOR & TURNS RATIO.
METERING CT	POWER FACTOR.
GROUND MESH	GROUND MESH RESISTANCE. GROUND MESH INTEGRITY.

NOTES

1. THE CONTRACTOR SHALL COORDINATE IN ADVANCE ALL UNDERGROUND CONDUITS INSTALLATION WITH THE EQUIPMENT FINAL SHOP DRAWINGS AND THE STRUCTURAL AND CIVIL DRAWINGS, IN ORDER TO AVOID ANY DISCREPANCIES WITH THE CONDUITS STUB UP LOCATION.

2026-691294-SRI-330056

DESIGNER'S CERTIFICATION

1. I certify that I am a licensed and registered engineer, surveyor, or architect (in compliance with Act 173 of 1988, as amended) and authorized by the project or land owner to submit these construction plans to LUMA Energy as operator and administrator of the Transmission and Distribution System of the Puerto Rico Electric Power Authority.
2. In compliance with Act No.135 of July 15, 1967, as amended known as the "Construction Plans or Projects Certification Act", I certify that I prepared the electric design for this project in accordance with the codes, Standards, rules, and regulations approved by LUMA, Puerto Rico Planning Board and Permits Management Office and the CIAPR Professional Practice Manual.

DESIGNER'S SIGNATURE

LUMA

ENDORSEMENT

Project Name: LRA- POWER GRID IMPROVEMENT

Project Number: -

Load: (kVA): 30MVA Revision: -

ENDORSED BY

1. LUMA endorses the electric design shown in these construction plans based on the certification presented by the designer in compliance with Act 135 of July 15, 1967, as amended.
2. LUMA does not assume responsibility over the certified design. LUMA's endorsement does not relieve the designer from the professional responsibility assumed with the certification of these project's plans. This endorsement relieves neither the builder nor private inspector from compliance with standing dispositions from: National Electric Code, National Electric Safety Code; constructions standards, norms, and regulations from LUMA and other government agencies as well as federal and state laws ruling by the time construction begins.
3. This endorsement is valid for one (1) year. If electrical works have begun during this year, with prior notification to LUMA, the endorsement will still be valid until work's completion. In case there is no certified electrical work during this period, this endorsement will lose its validity. This endorsement is not to constitute an easement or to complete the Assignment, Transfer and Guarantee process of the equipment. For this, it is necessary to comply with all the provisions of the Easements Regulation for the Puerto Rico Electric Power Authority (7282 of 2007).

CMA ARCHITECTS & ENGINEERS LLC

1509 Ave FD Roosevelt Ste 200
Guaynabo, PR 00968-2706
Tel: 787-792-1509
Fax: 787-782-0687
E-mail: cma@cmapr.com
www.cmapr.com

© 2026 CMA A&E LLC

ROOSEVELT ROADS PUERTO RICO

ELECTRICAL POWER GRID

FEMA PA DR-4339 PROJECT 95275

LOCAL REDEVELOPMENT AUTHORITY FOR ROOSEVELT ROADS

CEIBA PUERTO RICO

DATE	REVISIONS	BY
10/12/2026	1 90% CONSTRUCTION DOCUMENTS	CLM
08/31/2026	2 75% PROGRESS PRINT (IFR)	CLM
08/17/2026	3 ISSUED FOR EQUIPMENT PROCUREMENT	CLM
02/26/2026	4 60% PRELIMINARY DESIGN (ELEC)	CLM
01/30/2026	5 35% CONCEPTUAL DESIGN	CLM
10/23/2026	1 ADDENDUM NO. 3 (IFP)	CLM

Job No.	22212
SCALE	1/4"=1'-0"
DATE	01/21/2026
DRAWN BY	CAD
CHECKED BY	CLM

TYPICAL 38KV SUBSTATION LAYOUT PLAN

TITLE

E3-01

DATE: Wednesday, October 29, 2026 3:38 PM USER: Nerdys Matos Perez FILE: C:\DM WORKSPACE\22212\CHECKOUTES-01.DWG

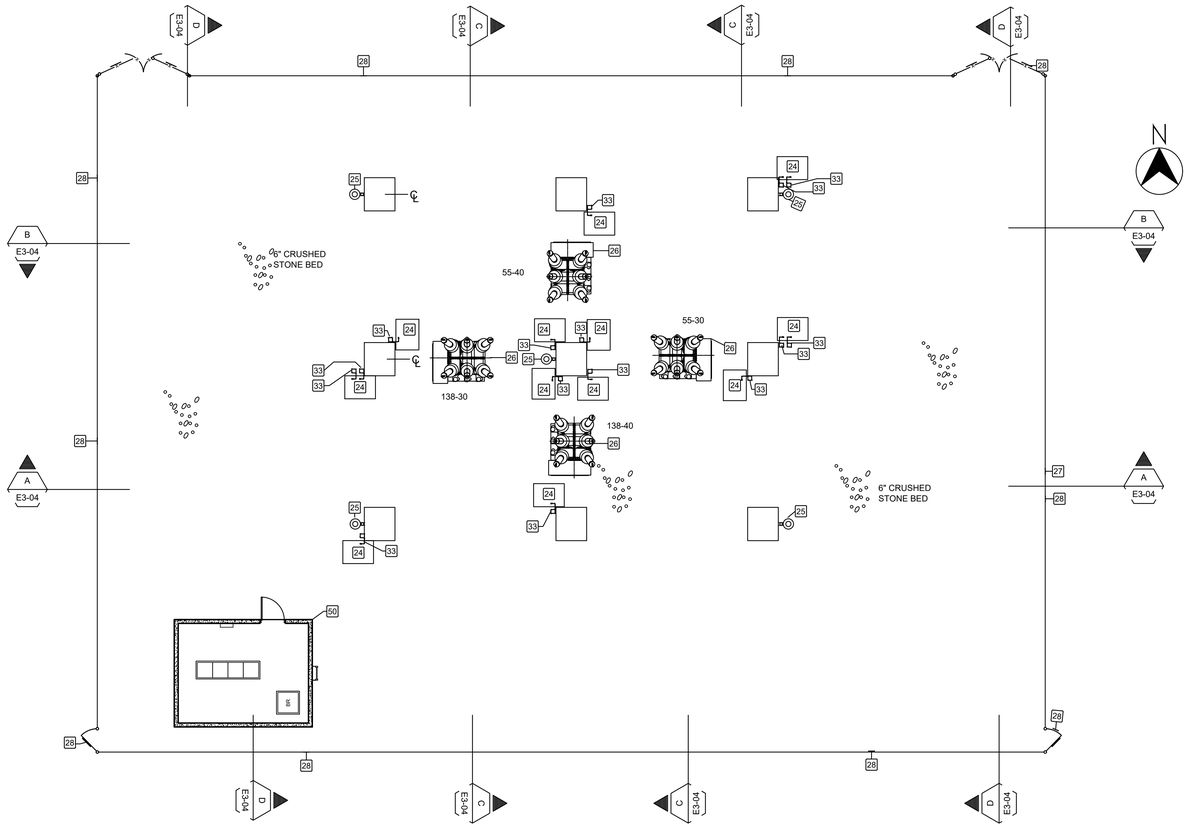

PLAN GRADE LEVEL

SCALE: 1/8"=1'-0"

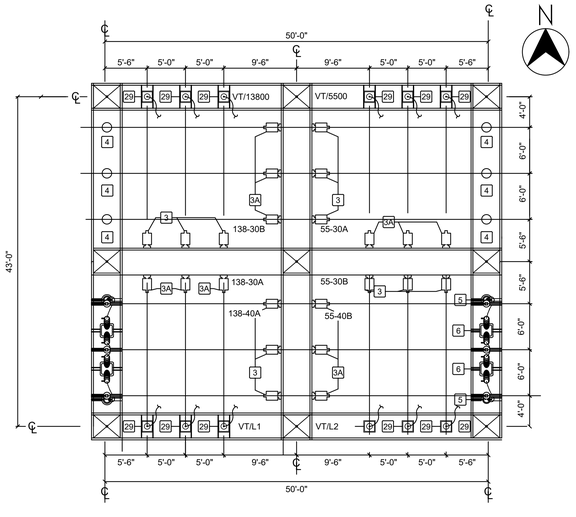

PLAN - LOWER STRUCTURE

SCALE: 1/8"=1'-0"

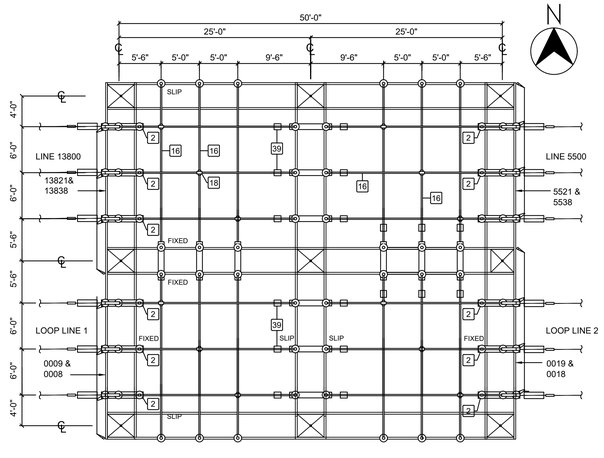

PLAN - UPPER STRUCTURE

SCALE: 1/8"=1'-0"

LEGEND

1	NOT USED
2	DISCONNECT SWITCH, VERTICAL BREAK HORN GAP, 46KV, 250KV BIL, 1200 AMP MOMENTARY, 3 POLES, GANG OPERATED COMPLETE WITH OPERATING MECHANISM JOSLYN RF-2, & S & C R-9, WITH GROUND SWITCH
3	SIDE BREAK DISCONNECT SWITCH VERTICAL MOUNTED GANG OPERATED, 46KV, 1200AMP WITH OPERATING MECHANISH JOSLYN RB-1 CLOCKWISE OPENING.
3A	SIDE BREAK DISCONNECT SWITCH VERTICAL MOUNTED GANG OPERATED, 46KV, 1200AMP WITH OPERATING MECHANISH JOSLYN RB-1 COUNTER CLOCKWISE OPENING
4	SURGE ARRESTERS, STATION TYPE, 39KV RMS, 31.5KV MCOV, COOPER POWER ULTRASIL MODEL #UHAA036029A184511
5	CURRENT TRANSFORMERS BY P.R.E.P.A.
6	POTENTIAL TRANSFORMERS BY P.R.E.P.A.
7	METER BY P.R.E.P.A.
8	ALUMINIUM STEEL STRUCTURE COMPLETE WITH LIGHTNING BAYONETS, AND DESIGNED FOR A TENSION OF 1000 LBS. PER WIRE ± 15 DEGREES IN THE HORIZONTAL PLANE FROM THE STRAIGHT PULL PLUS 170 MPH WIND
9	INSULATOR, SUSPENSION, 10 INC DIAMETER, ANSI 52-3 GRAY #70 OR POLYMER EQUIVALENT FOUR UNITS FOR EACH PHASE ONE UNIT FOR GROUNDING WIRE.
10	INSULATOR, POST TYPE, 46KV, NEMA TR 214, GRAY 70 OR SILICONE EQUIVALENT.
11	ANCHOR SHACKLE, 5/8 INCH PIN.
12	BALL CLEVIS, 5/8 INCH.
13	STRAIN CLAMP
14	INCOMING 38KV LINE.
15	STATIC WIRE, ALUMOWELD 3 NO. 6, AWG.
16	2" SCH. 40 AL
17	500 MCM AL, 9 STRAND
18	TEE, 2" IPS TUBING RUN TO 500 MCM AL
19	SEMI-FLEX COPPER CONNECTOR, TINNED.
20	CABLE, GROUND, BARE COPPER # 4/0 AWG.
21	CABLE, GROUND, BARE COPPER # 1/0 AWG.
22	GROUND ROD 3/4" X 10'-0" COPPERWELD.
23	GROUND CLAMP, TO SUPPORT GROUND WIRE ON STRUCTURE, SPACE EVERY 3'-0" TO 5'-0".
24	1/4" X 3'-0" X 4'-0" ALUMINUM PLATE PLATAFORM FOR SWITCH OPERATOR, SEE P.R.E.P.A. STD. 13 ABS-1.
25	CAST ALUMINUM BRACKET, SIMILAR TO COOPER LIGHTING BAA-GLAN-SA2A-730-U-5WQ-PR-0A/RA1014 LUMINAIRE, LED. 63W, 120 VOLTS, WITH PHOTOCELL.
26	SF6, 3000AMP, 48.3KV 250KV BIL CIRCUIT BREAKER (FURNISH BY OWNER AND INSTALL BY THE CONTRACTOR).
27	FENCE, CYCLONE, 8FT. HIGH WITH THREE STRANDS OF BARBED WIRE, GALVANIZED GAGE NO.6.
28	BAKED ENAMEL SIGN "DANGER-PELIGRO-ALTO VOLTAJE".
29	POTENTIAL TRANSFORMER FOR RELAYING
30	GROUND CLAMP, 1/0 STRANDED COPPER TO FENCE POST,
31	24 IN. COPPER BRAID, FLEXIBLE, TINNED WITH MECHANICAL PRESSURE CONNECTORS.
32	CLAMP, GROUND, BRAID TO GATE FRAME.
33	SWITCH MECHANISM OPERATOR HANDLE
34	CLAMP, GROUND, 1/0 STRANDED COPPER CABLE & BRAID TO GATE POST.
35	GROUND CABLE BRAZED JOINT, TYPE AS REQUIRED.
36	TRANSFORMER DIKE AND FOUNDATION
37	TUBE TO CABLE CONNECTOR.
38	NOT USED
39	TEE, 2" IPS AL RUN, 2" IPS AL TAP
40	4/0 AL CONDUCTOR
41	CORONA CAP, 2" STD. STRENGTH AL BUS
42	STRAIGHT BOLTED 4/0 AL CABLE TO 2 HOLE FLAT
43	STRAIGHT BOLTED 500 MCM AL CABLE TO 2 HOLE FLAT
44	BUS SUPPORT, 5" B.C. STA. POST TO 2" AL BUS
45	CABLE SUPPORT, 5" B.C. STA. POST TO 500 MCM CABLE
46	TEE, 2" IPS AL RUN, 4/0 AL TAP
48	COUPLER, STRAIGHT, 2" AL TUBE TO 500 MCM CABLE
49	POWER FUSES 46KV 250KV BIL, 31500 SYM. AMP INTERRUPTING CAPACITY, HOOK OPERATED S&C SMD-2C WITH 100EAMP FUSE UNIT
50	CONTROL ROOM

NOTES

1. THE ENTIRE INSTALLATION SHALL BE MADE ACCORDING TO THE APPLICABLE CONSTRUCTION STANDARDS OF PREPA/LUMA
2. ALL WORK ON EXISTING LINES SHALL BE DONE BY PREPA/LUMA AT OWNERS EXPENSE.
3. FOR ALL STANDARDS NUMBERS ON THESE DRAWINGS REFER TO PREPA/LUMA STANDARDS MANUALS ON STREET LIGHTING & TRANSMISSION LINES.
4. UP TO ONE MILE FROM THE SEA SHORE, ALL EQUIPMENT SHALL BE STAINLESS STEEL. (SITE LOCATION EXCEEDS ONE MILE)
5. APPROVAL BY PREPA/LUMA DOES NOT INCLUDE STRUCTURAL & FOUNDATION DETAILS.
6. CONTRACTOR SHALL NOTIFY LUMA PREVIOUS TO BEGINING ELECTRICAL WORK FOR PROPER APPROVAL, COORDINATION & INSPECTION.
7. CONTRACTOR SHALL LEAVE THE ELECTRICAL SYSTEM IN PERFECT WORKING CONDITION, & IS RESPONSIBLE FOR ANY DEFECTS FOUND WHEN SERVICE IS CONNECTED.
8. ALL CONSTRUCTION WORK SHALL BE DONE IN ACCORDANCE WITH THE PLANS, SPECIFICATION & CONSTRUCTION DRAWINGS. THE LAST EDITION OF THE NATIONAL ELECTRICAL CODE SHALL BE FOLLOWED EXCEPT WHERE LOCAL REGULATIONS ARE MORE STRINGENT, IN WHICH CASE, LOCAL REGULATIONS SHALL GOVERN.
9. GROUND SYSTEM SHALL HAVE A MAXIMUM RESISTANCE OF FIVE (5) OHMS. THE CONTRACTOR SHALL VERIFY THIS CONDITION IN THE FIELD.
10. THERE SHALL NOT BE WATER, NOR SEWAGE PIPE LINES UNDER THE FLOOR OF SUBSTATION.
11. ALL EQUIPMENT SHALL BE CONSTRUCTED ACCORDING TO ANSI, NEMA & PREPA/LUMA STANDARDS.
12. VENDOR SHALL PROVIDE ONE SPARE FUSE FOR EACH PRIMARY HOLDER.
13. OPEN BLADE OR FUSE OR PRIMARY SWITCH SHALL BE DEENERGIZED.
14. ARRESTER SHALL BE CONNECTED TO GROUND ROD AT THE BOTTOM OF THE STRUCTURE. THE GROUNDING ROD SHALL BE CONNECTED TO THE GROUNDING MAT.
15. ARRESTER CONNECTIONS TO GROUNDING ROD SHALL BE FREE OF SHARP BENDS & SHALL AVOID 90° BENDS ON ARRESTER CONNECTION.
16. INSTALL A GROUND ROD FOR THE CONNECTION OF THE TRANSFORMER GROUND TERMINAL. THE GROUND ROD SHALL BE CONNECTED TO THE GROUNDING MAT.
17. BEFORE ENERGIZING THE 38Kv SWITCHYARD THE FOLLOWING TESTS SHALL BE PERFORMED:
    - A - INSULATION AC (POWER FACTOR)
    - B - INSULATION DC (MEGGER)
    - C - TURN RATIO
    - D - BUSHINGS INSULATION
    - E - EXCITING CURRENT
    - F - OIL POWER FACTOR
    - G - OIL ACIDITY
    - H - GROUND RESISTANCE
    - I - DISCONNECT SWITCH CONTACT RESISTANCE

MINIMUM CLEARANCES (INCHES)*

LINE TO GROUND	℄	18
HORNGAP SWITCH TO	℄	72
BUS SUPPORTS, TO	℄	48
LINE TO GROUND	℄	21
OVERHEAD TO GRADE		120

* ALL CLEARANCES PER NEMA SG6

2026-691294-SRI-330056

DESIGNER'S CERTIFICATION

1. I certify that I am a licensed and registered engineer, surveyor, or architect (in compliance with Act 173 of 1988, as amended) and authorized by the project or land owner to submit these construction plans to LUMA Energy as operator and administrator of the Transmission and Distribution System of the Puerto Rico Electric Power Authority.
2. In compliance with Act No.135 of July 15, 1967, as amended known as the "Construction Plans or Projects Certification Act", I certify that I prepared the electric design for this project in accordance with the codes, Standards, rules, and regulations approved by LUMA, Puerto Rico Planning Board and Permits Management Office and the CIAPR Professional Practice Manual.

DESIGNER'S SIGNATURE

ENDORSEMENT

LUMA

Project Name: LRA- POWER GRID IMPROVEMENT

Project Number: -

Load: (kVA): 30MVA Revision: -

ENDORSED BY

1. LUMA endorses the electric design shown in these construction plans based on the certification presented by the designer in compliance with Act 135 of July 15, 1967, as amended.
2. LUMA does not assume responsibility over the certified design. LUMA's endorsement does not relieve the designer from the professional responsibility assumed with the certification of these project's plans. This endorsement relieves neither the builder nor private inspector from compliance with standing dispositions from: National Electric Code, National Electric Safety Code; constructions standards, norms, and regulations from LUMA and other government agencies as well as federal and state laws ruling by the time construction begins.
3. This endorsement is valid for one (1) year. If electrical works have begun during this year, with prior notification to LUMA, the endorsement will still be valid until work's completion. In case there is no certified electrical work during this period, this endorsement will lose its validity. This endorsement is not to constitute an easement or to complete the Assignment, Transfer and Guarantee process of the equipment. For this, it is necessary to comply with all the provisions of the Easements Regulation for the Puerto Rico Electric Power Authority (7282 of 2007).

CMA ARCHITECTS & ENGINEERS LLC
1509 Ave FD Roosevelt Ste 200
Guaynabo, PR 00968-2706
Tel: 787-792-1509
Fax: 787-782-0687
E-mail: cma@cmapr.com
www.cmapr.com
© 2026 CMA A&E LLC

ROOSEVELT ROADS PUERTO RICO

ELECTRICAL POWER GRID

FEMA PA DR-4339 PROJECT 95275

LOCAL REDEVELOPMENT AUTHORITY FOR ROOSEVELT ROADS

CEIBA PUERTO RICO

DATE		REVISIONS	BY
10/23/2026	4	ADDENDUM NO. 3 (IFP)	CLM
10/12/2026	3	90% CONSTRUCTION DOCUMENTS	CLM
08/31/2026	2	75% PROGRESS PRINT (IFR)	CLM
08/17/2026	1	ISSUED FOR EQUIPMENT PROCUREMENT	CLM

Job No.	22212
SCALE	1/8"=1'-0"
DATE	07/30/2026
DRAWN BY	CAD
CHECKED BY	CLM

38KV SWITCHYARD LAYOUT PLAN (TITLE)

E3-04

DATE: Wednesday, October 28, 2026 3:39 PM USER: Nerdys Matos Perez FILE: C:\DM WORKSPACE\22212\CHECKOUT\E3-04.DWG