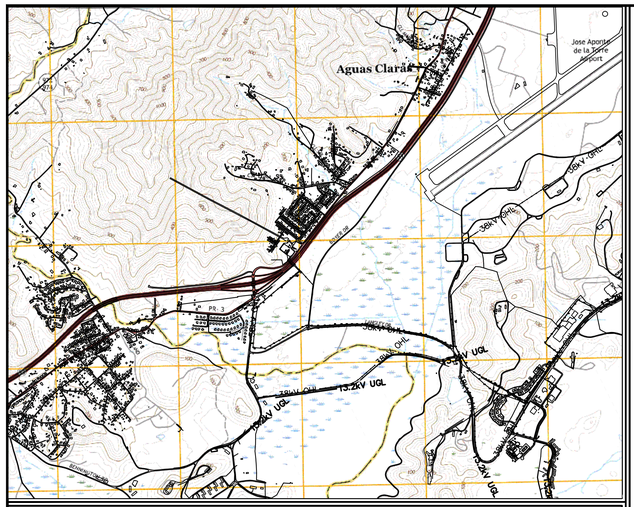

LOCATION PLAN SCALE: 1:20,000

ELECTRICAL POWER GRID

FEMA PA DR-4339 PROJECT 95275

LOCAL REDEVELOPMENT AUTHORITY FOR ROOSEVELT ROADS

ISSUED FOR PROCURENMENT

CEIBA PUERTO RICO

INDEX OF DRAWINGS

T1-01-A TITLE SHEET AND INDEX OF DRAWINGS

ELECTRICAL DRAWINGS

E1-01 OVERALL DISTRIBUTION ONE LINE DIAGRAM

E1-02 38KV SWITCHYARD ONE LINE DIAGRAM

E1-03 MAIN SUBSTATIONS ONE LINE DIAGRAM

E1-04 DISTRIBUTION SWITCHGEAR ONE LINE DIAGRAM

E3-01 TYPICAL 38KV SUBSTATION LAYOUT PLAN

E3-02 TYPICAL 38KV SUBSTATION ELEVATION PLAN

E3-03 38KV SWITCHYARD LAYOUT PLAN

E3-04 38KV SWITCHYARD ELEVATION PLAN

E4-00 GENERAL NOTES AND LOCATION PLAN

E4-01 OUTLET SCHEDULES & LEGEND

E6-01 SWITCHGEAR ROOM ELECTRICAL PLAN

GENERAL PROCUREMENT NOTES – INSTRUCTIONS TO BIDDERS

1. PROCUREMENT SCOPE: THIS PROCUREMENT PACKAGE IS LIMITED TO THE FURNISHING OF THE SPECIFIED LIQUID-FILLED POWER TRANSFORMERS, 13.2 KV METAL-CLAD SWITCHGEAR, AND 38 KV SF6 CIRCUIT BREAKERS, COMPLETE WITH ALL FACTORY-INSTALLED COMPONENTS, ACCESSORIES, CONTROLS, PROTECTIVE DEVICES, DOCUMENTATION, FACTORY TESTING, PACKAGING, AND DELIVERY REQUIRED BY THE CONTRACT DOCUMENTS.
2. DRAWINGS MAY SHOW FOUNDATIONS, EQUIPMENT PADS, STRUCTURES, BUILDINGS, ARCHITECTURAL ELEMENTS, STRUCTURAL SUPPORTS, FEEDERS, RACEWAYS, GROUNDING SYSTEMS, CABLE TERMINATIONS, AND OTHER INSTALLATION-RELATED WORK. SUCH INFORMATION IS PROVIDED ONLY TO ESTABLISH EQUIPMENT INTERFACES, DIMENSIONS, CLEARANCES, CONNECTION REQUIREMENTS, AND COORDINATION CRITERIA AND SHALL NOT BE INCLUDED IN THE BIDDER'S PRICE UNLESS SPECIFICALLY IDENTIFIED IN THE BID FORM OR PROCUREMENT SPECIFICATIONS.
3. THE BIDDER'S SCOPE DOES NOT INCLUDE DEMOLITION, SITE PREPARATION, CIVIL WORK, CONCRETE FOUNDATIONS, STRUCTURAL STEEL, ARCHITECTURAL WORK, EQUIPMENT INSTALLATION, ANCHORAGE INSTALLATION, FIELD CONDUITS, POWER OR CONTROL FEEDERS, CABLE PULLING, FIELD TERMINATIONS, GROUNDING CONDUCTORS, OR FINAL EQUIPMENT INTERCONNECTIONS.
4. THE BIDDER SHALL REVIEW ALL DRAWINGS AND SPECIFICATIONS TO VERIFY EQUIPMENT RATINGS, ARRANGEMENT, DIMENSIONS, CABLE-ENTRY LOCATIONS, TERMINAL REQUIREMENTS, ACCESS CLEARANCES, SHIPPING RESTRICTIONS, FOUNDATION INTERFACES, CONTROL REQUIREMENTS, AND COORDINATION WITH ADJACENT EQUIPMENT.
5. EQUIPMENT SHALL BE FURNISHED AS COMPLETE, FACTORY-ASSEMBLED, FACTORY-WIRED, AND FACTORY-TESTED PACKAGES. ALL COMPONENTS, ACCESSORIES, AUXILIARY DEVICES, TERMINAL BLOCKS, HARDWARE, INTERNAL WIRING, AND SPECIAL TOOLS REQUIRED FOR THE SPECIFIED EQUIPMENT TO PERFORM ITS INTENDED FUNCTION SHALL BE INCLUDED.
6. THE BIDDER SHALL FURNISH COMPLETE APPROVAL, CERTIFIED, AND FINAL AS-BUILT DRAWINGS, INCLUDING GENERAL ARRANGEMENTS, FOUNDATION AND ANCHOR-BOLT INFORMATION, WEIGHTS, CENTERS OF GRAVITY, EQUIPMENT REACTIONS, WIRING DIAGRAMS, CONTROL SCHEMATICS, TERMINAL SCHEDULES, BILLS OF MATERIALS, NAMEPLATE INFORMATION, AND CERTIFIED FACTORY TEST REPORTS.
7. FINAL FIELD DIMENSIONS, FOUNDATIONS, STRUCTURAL SUPPORTS, CONDUIT LOCATIONS, CABLE LENGTHS, FEEDER SIZES, GROUNDING CONNECTIONS, AND INSTALLATION METHODS WILL BE COORDINATED AND PROVIDED BY OTHERS. THE EQUIPMENT SUPPLIER SHALL CLEARLY IDENTIFY ALL REQUIRED INSTALLATION INTERFACES AND DIMENSIONAL TOLERANCES IN THE SUBMITTAL.
8. ANY DEVIATION, EXCEPTION, SUBSTITUTION, OR OMISSION FROM THE PROCUREMENT SPECIFICATIONS OR DRAWINGS SHALL BE CLEARLY IDENTIFIED IN THE BIDDER'S PROPOSAL. UNIDENTIFIED DEVIATIONS SHALL NOT BE CONSIDERED ACCEPTED.
9. EQUIPMENT SHALL NOT BE RELEASED FOR MANUFACTURE UNTIL THE REQUIRED APPROVAL DRAWINGS HAVE BEEN REVIEWED. REVIEW OF SUBMITTALS DOES NOT RELIEVE THE SUPPLIER FROM RESPONSIBILITY FOR COMPLIANCE WITH THE CONTRACT DOCUMENTS, EQUIPMENT RATINGS, DIMENSIONS, CLEARANCES, COORDINATION, OR COMPLETENESS.
10. WHERE A CONFLICT EXISTS BETWEEN INSTALLATION INFORMATION SHOWN ON THE DRAWINGS AND THE PROCUREMENT SPECIFICATIONS, THE BIDDER SHALL REQUEST CLARIFICATION BEFORE SUBMITTING THE PROPOSAL. THE BIDDER SHALL NOT INCLUDE INSTALLATION WORK BASED SOLELY ON INFORMATION SHOWN FOR REFERENCE OR COORDINATION PURPOSES.

Yo, Christian José López Méndez, Lic. #24953, certifico que soy el profesional que diseñó estos planos y las especificaciones complementarias. También, certifico que entiendo que dichos planos y especificaciones cumplen con las disposiciones aplicables del Reglamento Conjunto y las disposiciones aplicables de los Reglamentos y Códigos de Construcción Vigentes de las Agencias, Juntas Reglamentadoras o Corporaciones Públicas con jurisdicción. Certifico, además, que en la preparación de estos planos y especificaciones se ha cumplido cabalmente con lo dispuesto en la Ley Núm. 14 de 8 de enero de 2004, según enmendada, conocida como la "Ley para la Inversión por la Industria Puertorriqueña" y con la Ley Núm. 319 de 15 de mayo de 1938, según enmendada. Reconozco que cualquier declaración falsa o falsificación de los hechos que se haya producido por desconocimiento o por negligencia ya sea por mí, mis gentes o empleados, o por otras personas con mi conocimiento, me hacen responsable de cualquier acción judicial y disciplinaria por la OGPe.

Christian José López Méndez Ingeniero Licenciado Lic. 24953/PE Puerto Rico

CMA ARCHITECTS & ENGINEERS LLC
1509 Ave FD Roosevelt Ste 200
Guaynabo, PR 00968-2706
Tel: 787-792-1509
Fax: 787-782-0687
E-mail: cma@cmapr.com
www.cmapr.com

© 2026 CMA A&E LLC

ROOSEVELT ROADS PUERTO RICO

ELECTRICAL POWER GRID
FEMA PA DR-4339 PROJECT 95275
LOCAL REDEVELOPMENT AUTHORITY FOR ROOSEVELT ROADS
CEIBA PUERTO RICO

DATE	REVISIONS	BY
08/17/2026	1 ISSUED FOR EQUIPMENT PROCUREMENT	CLM

Job No.	22212
SCALE	NONE
DATE	01/21/2026
DRAWN BY	CAD
CHECKED BY	CLM

TITLE SHEET AND INDEX OF DRAWINGS

T1-01-A

DATE: Monday, August 17, 2026 1:12 PM USER: Nerdys Matos Perez FILE: C:\DM WORKSPACE\22212\CHECKOUT\T1-01-A.DWG

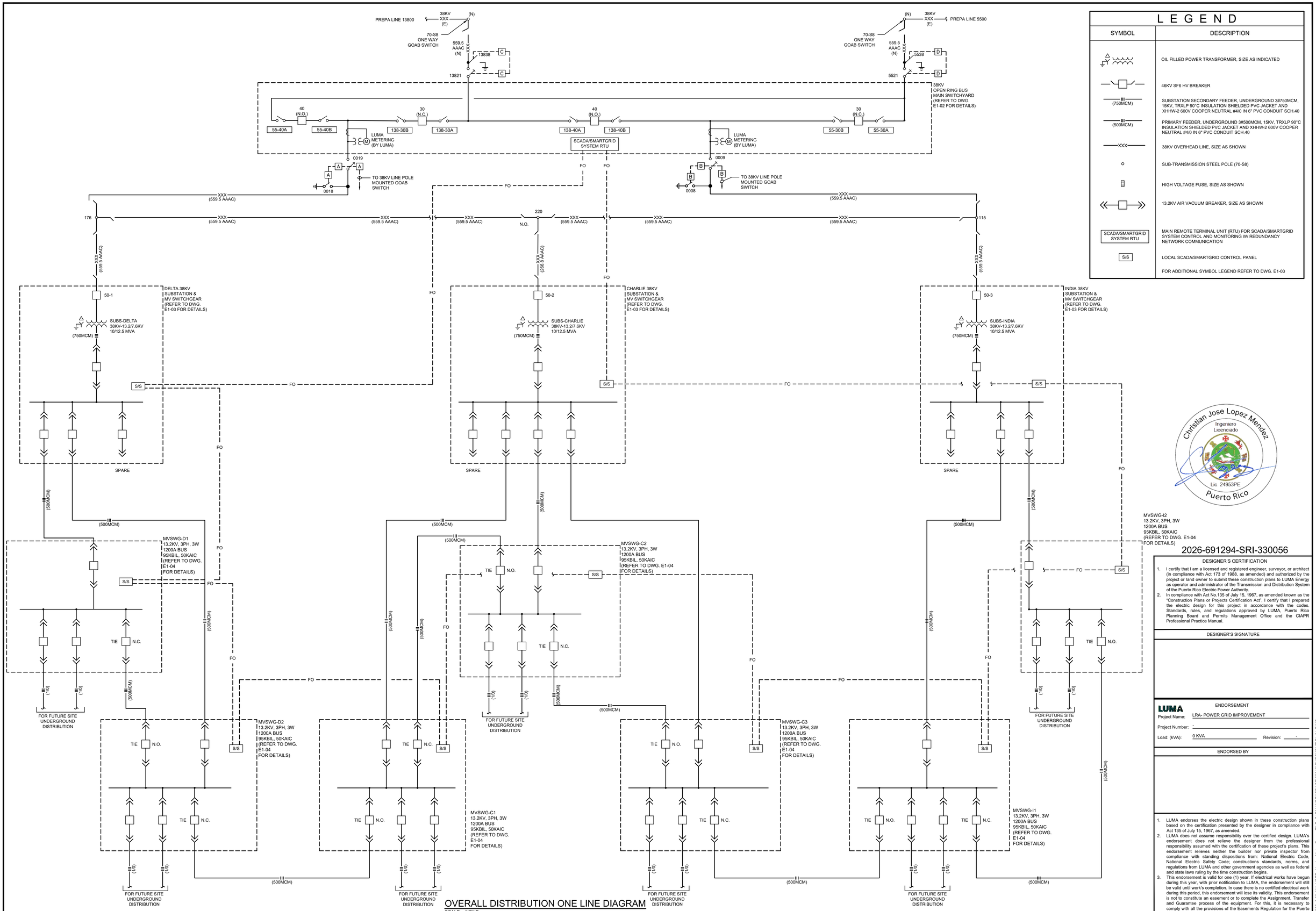

OVERALL DISTRIBUTION ONE LINE DIAGRAM

SCALE: NONE

L E G E N D

SYMBOL	DESCRIPTION
	OIL FILLED POWER TRANSFORMER, SIZE AS INDICATED
	46KV SF6 HV BREAKER
(750MCM)	SUBSTATION SECONDARY FEEDER, UNDERGROUND 3#750MCM, 15KV, TRXLP 90°C INSULATION SHIELDED PVC JACKET AND XHHW-2 600V COOPER NEUTRAL #4/0 IN 6" PVC CONDUIT SCH.40
(500MCM)	PRIMARY FEEDER, UNDERGROUND 3#500MCM, 15KV, TRXLP 90°C INSULATION SHIELDED PVC JACKET AND XHHW-2 600V COOPER NEUTRAL #4/0 IN 6" PVC CONDUIT SCH.40
XXX	38KV OVERHEAD LINE, SIZE AS SHOWN
	SUB-TRANSMISSION STEEL POLE (70-S8)
	HIGH VOLTAGE FUSE, SIZE AS SHOWN
	13.2KV AIR VACUUM BREAKER, SIZE AS SHOWN
SCADA/SMARTGRID SYSTEM RTU	MAIN REMOTE TERMINAL UNIT (RTU) FOR SCADA/SMARTGRID SYSTEM CONTROL AND MONITORING W/ REDUNDANCY NETWORK COMMUNICATION
S/S	LOCAL SCADA/SMARTGRID CONTROL PANEL
	FOR ADDITIONAL SYMBOL LEGEND REFER TO DWG. E1-03

Christian Jose Lopez Mendez
Ingeniero
Licenciado
Lic. 24953PE
Puerto Rico

2026-691294-SRI-330056

DESIGNER'S CERTIFICATION

1. I certify that I am a licensed and registered engineer, surveyor, or architect (in compliance with Act 173 of 1988, as amended) and authorized by the project or land owner to submit these construction plans to LUMA Energy as operator and administrator of the Transmission and Distribution System of the Puerto Rico Electric Power Authority.
2. In compliance with Act No.135 of July 15, 1967, as amended known as the "Construction Plans or Projects Certification Act", I certify that I prepared the electric design for this project in accordance with the codes, Standards, rules, and regulations approved by LUMA, Puerto Rico Planning Board and Permits Management Office and the CIAPR Professional Practice Manual.

DESIGNER'S SIGNATURE

ENDORSEMENT

LUMA

Project Name: LRA- POWER GRID IMPROVEMENT

Project Number: -

Load: (kVA): 0 KVA Revision: -

ENDORSED BY

1. LUMA endorses the electric design shown in these construction plans based on the certification presented by the designer in compliance with Act 135 of July 15, 1967, as amended.
2. LUMA does not assume responsibility over the certified design. LUMA's endorsement does not relieve the designer from the professional responsibility assumed with the certification of these project's plans. This endorsement relieves neither the builder nor private inspector from compliance with standing dispositions from: National Electric Code, National Electric Safety Code; constructions standards, norms, and regulations from LUMA and other government agencies as well as federal and state laws ruling by the time construction begins.
3. This endorsement is valid for one (1) year. If electrical works have begun during this year, with prior notification to LUMA, the endorsement will still be valid until work's completion. In case there is no certified electrical work during this period, this endorsement will lose its validity. This endorsement is not to constitute an easement or to complete the Assignment, Transfer and Guarantee process of the equipment. For this, it is necessary to comply with all the provisions of the Easements Regulation for the Puerto Rico Electric Power Authority (7282 of 2007).

CMA ARCHITECTS & ENGINEERS LLC
1509 Ave FD Roosevelt Ste 200
Guaynabo, PR 00968-2706
Tel: 787-792-1509
Fax: 787-782-0687
E-mail: cma@cmapr.com
www.cmapr.com

© 2026 CMA A&E LLC

ROOSEVELT ROADS PUERTO RICO

ELECTRICAL POWER GRID

FEMA PA DR-4339 PROJECT 95275

LOCAL REDEVELOPMENT AUTHORITY FOR ROOSEVELT ROADS

CEIBA PUERTO RICO

DATE	REVISIONS	BY
08/17/2026	3 ISSUED FOR EQUIPMENT PROCUREMENT	CLM
02/26/2026	2 60% PRELIMINARY DESIGN (ELEC)	CLM
01/30/2026	1 35% CONCEPTUAL DESIGN	CLM

Job No.	22212
SCALE	NONE
DATE	07/20/2023
DRAWN BY	CAD
CHECKED BY	CLM

OVERALL DISTRIBUTION ONE LINE DIAGRAM (TITLE)

E1-01

DATE: Tuesday, August 18, 2026 8:33 AM USER: Nerdys Matos Perez FILE: C:\DM WORKSPACE\22212\CHECK\OUTIE1-01.DWG

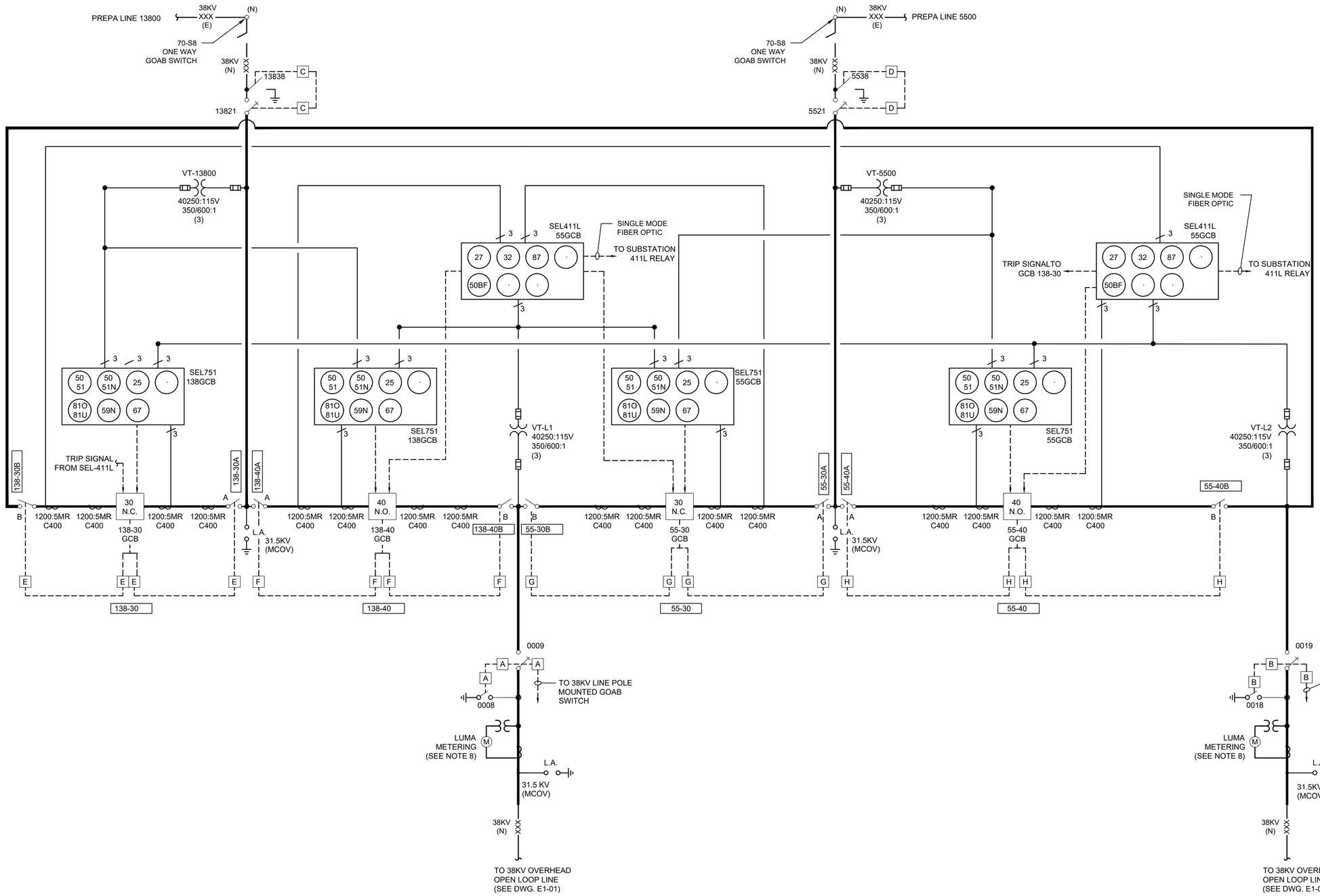

38KV SWITCHYARD ONE LINE DIAGRAM

SCALE: NONE

NOTES

1. SEE DRAWING E1-03 FOR ONE LINE DIAGRAM LEGEND.
2. ALL PROTECTION RELAYS SHALL INCLUDED TEST SWITCHES FOR CURRENT, VOLTAGES AND COMMAND INPUTS.
3. 38KV SF6 BREAKER MANUFACTURER SHALL PROVIDE AS PART OF THE EQUIPMENT SUBMITTAL ALL THE AC AND DC SCHEMATICS WIRING DIAGRAMS ASSOCIATED TO THE PROTECTION SCHEME CONTROL AND AC UTILITIES. THESE DRAWINGS SHALL BE SUBMITTED FOR APPROVAL.
4. ALL RELAYS SHALL HAVE COMMUNICATION AND CONTROL CAPABILITY TO CONNECT TO FUTURE MICROGRID SYSTEM.
5. ALL RELAYS WITH SYNCHRONIZING (DEVICE 25) SHALL HAVE SYNC CHECK PROTECTION.
6. MICROGRID CONTROL AND OPERATION SCHEME AND INTEGRATION, INCLUDING WIRING DETAILS, BY OTHERS.
7. REFER TO REALY MANUFACTURER SHOP DRAWING FOR EXACT RELAY POWER (DC) CONNECTION.
8. METER, CT AND VT SPECIFICATION BY LUMA .

Christian Jose Lopez Mendez
Ingeniero Licenciado
Lic. 24953PE
Puerto Rico

2026-691294-SRI-330056

DESIGNER'S CERTIFICATION

1. I certify that I am a licensed and registered engineer, surveyor, or architect (in compliance with Act 173 of 1988, as amended) and authorized by the project or land owner to submit these construction plans to LUMA Energy as operator and administrator of the Transmission and Distribution System of the Puerto Rico Electric Power Authority.
2. In compliance with Act No.135 of July 15, 1967, as amended known as the "Construction Plans or Projects Certification Act", I certify that I prepared the electric design for this project in accordance with the codes. Standards, rules, and regulations approved by LUMA, Puerto Rico Planning Board and Permits Management Office and the CIAPR Professional Practice Manual.

DESIGNER'S SIGNATURE

LUMA

ENDORSEMENT

Project Name: LRA- POWER GRID IMPROVEMENT

Project Number: -

Load: (kVA): 0 KVA Revision: -

ENDORSED BY

1. LUMA endorses the electric design shown in these construction plans based on the certification presented by the designer in compliance with Act 135 of July 15, 1967, as amended.
2. LUMA does not assume responsibility over the certified design. LUMA's endorsement does not relieve the designer from the professional responsibility assumed with the certification of these project's plans. This endorsement relieves neither the builder nor private inspector from compliance with standing dispositions from: National Electric Code, National Electric Safety Code; constructions standards, norms, and regulations from LUMA and other government agencies as well as federal and state laws ruling by the time construction begins.
3. This endorsement is valid for one (1) year. If electrical works have begun during this year, with prior notification to LUMA, the endorsement will still be valid until work's completion. In case there is no certified electrical work during this period, this endorsement will lose its validity. This endorsement is not to constitute an easement or to complete the Assignment, Transfer and Guarantee process of the equipment. For this, it is necessary to comply with all the provisions of the Easements Regulation for the Puerto Rico Electric Power Authority (7282 of 2007).

CMA ARCHITECTS & ENGINEERS LLC
1509 Ave FD Roosevelt Ste 200
Guaynabo, PR 00968-2706
Tel: 787-792-1509
Fax: 787-782-0687
E-mail: cma@cmapr.com
www.cmapr.com
© 2026 CMA A&E LLC

ROOSEVELT ROADS PUERTO RICO

ELECTRICAL POWER GRID

FEMA PA DR-4339 PROJECT 95275
LOCAL REDEVELOPMENT AUTHORITY FOR ROOSEVELT ROADS
CEIBA PUERTO RICO

DATE	REVISIONS	BY
08/17/2026	1 ISSUED FOR EQUIPMENT PROCUREMENT	CLM

Job No.	22212
SCALE	NONE
DATE	07/29/2026
DRAWN BY	CAD
CHECKED BY	CLM

38KV SWITCHYARD ONE LINE DIAGRAM

TITLE

E1-02

DATE: Monday, August 17, 2026 1:11 PM USER: Nerdys Matos Perez FILE: C:\DM WORKSPACE\22212\CHECKOUT\E1-02.DWG

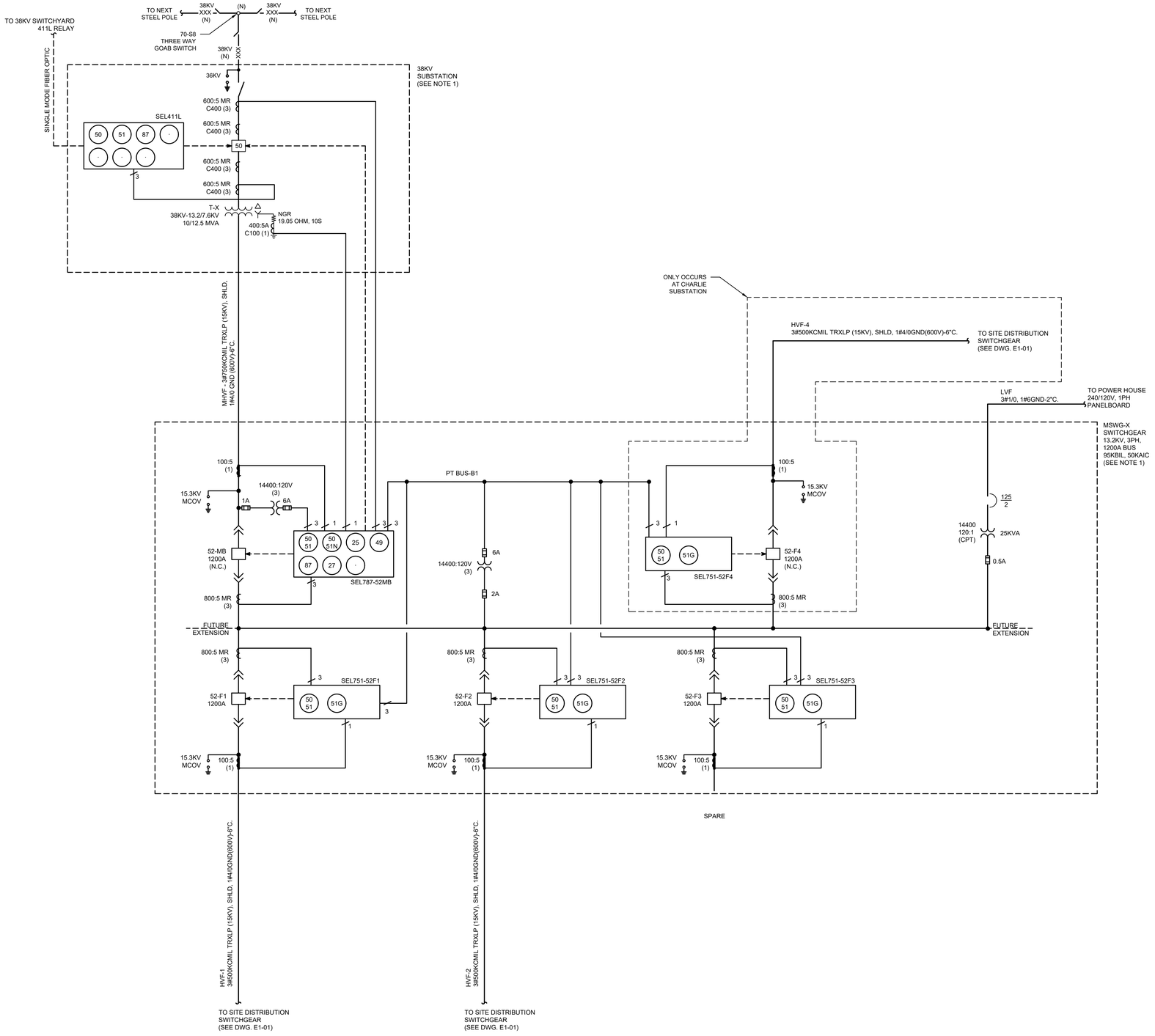

MAIN SUBSTATIONS ONE LINE DIAGRAM

SCALE: NTS

LEGEND

SYMBOL	DESCRIPTION
	HIGH VOLTAGE SF6 GAS INSULATED, 3000A, 48.3KV, 250KBIL, 40KAIC CIRCUIT BREAKER.
	MEDIUM VOLTAGE 13.2KV, 95KBIL, 50KAIC VACUUM CIRCUIT BREAKER (SIZE AS SHOWN ON DRAWING).
	TORDIDAL CURRENT TRANSFORMER (SIZE AS SHOWN ON DRAWINGS)
	TORDIDAL ZERO CURRENT TRANSFORMER (SIZE AS SHOWN ON DRAWINGS)
	VOLTAGE TRANSFORMER (SIZE AS SHOWN ON DRAWING)
	AIR NO LOAD BREAKER SWITCH GROUP OPERATED
	AIR LOAD BREAK SWITCH (GROUP OPERATED)
89 - 1 - 2	DEVICE NUMBER ASSOCIATED CIRCUIT BREAKER NO. DESIGNATION NO. (LINE SWITCH)
	CLASS MCOV LIGHTING ARRESTER (SIZE AND VOLTAGE TYPE AS SHOWN)
	LOW VOLTAGE CIRCUIT BREAKER
	OILED FILLED TRANSFORMER (SIZE AS SHOWN)
K	KIRK KEY INTERLOCK (COORDINATION AS SHOWN)
	GROUNDING RESISTANCE (SIZE TO BE DETERMINED)
50 51	OVERCURRENT AND TIME-OVERCURRENT PROTECTION RELAY FUNCTION
50 51N	NUETRAL OVERCURRENT AND TIME-OVERCURRENT PROTECTION RELAY FUNCTION
51G	GROUND TIME-OVERCURRENT PROTECTION RELAY FUNCTION
25	SYNCHRONISM CHECK RELAY FUNCTION
27	DEFINITE-TIME UNDERVOLTAGE FUNCTION
59	OVER-VOLTAGE PROTECTION RELAY FUNCTION
59N	NEUTRAL VOLTAGE DISPLACEMENT RELAY FUNCTION
27	UNDER-VOLTAGE PROTECTION RELAY FUNCTION
81O	OVER FREQUENCY PROTECTION RELAY FUNCTION
81U	UNDER FREQUENCY PROTECTION RELAY FUNCTION
32	DIRECTIONAL POWER PROTECTION RELAY FUNCTION
67	DIRECTIONAL OVERCURRENT RELAY FUNCTION
50BF	BREAKER FAILURE RELAY FUNCTION
87	CURRENT DIFFERENTIAL RELAY FUNCTION

NOTES

1. TYPICAL ONE LINE DIAGRAM FOR CHARLIE, DELTA AND INDIA SUBSTATIONS.
2. ALL PROTECTION RELAYS SHALL INCLUDED TEST SWITCHES FOR CURRENT, VOLTAGES AND COMMAND INPUTS.
3. 46KV SF6 GAS INSULATED BREAKER AND 13.2KV VACUUM BREAKER SWITCHGEAR MANUFACTURER SHALL PROVIDE AS PART OF THE EQUIPMENT SUBMITTAL ALL THE AC AND DC SCHEMATICS WIRING DIAGRAMS ASSOCIATED TO THE PROTECTION SCHEME CONTROL AND AC UTILITIES. THESE DRAWINGS SHALL BE SUBMITTED FOR APPROVAL.
4. ALL RELAYS SHALL HAVE COMMUNICATION AND CONTROL CAPABILITY TO CONNECT TO FUTURE MICROGRID SYSTEM.
5. ALL RELAYS WITH SYNCHRONIZING (DEVICE 25) SHALL HAVE SYNC CHECK PROTECTION.
6. MICROGRID CONTROL AND OPERATION SCHEME AND INTEGRATION, INCLUDING WIRING DETAILS, BY OTHERS.
7. REFER TO MV SWITCHGEAR MANUFACTURER SHOP DRAWING FOR EXACT RELAY POWER (DC) CONNECTION.

Christian Jose Lopez Mendez
Ingeniero Licenciado
Lic. 24953PE
Puerto Rico

2026-691294-SRI-330056

DESIGNER'S CERTIFICATION

1. I certify that I am a licensed and registered engineer, surveyor, or architect (in compliance with Act 173 of 1988, as amended) and authorized by the project or land owner to submit these construction plans to LUMA Energy as operator and administrator of the Transmission and Distribution System of the Puerto Rico Electric Power Authority.
2. In compliance with Act No.135 of July 15, 1967, as amended known as the "Construction Plans or Projects Certification Act", I certify that I prepared the electric design for this project in accordance with the codes, Standards, rules, and regulations approved by LUMA, Puerto Rico Planning Board and Permits Management Office and the CIAPR Professional Practice Manual.

DESIGNER'S SIGNATURE

LUMA

ENDORSEMENT

Project Name: LRA- POWER GRID IMPROVEMENT

Project Number: -

Load: (kVA): 0 KVA Revision: -

ENDORSED BY

1. LUMA endorses the electric design shown in these construction plans based on the certification presented by the designer in compliance with Act 135 of July 15, 1967, as amended.
2. LUMA does not assume responsibility over the certified design. LUMA's endorsement does not relieve the designer from the professional responsibility assumed with the certification of these project's plans. This endorsement relieves neither the builder nor private inspector from compliance with standing dispositions from: National Electric Code, National Electric Safety Code; constructions standards, norms, and regulations from LUMA and other government agencies as well as federal and state laws ruling by the time construction begins.
3. This endorsement is valid for one (1) year. If electrical works have begun during this year, with prior notification to LUMA, the endorsement will still be valid until work's completion. In case there is no certified electrical work during this period, this endorsement will lose its validity. This endorsement is not to constitute an easement or to complete the Assignment, Transfer and Guarantee process of the equipment. For this, it is necessary to comply with all the provisions of the Easements Regulation for the Puerto Rico Electric Power Authority (7282 of 2007).

CMA ARCHITECTS & ENGINEERS LLC
1509 Ave FD Roosevelt Ste 200
Guaynabo, PR 00968-2704
Tel: 787-792-1509
Fax: 787-782-0687
E-mail: cma@cmapr.com
www.cmapr.com
© 2026 CMA A&E LLC

ROOSEVELT ROADS PUERTO RICO

ELECTRICAL POWER GRID

FEMA PA DR-4339 PROJECT 95275
LOCAL REDEVELOPMENT AUTHORITY FOR ROOSEVELT ROADS
CEIBA PUERTO RICO

DATE	REVISIONS	BY
08/17/2026	1 ISSUED FOR EQUIPMENT PROCUREMENT	CLM

Job No.	22212
SCALE	NONE
DATE	07/29/2026
DRAWN BY	CAD
CHECKED BY	CLM

MAIN SUBSTATIONS ONE LINE DIAGRAM (TITLE)

E1-03

DATE: Monday, August 17, 2026 3:07 PM USER: Nerdys Matos Perez FILE: C:\DM WORKSPACE\22212\CHECKOUT\E1-03.DWG

NOTES

1. TYPICAL ONE LINE DIAGRAM FOR DISTRIBUTION SWITCHGEARS: MV-SWG-D1, D2, C1, C2, C3, I1 & I2. REFER TO DRAWING E1-01 FOR MEDIUM VOLTAGE (MV) BREAKERS LAYOUT FOR EACH SWITCHGEAR AND NORMALLY OPEN OR CLOSED TIE BREAKER CONFIGUTATION.
2. REFER TO DRAWING E1-02 FOR ONE LINE DIAGRAM LEGEND.
3. ALL PROTECTION RELAYS SHALL INCLUDED TEST SWITCHES FOR CURRENT, VOLTAGES AND COMMAND INPUTS.
4. 13.2KV VACUUM BREAKER SWITCHGEAR MANUFACTURER SHALL PROVIDE AS PART OF THE EQUIPMENT SUBMITTAL ALL THE AC AND DC SCHEMATICS WIRING DIAGRAMS ASSOCIATED TO THE PROTECTION SCHEME CONTROL AND AC UTILITIES. THESE DRAWINGS SHALL BE SUBMITTED FOR APPROVAL.
5. ALL RELAYS SHALL HAVE COMMUNICATION AND CONTROL CAPABILITY TO CONNECT TO FUTURE MICROGRID SYSTEM.
6. ALL RELAYS WITH SYNCHRONIZING (DEVICE 25) SHALL HAVE SYNC CHECK PROTECTION.
7. MICROGRID CONTROL AND OPERATION SCHEME AND INTEGRATION, INCLUDING WIRING DETAILS BY OTHERS.
8. REFER TO MV SWITCHGEAR MANUFACTURER SHOP DRAWING FOR EXACT RELAY POWER (DC) CONNECTION.

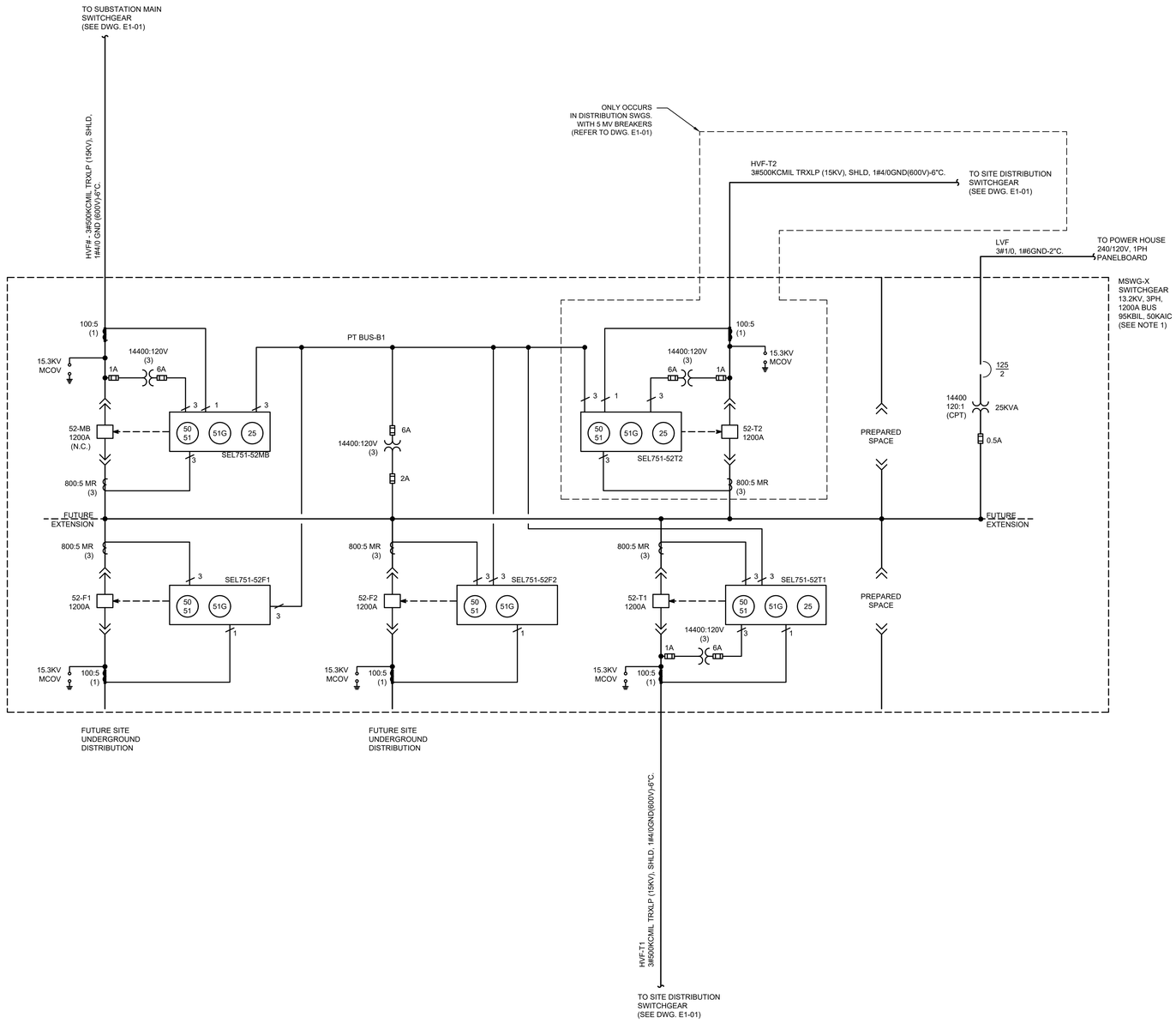

DISTRIBUTION SWITCHGEARS ONE LINE DIAGRAM

SCALE: NTS



2026-691294-SRI-330056

DESIGNER'S CERTIFICATION

1. I certify that I am a licensed and registered engineer, surveyor, or architect (in compliance with Act 173 of 1988, as amended) and authorized by the project or land owner to submit these construction plans to LUMA Energy as operator and administrator of the Transmission and Distribution System of the Puerto Rico Electric Power Authority.
2. In compliance with Act No.135 of July 15, 1967, as amended known as the "Construction Plans or Projects Certification Act", I certify that I prepared the electric design for this project in accordance with the codes. Standards, rules, and regulations approved by LUMA, Puerto Rico Planning Board and Permits Management Office and the CIAPR Professional Practice Manual.

DESIGNER'S SIGNATURE

ENDORSEMENT

LUMA

Project Name: LRA- POWER GRID IMPROVEMENT

Project Number: -

Load: (KVA): 0 KVA Revision: -

ENDORSED BY

1. LUMA endorses the electric design shown in these construction plans based on the certification presented by the designer in compliance with Act 135 of July 15, 1967, as amended.
2. LUMA does not assume responsibility over the certified design. LUMA's endorsement does not relieve the designer from the professional responsibility assumed with the certification of these project's plans. This endorsement relieves neither the builder nor private inspector from compliance with standing dispositions from: National Electric Code, National Electric Safety Code; constructions standards, norms, and regulations from LUMA and other government agencies as well as federal and state laws ruling by the time construction begins.
3. This endorsement is valid for one (1) year. If electrical works have begun during this year, with prior notification to LUMA, the endorsement will still be valid until work's completion. In case there is no certified electrical work during this period, this endorsement will lose its validity. This endorsement is not to constitute an easement or to complete the Assignment, Transfer and Guarantee process of the equipment. For this, it is necessary to comply with all the provisions of the Easements Regulation for the Puerto Rico Electric Power Authority (7282 of 2007).

CMA ARCHITECTS & ENGINEERS LLC
1509 Ave FD Roosevelt Ste 200
Guaynabo, PR 00968-2706
Tel: 787-792-1509
Fax: 787-782-0687
E-mail: cma@cmapr.com
www.cmapr.com
© 2026 CMA A&E LLC

ROOSEVELT ROADS PUERTO RICO

ELECTRICAL POWER GRID

FEMA PA DR-4339 PROJECT 95275

LOCAL REDEVELOPMENT AUTHORITY FOR ROOSEVELT ROADS

CEIBA PUERTO RICO

DATE	REVISIONS	BY
08/17/2026	1 ISSUED FOR EQUIPMENT PROCUREMENT	CLM

Job No.	22212
SCALE	NONE
DATE	07/29/2026
DRAWN BY	CAD
CHECKED BY	CLM

DISTRIBUTION SWITCHGEAR ONE LINE DIAGRAM

TITLE

E1-04

DATE: Monday, August 17, 2026 3:08 PM USER: Nerdys Matos Perez FILE: C:\DM WORKSPACE\22212\CHECKOUT\E1-04.DWG

LEGEND

1. NEW OIL FILLED 3PH, 60HZ, ONAN, TRANSFORMER WITH A CAPACITY OF 10000 /12500 KVA, 38KV DELTA (PRIMARY), 13.2/7.6 KV WYE (SECONDARY), 46 KV/ 250 KBIL CLASS (PRIMARY) AND 15 KV / 95KBIL (SECONDARY) WITH 2-2.5% TAP AND FULL CAPACITY TAP CHANGER. OIL SHALL BE OIL SEED OR FR 3 FM APPROVED.(FURNISH BY OWNER AND INSTALL BY THE CONTRACTOR)

   PROVIDE A RSG PIPE FROM THE TRANSFORMER PRESSURE RELIEF VALVE UP TO THE FLOOR TO AVOID OIL DISPERSION DURING A FAULT.
2. TUBING TO CABLE CONNECTOR.
3. POWER FUSES 46KV, 250KBIL, 31.5KAIC, HOOK OPERATED S&C SMD-2C WITH FUSE UNIT (FUSE SIZE 3E)
4. SURGE ARRESTERS, STATION TYPE, 36KV RMS, 29KV MCOV COOPER POWER ULTRASIL MODEL#UHAA036029A184511
5. NOT USED.
6. CURRENT TRANSFORMERS (AT THE HV BREAKER BUSHINGS)
7. POTENTIAL TRANSFORMERS 46000(WYE):115V (WYE) (400:1)
8. NOT USED.
9. ALUMINUM STRUCTURE COMPLETE WITH LIGHTNING BAYONETS, AND DESIGNED FOR A TENSION OF 100O LBS PER WIRE ± 15 DEGREES IN THE HORIZONTAL PLANE FROM STRAIGHT PULL PLUS 170 MPH WINDS.
10. INSULATOR, SUSPENSION, 10 INCH DIAMETER, ANSI 52-3 GRAY # 70 OR POLYMER EQUIVALENT FOUR UNITS FOR EACH PHASE ONE UNIT FOR GROUNDING WIRE.
11. INSULATOR, POST TYPE, 46KV, NEMA TR 214, GRAY 70 OR SILICONE EQUIVALENT.
12. ANCHOR SHACKLE, 5/8 INCH PIN.
13. BALL CLEVIS, 5/8 INCH.
14. STRAIN CLAMP.
15. CABLE TO CABLE T CONNECTOR
16. INCOMING 38KV LINE.
17. NOT USED.
18. INCOMING GROUNDING WIRE.
19. 1 INCH IPS COPPER.
20. BARE STRANDED COPPER, MHD. # 4/0 AWG.
21. SEMI-FLEX COPPER CONNECTOR, TINNED.
22. REDUCER, 1" INCH IPS COPPER TO 4/0 STRAND COPPER CONDUCTOR (WHERE REQUIRED).
23. CABLE, GROUND, BARE COPPER # 4/0 AWG.
24. CABLE, GROUND, BARE COPPER # 1/0 AWG.
25. GROUND ROD 3/4" X 10'-0" COPPERWELD.
26. TRANSFORMER CONCRETE PAD
27. GROUND CLAMP, 1/0 STRANDED COPPER TO FENCE POST,
28. 24 IN. FLEXIBLE TINNED COPPER BRAID WITH MECHANICAL PRESSURE CONNECTORS.
29. GROUND CLAMP, BRAID TO GATE FRAME.
30. GROUND CLAMP, 1/0 COPPER CONDUCTOR & BRAID TO GATE POST.
31. GROUND ROD CLAMP, 3/4" ROD & 4/0 COPPER CABLE.
32. GROUND CABLE BRAZED JOINT, TYPE AS REQUIRED.
33. SPACE EVERY 3' TO 5'. COPPER TO ALUMINUM GROUND CLAMP, TO SUPPORT GROUND WIRE ON STRUCTURE,
34. TERMINAL, 1-1/0 STRAND COPPER TO 2-HOLE PLATE.
35. BOLT, STAINLESS STEEL, 1" X 1/2" DIA. LOCK & FLAT WASHERS.
36. FENCE, CHAIN-LINK, 8 FT. HIGH WITH BARBED WIRES.
37. BAKED ENAMEL SIGN "DANGER-PELIGRO-ALTO VOLTAJE".
38. POWER FUSE HANDLING TOOL, ADJUSTABLE 12' TO 18', IN A P.V.C. OR FIBERGLASS CONTAINER.
39. CAST ALUMINUM BRACKET, SIMILAR TO HUBBELL NPU LUMINAIRE, HIGH PRESSURE SODIUM, 100W, 120 VOLTS, WITH PHOTOCELL.
40. SPARE POWER FUSES IN A PVC OR FIBER GLASS CONTAINER, OR CABINET.
41. ALUMINUM STRUCTURE DESIGNED FOR A WIND LOAD OF 170MPH. CONTRACTOR SHALL SUBMITTED STRUCTURE SHOP DRAWING FOR EVALUATION.
42. SF6, 1200AMP, 48.3KV 250KV BIL CIRCUIT BREAKER (FURNISH BY OWNER AND INSTALL BY THE CONTRACTOR).
43. NOT USED.
44. NOT USED.
45. NOT USED.
46. NOT USED.
47. NOT USED.
48. SEALING BUSHING
49. PIPE TO CABLE GROUNDING CONNECTOR OZ GEDNEY CG6422
50. CABLE SUPPORT MOUNTED WITH A STRUCTOR CHANNEL WELDED TO THE STEEL. KINDORF C-755-4B
51. BARE STRANDED COPPER, MHD 500 MCM

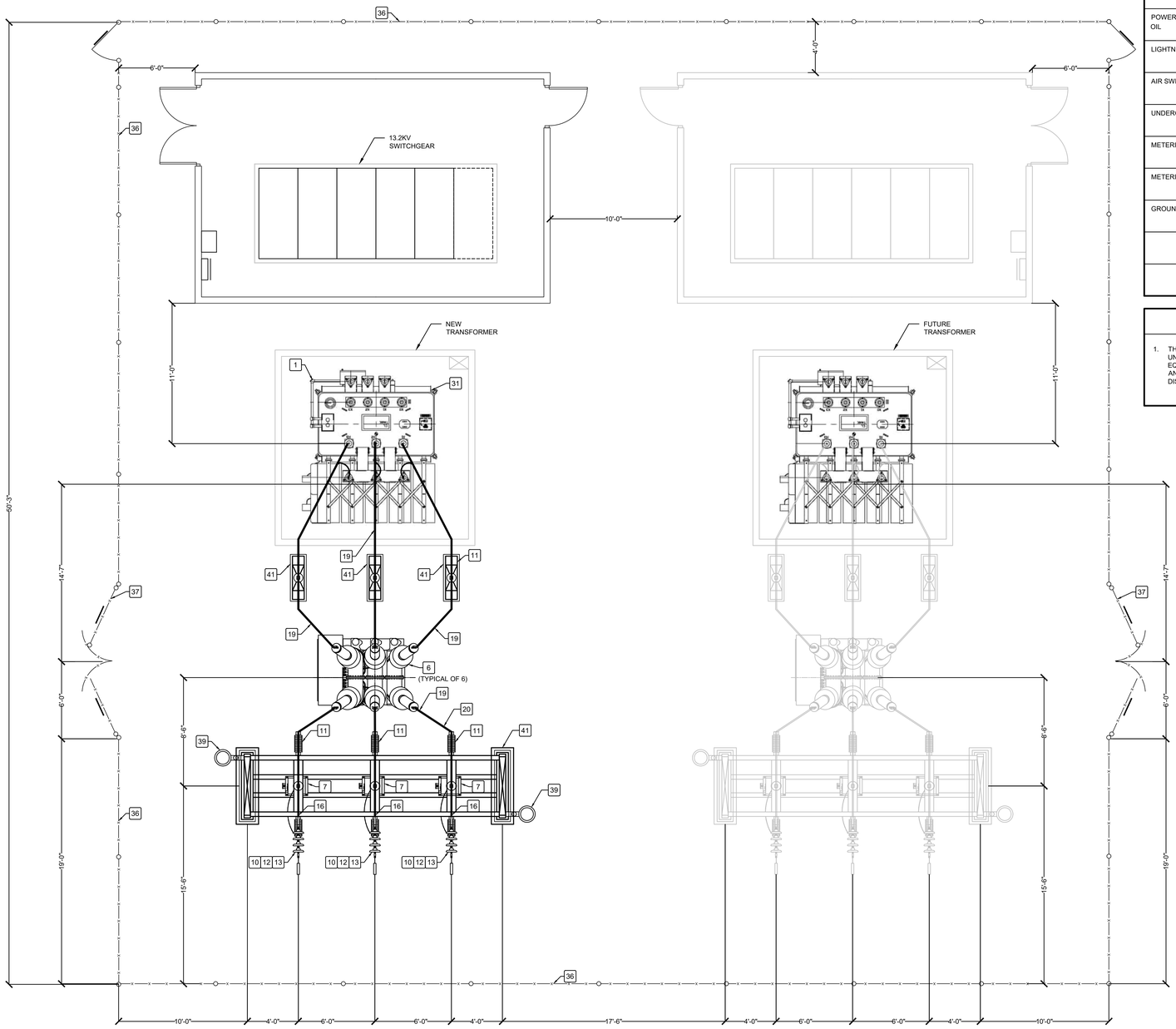

THE CONTRACTOR SHALL HIRE A TESTING COMPANY TO PERFORMED AND CERTIFY THE FOLLOWING EQUIPMENT TESTS.	
EQUIPMENT OR DEVICE	TEST
POWER TRANSFORMER	POWER FACTOR, EXITATION & TURNS RATIO.
POWER TRANSFORMER OIL	POWER FACTOR & ACIDITY.
LIGHTNING ARRESTERS	POWER FACTOR.
AIR SWITCH	CONTACT RESISTANCE.
UNDERGROUND CABLE	DC HIGH POTENTIAL.
METERING PT	POWER FACTOR & TURNS RATIO.
METERING CT	POWER FACTOR.
GROUND MESH	GROUND MESH RESISTANCE. GROUND MESH INTEGRITY.

NOTES

1. THE CONTRACTOR SHALL COORDINATE IN ADVANCE ALL UNDERGROUND CONDUITS INSTALLATION WITH THE EQUIPMENT FINAL SHOP DRAWINGS AND THE STRUCTURAL AND CIVIL DRAWINGS, IN ORDER TO AVOID ANY DISCREPANCIES WITH THE CONDUITS STUB UP LOCATION.

Christian Jose Lopez Mendez
Ingeniero
Licenciado
Lic. 24953PE
Puerto Rico

2026-691294-SRI-330056

DESIGNER'S CERTIFICATION

1. I certify that I am a licensed and registered engineer, surveyor, or architect (in compliance with Act 173 of 1988, as amended) and authorized by the project or land owner to submit these construction plans to LUMA Energy as operator and administrator of the Transmission and Distribution System of the Puerto Rico Electric Power Authority.
2. In compliance with Act No.135 of July 15, 1967, as amended known as the "Construction Plans or Projects Certification Act", I certify that I prepared the electric design for this project in accordance with the codes, Standards, rules, and regulations approved by LUMA, Puerto Rico Planning Board and Permits Management Office and the CIAPR Professional Practice Manual.

DESIGNER'S SIGNATURE

ENDORSEMENT

LUMA

Project Name: LRA- POWER GRID IMPROVEMENT

Project Number: -

Load: (kVA): 0 KVA Revision: -

ENDORSED BY

1. LUMA endorses the electric design shown in these construction plans based on the certification presented by the designer in compliance with Act 135 of July 15, 1967, as amended.
2. LUMA does not assume responsibility over the certified design. LUMA's endorsement does not relieve the designer from the professional responsibility assumed with the certification of these project's plans. This endorsement relieves neither the builder nor private inspector from compliance with standing dispositions from: National Electric Code, National Electric Safety Code; constructions standards, norms, and regulations from LUMA and other government agencies as well as federal and state laws ruling by the time construction begins.
3. This endorsement is valid for one (1) year. If electrical works have begun during this year, with prior notification to LUMA, the endorsement will still be valid until work's completion. In case there is no certified electrical work during this period, this endorsement will lose its validity. This endorsement is not to constitute an easement or to complete the Assignment, Transfer and Guarantee process of the equipment. For this, it is necessary to comply with all the provisions of the Easements Regulation for the Puerto Rico Electric Power Authority (7282 of 2007).

1" 0 1" 2" 5" 10"

SCALE: 1/4"=1'-0"

CMA ARCHITECTS & ENGINEERS LLC
1509 Ave FD Roosevelt Ste 200
Guaynabo, PR 00968-2706
Tel: 787-792-1509
Fax: 787-782-0687
E-mail: cma@cmapr.com
www.cmapr.com

© 2026 CMA A&E LLC

ROOSEVELT ROADS PUERTO RICO

ELECTRICAL POWER GRID

FEMA PA DR-4339 PROJECT 95275
LOCAL REDEVELOPMENT AUTHORITY FOR ROOSEVELT ROADS
CEIBA PUERTO RICO

DATE	REVISIONS	BY
08/17/2026	3 ISSUED FOR EQUIPMENT PROCUREMENT	CLM
02/26/2026	2 60% PRELIMINARY DESIGN (ELEC)	CLM
01/30/2026	1 35% CONCEPTUAL DESIGN	CLM

Job No.	22212
SCALE	1/4"=1'-0"
DATE	01/21/2026
DRAWN BY	CAD
CHECKED BY	CLM

TYPICAL 38KV SUBSTATION LAYOUT PLAN

TITLE

E3-01

DATE: Monday, August 17, 2026 1:13 PM USER: Nerdys Matos Perez FILE: C:\DM WORKSPACE\22212\CHECKOUT\E3-01.DWG

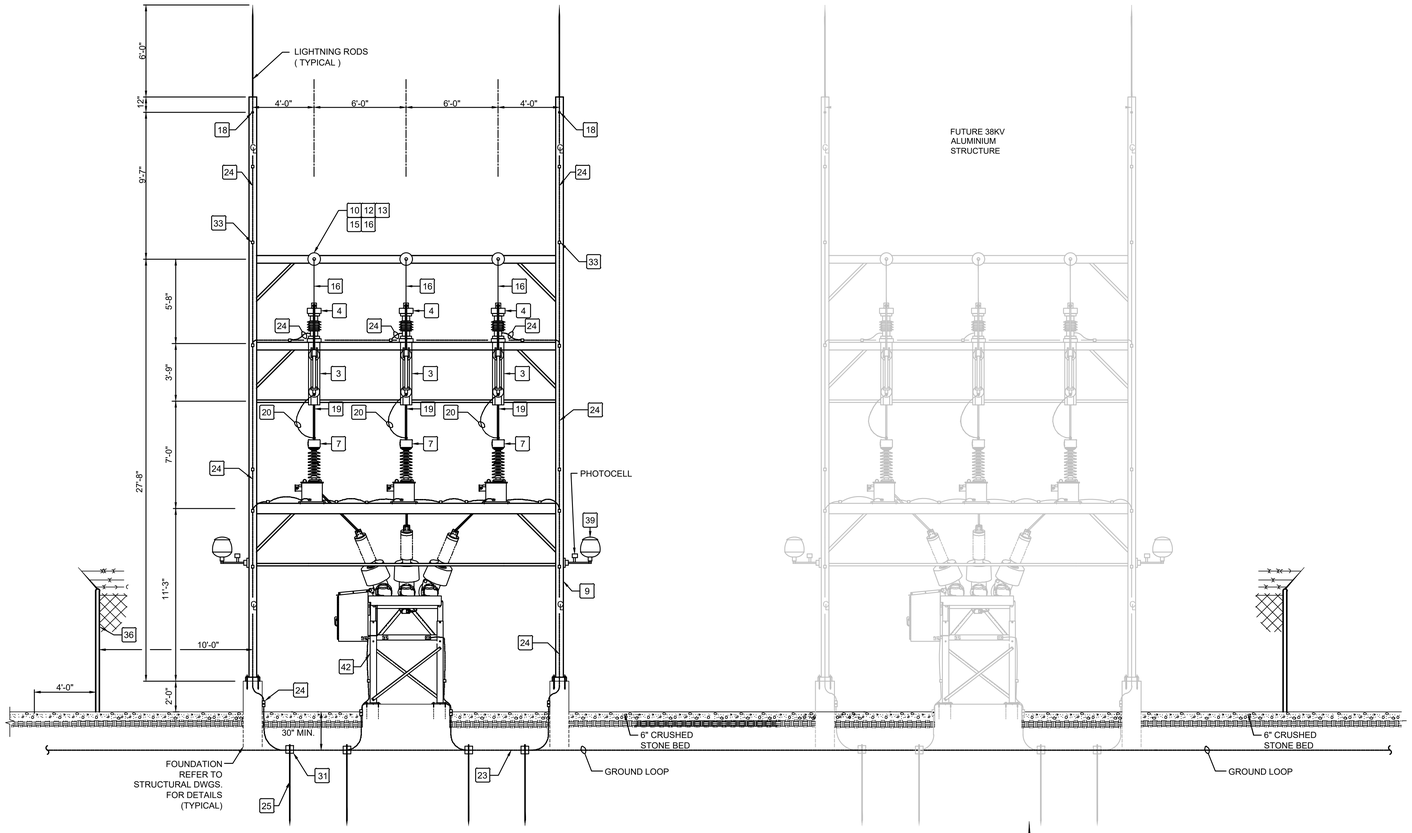

TYPICAL 38KV SUBSTATION SECTION

SCALE: 1/4"=1'-0"

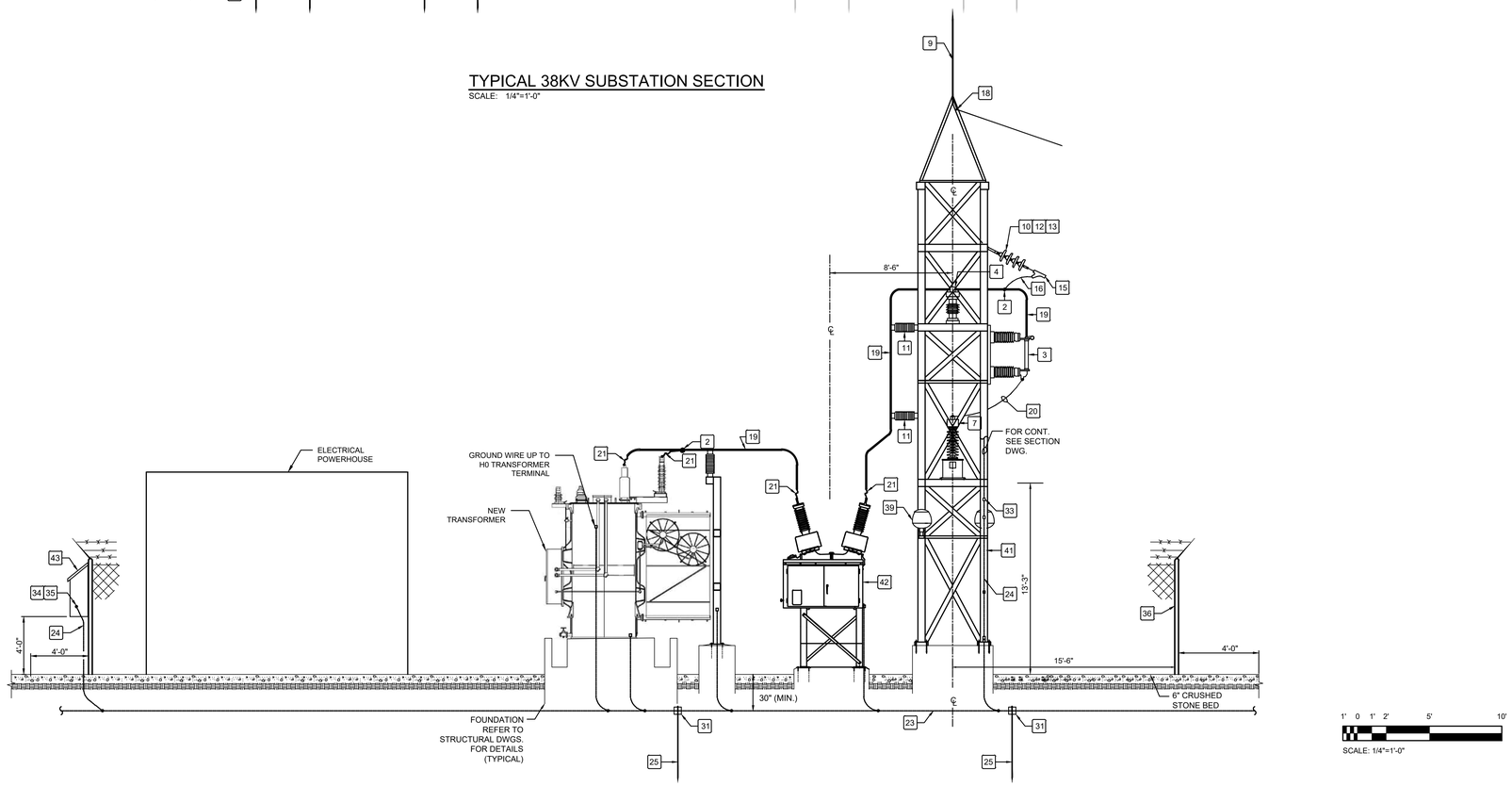

TYPICAL 38KV SUBSTATION ELEVATION

SCALE: 1/4"=1'-0"

NOTES

1. FOR SUBSTATION YARD SITE AND EQUIPMENT GROUNDING DETAILS REFER TO DRAWING E10-XX.
2. ALL THE ELECTRICAL EQUIPMENT, STRUCTURE AND FOUNDATION SIZES AND LAYOUT ARE APPROXIMATE BASED ON THE MANUFACTURER'S CATALOG INFORMATION. FINAL EQUIPMENT SIZES, LAYOUT AND FOUNDATION DETAILS SHALL BE COORDINATED WITH THE EQUIPMENT FINAL SHOP DRAWINGS.

Christian Jose Lopez Mendez
Ingeniero
Licenciado
Lic. 24953PE
Puerto Rico

2026-691294-SRI-330056

DESIGNER'S CERTIFICATION

1. I certify that I am a licensed and registered engineer, surveyor, or architect (in compliance with Act 173 of 1988, as amended) and authorized by the project or land owner to submit these construction plans to LUMA Energy as operator and administrator of the Transmission and Distribution System of the Puerto Rico Electric Power Authority.
2. In compliance with Act No.135 of July 15, 1967, as amended known as the "Construction Plans or Projects Certification Act", I certify that I prepared the electric design for this project in accordance with the codes, Standards, rules, and regulations approved by LUMA, Puerto Rico Planning Board and Permits Management Office and the CIAPR Professional Practice Manual.

DESIGNER'S SIGNATURE

LUMA

ENDORSEMENT

Project Name: LRA- POWER GRID IMPROVEMENT

Project Number: -

Load: (kVA): 0 KVA Revision: -

ENDORSED BY

1. LUMA endorses the electric design shown in these construction plans based on the certification presented by the designer in compliance with Act 135 of July 15, 1967, as amended.
2. LUMA does not assume responsibility over the certified design. LUMA's endorsement does not relieve the designer from the professional responsibility assumed with the certification of these project's plans. This endorsement relieves neither the builder nor private inspector from compliance with standing dispositions from: National Electric Code, National Electric Safety Code; constructions standards, norms, and regulations from LUMA and other government agencies as well as federal and state laws ruling by the time construction begins.
3. This endorsement is valid for one (1) year. If electrical works have begun during this year, with prior notification to LUMA, the endorsement will still be valid until work's completion. In case there is no certified electrical work during this period, this endorsement will lose its validity. This endorsement is not to constitute an easement or to complete the Assignment, Transfer and Guarantee process of the equipment. For this, it is necessary to comply with all the provisions of the Easements Regulation for the Puerto Rico Electric Power Authority (7282 of 2007).

CMA ARCHITECTS & ENGINEERS LLC
1509 Ave FD Roosevelt Ste 200
Guaynabo, PR 00968-2706
Tel: 787-792-1509
Fax: 787-782-0687
E-mail: cma@cmapr.com
www.cmapr.com
© 2026 CMA A&E LLC

ROOSEVELT ROADS PUERTO RICO

ELECTRICAL POWER GRID

FEMA PA DR-4339 PROJECT 95275
LOCAL REDEVELOPMENT AUTHORITY FOR ROOSEVELT ROADS
CEIBA PUERTO RICO

DATE	REVISIONS	BY
08/17/2026	4 ISSUED FOR EQUIPMENT PROCUREMENT	CLM
02/26/2026	3 60% PRELIMINARY DESIGN (ELEC)	CLM
01/30/2026	2 35% CONCEPTUAL DESIGN	CLM

Job No.	22212
SCALE	1/4"=1'-0"
DATE	01/21/2026
DRAWN BY	CAD
CHECKED BY	CLM

TYPICAL 38KV SUBSTATION ELEVATION PLAN

TITLE

E3-02

DATE: Monday, August 17, 2026 1:11 PM USER: Nerdys Matos Perez FILE: C:\DM WORKSPACE\22212\CHECKOUT\E3-02.DWG

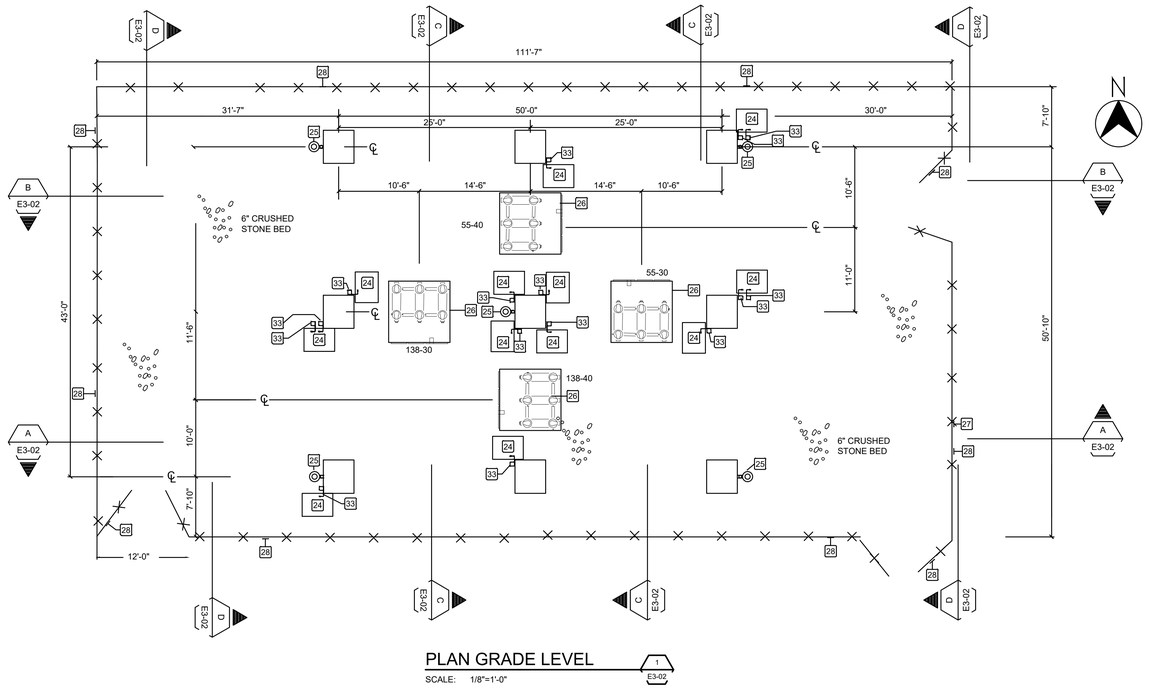

PLAN GRADE LEVEL

SCALE: 1/8"=1'-0"

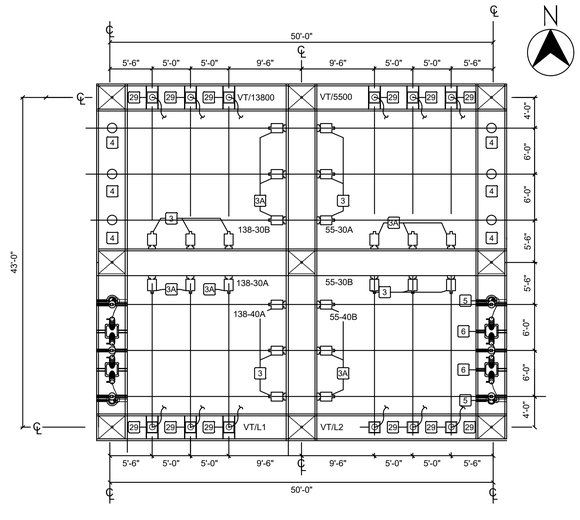

PLAN - LOWER STRUCTURE

SCALE: 1/8"=1'-0"

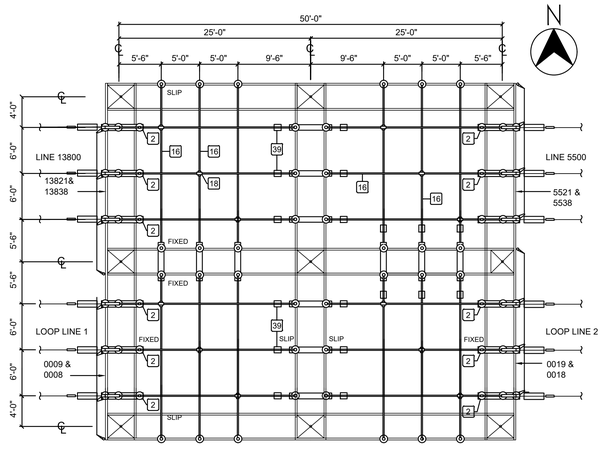

PLAN - UPPER STRUCTURE

SCALE: 1/8"=1'-0"

LEGEND

1	TRANSFORMER, THREE PHASE, 46 KV INSULATION (250 KV BIL), RATED 10000/12500KVA 55 C, FA 65 C , 38 KV DELTA TO 7620/13.2 KV VOLTS, 4 WIRE, WYE CONNECTED (2-1/2%) FIXED TAPS, TWO ABOVE AND TWO BELOW RATED PRIMARY VOLTAGE IN THE HIGH VOLTAGE WINDING, LIGHTNING ARRESTORS MOUNTED ON THE TRANSFORMER COVER AND CONNECTED TO THE TRANSFORMER PRIMARY BUSHINGS LOW VOLTAGE PHASE BUSHINGS MOUNTED ON THE TANK SIDE WALL WITHIN AIR-FILLED JUNCTION BOX.
2	DISCONNECT SWITCH, VERTICAL BREAK HORN GAP, 46KV, 250KV BIL, 1200 AMP MOMENTARY, 3 POLES, GANG OPERATED COMPLETE WITH OPERATING MECHANISM JOSLYN RF-2, & S & C R-9, WITH GROUND SWITCH
3	SIDE BREAK DISCONNECT SWITCH VERTICAL MOUNTED GANG OPERATED, 46KV, 1200AMP WITH OPERATING MECHANISH JOSLYN RB-1 CLOCKWISE OPENING.
3A	SIDE BREAK DISCONNECT SWITCH VERTICAL MOUNTED GANG OPERATED, 46KV, 1200AMP WITH OPERATING MECHANISH JOSLYN RB-1 COUNTER CLOCKWISE OPENING.
4	SURGE ARRESTERS, STATION TYPE, 36KV OHIO BRASS MP-36, GENERAL ELECTRICAL 9L11 MAA036.
5	CURRENT TRANSFORMERS BY P.R.E.P.A.
6	POTENTIAL TRANSFORMERS BY P.R.E.P.A.
7	METER BY P.R.E.P.A.
8	ALUMINIUM STEEL STRUCTURE COMPLETE WITH LIGHTNING BAYONETS, AND DESIGNED FOR A TENSION OF 1000 LBS. PER WIRE ± 15 DEGREES IN THE HORIZONTAL PLANE FROM THE STRAIGHT PULL PLUS 170 MPH WIND
9	INSULATOR, SUSPENSION 10 INCH DIAMETER, ANSI 52-3 GRAY # 3.
10	INSULATOR, POST TYPE, 45KV, NEMA TR 214, GRAY 70.
11	ANCHOR SHACKLE, 5/8 INCH PIN.
12	BALL CLEVIS, 5/8 INCH.
13	STRAIN CLAMP
14	INCOMING 38KV LINE.
15	STATIC WIRE, ALUMOWELD 3 NO. 6, AWG.
16	2" SCH. 40 AL
17	500 MCM AL, 9 STRAND
18	TEE, 2" IPS TUBING RUN TO 500 MCM AL
19	SEMI-FLEX CONNECTOR TINNED
20	CABLE, GROUND, BARE COPPER # 4/0 AWG.
21	CABLE, GROUND, BARE COPPER # 1/0 AWG.
22	GROUND ROD 3/4" X 10'-0" COPPERWELD.
23	GROUND CLAMP, TO SUPPORT GROUND WIRE ON STRUCTURE, SPACE EVERY 3'-0" TO 5'-0".
24	1/4" X 3'-0" X 4'-0" ALUMINUM PLATE PLATAFORM FOR SWITCH OPERATOR, SEE P.R.E.P.A. STD. 13 ABS-1.
25	LUMINAIRE, METAL HALIDE, 100W, 240 VOLT, WITH CAST ALUMINUM BRACKET, SIMILAR TO HOLOPHANE SUB-STATION LUMINAIRE WITH PHOTOCELL CONTROL.
26	46 KV 3F6 CIRCUIT BREAKER ABB 38 PM 31-12
27	FENCE, CYCLONE, 8FT. HIGH WITH THREE STRANDS OF BARBED WIRE, GALVANIZED GAGE NO.6.
28	BAKED ENAMEL SIGN "DANGER-PELIGRO-ALTO VOLTAJE".
29	POTENTIAL TRANSFORMER FOR RELAYING
30	GROUND CLAMP, 1/0 STRANDED COPPER TO FENCE POST,
31	24 IN. COPPER BRAID, FLEXIBLE, TINNED WITH MECHANICAL PRESSURE CONNECTORS.
32	CLAMP, GROUND, BRAID TO GATE FRAME.
33	SWITCH MECHANISM OPERATOR HANDLE
34	CLAMP, GROUND, 1/0 STRANDED COPPER CABLE & BRAID TO GATE POST.
35	GROUND CABLE BRAZED JOINT, TYPE AS REQUIRED.
36	TRANSFORMER DIKE AND FOUNDATION
37	TUBE TO CABLE CONNECTOR.
38	NOT USED
39	TEE, 2" IPS AL RUN, 2" IPS AL TAP
40	4/0 AL CONDUCTOR
41	CORONA CAP, 2" STD. STRENGTH AL BUS
42	STRAIGHT BOLTED 4/0 AL CABLE TO 2 HOLE FLAT
43	STRAIGHT BOLTED 500 MCM AL CABLE TO 2 HOLE FLAT
44	BUS SUPPORT, 5" B.C. STA. POST TO 2" AL BUS
45	CABLE SUPPORT, 5" B.C. STA. POST TO 500 MCM CABLE
46	TEE, 2" IPS AL RUN, 4/0 AL TAP
48	COUPLER, STRAIGHT, 2" AL TUBE TO 500 MCM CABLE
49	POWER FUSES 46KV 250KV BIL, 31500 SYM, AMP INTERRUPTING CAPACITY, HOOK OPERATED S&C SMD-2C WITH 100EAMP FUSE UNIT

NOTES

1. THE ENTIRE INSTALLATION SHALL BE MADE ACCORDING TO THE APPLICABLE CONSTRUCTION STANDARDS OF P.R.E.P.A.
2. ALL WORK ON EXISTING LINES SHALL BE DONE BY P.R.E.P.A. AT OWNERS EXPENSE.
3. FOR ALL STANDARDS NUMBERS ON THESE DRAWINGS REFER TO P.R.E.P.A. STANDARDS MANUALS ON STREET LIGHTING & TRANSMISSION LINES.
4. UP TO ONE MILE FROM THE SEA SHORE, ALL EQUIPMENT SHALL BE STAINLESS STEEL. (SITE LOCATION EXCEEDS ONE MILE)
5. APPROVAL BY P.R.E.P.A. DOES NOT INCLUDE STRUCTURAL & FOUNDATION DETAILS.
6. CONTRACTOR SHALL NOTIFY P.R.E.P.A. PREVIOUS TO BEGINING ELECTRICAL WORK FOR PROPER APPROVAL, COORDINATION & INSPECTION.
7. CONTRACTOR SHALL LEAVE THE ELECTRICAL SYSTEM IN PERFECT WORKING CONDITION, & IS RESPONSIBLE FOR ANY DEFECTS FOUND WHEN SERVICE IS CONNECTED.
8. ALL CONSTRUCTION WORK SHALL BE DONE IN ACCORDANCE WITH THE PLANS, SPECIFICATION & CONSTRUCTION DRAWINGS. THE LAST EDITION OF THE NATIONAL ELECTRICAL CODE SHALL BE FOLLOWED EXCEPT WHERE LOCAL REGULATIONS ARE MORE STRINGENT, IN WHICH CASE, LOCAL REGULATIONS SHALL GOVERN.
9. GROUND SYSTEM SHALL HAVE A MAXIMUM RESISTANCE OF TEN (10) OHMS. THE CONTRACTOR SHALL VERIFY THIS CONDITION IN THE FIELD.
10. THERE SHALL NOT BE WATER, NOR SEWAGE PIPE LINES UNDER THE FLOOR OF SUBSTATION.
11. ALL EQUIPMENT SHALL BE CONSTRUCTED ACCORDING TO ANSI, NEMA & P.R.E.P.A. STANDARDS.
12. VENDOR SHALL PROVIDE ONE SPARE FUSE FOR EACH PRIMARY HOLDER.
13. OPEN BLADE OR FUSE OR PRIMARY SWITCH SHALL BE DEENERGIZED.
14. ARRESTER SHALL BE CONNECTED TO GROUND ROD AT THE BOTTOM OF THE STRUCTURE. THE GROUNDING ROD SHALL BE CONNECTED TO THE GROUNDING MAT.
15. ARRESTER CONNECTIONS TO GROUNDING ROD SHALL BE FREE OF SHARP BENDS & SHALL AVOID 90° BENDS ON ARRESTER CONNECTION.
16. INSTALL A GROUND ROD FOR THE CONNECTION OF THE TRANSFORMER GROUND TERMINAL. THE GROUND ROD SHALL BE CONNECTED TO THE GROUNDING MAT.
17. BEFORE ENERGIZING THE 38Kv SUBSTATION THE FOLLOWING TESTS SHALL BE PERFORMED:
    - A - INSULATION AC (POWER FACTOR)
    - B - INSULATION DC (MEGGER)
    - C - TURN RATIO
    - D - BUSHINGS INSULATION
    - E - EXCITING CURRENT
    - F - OIL POWER FACTOR
    - G - OIL ACIDITY
    - H - GROUND RESISTANCE
    - I - DISCONNECT SWITCH CONTACT RESISTANCE

MINIMUM CLEARANCES (INCHES)*

LINE TO GROUND	18
HORNGAP SWITCH ℄ to ℄	72
BUS SUPPORTS, ℄ to ℄	48
LINE TO GROUND	21
OVERHEAD TO GRADE	120

* ALL CLEARANCES PER NEMA SG6

Christian Jose Lopez Mendez
Ingeniero
Licenciado
Lic 24953PE
Puerto Rico

2026-691294-SRI-330056

DESIGNER'S CERTIFICATION

1. I certify that I am a licensed and registered engineer, surveyor, or architect (in compliance with Act 173 of 1988, as amended) and authorized by the project or land owner to submit these construction plans to LUMA Energy as operator and administrator of the Transmission and Distribution System of the Puerto Rico Electric Power Authority.
2. In compliance with Act No.135 of July 15, 1967, as amended known as the "Construction Plans or Projects Certification Act", I certify that I prepared the electric design for this project in accordance with the codes, Standards, rules, and regulations approved by LUMA, Puerto Rico Planning Board and Permits Management Office and the CIAPR Professional Practice Manual.

DESIGNER'S SIGNATURE

LUMA

ENDORSEMENT

Project Name: LRA- POWER GRID IMPROVEMENT

Project Number: -

Load: (kVA): 0 KVA Revision: -

ENDORSED BY

1. LUMA endorses the electric design shown in these construction plans based on the certification presented by the designer in compliance with Act 135 of July 15, 1967, as amended.
2. LUMA does not assume responsibility over the certified design. LUMA's endorsement does not relieve the designer from the professional responsibility assumed with the certification of these project's plans. This endorsement relieves neither the builder nor private inspector from compliance with standing dispositions from: National Electric Code, National Electric Safety Code; constructions standards, norms, and regulations from LUMA and other government agencies as well as federal and state laws ruling by the time construction begins.
3. This endorsement is valid for one (1) year. If electrical works have begun during this year, with prior notification to LUMA, the endorsement will still be valid until work's completion. In case there is no certified electrical work during this period, this endorsement will lose its validity. This endorsement is not to constitute an easement or to complete the Assignment, Transfer and Guarantee process of the equipment. For this, it is necessary to comply with all the provisions of the Easements Regulation for the Puerto Rico Electric Power Authority (7282 of 2007).

CMA ARCHITECTS & ENGINEERS LLC
1509 Ave FD Roosevelt Ste 200
Guaynabo, PR 00968-2706
Tel: 787-792-1509
Fax: 787-782-0687
E-mail: cma@cmapr.com
www.cmapr.com
© 2026 CMA A&E LLC

ROOSEVELT ROADS PUERTO RICO

ELECTRICAL POWER GRID

FEMA PA DR-4339 PROJECT 95275
LOCAL REDEVELOPMENT AUTHORITY FOR ROOSEVELT ROADS
CEIBA PUERTO RICO

DATE	REVISIONS	BY
08/17/2026	A ISSUED FOR EQUIPMENT PROCUREMENT	CLM

Job No.	22212
SCALE	1/8"=1'-0"
DATE	07/30/2026
DRAWN BY	CAD
CHECKED BY	CLM

38KV SWITCHYARD LAYOUT PLAN

TITLE

E3-03

DATE: Monday, August 17, 2026 1:11 PM USER: Nerdys Matos Perez FILE: C:\DM WORKSPACE\22212\CHECKOUT\E3-03.DWG

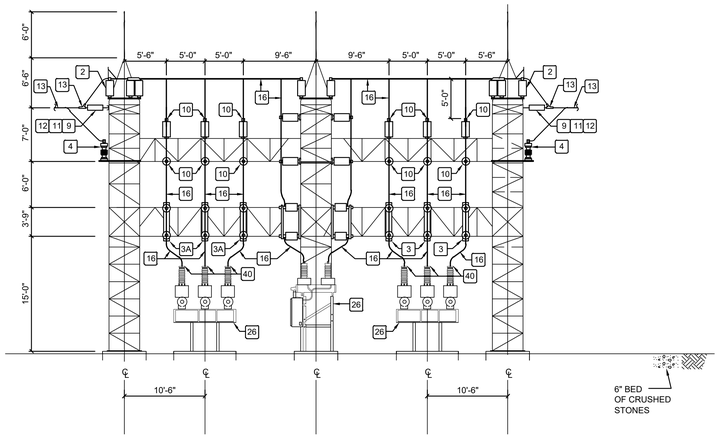

SECTION A

SCALE: 1/8"=1'-0" E3-02

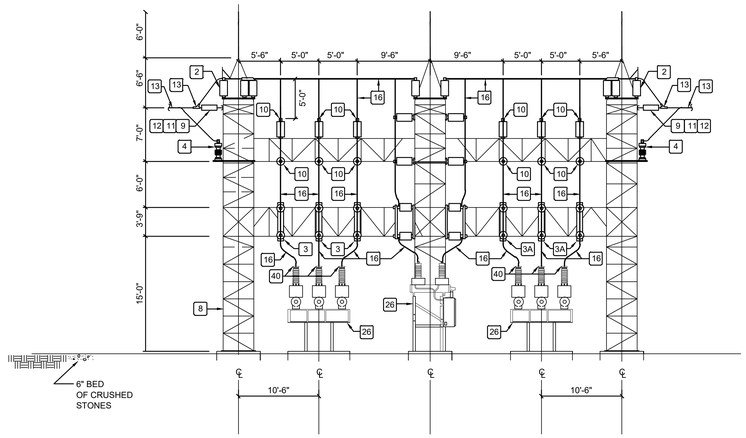

SECTION B

SCALE: 1/8"=1'-0" E3-02

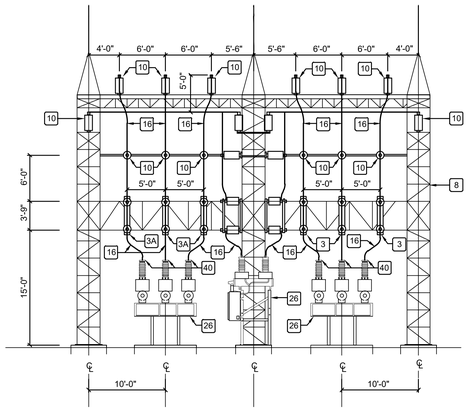

SECTION C

SCALE: 1/8"=1'-0" E3-02

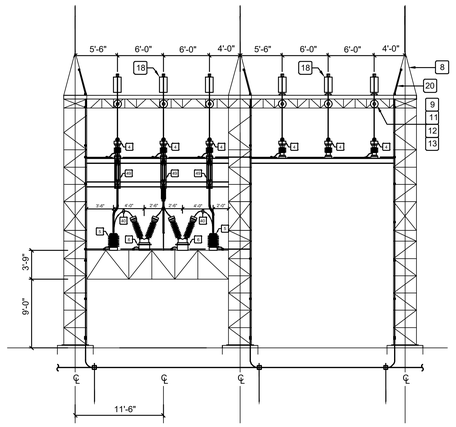

SECTION D

SCALE: 1/8"=1'-0" E3-02

Christian Jose Lopez Mendez
Ingeniero
Licenciado
Lic. 24953PE
Puerto Rico

2026-691294-SRI-330056

DESIGNER'S CERTIFICATION

1. I certify that I am a licensed and registered engineer, surveyor, or architect (in compliance with Act 173 of 1988, as amended) and authorized by the project or land owner to submit these construction plans to LUMA Energy as operator and administrator of the Transmission and Distribution System of the Puerto Rico Electric Power Authority.
2. In compliance with Act No.135 of July 15, 1967, as amended known as the "Construction Plans or Projects Certification Act", I certify that I prepared the electric design for this project in accordance with the codes, Standards, rules, and regulations approved by LUMA, Puerto Rico Planning Board and Permits Management Office and the CIAPR Professional Practice Manual.

DESIGNER'S SIGNATURE

LUMA

ENDORSEMENT

Project Name: LRA- POWER GRID IMPROVEMENT

Project Number: -

Load: (kVA): 0 KVA Revision: -

ENDORSED BY

1. LUMA endorses the electric design shown in these construction plans based on the certification presented by the designer in compliance with Act 135 of July 15, 1967, as amended.
2. LUMA does not assume responsibility over the certified design. LUMA's endorsement does not relieve the designer from the professional responsibility assumed with the certification of these project's plans. This endorsement relieves neither the builder nor private inspector from compliance with standing dispositions from: National Electric Code, National Electric Safety Code; constructions standards, norms, and regulations from LUMA and other government agencies as well as federal and state laws ruling by the time construction begins.
3. This endorsement is valid for one (1) year. If electrical works have begun during this year, with prior notification to LUMA, the endorsement will still be valid until work's completion. In case there is no certified electrical work during this period, this endorsement will lose its validity. This endorsement is not to constitute an easement or to complete the Assignment, Transfer and Guarantee process of the equipment. For this, it is necessary to comply with all the provisions of the Easements Regulation for the Puerto Rico Electric Power Authority (7282 of 2007).

CMA ARCHITECTS & ENGINEERS LLC
1509 Ave FD Roosevelt Ste 200
Guaynabo, PR 00968-2706
Tel: 787-792-1509
Fax: 787-782-0687
E-mail: cma@cmapr.com
www.cmapr.com
© 2026 CMA A&E LLC

ROOSEVELT ROADS PUERTO RICO

ELECTRICAL POWER GRID

FEMA PA DR-4339 PROJECT 95275

LOCAL REDEVELOPMENT AUTHORITY FOR ROOSEVELT ROADS

CEIBA PUERTO RICO

DATE	REVISIONS	BY
08/17/2026	1 ISSUED FOR EQUIPMENT PROCUREMENT	CLM

DATE	REVISIONS	BY

DATE	REVISIONS	BY

Job No.	22212
SCALE	1/8"=1'-0"
DATE	07/30/2026
DRAWN BY	CAD
CHECKED BY	CLM

38KV SWITCHYARD ELEVATION PLAN

TITLE

E3-04

DATE: Monday, August 17, 2026 1:11 PM USER: Nerdys Matos Perez FILE: C:\DM WORKSPACE\222121\CHECKOUT\E3-04.DWG

GENERAL NOTES

1. THESE DRAWINGS CORRESPOND WITH THE INSCRIPTION DRAWINGS SUBMITTED TO THE "ADMINISTRACION DE REGLAMENTOS Y PERMISOS" (ARPE).
2. THE PROJECT OWNER IS RESPONSIBLE TO REQUEST AND OBTAIN, PRIOR TO THE PROJECT BEGINNING DATE, ALL ENDORSEMENTS, PERMITS AND EASEMENTS REQUIRED BY STATE, MUNICIPAL, FEDERAL GOVERNMENTAL AND PRIVATE ENTITIES RELATED TO THE PROPOSED TYPE OF PROJECT.
3. THE OWNER OF THIS WORK SHALL CONTRACT THE SERVICES OF A CIAPR MEMBER AND LICENSED PROFESSIONAL ENGINEER TO INSPECT THE ELECTRICAL CONSTRUCTION WORKS ACCORDING TO LAW NO.7 OF JULY 19, 1985, AS AMENDED, AND WITH THE CURRENT EDITION OF THE "REGLAMENTO DE CERTIFICACION DE PLANOS DE PROYECTOS DE CONSTRUCCION ELECTRICA" OF LUMA. THE OWNER SHALL NOTIFY TO LUMA THE NAME OF THE ASSIGNED PRIVATE INSPECTOR PRIOR TO THE BEGINNING OF THE PROJECT.
4. THE EXECUTION OF THE ELECTRICAL WORKS, AS DESIGNED ON THESE DRAWINGS, SHALL FOLLOW THE BEST ELECTRICAL INDUSTRY AND CONSTRUCTION PRACTICES ACCORDING TO THE NORMS AND REGULATIONS ADOPTED BY LUMA, INCLUDING THE GD INTERCONNECTION REGULATION 8916, AND THE CONCERNING AGENCIES, AS WELL AS WITH THE CODES, NEC, NESC AND ADDITIONAL ADOPTED STANDARDS OF THE IEEE, NFPA, NEMA AND ANSI.
5. THE CONTRACTOR IS NOT AUTHORIZED TO MAKE VARIATIONS TO THIS DESIGN. IT IS THE CONTRACTOR'S RESPONSIBILITY TO CONSULT THE DESIGNER OR THE DESIGNATED INSPECTOR FOR THIS WORK ABOUT ANY DOUBT THAT MAY ARISE FROM THE INTERPRETATION OF DRAWINGS, ABOUT THE EXECUTION OF THE PROPOSED WORKS, TECHNICAL SPECIFICATIONS OR DISCREPANCIES BETWEEN THE EXISTING FIELD CONDITIONS AND THOSE CONSIDERED FOR DESIGN PURPOSES.
6. THE OWNER OR THE ELECTRICAL CONTRACTOR SHALL NOTIFY TO LUMA THE DATE FOR THE BEGINNING OF THESE WORKS BY SUBMITTING TO THE ENGINEERING DEPARTMENT OF THE CORRESPONDING REGION THE "NOTIFICACION DE COMIENZO DE PROYECTO" DOCUMENT, AT LEAST FIFTEEN DAYS PRIOR TO THE PROPOSED DATE.
7. THE PRIVATE INSPECTOR AND THE ELECTRICAL CONTRACTOR ARE RESPONSIBLE OF ATTENDING A PRE-CONSTRUCTION MEETING TO BE COORDINATED WITH THE UTILITY'S ELECTRICAL DISTRIBUTION ENGINEERING DEPARTMENT OF THE CORRESPONDING REGION.
8. ALL WORK ON ENERGIZED LINES, INCLUDING THE UTILITY GRID CONNECTION OF THIS PROJECT, SHALL BE DONE BY LUMA. THE PROPOSER IS RESPONSIBLE FOR ALL EQUIPMENT COSTS, MATERIALS AND LABOR. THE PROPOSER SHALL REQUEST A COST ESTIMATE TO LUMA FOR THESE WORKS. THE COST ESTIMATE WILL BE VALID FOR THREE MONTHS FROM THE ISSUED DATE.
9. ANY WORK WITHIN LUMA ELECTRICAL EASEMENT LIMITS WITHOUT THE WRITTEN AUTHORIZATION OF LUMA IS PROHIBITED.
10. LUMA WILL NOT APPROVE THE UTILITY GRID CONNECTION OF PROJECTS WITH INVASION OF EASEMENT CONDITIONS OR THAT ARE NOT IN COMPLIANCE WITH THE REQUIRED SAFETY CLEARANCES.
12. THE CONTRACTOR SHALL COORDINATE WITH LUMA PROTECTION DEPARTMENT THE FUSES AT EXISTING LUMA SUBSTATION AND THE NEW SUBSTATION.

SYSTEMS

1. THE PROJECT OWNER IS RESPONSIBLE TO PERFORM THE REQUIRED PRIMARY AND SECONDARY CABLE TESTS WITH ITS TERMINATIONS. THE RESULTS SHALL FOLLOW WITHIN THE PARAMETERS ESTABLISHED BY LUMA FOR SUCH TESTS. THESE TESTS SHALL BE PERFORMED IN COORDINATION WITH A REPRESENTATIVE OF THE INSPECTION OFFICE OF THE UTILITY'S CORRESPONDING ELECTRICAL DISTRIBUTION ENGINEERING DEPARTMENT.
2. DURING THE CABLE INSTALLATION THE CABLE SHALL BE PROTECTED FROM HUMIDITY AND SCRATCHES. THE CONTRACTOR IS RESPONSIBLE OF INSTALLING THE CABLE BY EMPLOYING THE RECOMMENDED PULLING PRACTICES IN ORDER TO NOT EXCEED THE SPECIFIED CABLE TENSION.
3. THE MANHOLE COVERS TO BE INSTALLED IN THE PLANTING AREA SHALL BE PROTECTED BY A REINFORCED CONCRETE SLAB, AS PER THE SPECIFICATIONS ON THE STANDARD URD-52.
4. ON CASES WHERE THE PROJECT IS LOCATED WITHIN A MILE OF DISTANCE FROM A SALTY WATER BODY THE RISER CONDUITS SHALL BE PVC SCHEDULE 80 OR FIBERGLASS AS APPROVED BY LUMA.
5. THE DUCTBANKS OF THE UNDERGROUND SYSTEM WILL BE INSPECTED BY LUMA PRIOR TO BEING COVERED AND COMPACTED.
6. ANY DUCTBANK EXPOSED TO VEHICULAR TRAFFIC SHALL BE PROTECTED WITH CONCRETE. ANY DUCTBANK LOCATED NEAR OTHER UTILITIES INSTALLATION SHALL HAVE A MINIMUM CLEARANCE OF 13 INCHES FROM THEM.
7. THE QUANTITY OF SPARE REPLACEMENT FUSES TO BE PROVIDED BY THE CONTRACTOR WILL BE THE SAME AS THE QUANTITY OF FUSES INSTALLED IN EACH SUBSTATION.
8. THE CONNECTORS TO BE USED FOR THE ANTENNAS CONNECTION AND SUBSTATIONS TO GROUND SHALL BE OF EXOTHERMIC WELD (THERMO-WELD) OR COMPRESSION TYPE.
9. THE CONTRACTOR SHALL PROVIDE THE FISHWIRE IN EVERY SPARE CONDUIT.
10. ANY DISTRIBUTION SYSTEM SHALL HAVE A MAXIMUM GROUND RESISTANCE OF 10 OHMS. A GROUNDING ROD WILL BE INSTALLED FOR THE CONNECTION OF THE NEUTRAL TO GROUND EVERY FOUR POLES OR EVERY 1000 FT. AND ON ALL TRANSFORMERS.
11. EVERY POLE CONCRETE BASE SHALL INCLUDE TWO SPARE CONDUITS FOR FUTURE USE, AS REQUIRED BY LUMA.
12. THE POLE BASES SHALL BE INSPECTED BY LUMA DURING CONSTRUCTION.

MATERIALS

1. ALL EQUIPMENT USED ON THE CONSTRUCTION SHALL COMPLY WITH IEEE, ANSI, NEMA AND ASTM APPLICABLE STANDARDS.
2. THE CONTRACTOR IS RESPONSIBLE TO VERIFY WITH LUMA THAT ALL MATERIALS OR EQUIPMENT TO BE USED ARE APPROVED BY LUMA PRIOR TO THEIR INSTALLATION. LUMA RESERVES ITS RIGHT TO ACCEPT ANY EQUIPMENT TO BE TRANSFERRED TO ITS USE AND/ OR AS ITS PROPERTY.
3. ALL EQUIPMENT AND MATERIAL (INCLUDING TRANSFORMERS AND SUBSTATION CABINETS) TO BE INSTALLED WITHIN ONE MILE FROM A SALTY WATER BODY SHALL BE BUILT IN STAINLESS STEEL, WITH THE EXCEPTION OF METER BASES.
4. ON ALL UNDERGROUND SYSTEMS 15 KV TERMINATIONS SHALL BE USED FOR PRIMARY CABLES AND 46 KV TERMINATIONS SHALL BE USED FOR 38 KV LINES.
5. ON AERIAL SYSTEMS 15 KV POLYMER INSULATORS SHALL BE USED FOR DISTRIBUTION VOLTAGES AND 46 KV POLYMER INSULATORS SHALL BE USED FOR 38 KV LINES.
6. THE CONTRACTOR IS RESPONSIBLE OF LABELING EVERY TRANSFORMER TO BE TRANSFERRED TO LUMA WITH A PROPERTY NUMBER PROVIDED BY THE CORRESPONDING DISTRIBUTION ENGINEERING DEPARTMENT.
7. ANY TRANSFORMER TO BE CONNECTED TO LUMA SYSTEM SHALL BE DESIGN AND FABRICATED WITH IMPROVED LOSSES CHARACTERISTICS AS PER LUMA COMMUNICATION LETTER 10-02.

SPECIAL NOTES

1. THE PROJECT OWNER WILL CONTRIBUTE TO LUMA:

   □ THE SUM OF $_____ FOR IMPROVEMENTS TO THE EXISTING ELECTRICAL SYSTEM. THIS SUM SHALL BE PAID IN ANY LUMA COMMERCIAL OFFICE WITH POSTAL MONEY ORDER OR CERTIFIED CHECK TO BE CREDITED TO ACCOUNT CIG419.06XXX.

   □ THE WORK REQUIRED ON THE PROJECT EVALUATION DATED _____ 2023.

   THIS CONTRIBUTION IS DONE ACCORDING TO THE PROPOSED LOAD AS PER THE "REGLAMENTO PARA DETERMINAR Y COBRAR LAS APORTACIONES DE PERSONAS O INSTITUCIONES EN PROYECTOS DE DESARROLLO VIGENTE".
2. LUMA WILL NOT ENERGIZE THE PROJECT UNTIL THE R.O.W. (RIGHT OF WAY) HAS BEEN GRANTED THROUGH THE CERTIFICATION EXPEDITE BY THE JUDICIARY DIVISION OF THE LUMA THE EXTENSION OF THIS NOTE APPLIES TO ALL TYPES OF R.O.W. BEING INSIDE OR OUTSIDE THE PROJECT LIMITS.
3. THE INSTALLATION OF METERING SYSTEMS SHALL BE COORDINATED WITH LUMA PONCE REGION METERING OFFICE. THE DESIGNER OR THE ELECTRICAL CONTRACTOR SHALL COORDINATE WITH THIS OFFICE THE EQUIPMENT AND MATERIALS TO BE USED AND THE LOCATION OF THE EQUIPMENT.
4. THE INSTALLATION OF SUBSTATIONS, TRANSFORMERS OR OTHER ELECTRICAL EQUIPMENT OVER WATER LINES, SEWAGE SYSTEMS OR OTHER UTILITIES IS PROHIBITED.

DESIGN CRITERIA

1. THE DESIGN CRITERIA FOR THE AERIAL ELECTRICAL SYSTEM AS PER LUMA DISTRIBUTION DESIGN CRITERIA DOCUMENT-DOC. No. 4300.001-V04.

L E G E N D

SYMBOL	DESCRIPTION
——→——	EXISTING GUY WIRE
(N) ——→——	PROPOSED GUY WIRE
——T——	THIRD PARTY COMMUNICATION
——240/120V——	SECONDARY TRIPLEX (#1/0)
——240/120V——ϟ	SECONDARY SERVICE DROP (#1/0)
——240/120V——	FIBER OPTICS (SPECIFIED BY LUMA)
——4.16KV OHL——	4.16KV OVERHEAD DISTRIBUTION LINE (SIZE AS SHOWN ON DRAWINGS)
——4.16KV UGL——	4.16KV UNDERGROUND DISTRIBUTION LINE (SIZE AS SHOWN ON DRAWINGS) AS PER LUMA STD. URD-6
——38KV OHL——	NEW OVERHEAD TRANSMISSION LINE (SIZE AS SHOWN ON DRAWING)
——III——	CONVERTER UNDERGROUND DISTRIBUTION LINE (SIZE AS SHOWN ON DRAWINGS) AS PER LUMA STD. URD-6
——FO——	FIBER OPTICS (SPECIFIED BY LUMA)
	LUMINAIRE
	SINGLE POLE MOUNTED TRANSFORMER 50KVA OR AS INDICATED ON DRAWINGS
	FUSE SIZE AS SHOWN
W	EXISTING WOOD POLE TO BE DEMOLISHED
	STEEL POLE 60-S8 OR AS INDICATED ON THE DRAWINGS
	STEEL POLE WITH CONCRETE BASE AS PER SECTION 4.3.2 OF LUMA OH ELECTRICAL DISTRIBUTION SYSTEM MANUAL
PB	PRECAST CONCRETE PULL BOX 7'-0"x 4'-6"x5'-0" LUMA STANDARDS URD-30B, WITH CAST IRON FRAME AND ROUND COVER, APPENDIX -2
	RECLOSER
	CAPACITOR BANK
(E)	INDICATES EXISTING
(N)	INDICATES NEW

DEMOLITION LEGEND

SYMBOL	DESCRIPTION
——38KV OHL (E)——	EXISTING 38KV, 4W, 3PH OVERHEAD SUBTRANSMISSION LINE TO BE REMOVED
——13.2KV UGL (E)——	EXISTING 13.2KV, 4W, 3PH UNDERGROUND DISTRIBUTION LINE TO BE REMOVED
●	EXISTING WOOD POLE TO BE REMOVED (SEE DEMOLITION DWGS FOR MORE DETAILS)
○	EXISTING STEEL POLE TO BE REMOVED (SEE DEMOLITION DWGS FOR MORE DETAILS)
▫	EXISTING CONCRETE POLE TO BE REMOVED (SEE DEMOLITION DWGS FOR MORE DETAILS)

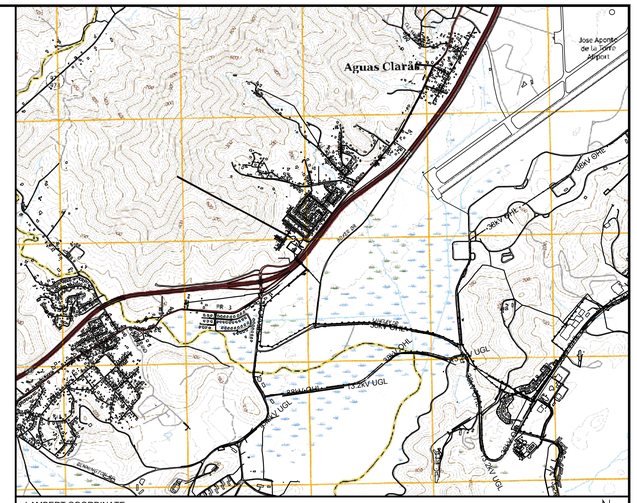

LAMBERT COORDINATE
N: 244301.49102
E: 281007.33456

LOCATION PLAN
SCALE: 1:20,000

N

OVERHEAD ELECTRICAL SUBTRANSMISSION SYSTEM STANDARDS

DOCUMENT No.	TITLE
4751.037	38KV 70S8 STD SUSPENSION-SC-VERTICAL DSST 0°-10°
4751.044	38KV 70S8 STD DEADEND-SC-VERTICAL DEADEND ASSY 0°-10°
4751.045	38KV 70S8 STD DEADEND-SC-VERTICAL DEADEND ASSY 10°-60°
4751.046	38KV 70S8 STD DEADEND-SC-VERTICAL DEADEND ASSY 60°-90°
4751.067	38KV LINE GOAB ASSEMBLY
E-1-2-3	POLE GUY INSTALLATION
F-1-3	EXPANSION ANCHOR

UNDERGROUND ELECTRICAL DISTRIBUTION SYSTEM STANDARDS

DOCUMENT No.	TITLE
URD-6	TRENCH DETAIL FOR INSTALLATION OF PRIMARY DISTRIBUTION CIRCUITS
URD-30-B	UNDERGROUND PULL BOX FOR PRIMARY CABLES 7' X 4'-6" X 5'
URD-31-B	10' X 7' X 8' MANHOLE WITH DOUBLE DOOR HATCH

WAREHOUSE ITEMS

DOCUMENT No.	TITLE
-	PRECAST CONCRETE BASE FOR GALVANIZED STEEL POLE S8 TYPE 70'

2026-691294-SRI-330056

DESIGNER'S CERTIFICATION

1. I certify that I am a licensed and registered engineer, surveyor, or architect (in compliance with Act 173 of 1988, as amended) and authorized by the project or land owner to submit these construction plans to LUMA Energy as operator and administrator of the Transmission and Distribution System of the Puerto Rico Electric Power Authority.
2. In compliance with Act No.135 of July 15, 1967, as amended known as the "Construction Plans or Projects Certification Act", I certify that I prepared the electric design for this project in accordance with the codes. Standards, rules, and regulations approved by LUMA, Puerto Rico Planning Board and Permits Management Office and the CIAPR Professional Practice Manual.

DESIGNER'S SIGNATURE

Christian Jose Lopez Mendez
Ingeniero
Licenciado
Lic 24953PE
Puerto Rico

ENDORSEMENT

LUMA

Project Name: LRA- POWER GRID IMPROVEMENT

Project Number: -

Load: (KVA): 0 KVA Revision: -

ENDORSED BY

1. LUMA endorses the electric design shown in these construction plans based on the certification presented by the designer in compliance with Act 135 of July 15, 1967, as amended.
2. LUMA does not assume responsibility over the certified design. LUMA's endorsement does not relieve the designer from the professional responsibility assumed with the certification of these project's plans. This endorsement relieves neither the builder nor private inspector from compliance with standing dispositions from: National Electric Code, National Electric Safety Code; constructions standards, norms, and regulations from LUMA and other government agencies as well as federal and state laws ruling by the time construction begins.
3. This endorsement is valid for one (1) year. If electrical works have begun during this year, with prior notification to LUMA, the endorsement will still be valid until work's completion. In case there is no certified electrical work during this period, this endorsement will lose its validity. This endorsement is not to constitute an easement or to complete the Assignment, Transfer and Guarantee process of the equipment. For this, it is necessary to comply with all the provisions of the Easements Regulation for the Puerto Rico Electric Power Authority (7282 of 2007).

CMA ARCHITECTS & ENGINEERS LLC
1509 Ave FD Roosevelt Ste 200
Guaynabo, PR 00968-2706
Tel: 787-792-1509
Fax: 787-782-0687
E-mail: cma@cmapr.com
www.cmapr.com
© 2026 CMA A&E LLC

ROOSEVELT ROADS PUERTO RICO

ELECTRICAL POWER GRID

FEMA PA DR-4339 PROJECT 95275
LOCAL REDEVELOPMENT AUTHORITY FOR ROOSEVELT ROADS
CEIBA PUERTO RICO

DATE	REVISIONS	BY
08/17/2026	1 ISSUED FOR EQUIPMENT PROCUREMENT	CLM
02/26/2026	0 60% PRELIMINARY DESIGN (ELEC)	CLM
01/30/2026	0 35% CONCEPTUAL DESIGN	CLM

Job No.	22212
SCALE	NONE
DATE	09/08/2023
DRAWN BY	CAD
CHECKED BY	CLM

GENERAL NOTES AND LOCATION PLAN
TITLE

E4-00

DATE: Monday, August 17, 2026 1:11 PM USER: Nerdys Matos Perez FILE: C:\DM WORKSPACE\22212\CHECKOUT\E4-00.DWG

OUTLET SCHEDULE

SYMBOL	DESCRIPTION	BOX	COVER AND ACCESSORY	WIRING DEVICE	PLATE	HEIGHT A.F.F.	REMARKS
	SURFACE MOUNTED LED LUMINAIRE	4-INCH SQUARE BOX	FLAT BLANK COVER	.	.	.	FLEXIBLE CONDUIT BETWEEN BOX AND LUMINAIRE
	LED LUMINAIRE WALL MOUNTES	4-INCH SQUARE BOX	FLAT BLANK COVER	.	.	.	FLEXIBLE CONDUIT BETWEEN BOX AND LUMINAIRE
	LIGHTING OUTLET FOR EXIT LIGHT WITH EXIT LT.	4-INCH SQUARE BOX	.	.	.	.	.
GFI	DUPLEX GROUNDING RECEPTACLE WITH GROUND FAULT INTERRUPT 20A, 2P, 3W, 125 VOLT TAMPER PROOF	4-INCH SQUARE BOX	FOR SINGLE DEVICE RAISED 1/2"	HUBBELL BR15	.	3'-6"	FLUSH MOUNTED
	DUPLEX GROUNDING RECEPTACLE 20A, 2P, 3W, 125 VOLT TAMPER PROOF	4-INCH SQUARE BOX	FOR SINGLE DEVICE RAISED 1/2"	HUBBELL BR15		1'-6"	FLUSH MOUNTED
	SAME AS ABOVE	DITTO	DITTO	DITTO	DITTO	3'-6"	DITTO
WP	WEATHER PROOF DUPLEX GROUNDING RECEPTACLE 20A, 2P, 3W, 125 VOLT	4-INCH SQUARE BOX	FOR SINGLE DEVICE RAISED 1/2"	HUBBELL WP 8300WTRA		1'-6"	.
	SINGLE POLE, SINGLE THROW SWITCH 20 AMP, 120 VOLT	4-INCH SQUARE BOX	FOR SINGLE DEVICE RAISED 1/2"	HUBBELL 1221-I	HUBBELL S-1	4'-0"	.
3W	SINGLE POLE SINGLE THROW 3 WAY SWITCH 20 AMP, 120 VOLTS	4-INCH SQUARE BOX	FOR SINGLE DEVICE RISER 1/2"	.	.	.	

LUMINAIRE SCHEDULE

TYPE	DESCRIPTION	LAMPS	VOLT	CEILING TYPE	MANUFACTURER	REMARKS
L1	4FT LED SURFACE MOUNTED LUMINAIRE	LED	120	.	EATON 4LBLED-LD4-6-SYMF-UNV-LD835CDI	.
L2	WALL MOUNTED LED OUTDOOR WITH PHOTOCONTROL COLOR 3500K	LED	120	.	KENALL H612FD-PP-DB-25L35K-BPC	
L3	LED FLOODLIGHT W/TOP & SIDE VISORS	TYPE: LED WATTS:128 LUMENS:16932 CCT:4000K CRI:70	UNV	SLIPFITTER	COOPER LIGHTING-LUMARK NFFLD-C40-E-UNV-66-5-CB-TS2	.
	EXIT SIGN WITH BATTERY PACK				SURE-LITE BY EATON EU-R-7-0-_-G	.

CONDUCTORS

MATERIAL		
600V		15KV
■ COPPER	SIZES ALL	■ COPPER
□ ALUMINUM	SIZES	□ ALUMINUM

INSULATION		
600V		15 kV.
THWN	UP TO NO. 8 AWG	CROSSLINKED
XHHW	NO. 6 AND LARGER	

SIZE (AWG)	
12	WHEN NOT INDICATED
12	MINIMUM

COLOR CODE		
	208Y/120V	480Y/277V
PHASE A	BLACK	BROWN
PHASE B	RED	ORANGE
PHASE C	BLUE	YELLOW
NEUTRAL	WHITE	WHITE OR GRAY
GROUND	GREEN	GREEN

ON CONDUCTOR NO. 6 AND LARGER WHEN FACTORY COLOR IS NOT AVAILABLE, CONDUCTORS SHALL BE CODED BY 1-IN WIDE BAND OF COLORED PVC TAPE, 6-IN LONG, SPIRAL WRAPPED AROUND ENDS OF EACH CONDUCTOR, WITH 1/2-IN WIDTH LAP, AND IN EACH JUNCTION BOX OR WIREWAY.

CONDUIT

SYMBOL	INSTALLED
	IN CONCRETE SLAB
	ABOVE HUNG CEILING
	UNDERFLOOR
	EXPOSED
	CONDUIT UP
	CONDUIT DOWN
	HOME RUN TO LOAD CENTER
KV UGD	UNDERGROUND RUN VOLTAGE AS INDICATED

TYPE	INSTALLED
EMT	ABOVE HUNG CEILING
PVC	UNDERGROUND
PVC	CAST CONCRETE CONSTRUCTION IN DIRECT CONTACT WITH EARTH
GRC	EXPOSED

SIZE-DIA(INCH)	
3/4"	WHEN NOT INDICATED
3/4"	MINIMUM

EQUIPMENT SCHEDULE

SYMBOL	DESCRIPTION
	PANELBOARD
	SAFETY SWITCH, 600 VOLTS, HEAVY DUTY NON-FUSIBLE, 3 POLE, SAFETY SWITCH SIZE AND NEMA TYPE AS INDICATE
	START/STOP FLUSH MOUNTED CONTROL STATION WITH PILOT LIGHT
UPS-1 UPS-2	UPS 2KVA 120V INPUT/OUTPUT (2 UNITS) SIMILAR TO VERTIV LIEBERT GXT5-2000 LVRT2UXL IN A WALL MOUNTED RACK.

STANDARD BOX

DIMENSIONS	MAXIMUM NUMBER OF CONDUCTORS			
	12	12	8	6
4" x 1-1/2" OCT.	5	5		
4" x 2-1/8" OCT.	8	7		
4" x 1-1/2" SQ.	8	7	6	
4" x 2-1/8" SQ.	12	11	9	
4-11/16" x 1-1/2"SQ.	12	10	8	
4-11/16" x 2-1/8"SQ.	17	15	13	5

CIRCUIT DESIGNATION

C1	CIRCUIT NUMBER
C1-C3	TWO CIRCUITS WITH SINGLE POLE BREAKER
C1-C3-C5	THREE CIRCUITS WITH SINGLE POLE BREAKER
C1/C3	TWO CIRCUITS WITH DOUBLE POLE BREAKER
C1/C3/C5	THREE CIRCUITS WITH THREE POLE BREAKER

SPECIALS NOTES

1. MINIMUM CONDUIT SIZE SHALL BE 3/4" UNLESS OTHERWISE NOTED.
2. CONDUIT TYPES SHALL BE AS FOLLOWS:
   a. RIGID STEEL GALVANIZED FOR EXTERIOR, WET, DAMP, HAZARDOUS LOCATIONS AND EXPOSED INSTALLATIONS.
   b. RIGID STEEL GALVANIZED PVC COATED FOR EXPOSED INSTALLATION IN AREAS WITH HIGH CORROSION ENVIRONMENT OR AS INDICATED ON DRAWINGS.
   c. ELECTRICAL METALLIC TUBING FOR DRY LOCATIONS CONCEALED IN WALLS OR ABOVE HUNG CEILINGS.
   d. PVC SCHEDULE 40 FOR UNDERGROUND INSTALLATIONS OR CONCEALED IN CONCRETE SLABS.
3. PROVIDE CONDUIT EXPANSION FITTINGS AT EVERY BUILDING CONSTRUCTION JOINT.
4. ALL CONDUIT PENETRATIONS THROUGH FIRE RATED FLOOR OR WALLS SHALL BE SEALED WITH FIRE RETARDANT SEALANT TO MAINTAIN THE INTEGRITY OF THE FIRE RATING.
5. EXPOSED CONDUIT INSTALLATIONS, CABLE TRAYS AND BUS DUCTS SHALL BE PROPERLY SUPPORTED FROM THE BUILDING STRUCTURE AT MAXIMUM SPAN INDICATED ON SPECIFICATIONS TEN FEET MAXIMUM SPAN WHEN NOT INDICATED.
6. ALL EQUIPMENT, CONDUITS, CABLE TRAYS AND BUS DUCTS SHALL BE RESTRAINED TO RESIST SEISMIC FORCES. RESTRAINTS SHALL BE DESIGNED BY A REGISTERED PROFESSIONAL ENGINEER HIRED BY THE CONTRACTOR AND SHALL MEET THE REQUIREMENTS AS DEFINED IN THE LATEST ISSUE OF THE APPLICABLE BUILDING CONSTRUCTION CODE. THE MINIMUM RESTRAINT CAPABILITY SHALL BE 0.5G HORIZONTAL AND 0.33G VERTICAL.
7. USE APPROVED CONDUIT SPACERS FOR UNDERGROUND CONDUIT BANKS. BACKFILL SHALL BE WITH SELECTED MATERIAL AND COMPACTED AS PER SPECIFICATIONS REQUIREMENTS.
8. CONDUIT EXPOSED INSTALLATION SHALL BE PERMITTED ONLY IN SERVICE AREAS LIKE MECHANICAL AND ELECTRICAL ROOMS OR AS SHOWN ON DRAWINGS.
9. THE ELECTRICAL CONTRACTOR SHALL COORDINATE THE ELECTRICAL ROUGH IN AND FINAL ELECTRICAL CONNECTION ASSOCIATED TO EQUIPMENT TO BE PROVIDED BY OTHER TRADES OR BY THE OWNER WITH THE ARCHITECT, THE GENERAL CONTRACTOR AND THE EQUIPMENT SHOP DRAWINGS. AN INSTALLATION SUBMITTAL FOR APPROVAL SHALL BE PROVIDED.
10. THE ELECTRICAL CONTRACTOR SHALL COORDINATE THE INSTALLATION OF FIRE ALARM, SOUND SYSTEM, POWER OUTLETS, COMMUNICATION AND SECURITY SYSTEM DEVICES WITH THE ARCHITECT AND THE GENERAL CONTRACTOR IN ORDER THAT THE INSTALLATION APPEARANCE SHALL BE ADEQUATE FOR THE ROOM OR AREA ENVIRONMENT. AN INSTALLATION SUBMITTAL FOR APPROVAL SHALL BE PROVIDED.
11. THE ELECTRICAL CONTRACTOR SHALL COORDINATE WITH THE ARCHITECTURAL REFLECTED CEILING PLANS PRIOR THE PROCUREMENT OF ANY INTERIOR RECESSED OR SURFACE MOUNTED LUMINAIRE IN ORDER TO PROVIDE THE CORRECT MOUNTING HARDWARE.
12. ALL THE FLUORESCENT LAMP BALLAST SHALL BE ENERGY SAVING ELECTRONIC TYPE.
13. ALL LUMINAIRES SHALL BE PROVIDED WITH THE LAMPS.
14. ALL BALLAST SHALL BE MULTI TAP TYPE.
15. WIRING DEVICES AND WALL PLATES COLOR FOR RESIDENTIAL AND HOSPITALITY PROJECTS SHALL BE COORDINATED WITH THE INTERIOR DESIGNER OR THE ARCHITECT. FOR EXACT LOCATION REFER TO THE ARCHITECTURAL OR INTERIOR DESIGNER DRAWINGS.
16. EXIT SIGNS LOCATION SHALL BE COORDINATED WITH THE ARCHITECTURAL MEANS OF EGRESS DRAWINGS.
17. NEUTRAL WIRES OF ARC FAULT OR GROUND FAULT CIRCUITS SHALL NOT BE SHARED WITH OTHER CIRCUITS.
18. THE ELECTRICAL CONTRACTOR SHALL COORDINATE THE INSTALLATION OF RACEWAYS, BUS DUCTS AND ELECTRICAL EQUIPMENT WITH THE OTHER DISCIPLINES DRAWINGS TO AVOID INTERFERENCE WITH OTHER UTILITIES, FURNITURE AND EQUIPMENT
19. ALL SPARE CONDUITS SHALL BE INSTALLED WITH FISH WIRES.
20. THE ELECTRICAL CONTRACTOR SHALL COORDINATE THE DOOR SECURITY SYSTEM DEVICES INSTALLATION WITH THE ARCHITECTURAL DOOR HARDWARE SCHEDULE.
21. ALL ELECTRICAL EQUIPMENT AND MATERIAL SHALL BE NEW UNLESS OTHERWISE NOTED.
22. FREE STANDING EQUIPMENT SHALL BE INSTALLED ON A 3 INCHES THICK MINIMUM CONCRETE PAD. COORDINATE DIMENSIONS WITH EQUIPMENT SHOP DRAWINGS.
23. THE CONTRACTOR SHALL TEST, COMMISSION AND LEAVE COMPLETELY OPERATIONALLY THE ELECTRICAL, FIRE ALARM, SECURITY, SOUND, COMMUNICATION AND RELATED SYSTEMS SPECIFIED ON DRAWINGS AND SPECIFICATIONS REQUIREMENTS.
24. FINAL CONNECTION TO PREPA ELECTRICAL SYSTEM WILL BE PERFORMED BY PREPA AT CONTRACTOR'S COST. THE CONTRACTOR SHALL PROVIDE THE REQUIRED WIRES TO PERFORM THE CONNECTION AS SHOWN ON DRAWINGS.
25. RELOCATION OR WORK ON PREPA ENERGIZED LINES SHALL BE DONE BY PREPA AT CONTRACTOR'S COST.
26. RELOCATION OR WORK ON EXISTING CABLE TV OR TELEPHONE LINES SHALL BE DONE BY THE CORRESPONDING TELECOMMUNICATION PROVIDER AT CONTRACTOR'S COST.
27. UNDERGROUND DUCT BANK INSTALLATION THROUGH EXISTING PUBLIC ROADS SHALL BE COORDINATED IN ADVANCE WITH THE CORRESPONDING MUNICIPALITY OR GOVERNMENT AGENCY.
28. RECEPTACLES IN HOMES OR GUEST ROOMS SHALL BE TAMPERPROOF.
29. WIRES SHALL BE COPPER FOR ALL INSTALLATION. ALUMINUM IS NOT ALLOWED EXCEPT FOR OVERHEAD MEDIUM VOLTAGE AND HIGH VOLTAGE LINES.
30. REFER TO THE CORRESPONDING PREPA STANDARDS MANUAL FOR THE PROCUREMENT AND INSTALLATION OF CONCRETE POLES, MANHOLES, SWITCHING UNITS, OVERHEAD LINES AND UNDERGROUND DUCT BANKS TO BE TRANSFERRED TO PREPA.
31. THE CONTRACTOR SHALL BE RESPONSIBLE TO KEEP THE EXISTING SYSTEM IN OPERATION DURING THE PROJECT CONSTRUCTION.
32. THE LOCATION OF ALL ITEMS SHOWN ON THE DRAWINGS NOT DEFINITELY FIXED BY DIMENSIONS IS APPROXIMATE ONLY, THE EXACT LOCATIONS NECESSARY TO SECURE THE BEST CONDITIONS AND RESULTS MUST BE DETERMINED BY THE CONTRACTOR AT THE PROJECT AND SHALL BE ILLUSTRATED IN THE REQUIRED SHOP DRAWINGS FOR THE ARCHITECTS APPROVAL PRIOR FINAL INSTALLATION.
33. THE SPECIFICATIONS AND DRAWINGS CALL FOR FINISHED WORK TESTED AND READY FOR OPERATION. ANY APPARATUS, MATERIAL OR WORK NOT SHOWN ON THE DRAWINGS OR SPECIFICATIONS BUT NECESSARY TO MAKE THE ELECTRICAL WORK COMPLETE AND IN COMPLIANCE WITH THE APPLICABLE CODES SHALL BE PROVIDED AND INSTALLED BY THE CONTRACTOR AS IS SPECIFICALLY CALLED FOR BY THESE CONTRACT DOCUMENTS.
34. ALL OUTDOOR POLES FIXTURES SHALL BE GROUNDED, CONTRACTOR SHALL INSTALL A COPPER WELD GROUND ROD 5/8"x8'-0" ADJACENT TO EACH POLE AND SHALL CONNECT POLE BRACKET AND ALL NON CONDUCTIVE METAL PARTS OF LUMINAIRE TO THE GROUND ROD USING A NO.8 AWG, TW, GREEN COPPER WIRE.
35. CONTRACTOR IS RESPONSIBLE TO REPAIR ALL DAMAGE TO EXISTING (ELECTRICAL, TELEPHONE, CABLE TV, WATER, SANITARY AND OTHER UTILITIES) DURING CONSTRUCTION.
36. PRIOR TO ORDER OF ELECTRONIC DIMMERS, THE CONTRACTOR SHALL VERIFY WITH THE DIMMING BALLAST MANUFACTURER THAT THE SELECTED DIMMER IS SUITABLE TO BE USED WITH THE SELECTED BALLAST AND LAMPS.

GENERAL STRUCTURAL NOTES FOR ELECTRICAL COMPONENTS

1. THE FOLLOWING NOTES APPLY TO ALL DRAWINGS, UNLESS OTHERWISE NOTED (IF EXISTS, THE MOST STRINGENT BETWEEN THE STRUCTURAL DRAWINGS GENERAL NOTES/DETAILS AND THESE NOTES SHALL TAKE PRECEDENCE)
2. BEFORE AND DURING CONSTRUCTION, THE CONTRACTOR SHALL CHECK THE ARCHITECTURAL, MECHANICAL, ELECTRICAL, EQUIPMENT AND ALL PROJECT RELATED DRAWINGS TO COORDINATE DIMENSIONS, PLACING OF SLEEVES, INSERTS, OPENINGS, ANCHORAGES, ETC.
3. THE CONTRACTOR SHALL VERIFY AND BE RESPONSIBLE FOR ALL DIMENSIONS AND CONDITIONS AT THE SITE AND SHALL NOTIFY THE ELECTRICAL/STRUCTURAL ENGINEER OF DISCREPANCIES BETWEEN THE ACTUAL CONDITIONS AND INFORMATION SHOWN ON THE DRAWINGS BEFORE PROCEEDING WITH THE WORK.
4. THE CONTRACTOR SHALL IMMEDIATELY NOTIFY THE ELECTRICAL/STRUCTURAL ENGINEER OR OWNERS REPRESENTATIVE OF ANY CONDITION WHICH, IN HIS/HER OPINION, MIGHT ENDANGER THE STABILITY OF THE EQUIPMENT OR SUPPORTING STRUCTURE OR CAUSE ANY DISTRESS.
5. SPECIFIC NOTES & DETAILS SHALL TAKE PRECEDENCE OVER THESE NOTES & TYPICAL DETAILS.
6. THE CONTRACTOR SHALL REFER TO THE SPECIFICATIONS FOR INFORMATION NOT COVERED BY THE NOTES OR THE DRAWINGS.
7. THE CONTRACTOR SHALL PROVIDE TEMPORARY ERECTION BRACING & SHORING FOR ALL EQUIPMENTS AND COMPONENTS OR AS REQUIRED FOR THEIR STRUCTURAL STABILITY DURING ALL PHASES OF CONSTRUCTION.
8. NOT ALL NOTES INCLUDED HEREIN ARE PART OF THE ORIGINAL SCOPE OF WORK BUT SHALL BE USED IN THE EVENT OF CHANGES OF ANY ADDITIONAL WORK REQUIRED.
9. THE PROJECT OWNER IS RESPONSIBLE TO REQUEST AND OBTAIN, PRIOR TO THE PROJECT BEGINNING DATE, ALL ENDORSEMENTS, PERMITS AND EASEMENTS REQUIRED BY STATE, MUNICIPAL, FEDERAL GOVERNMENTAL AND PRIVATE ENTITIES RELATED TO THE PROPOSED TYPE OF PROJECT.
10. THE OWNER OF THIS WORK SHALL CONTRACT THE SERVICES OF A CIAPR MEMBER AND LICENSED PROFESSIONAL ENGINEER TO INSPECT THE ELECTRICAL CONSTRUCTION WORKS ACCORDING TO LAW NO.7 OF JULY 19, 1985, AS AMENDED, AND WITH THE CURRENT EDITION OF THE "REGLAMENTO DE CERTIFICACION DE PLANOS DE PROYECTOS DE CONSTRUCCION ELECTRICA" OF LUMA. THE OWNER SHALL NOTIFY TO LUMA THE NAME OF THE ASSIGNED PRIVATE INSPECTOR PRIOR TO THE BEGINNING OF THE PROJECT.
11. THE EXECUTION OF THE ELECTRICAL WORKS, AS DESIGNED ON THESE DRAWINGS, SHALL FOLLOW THE BEST ELECTRICAL INDUSTRY AND CONSTRUCTION PRACTICES ACCORDING TO THE NORMS AND REGULATIONS ADOPTED BY LUMA AND THE CONCERNING AGENCIES, AS WELL AS WITH THE CODES, NEC, NESC AND ADDITIONAL ADOPTED STANDARDS OF THE IEEE, NFPA, NEMA AND ANSI.
12. THE CONTRACTOR IS NOT AUTHORIZED TO MAKE VARIATIONS TO THIS DESIGN. IT IS THE CONTRACTOR'S RESPONSIBILITY TO CONSULT THE DESIGNER OR THE DESIGNATED INSPECTOR FOR THIS WORK ABOUT ANY DOUBT THAT MAY ARISE FROM THE INTERPRETATION OF DRAWINGS, ABOUT THE EXECUTION OF THE PROPOSED WORKS, TECHNICAL SPECIFICATIONS OR DISCREPANCIES BETWEEN THE EXISTING FIELD CONDITIONS AND THOSE CONSIDERED FOR DESIGN PURPOSES.
13. THE OWNER OR THE ELECTRICAL CONTRACTOR SHALL NOTIFY TO LUMA THE DATE FOR THE BEGINNING OF THESE WORKS BY SUBMITTING TO THE ENGINEERING DEPARTMENT OF THE CORRESPONDING REGION THE "NOTIFICACION DE COMIENZO DE PROYECTO" DOCUMENT, AT LEAST FIFTEEN DAYS PRIOR TO THE PROPOSED DATE.
14. THE PRIVATE INSPECTOR AND THE ELECTRICAL CONTRACTOR ARE RESPONSIBLE OF ATTENDING A PRE-CONSTRUCTION MEETING TO BE COORDINATED WITH THE UTILITY'S ELECTRICAL DISTRIBUTION ENGINEERING DEPARTMENT OF THE CORRESPONDING REGION.
15. ALL WORK ON ENERGIZED LINES, INCLUDING THE UTILITY GRID CONNECTION OF THIS PROJECT, SHALL BE DONE BY LUMA. THE PROPOSER IS RESPONSIBLE FOR ALL EQUIPMENT COSTS, MATERIALS AND LABOR. THE PROPOSER SHALL REQUEST A COST ESTIMATE TO LUMA FOR THESE WORKS. THE COST ESTIMATE WILL BE VALID FOR THREE MONTHS FROM THE ISSUED DATE.
16. ANY WORK WITHIN LUMA ELECTRICAL EASEMENT LIMITS WITHOUT THE WRITTEN AUTHORIZATION OF LUMA IS PROHIBITED.
17. LUMA WILL NOT APPROVE THE UTILITY GRID CONNECTION OF PROJECTS WITH INVASION OF EASEMENT CONDITIONS OR THAT ARE NOT IN COMPLIANCE WITH THE REQUIRED SAFETY CLEARANCES.

REFERENCE

1. THE FOLLOWING DOCUMENTS, THEIR COMMENTARIES AND THE STANDARDS REFERENCED THEREIN, SHALL APPLY TO DESIGN, FABRICATION AND CONSTRUCTION PRACTICES TO BE ADHERED TO WITH TO WITH REGARD TO THE WORK SHOWN ON THE DRAWINGS: (IF EXISTS, STRUCTURAL DRAWINGS SHALL TAKE PRECEDENCE)

A) STRUCTURAL STEEL
   1) AISC MANUAL OF STEEL CONSTRUCTION
   2) AISC MANUAL OF STEEL CONSTRUCTION, VOL. II CONNECTIONS
   3) AWS STRUCTURAL WELDING CODE

B) CODES AND DESIGN STANDARDS FOR CONCRETE COMPONENTS
   1) STANDARD SPECIFICATIONS FOR STRUCTURAL CONCRETE, (ACI 301-05).
   2) BUILDING CODE REQUIREMENTS FOR STRUCTURAL CONCRETE (ACI 318-14) AND COMMENTARY (ACI 318R-14).
   3) 2018 PUERTO RICO BUILDING CODE, PRBC 2018
   4) 2018 INTERNATIONAL BUILDING CODE, IBC 2018
   5) MINIMUM DESIGN LOADS FOR BUILDINGS AND OTHER STRUCTURES (ASCE 7-16)

MATERIALS

GENERAL STRUCTURAL NOTES FOR ELECTRICAL COMPONENTS

1. THE FOLLOWING SPECIFICATIONS APPLY TO THE STRUCTURAL STEEL WORK:

   A) STEEL SHAPES ASTM A992/572, FY=50 KS
   B) STEEL PLATES, ANGLES AND BARS. ASTM A-36
   C) TUBULAR SECTIONS, GRADE B ASTM A-500
   D) STEEL PIPE - FOR STRUCTURAL USE ONLY ASTM A-53 TYPE E OR S
   E) HIGH STRENGTH BOLTS ASTM A-325
   G) THREADED RODS EXPOSED TO WEATHER SHALL BE HOT DIP GALVANIZED ASTM A36
   H) ANCHOR RODS ASTM A-449
   I) WELD FILLER MATERIAL, E70XX ELECTRODES
   J) EXPANSION ANCHORS HILTI 500 RE KWIK BOLT 3 BY HILTI ZINC COATED OR SS AS REQ'D)
   K) EPOXY FOR EMBEDMENT FOR CONCRETE - HVA ADHESIVE SYSTEM FOR MASONRY - HIT HY20 SYSTEM

STRUCTURAL STEEL:

1. UNLESS OTHERWISE NOTED, THE FOLLOWING MINIMUMS SHALL APPLY:

   A) WELD SIZE 1/4" (ALL AROUND)
   B) BOLT DIAMETER 5/8"
   C) PLATE THICKNESS 1/4" OR 3/8" EXPOSED WEATHER
   D) CLIP ANGLE THICKNESS 1/4" OR 5/16" EXPOSED WEATHER

2.ONE BOLT ASSEMBLY SHALL CONSIST OF:

   A) A HEAVY HEX STRUCTURAL BOLT
   B) A HEAVY HEX NUT
   A HARDENED STEEL WASHER

3. ALL WELDING SHALL BE PERFORMED BY CERTIFIED WELDERS USING THE ELECTRIC ARC PROCESS IN ACCORDANCE WITH APPLICABLE PORTIONS OF THE "CODE FOR ARC AND GAS WELDING IN BUILDING CONSTRUCTION OF THE AMERICAN WELDING SOCIETY".
4. ALL WELDS AND BURNED AREAS SHALL BE CLEANED, PREPARED AND PRIMED AND PAINTED WITH ZINC RICH PRODUCTS.
5. SHOP DRAWINGS SHALL BE SUBMITTED TO THE ENGINEER FOR APPROVAL PRIOR FABRICATION OF ANY ELEMENT.

NOTES

GRAVITY SUPPORT, SEISMIC AND WIND RESTRAINT REQUIREMENTS FOR ALL ELECTRICAL COMPONENTS

CONTRACTORS SHALL PROVIDE, FACILITATE AND COORDINATE WITH ALL OTHER CONTRACTORS AND SUBCONTRACTORS INVOLVED IN THE PROJECT, THE GRAVITY SUPPORT AND THE WIND AND SEISMIC RESTRAINTS TO ALL MECHANICAL, ELECTRICAL, ALL ANCILLARY EQUIPMENT, ASSOCIATED DUCTWORK AND PIPING. ALL SUPPORTING BASES, VIBRATION ISOLATORS AND SPRINGS, AND SUPPORTING STRUCTURES NOT CONSTRUCTED AS PER THE CMA DRAWINGS AND ALL THE ATTACHMENTS ASSEMBLIES, SHALL MEET WIND AND SEISMIC REQUIREMENTS.

GRAVITY, SEISMIC AND WIND EVALUATION AND DESIGN SHALL BE PERFORMED IN ACCORDANCE WITH THE 2018 PUERTO RICO BUILDING CODE AND ITS REFERENCED CODES, INTERNATIONAL BUILDING CODE (IBC 2018) AND ASCE 7-16 MINIMUM DESIGN LOADS FOR BUILDINGS AND OTHER STRUCTURES AND THE SEISMIC RESTRAINT MANUAL: GUIDELINES FOR MECHANICAL SYSTEMS, 2008 EDITION, ANSI/SMACNA. THE EQUIPMENTS REQUIRING SEISMIC RESTRAINT SHALL NOT BE LIMITED TO THOSE LISTED IN SECTION 13.6 AND TABLE 13.6-1 IN PAGE 149 OF THE ASCE 7-16.

THE SEISMIC DEMAND AND WIND FORCES SHALL BE CALCULATED USING THE APPLICABLE VALUES AS PER THE PROJECT SPECIFICATIONS BUT NOT LESS THAN THE FOLLOWING:

A) ATEIMPORTANCE FACTOR, Ip = 1.50, FOR ALL EQUIPMENT SERVING LIFE SAFETY PURPOSES AS DEFINED BY THE APPLICABLE CODES. FOR ALL OTHER CASES AS PER THE PROJECT SPECIFICATIONS.

B) Wp = WEIGHT AS PER MANUFACTURER SPECIFICATIONS AT OPERATIONAL LEVEL OR PASSIVE LEVEL, WHICHEVER IS MORE STRINGENT

C) SEISMIC DESIGN CATEGORY = D, OR AS PER THE SPECIFICATIONS OR THE GEOTECHNICAL INVESTIGATION REPORT, WHICHEVER IS MORE STRINGENT.

D) DESIGN WIND VELOCITY, V = 175 MPH OR AS PER THE SPECIFICATIONS, WHICHEVER IS MORE STRINGENT.

ALL NEW EQUIPMENT INSTALLED IN THE PROJECT SHALL BE CERTIFIED TO MEET AND CONFORM ALL SEISMIC AND WIND REQUIREMENTS IN TERMS OF STRENGTH, STIFFNESS, SERVICEABILITY AND OPERATIONAL SEISMIC CRITERIA ALL AS PER THE OWNER'S REQUIREMENTS OR APPLICABLE CODES OR SPECIFICATIONS, WHICHEVER RESULTS IN THE MOST STRINGENT CRITERIA.

FOR THOSE COMPONENTS NOT SHOWING GRAVITY SUPPORT ON THE DRAWINGS, THE CONTRACTOR SHALL NOTIFY THE OWNERS REPRESENTATIVE AND TO THE ENGINEER OF RECORD PRIOR TO THE END OF THE PRICING/BIDDING PROCESS. ANY SUPPORT INSTALLATION OR CONSTRUCTION SHALL BE DONE AS PER THE DETAILS APPROVED BY THE STRUCTURAL/MECHANICAL ENGINEER OF RECORD (SEE GENERAL STRUCTURAL NOTES FOR MECHANICAL/ELECTRICAL COMPONENTS)

CONTRACTOR SHALL ACCOUNT FOR THE COST OF ALL REQUIRED SUPPORTS AND RESTRAINTS REQUIRED AND SHALL SUBMIT THE REQUIRED DOCUMENTED SEISMIC AND WIND EVALUATION AND DESIGN CALCULATIONS TO THE ENGINEER OF RECORD FOR THE EVALUATION AND APPROVAL PRIOR TO CONSTRUCTION, THE SUBMITTAL SHALL BE PERFORMED, STAMPED, SIGNED AND CERTIFIED BY A PUERTO RICO REGISTERED ENGINEER WHO SHALL BE QUALIFIED IN THE MATTER. DESIGN ERRORS AND OMISSIONS INSURANCE CERTIFICATE MUST ACCOMPANY ALL SUBMITTALS. MANUFACTURERS PRODUCT LIABILITY INSURANCE CERTIFICATES ARE NOT ACCEPTABLE FOR THIS PURPOSE.

GENERAL STRUCTURAL NOTES FOR ELECTRICAL COMPONENTS (CONT.)

SUBMITTALS:

1. DRAWINGS FOR ANY PROPRIETARY SYSTEM SPECIFIED FOR THE PROJECT AND THEIR SUPPORTING DESIGN CALCULATIONS SHALL BE PERFORMED, SIGNED & SEALED BY A QUALIFIED PUERTO RICO REGISTERED PROFESSIONAL ENGINEER.
2. THAT DOCUMENTATION SHALL INCLUDE ALL SERVICE AND STRENGTH LEVEL REACTIONS (MUST BE CLEARLY SPECIFIED) REQUIRED FOR THE DESIGN OF THE SYSTEM. IN THOSE CASES WHERE THE EQUIPMENT DOES NOT INCLUDE A DETAILED DESIGN DOCUMENTATION, A CERTIFICATION MUST BE INCLUDED BY THE QUALIFIED PROFESSIONAL ENGINEER AND MANUFACTURER THAT ALL THE PUERTO RICO CODE WIND AND SEISMIC REQUIREMENTS ARE MET OR EXCEEDED.
3. FOR ALL EQUIPMENTS SUPPORTED BY THE STRUCTURAL SYSTEM OR FOUNDATION, REACTIONS MUST INCLUDE ALL SHORT TERM, LONG TERM AND INCIDENTAL SPECIAL LOADS AND VIBRATIONS. THIS INFORMATION SHALL BE GENERATED BY MANUFACTURER OF BY A QUALIFIED SPECIALIST RESPONSIBLE FOR THE INFORMATION.
4. NO STRUCTURAL COMPONENT OR ANY SYSTEM SUPPORT, ATTACHMENT OR RESTRAINER SHALL BE CUT OR REMOVED UNLESS OTHERWISE NOTED WITH SPECIFIC INSTRUCTIONS. SHOP DRAWINGS MUST SHOW ALL CUTS AND REMOVAL IDENTIFIED AS SUCH.
5. ANY DEVIATION OR SUGGESTED DEVIATION FROM CONSTRUCTION DOCUMENTS SHALL BE SPECIFICALLY IDENTIFIED IN THE SUBMITTAL OR SHOP DRAWINGS WITH A CLOUD OR NOTICEABLE LABEL ASKING FOR APPROVAL FROM THE ENGINEER OF RECORD. CHANGES OR DEVIATIONS NOT CLEARLY IDENTIFIED AND LABELED THUS, MIGHT NOT BE CAPTURED BY THE REVIEWER. IN SUCH CASE, CONTRACTOR WILL BE RESPONSIBLE OF THE IMPLICATIONS OF SUCH CHANGE. NO CHANGE WITHOUT SPECIFIC APPROVAL FROM THE ENGINEER OF RECORD SHALL BE IMPLEMENTED OR CONSTRUCTED. EVERY SUBMITTAL RECEIVED FOR EVALUATION SHALL CLEARLY STATE IF ITS APPROVAL IMPLIES A CHANGE IN COST TO THE PROJECT. ANY APPROVAL OTHERWISE WILL BE IF GIVEN, ON THE BASIS THAT NO CHANGE IN COST IS IMPLIED.
6. THE SUBMITTAL DOCUMENT SHALL INCLUDED A STATEMENT DISCLOSING THE VERSION OR THE DRAWINGS USED FOR THEIR DEVELOPMENT. THIS SHALL BE INCLUDED IN EVERY REVISION OF THE SHOP DRAWING. THEREFORE, THE CONTRACTOR SHALL ENSURE THAT THE DEVELOPMENT OF THE SUBMITTAL IS BASED ON THE LATEST DESIGN DRAWINGS. SUBMITTALS NOT INCLUDING SUCH REFERENCE WILL NOT BE REVIEWED AND RETURNED TO THE CONTRACTOR.

REQUESTS FOR INFORMATION (RFI)

1. ALL RFI DOCUMENTS SHALL ULTIMATELY BE FORMALLY SUBMITTED IN WRITTING TO THE OWNER AND TO THE ENGINEER OF RECORD (EOR). NO IMPLEMENTATION SHALL BE PERFORMED WITHOUT THE WRITTEN APPROVAL OF AN RFI DOCUMENT BY THE E.O.R.
2. CONTRACTOR SHALL ENSURE THAT ANY CONFLICTING OR MISSING INFORMATION IN THE CONSTRUCTION DOCUMENTS ARE CLARIFIED BY THE EOR PRIOR TO ITS IMPLEMENTATION BY MEANS OF AN RFI DOCUMENT SUBMITTED TO THE E.O.R. FOR SUCH PURPOSE.
3. EVERY RFI SENT FOR EVALUATION SHALL CLEARLY STATE IF ITS APPROVAL IMPLIES A CHANGE IN COST TO THE PROJECT. ANY APPROVAL OTHERWISE WILL BE IF GIVEN ON THE BASIS THAT NO CHANGE IN COST IS IMPLIED.

Christian Jose Lopez Mendez
Ingeniero
Licenciado
Lic. 24953PE
Puerto Rico

CMA ARCHITECTS & ENGINEERS LLC
1509 Ave FD Roosevelt Ste 200
Guaynabo, PR 00968-2706
Tel: 787-792-1509
Fax: 787-782-0687
E-mail: cma@cmapr.com
www.cmapr.com
© 2026 CMA A&E LLC

ROOSEVELT ROADS PUERTO RICO

ELECTRICAL POWER GRID

FEMA PA DR-4339 PROJECT 95275
LOCAL REDEVELOPMENT AUTHORITY FOR ROOSEVELT ROADS
CEIBA PUERTO RICO

DATE	REVISIONS	BY
08/17/2026	1 ISSUED FOR EQUIPMENT PRO

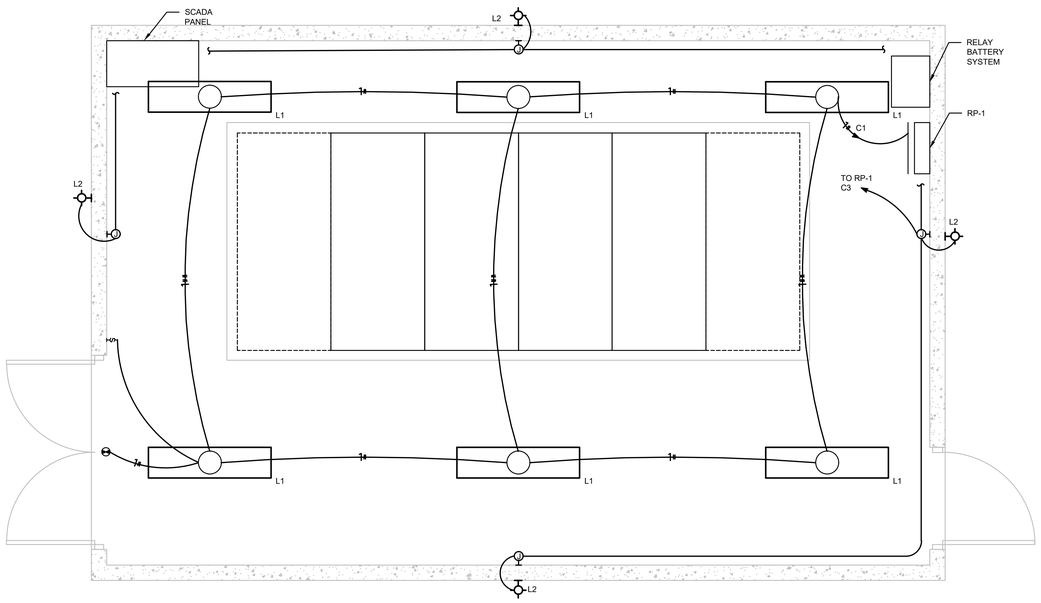

TYPICAL POWER HOUSE LIGHTING PLAN
SCALE: 1/2"=1'-0"

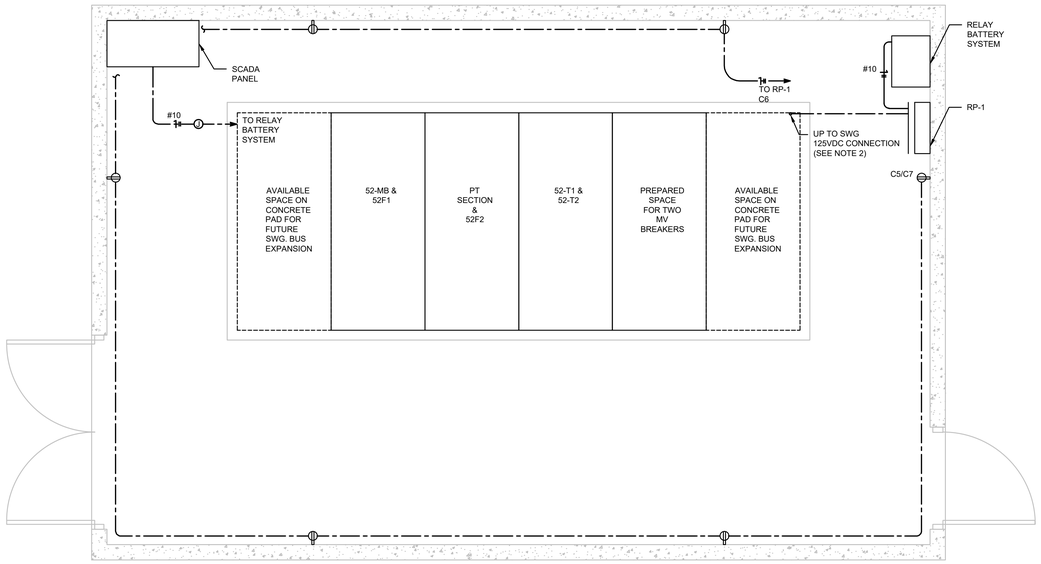

TYPICAL POWER HOUSE PLAN
SCALE: 1/2"=1'-0"

Christian Jose Lopez Mendez
Ingeniero
Licenciado
Lic. 24953PE
Puerto Rico

2026-691294-SRI-330056

DESIGNER'S CERTIFICATION

1. I certify that I am a licensed and registered engineer, surveyor, or architect (in compliance with Act 173 of 1988, as amended) and authorized by the project or land owner to submit these construction plans to LUMA Energy as operator and administrator of the Transmission and Distribution System of the Puerto Rico Electric Power Authority.
2. In compliance with Act No.135 of July 15, 1967, as amended known as the "Construction Plans or Projects Certification Act", I certify that I prepared the electric design for this project in accordance with the codes. Standards, rules, and regulations approved by LUMA, Puerto Rico Planning Board and Permits Management Office and the CIAPR Professional Practice Manual.

DESIGNER'S SIGNATURE

NOTES

1. ALL UNDERGROUND CONDUITS RUN 24" BELOW FINISH GRADE. PROVIDE WARNING RIBBON AT 12" BELOW GRADE.
2. CONTRACTOR SHALL VERIFY POINT OF CONNECTION WITH SWITCHGEAR SHOP DRAWING.

1' 6" 0 1' 2' 4'
SCALE: 1/2"=1'

ENDORSEMENT

LUMA

Project Name: LRA- POWER GRID IMPROVEMENT
Project Number: -
Load: (kVA): 0 KVA Revision: -

ENDORSED BY

1. LUMA endorses the electric design shown in these construction plans based on the certification presented by the designer in compliance with Act 135 of July 15, 1967, as amended.
2. LUMA does not assume responsibility over the certified design. LUMA's endorsement does not relieve the designer from the professional responsibility assumed with the certification of these project's plans. This endorsement relieves neither the builder nor private inspector from compliance with standing dispositions from: National Electric Code, National Electric Safety Code; constructions standards, norms, and regulations from LUMA and other government agencies as well as federal and state laws ruling by the time construction begins.
3. This endorsement is valid for one (1) year. If electrical works have begun during this year, with prior notification to LUMA, the endorsement will still be valid until work's completion. In case there is no certified electrical work during this period, this endorsement will lose its validity. This endorsement is not to constitute an easement or to complete the Assignment, Transfer and Guarantee process of the equipment. For this, it is necessary to comply with all the provisions of the Easements Regulation for the Puerto Rico Electric Power Authority (7282 of 2007).

CMA ARCHITECTS & ENGINEERS LLC
1509 Ave FD Roosevelt Ste 200
Guaynabo, PR 00968-2706
Tel: 787-792-1509
Fax: 787-782-0687
E-mail: cma@cmapr.com
www.cmapr.com
© 2026 CMA A&E LLC

ROOSEVELT ROADS PUERTO RICO

ELECTRICAL POWER GRID
FEMA PA DR-4339 PROJECT 95275
LOCAL REDEVELOPMENT AUTHORITY FOR ROOSEVELT ROADS
CEIBA PUERTO RICO

DATE	REVISIONS	BY
08/17/2026	1 ISSUED FOR EQUIPMENT PROCUREMENT	CLM
02/26/2026	1 60% PRELIMINARY DESIGN (ELEC)	CLM

Job No.	22212
SCALE	1/2"=1'-0"
DATE	02/26/2026
DRAWN BY	CAD
CHECKED BY	CLM

SWITCHGEAR ROOM ELECTRICAL PLAN (TITLE)

E6-01

DATE: Monday, August 17, 2026 1:11 PM USER: Nerdys Matos Perez FILE: C:\DM WORKSPACE\22212\CHECKOUTE6-01.DWG