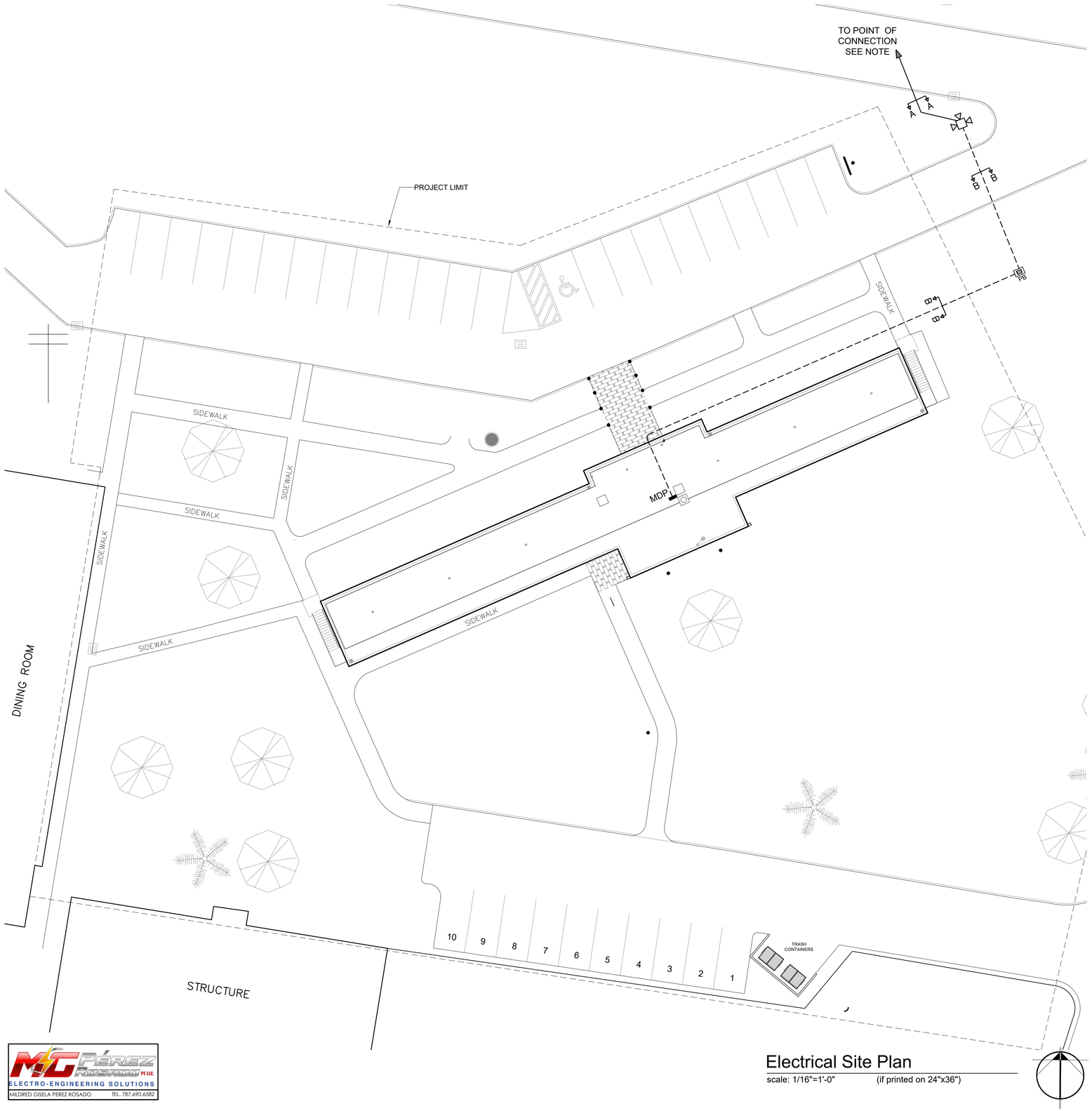


Electrical Site Plan

scale: 1/16"=1'-0" (if printed on 24"x36")

LEGEND:

112.5 KVA SUBSTATION – 3@37.5KVA
THREE PHASE, OIL INMERSED, NON–PCB" DELTA PRIMARY AND 208/120V A.C. S/N WYE SECONDARY
SERVICE WITH 4–2 1/2 ø
FULL CAPACITY VOLTAGE
TAPS, TWO ABOVE AND
TWO BELOW PRIMARY
VOLTAGE. MAX LOSSES
PERMITED AS PER P.R.E.P.A
LETTER 15–03
PRIVATE SUBSTATION

* PRIOR CONSTRUCTION THE CONTRACTOR SHALL VERIFY WITH ARMY NATIONAL GUARD REPRESENTATIVE THE PRIMARY VOLTAGE FOR THE TRANSFORMERS

UNDERGROUND SECONDARY LINE CONSISTING OF 4#500 MCM RHW–2 & 1#2 AWG IN 4" PVC SCHD.40 & 4" PVC SCHD. 40 SPARE

PB SECONDARY PULL BOX URD–30 AS PER NATIONAL GUARD SEE DETAIL –1

NOTE: THE CONTRACTOR SHALL COORDINATE WITH THE ARMY NATIONAL GUARD REPRESENTATIVE, THE LOCATION OF THE CONNECTION POINT AND SHALL INSTALL THE UNDERGROUND FEEDER FROM THIS POINT TO NEW POLE AS INDICATED.

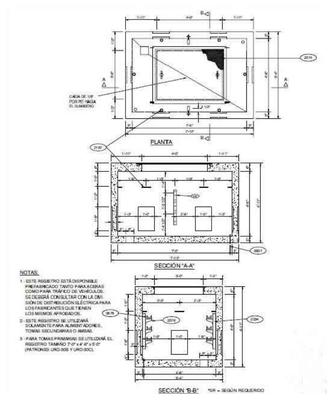


DETAIL –1
PREPA STD. URD–30
N.T.S. FOR REFERENCE ONLY

CODE COMPLIANCE: THIS PROJECT HAS BEEN DESIGNED IN ACCORDANCE WITH THE PUERTO RICO EXISTING BUILDING CODE 2018 EDITION. CONTRACTORS ARE NOT ALLOWED TO MAKE CHANGES TO THIS PROJECT WITHOUT WRITTEN AUTHORIZATION OF THE ARCHITECT OF RECORD.

MG PÉREZ ROSADO PE LLC.
ELECTRO-ENGINEERING SOLUTIONS
MILDRED GISELA PEREZ ROSADO TEL. 787.690.6582

Yo, Mildred Gisela Perez Rosado, Ingeniera licenciada con el número 32,621, certifico que personalmente diseñé estos planos y las especificaciones correspondientes, y que los mismos cumplen con lo que dichos planos y especificaciones cumplen con todos los requisitos aplicables del Reglamento Conjunto y las disposiciones aplicables de los Reglamentos y Códigos de Construcción Vigentes de Corporaciones Públicas con jurisdicción. Certifico, además, que he revisado personalmente los planos y especificaciones se ha cumplido cabalmente con lo dispuesto en la Ley Núm. 45 de 18 de abril de 1935, según enmendada, conocida como la "Ley para la Inversión por la Industria Puertorriqueña" y con la Ley Núm. 84 de 18 de junio de 1976, según enmendada, Ley Núm. 96 de 6 de julio de 1978, según enmendada, y cualquier otra ley aplicable sobre cualquier declaración falsa o falsificación de los hechos materiales aquí contenidos, ya sea por mí, por mis agentes o por ingenieros a mi cargo, o por otras personas con mi conocimiento y consentimiento, está sujeta a cualquier acción judicial y disciplinaria por la OCPR.

CERTIFIED:

arquiteg
ARQUITECTOS
INGENIEROS
PLANIFICADORES

CONSTRUCTION AND FACILITIES MANAGEMENT OFFICE

PUERTO RICO ARMY NATIONAL GUARD
#552 BORINQUEN TRAIL, FORT BUCHANAN, PUERTO RICO 00934

PROJECT:
RESTORATION REPAIR OF BUILDING 149, FATC | P/N: 432122
FORT ALLEN TRAINING CENTER, JUANA DIAZ, PUERTO RICO

| NO. | DESCRIPTION | DATE |
|---|---|---|
| | REVISIONS | |

100% BIDDING SET
NOT FOR CONSTRUCTION
BY: V.M.V. DATE: NOV 04, 2024

DESIGN: MILDRED GISELA PEREZ

SUPERVISOR: MILDRED GISELA PEREZ

SHEET NUMBER: ES-01

SHEET TITLE: ELECTRICAL SITE PLAN

SHEET: TOTAL SHEETS: OF

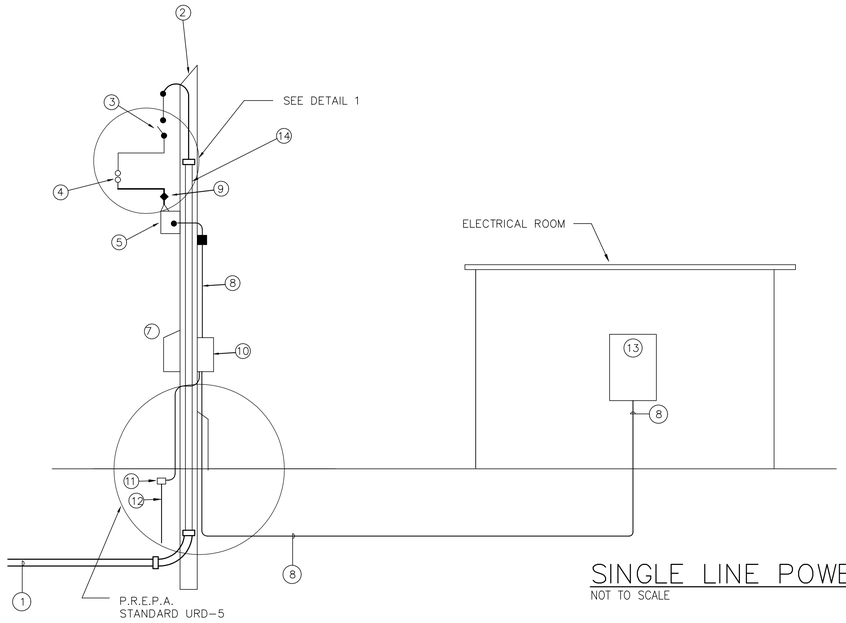


## SINGLE LINE POWER RISER DIAGRAM

NOT TO SCALE

## ONE LINE DESCRIPTION:

1. UNDERGROUND PRIMARY FEEDER CONSISTING OF 3–NO. 2 AWG–15KV, COPPER, TRXLP, SHIELDED AND PVC JACKETED AND 1 NO. 2 THW COPPER GROUND WIRE IN 4" PVC SCH 40 CONDUIT TO BE BURIED 48" BELOW FINISHED GRADE.
2. NEW 45 FT.– H6 CONCRETE SELF SUPPORT POLE PER PREPA SPECIFICATIONS. URD–3A, URD 4, M16–1,2,3,4
3. 3–200A–125 KV BIL CUT OUTS 15 KV WITH 8E FUSELINK.
4. 3–LIGHTNING ARRESTERS 10 KV. OUTDOOR OR INDOOR TYPE (AS APPLICABLE) M.O.V. SHALL COMPLY WITH COMUNICADO 16–02
5. POLE MOUNTED THREE PHASE TRANSFORMER BANK 112.5 KVA TOTAL CONSISTING OF 3–37.5 KVA, NON PCB, OIL FILLED DISTRIBUTION TYPE TRANSFORMERS, STAINLESS STEEL, SELF COOLED, WITH FOUR TAPS 2–2 1/2% TAPS BELOW RATED VOLTAGE AND TWO 2–2 1/2% ABOVE RATED VOLTAGE. TRANSFORMERS MUST MEET ALL PREPA STANDARDS. SEE NATIONAL GUARD STANDARD T–5.
6. OZ CONDUIT TERMINATOR PIPE SEALINE BUSHING SIZE AS REQUIRED PREPA APPROVED.
7. STAINLESS STEEL PRIMARY METERING CABINET AS PER NATIONAL GUARD REQUIREMENTS.
8. UNDERGROUND SECONDARY FEEDER CONSISTING OF 4–#500 MCM RHW–2 600 VOLTS, STRANDED COPPER, AND 1#2 THHN 600 VOLTS, STRANDED COPPER GROUND WIRE. IN A 4" PVC WITH ONE SAME SIZE SPARE ENCASED IN CONCRETE (3" MIN. COVER ALL AROUND X 3") BURIED 36" BELOW FINISH GRADE. USE RIGID GALVANIZED STEEL, (RGS), PVC COATED WHEN FEEDER IS INSTALLED EXPOSED.
9. STRESS RELIEF CONES, 15KV, INDOOR OR OUTDOOR TYPE APPLICABLE.
10. NEMA 4X STAINLESS STEEL ENCLOSURE WITH ONE 600 AMPS, 3 POLE WITH 400A MAIN BREAKER, 600V., BOLT–ON, INDUSTRIAL TYPE.
11. THERMOWELD OR COMPRESSION TYPE CONNECTION. NO SCREW CONNECTORS ARE PERMITTED.
12. COPPER CLAD GROUND ROD – 3/4"x 10'–0"
13. NEW MDP

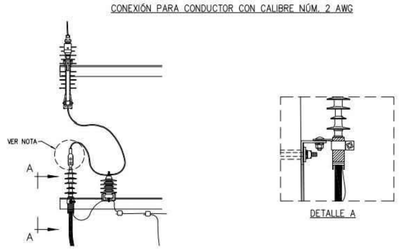


## DETAIL 1

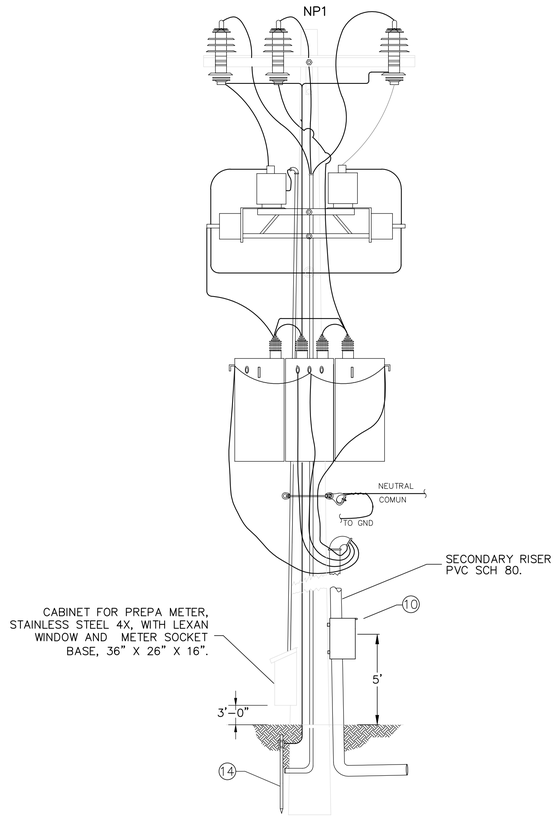


## PREPA STD. T–5

N.T.S. FOR REFERENCE ONLY

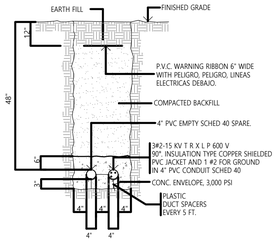


## SECTION A-A

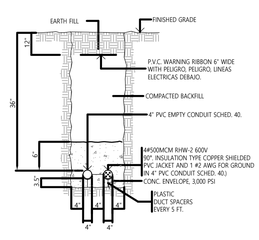


## SECTION B-B

Yo, Mildred Gisela Perez Rosado, Ingeniera licenciada num. 31352, certifico que los planos que aquí se detallan fueron preparados bajo mi supervisión y dirección y cumplen con las disposiciones aplicables del Reglamento Conjunto de Permisos y Reglamentos Vigentes de Puerto Rico y demás reglamentos estatales y federales aplicables. Además, certifico que estos planos y especificaciones cumplen con las disposiciones aplicables del Reglamento para la Contratación de Obras y Mejoras de Capital y Compras Públicas con jurisdicción. Certifico, además, que en la preparación de estos planos y especificaciones se cumplió con la política pública dispuesta en la Ley Núm. 14 de 8 de enero de 2004, según enmendada, según aplicó. Asimismo, que en la preparación de estos planos y especificaciones se cumplió con la Ley Núm. 45 de 18 de abril de 1935, según enmendada, según aplicó. Reconozco que cualquier información falsa aquí incluida, así como cualquier hecho que se haya producido por desconocimiento o por error, podrá ser corregido a requerimiento de empleados, o por otras personas con mi consentimiento. Reconozco, además, que puedo estar sujeto a acción judicial y disciplinaria por la OGPe.

CERTIFIED:

arquiteg
ARQUITECTOS
INGENIEROS
PLANIFICADORES

CONSTRUCTION AND FACILITIES MANAGEMENT OFFICE

PUERTO RICO ARMY NATIONAL GUARD
#552 BORINQUENEER TRAIL, FORT BUCHANAN, PUERTO RICO 00934

PROJECT:
RESTORATION REPAIR OF BUILDING 149, FATC I P/N: 432122
FORT ALLEN TRAINING CENTER, JUANA DIAZ, PUERTO RICO

| NO. | DESCRIPTION | DATE |
|---|---|---|
| 1 | | |

REVISIONS

| NO. | DESCRIPTION | DATE |
|---|---|---|

100% BIDDING SET
NOT FOR CONSTRUCTION
BY: V.M.V. DATE: NOV 04, 2024

DESIGN: MILDRED GISELA PEREZ

SUPERVISOR: MILDRED GISELA PEREZ

SHEET NUMBER: ES-02

SHEET TITLE: ONE LINE DIAGRAM & DETAILS

SHEET: | TOTAL SHEETS: OF

MG PÉREZ ROSADO PE LLC
ELECTRO-ENGINEERING SOLUTIONS

CODE COMPLIANCE: THIS PROJECT HAS BEEN DESIGNED IN ACCORDANCE WITH THE PUERTO RICO EXISTING BUILDING CODE 2018 EDITION. CONTRACTORS ARE NOT ALLOWED TO MAKE CHANGES TO THIS PROJECT WITHOUT WRITTEN AUTHORIZATION OF THE ARCHITECT OF RECORD.

# ELECTRICAL NOTES :

1 – ALL WORK ON EXISTING LINES SHALL BE DONE BY NATIONAL GUARD. AT CONTRACTOR EXPENSE.

2 – COORDINATE POINT OF CONNECTION AT NATIONAL GUARD. LOCAL OFFICE BEFORE COMMENCEMENT OF CONSTRUCTION.

3 – THE ELECTRICAL CONTRACTOR SHALL NOTIFY TO NATIONAL GUARD. AREA OFFICE THE BEGINNING OF THE PROJECT.

4 – METER SHALL BE, BY ALL MEANS, ACCESSIBLE TO NATIONAL GUARD. METER READER. NO LOCKED DOOR SHALL BE PERMITTED. USE CLOSET LATCH. NO STORAGE SHALL BE PERMITTED IN METER LOCK.

5 – OPEN BLADE OR FUSE OF PRIMARY SWITCH SHALL BE DE–ENERGIZED.

6 – BLADE OR FUSES RUN SHALL ALWAYS BE CLEARED AT LEAST SIX INCHES (6) FROM METAL PARTS.

7 – ALL EQUIPMENT SHALL BE CONSTRUCTED ACCORDING TO ANSI, NEMA AND NATIONAL GUARD. STANDARDS.

8 – INSTALL APPROVED PRE–FABRICATED RELIEF STRESS CONES AT ALL PRIMARY CABLES TERMINATION.

9 – CONTRACTOR SHALL SUPPLY ONE SPARE FUSE FOR EACH PRIMARY FUSE HOLDER.

10 – CONTRACTOR SHALL SUBMIT SPECIFICATIONS OF MATERIALS PREVIOUSLY APPROVED BY DESIGNER OR PROJECT SUPERVISOR OR OWNER REPRESENTATIVE. (LICENSE ENGINEER).

11 – APPROVAL OF THIS DRAWINGS BY NATIONAL GUARD. DOES NOT INCLUDE STRUCTURAL AND FOUNDATIONS

12 – ALL CONSTRUCTION WORK SHALL BE DONE IN A THOROUGH AND WORKMANLIKE MANNER IN ACCORDANCE WITH THE PLANS, SPECIFICATIONS, AND CONSTRUCTION DRAWINGS, THE LATEST EDITION OF THE NATIONAL ELECTRICAL CODE SHALL BE FOLLOWED EXCEPT WHERE LOCAL REGULATIONS ARE MORE STRINGENT, IN WHICH CASE, LOCAL REGULATIONS SHALL GOVERN.

13 – GROUND SYSTEM FOR PEDESTAL VAULTS, TRANSFORMER AND SWITCHING UNITS SHALL HAVE A MAXIMUM RESISTANCE OF TEN (10) OHMS. THE CONTRACTOR SHALL VERIFY THIS CONDITION IN THE FIELD.

14 – AT ONE MILE FROM SEA SHORE ALL EQUIPMENT SHALL BE STAINLESS STEEL.

15 – THE RESISTANT BETWEEN GROUND, A ABSOLUTE EARTH NOT EXCEED TEN (10) OHMS. THIS TEST SHALL BE MADE IN THE PRESENCE OF THE ENGINEER'S REPRESENTATIVE, SHOULD THE RESISTANCE EXCEED THE REQUIRED VALUE, THEN ADDITIONAL GROUND MATS SHALL BE PROVIDE UNTIL THE REQUIRED VALVE IS OBTAINED.

16 – THE ENTIRE CONDUIT SYSTEM SHALL BE THOROUGHLY GROUNDED CONTINUITY OF CONDUIT SYSTEM, THAT IS TO SERVED AS GROUNDING CONDUCTOR SHALL BE ASSURED AT THE POINTS OF CONNECTION TO CABINETS, BOXES, ECT. BY USING APPROVED BONDING FITTINGS OR PROCEEDING APPROVED FOR THE PURPOSE, IN ACCORDANCE ARTICLE 250 OF THE N.E.G.

17 – TRANSFORMER WITH P.C.B OIL SHALL NOT BE ACCEPTED.

18 – CONTRACTOR SHALL VERIFY EXISTING ELECTRICAL UTILITIES IN THE FIELD AND SHALL NOTIFY THE ENGINEER OF ANY MAYOR DISCREPANCIES ASKING FOR WRITTEN INSTRUCTIONS BEFORE PROCEEDING WITH WORKS.

19– THE PROJECT'S OWNER SHALL PAY NATIONAL GUARD. THE AMOUNT OF $0.0. FOR IMPROVEMENTS TO NATIONAL GUARD.'S ELECTRICAL SYSTEM.

20– ALL PAYMENTS TO NATIONAL GUARD. SHALL BE MADE AT LEAST TWO MONTH IN ADVANCE FROM THE CONSTRUCTION START DATE.

21– CONTRACTOR SHALL COORDINATE ALL WORKS AT NATIONAL GUARD. LOCAL OFFICE ON PONCE.

22– ALL TRANSFORMER MUST COMPLY WITH THE NATIONAL GUARD. STANDARD FOR IMPROVED TRANSFORMER LOSSES AS INDICATED IN THE TABLE FOR SINGLE PHASE TRANSFORMER CORE AND WINDING OF 1/1/2010 AND SHALL COMPLY WITH D.O.E REQUIREMENTS.

23– THE ENDORSEMENT OF THIS DRAWINGS BY NATIONAL GUARD DOES NOT RELIEVE THE CONTRACTOR TO COMPLY WITH NATIONAL GUARD AND NEC LATEST STANDARDS.

# SPECIAL NOTES:

1. THE PROJECT'S OWNER WILL CONTRIBUTE NATIONAL GUARD WITH: THE SUM OF $0.00

2. THIS CONTRIBUTION IS MADE ACCORDING TO THE PROPOSED LOAD, IN ACCORDANCE TO "REGLAMENTO PARA DETERMINAR Y COBRAR LAS APORTACIONES DE PERSONAS O INSTITUCIONES EN PROYECTOS DE DESARROLLO".

3. NATIONAL GUARD WILL NOT CONNECT THE PROJECT TO ITS ELECTRICAL SYSTEM, UNTIL THE OWNER CONSTITUTES THE RIGHT OF WAYS REQUIRED BY THE "REGLAMENTO DE SERVIDUMBRES PARA LA AUTORIDAD DE ENERGÍA ELÉCTRICA". THIS NOTE APPLIES TO ALL RIGHT OF WAYS REQUIRED, INSIDE OR OUTSIDE THE LIMITS OF THE PROJECT.

4. THE INSTALLATION OF MEASUREMENT SYSTEMS SHALL BE COORDINATED WITH THE "OFICINA DE MEDICIÓN" OF THE CORRESPONDING REGION. THE DESIGNER OR THE ELECTRICAL CONTRACTOR SHALL CONSULT WITH NATIONAL GUARD ABOUT THE EQUIPMENT AND MATERIALS TO BE USED, THE LOCATION OF THE EQUIPMENT SHALL BE CONSULTED TOO.

5. THE INSTALLATION OF SUBSTATIONS, TRANSFORMERS, OR OTHER ELECTRICAL EQUIPMENT REGARDING THE SEWAGE SYSTEM, WATER LINES OR OTHER UTILITIES IS PROHIBITED.

6. THE OWNER SHALL LEAVE A LOCK FOR NATIONAL GUARD INTERLACED WITH PRIVATE ONE.

# GENERAL NOTES :

1. THESE PLANS COINCIDE WITH THE INSCRIPTION PLANS SUBMITTED IN THE "ADMINISTRACIÓN DE REGLAMENTOS Y PERMISOS" OFFICE (ARPE).

2. BEFORE BEGINNING THE ELECTRICAL WORKS, THE PROJECT?S OWNER IS RESPONSIBLE OF OBTAINING ALL THE ENDORSEMENTS, PERMITS, AND RIGHT OF WAYS REQUIRED BY GOVERNMENTAL, STATE, MUNICIPAL, FEDERAL AND PRIVATE ENTITIES, WITH REGARD TO THE TYPE OF PROJECT PROPOSED.

3. THE PROJECT'S OWNER SHALL CONTRACT THE SERVICES OF A LICENSED AND COLLEGIATE ENGINEER, WHO INSPECTS THE CONSTRUCTION OF THE ELECTRICAL WORKS ACCORDING TO LAW # 7 OF JULY 19, 1985, AS AMENDED, AND WITH NATIONAL GUARD'S "REGLAMENTO DE CERTIFICACIÓN DE PLANOS DE PROYECTOS DE CONSTRUCCIÓN ELÉCTRICA". BEFORE STARTING THE PROJECT, THE OWNER SHALL NOTIFY NATIONAL GUARD THE DESIGNATION OF THIS PRIVATE INSPECTOR.

4. THE EXECUTION OF THE ELECTRICAL WORKS, AS DESIGNED IN THESE PLANS, SHALL OBSERVE THE BEST PRACTICE OF THE ELECTRIC AND CONSTRUCTION INDUSTRY, IN ACCORDANCE TO THE NORMS AND REGULATIONS ADOPTED BY NATIONAL GUARD AND CONCERNING AGENCIES. THEY SHOULD ALSO COMPLY WITH NEC AND NESC CODES, AND OTHER ADOPTED STANDARDS OF IEEE, NFPA, NEMA Y ANSI.

5. THE CONTRACTOR IS NOT AUTHORIZED TO MAKE VARIATIONS IN THIS DESIGN. THE CONTRACTOR IS RESPONSIBLE OF CONSULTING WITH THE DESIGNER OR DESIGNATED INSPECTOR OF THIS PROJECT, ANY DOUBT CONCERNING THE INTERPRETATION OF THE DRAWINGS, THE EXECUTION OF THE PROPOSED WORKS, TECHNICAL SPECIFICATIONS, OR DISCREPANCIES BETWEEN THE FIELD'S EXISTING CONDITION AND THOSE USED FOR DESIGN PURPOSES.

6. THE OWNER OR ELECTRICAL CONTRACTOR SHALL NOTIFY NATIONAL GUARD THE BEGINNING OF THE CONSTRUCTION OF THE PROJECT BY SUBMITTING THE "NOTIFICACIÓN DE COMIENZO DE PROYECTO" DOCUMENT TO THE ENGINEERING OF DISTRIBUTION DEPARTMENT OF THE CORRESPONDING REGION, WITH AT LEAST FIFTEEN DAYS OF ANTICIPATION OF THE PROPOSED DATE.

7. THE PRIVATE INSPECTOR AND THE ELECTRIC CONTRACTOR ARE RESPONSIBLE OF ASSISTING TO THE PRECONSTRUCTION MEETING, WHICH SHOULD BE COORDINATED WITH THE ENGINEERING OF DISTRIBUTION DEPARTMENT OF THE CORRESPONDING REGION. CORRESPONDING REGION, WITH AT LEAST FIFTEEN DAYS OF ANTICIPATION OF THE PROPOSED DATE.

8. EVERY JOB TO BE REALIZED ON ENERGIZED LINES, INCLUDING THE CONNECTION OF THIS PROJECT, SHALL BE REALIZED BY NATIONAL GUARD. THE PROPONENT SHALL ASSUME ALL COSTS INCLUDING EQUIPMENT, MATERIALS AND LABOR. THE PROPONENT SHALL SOLICIT NATIONAL GUARD AN ESTIMATE FOR THESE JOBS, WHICH WILL BE VALID FOR THREE MONTHS AFTER ITS EXPEDITION.

9. WITHOUT A WRITTEN AUTHORIZATION BY NATIONAL GUARD, IT IS PROHIBITED TO REALIZE ANY TYPE OF JOBS IN THE RIGHT OF WAY'S STRIPS. NATIONAL GUARD WILL NOT APPROVE THE CONNECTIONS OF PROJECTS WITH INVASION CONDITIONS OR THAT NOT COMPLY WITH ALL THE SECURITY STANDARDS.

# MATERIALS:

1. ALL EQUIPMENT TO BE USED IN THE CONSTRUCTION, SHALL COMPLY WITH IEEE, ANSI, NEMA AND ASTM STANDARDS.

2. THE CONTRACTOR IS RESPONSIBLE OF VERIFYING WITH NATIONAL GUARD THAT ALL MATERIAL AND EQUIPMENT TO BE USED IS APPROVED BY NATIONAL GUARD, PREVIOUS TO ITS INSTALLATION. NATIONAL GUARD RESERVES THE RIGHT OF ACCEPTING ANY EQUIPMENT TO BE TRANSFERRED.

3. ALL EQUIPMENT AND MATERIAL (INCLUDING TRANSFORMERS AND SUBSTATION CABINETS) TO BE INSTALLED AT ONE MILE OR LESS OF DISTANCE FROM A BODY OF SALT WATER SHALL BE CONSTRUCTED IN STAINLESS STEEL, WITH EXCEPTION OF THE METER BASES.

4. IN UNDERGROUND SYSTEMS, PRIMARY CABLES WITH TERMINATIONS OF 15 KV SHALL BE USED FOR DISTRIBUTION VOLTAGES AND OF 46 KV FOR LINES OF 38 KV.

5. IN AERIAL SYSTEMS, POLYMER INSULATORS OF 15 KV SHALL BE USED FOR DISTRIBUTIONS VOLTAGES AND OF 46 KV FOR LINES OF 38 KV.

6. THE CONTRACTOR IS RESPONSIBLE OF LABELING ALL TRANSFORMERS TO BE TRANSFERRED TO NATIONAL GUARD, WITH A PROPERTY NUMBER PROVIDED BY THE CORRESPONDING DEPARTMENT OF ENGINEERING DISTRIBUTION.

# SYSTEMS :

1. THE PROJECT OWNER IS RESPONSIBLE FOR TESTING THE PRIMARY AND SECONDARY CABLES WITH THEIR TERMINATIONS. THE RESULTS OF THESE TEST MUST BE IN ACCORDANCE WITH THE PARAMETERS ESTABLISHED BY NATIONAL GUARD FOR THEM. THESE TEST MUST BE CARRIED OUT IN COORDINATION WITH THE REPRESENTATIVE OF THE INSPECTION OFFICE OF THE CORRESPONDING DISTRIBUTION ENGINEERING DEPARTMENT.

2. DURING THE INSTALLATION OF THE CABLE, IT MUST BE PROTECTED FROM MOISTURE AND ABRASION. THE CONTRACTOR IS RESPONSIBLE FOR INSTALLING THE CABLE USING RECOMMENDED PULLING PRACTICES. TO NOT EXCEED THE TENSION SPECIFIED FOR THE CABLE.

3. THE REGISTER COVERS (MANHOLES) TO BE INSTALLED IN THE PLANTING AREA MUST BE PROTECTED BY A REINFORCED CONCRETE SLAB, AS SPECIFIED IN THE URD–52 STANDARD.

4. IN THOSE CASES WHERE THE PROJECT IS LOCATED ONE MILE FROM SALT WATER, THE RISING PIPES MUST BE SCHEDULE 80 OR FIBERGLASS, AS APPROVED BY NATIONAL GUARD

5. THE FOUNDATION OF THE UNDERGROUND SYSTEM WILL BE INSPECTED BY LNATIONAL GUARD BEFORE BEING COVERED AND COMPACTED.

6. EVERY UNDERGROUND INSTALLATION TO VEHICULAR TRAFFIC WILL HAVE TO BE PROTECTED WITH CONCRETE. THOSE THAT ARE NEAR OTHER UTILITY INSTALLATIONS WILL HAVE A MINIMUM CLEARANCE OF 13 INCHES FROM THEM.

7. THE AMOUNT OF REPLACEMENT FUSES THAT THE CONTRACTOR WILL PROVIDE WILL BE THE SAME AMOUNT AS THOSE INSTALLED IN EACH SUBSTATION.

8. THE CONNECTOR THAT WILL BE USED FOR GROUNDING ANTENNAS AND SUBSTATION WILL BE THERMO–WELD OR COMPRESSION.

9. THE CONTRACTOR WILL PROVIDE FISHWIRE IN EACH SPARE CONDUITS.

10. EVERY DISTRIBUTION SYSTEM WILL HAVE A MAXIMUM GROUND RESISTANCE OF 10 OHM. A NEUTRAL GROUNDING ROD SHALL BE INSTALLED ON EVERY FOUR POLES OR EVERY 1000 FT AND ON ALL TRANSFORMERS.

11. EACH CONCRETE POLE BASE MUST INCLUDE TWO CONDUITS FOR FUTURE USE, AS REQUIRED BY NATIONAL GUARD.

12. THE BASES FOR THE POLES HAVE TO BE INSPECTED BY NATIONAL GUARD DURING THEIR CONSTRUCTION PHASES.

MG PÉREZ ROSADO PE LLC
ELECTRO-ENGINEERING SOLUTIONS

CODE COMPLIANCE: THIS PROJECT HAS BEEN DESIGNED IN ACCORDANCE WITH THE PUERTO RICO EXISTING BUILDING CODE 2018 EDITION. CONTRACTORS ARE NOT ALLOWED TO MAKE CHANGES TO THIS PROJECT WITHOUT WRITTEN AUTHORIZATION OF THE ARCHITECT OF RECORD.


Yo, Mildred Gisela Perez Rosado, Ingeniera licenciada con CIC 32,624, certifico que he preparado o supervisado el diseño estos planos y las especificaciones correspondientes, y que he preparado o supervisado que dichos planos y especificaciones cumplen con los Reglamentos y Códigos de Construcción Vigentes de Conjunto y las disposiciones aplicables de los Reglamentos y Códigos de Construcción Vigentes de Corporaciones Públicas con jurisdicción. Certifico, además, que he preparado estos planos y especificaciones se ha cumplido cabalmente con lo dispuesto en la Ley Núm. 173 de 12 de agosto de 1988, según enmendada, conocida como a "Ley para la Inversión por la Industria Puertorriqueña" y con la Ley Núm. 346 de 30 de agosto de 1974, según enmendada, Ley Núm. 96 de 6 de julio de 1978, según enmendada, y que entiendo que cualquier declaración falsa o falsificación de los hechos aquí aseverados podría conllevar la revocación por negligencia ya sea por mi, mis agentes o empleados, o por otras personas con mi consentimiento, y podría estar sujeto a cualquier acción judicial y disciplinaria por la OCPr.


CERTIFIED:

arquiteg
ARQUITECTOS
INGENIEROS
PLANIFICADORES

CONSTRUCTION AND FACILITIES MANAGEMENT OFFICE

PUERTO RICO ARMY NATIONAL GUARD
#552 BORINQUEN TRAIL, FORT BUCHANAN, PUERTO RICO 00934

PROJECT:
RESTORATION REPAIR OF BUILDING 149, FATC | P/N: 432122
FORT ALLEN TRAINING CENTER, JUANA DIAZ, PUERTO RICO

REVISIONS

| NO. | DESCRIPTION | DATE |
|---|---|---|
| 1 | | |
| 2 | | |
| 3 | | |
| 4 | | |
| 5 | | |
| 6 | | |

100% BIDDING SET
NOT FOR CONSTRUCTION
BY: V.M.V. DATE: NOV 04, 2024

DESIGN:
MILDRED GISELA PEREZ

SUPERVISOR:
MILDRED GISELA PEREZ

SHEET NUMBER:
ES-03

SHEET TITLE:
NOTES

SHEET: TOTAL SHEETS: OF

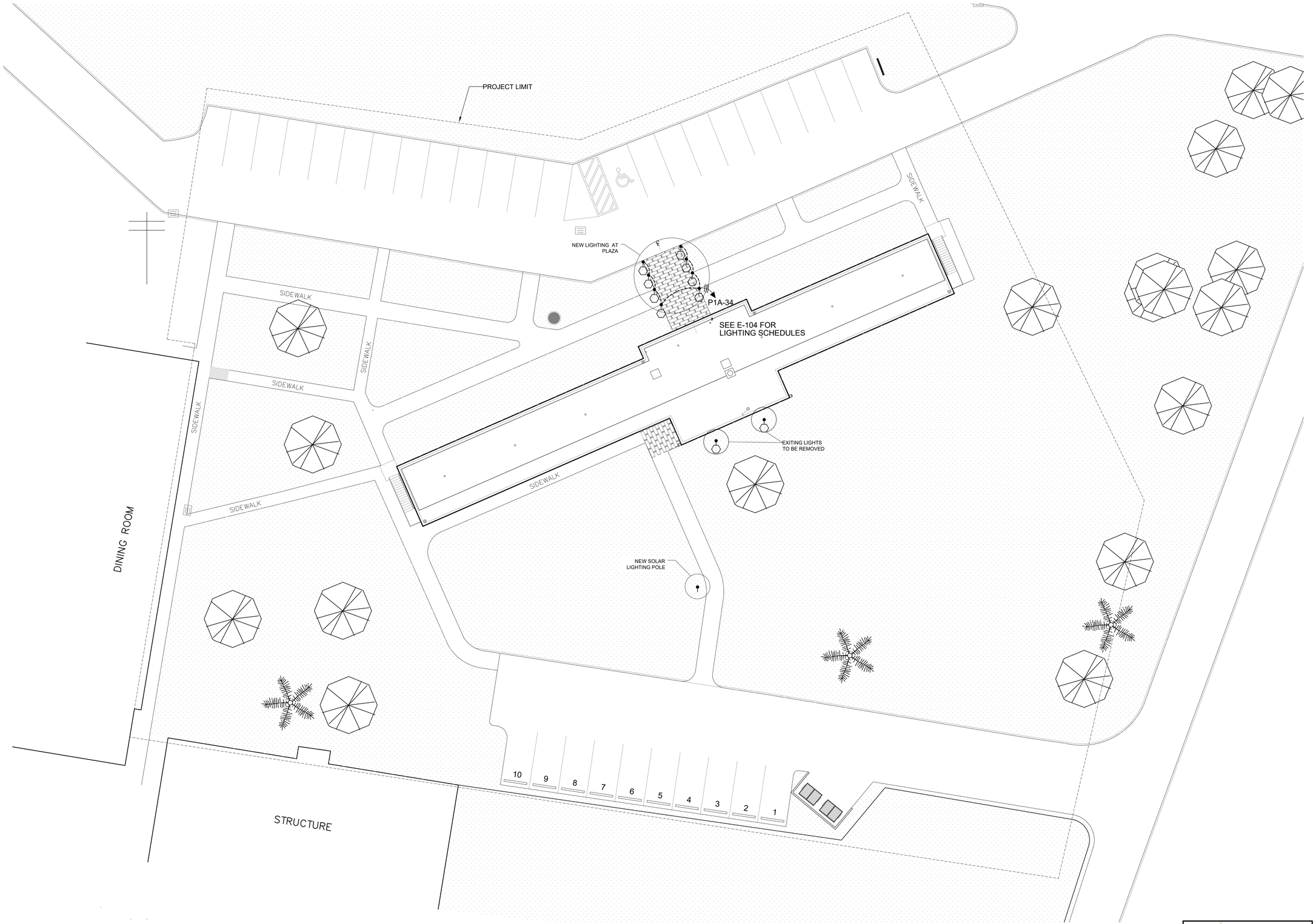


SITE LIGHTING PLAN (1)
N.T.S.

CODE COMPLIANCE: THIS PROJECT HAS BEEN DESIGNED IN ACCORDANCE WITH THE PUERTO RICO EXISTING BUILDING CODE 2018 EDITION. CONTRACTORS ARE NOT ALLOWED TO MAKE CHANGES TO THIS PROJECT WITHOUT WRITTEN AUTHORIZATION OF THE ARCHITECT OF RECORD.

MG PÉREZ ROSADO PE LLC.
ELECTRO-ENGINEERING SOLUTIONS

Yo, Mildred Gisela Perez Rosado, ingeniera licenciada número 10287, certifico que soy el profesional que diseñó estos planos y las especificaciones complementarias. También, certifico que entiendo que dichos planos y especificaciones cumplen con las disposiciones aplicables del Reglamento Conjunto y las disposiciones aplicables de los Reglamentos y Códigos de Construcción Vigentes de las Agencias, Juntas Reglamentadoras o Corporaciones Públicas con jurisdicción. Certifico, además, que en la preparación de estos planos y especificaciones se ha cumplido cabalmente con lo dispuesto en la Ley Núm. 14 de 8 de enero de 2004, según enmendada, conocida como la "Ley para la Inversión por la Industria Puertorriqueña" y con la Ley Núm. 319 de 15 de mayo de 1938, según enmendada, Ley Núm. 96 de 6 de julio de 1978, según enmendada, según aplique. Reconozco que cualquier declaración falsa o falsificación de los hechos que se haya producido por desconocimiento o por negligencia ya sea por mí, mis agentes o empleados, o por otras personas con mi conocimiento, me hacen responsable de cualquier acción judicial y disciplinaria por la OGPe.

CERTIFIED:

arquiteg
ARQUITECTOS
INGENIEROS
PLANIFICADORES

CONSTRUCTION AND FACILITIES MANAGEMENT OFFICE

PUERTO RICO ARMY NATIONAL GUARD
#552 BORINQUENEER TRAIL, FORT BUCHANAN, PUERTO RICO 00934

PROJECT:
RESTORATION REPAIR OF BUILDING 149, FATC | P/N: 432122
FORT ALLEN TRAINING CENTER, JUANA DIAZ, PUERTO RICO

REVISIONS

| NO. | DESCRIPTION | DATE | NO. | DESCRIPTION | DATE |
|---|---|---|---|---|---|
| 1 | | | | | |

100% BIDDING SET
NOT FOR CONSTRUCTION
BY: V.M.V. DATE: NOV 04, 2024

DESIGN:
MILDRED GISELA PEREZ

SUPERVISOR:
MILDRED GISELA PEREZ

SHEET NUMBER:
EL-1

SHEET TITLE:
SITE LIGHTING PLAN
ADVANCE COPY

SHEET: TOTAL SHEETS:
OF

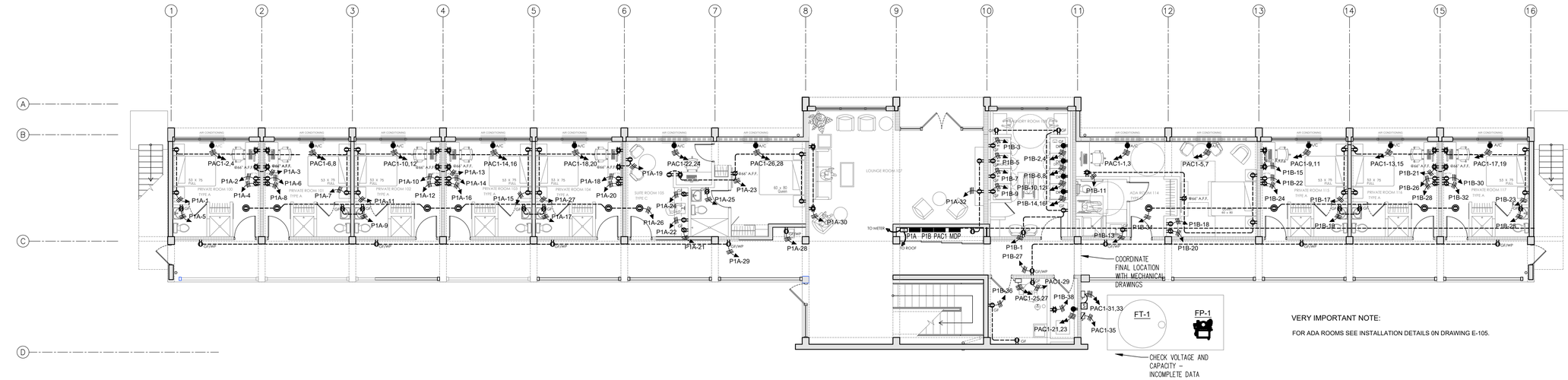


## FIRST FLOOR POWER PLAN

SCALE: 1/8" = 1'-0"

1

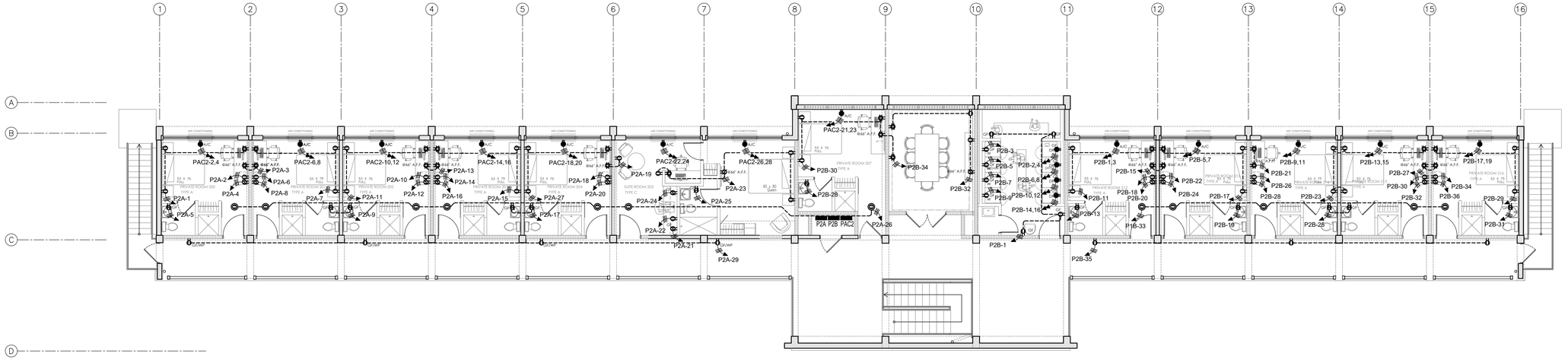


## SECOND FLOOR POWER PLAN

SCALE: 1/8" = 1'-0"

2

VERY IMPORTANT NOTE:

FOR ADA ROOMS SEE INSTALLATION DETAILS ON DRAWING E-105.

CODE COMPLIANCE: THIS PROJECT HAS BEEN DESIGNED IN ACCORDANCE WITH THE PUERTO RICO EXISTING BUILDING CODE 2018 EDITION. CONTRACTORS ARE NOT ALLOWED TO MAKE CHANGES TO THIS PROJECT WITHOUT WRITTEN AUTHORIZATION OF THE ARCHITECT OF RECORD.


Yo, Mildred Gisela Perez Pinzon, ingeniero licenciado número 10281, certifico que soy el profesional que diseñó estos planos y las especificaciones. Certifico además que los planos y especificaciones que dichos planos y especificaciones cumplen con el Reglamento de Construcción vigente. Conjunto y las disposiciones aplicables de los Reglamentos y Códigos de Construcción vigentes de Corporaciones Públicas con jurisdicción. Certifico, además, que los planos y especificaciones y las especificaciones se ha cumplido cabalmente con lo establecido en la Ley Num. 45 de 18 de abril de 1935, según enmendada, conocida como la "Ley para la Inversión por la Industria Puertorriqueña" y con la Ley Num. 96 de 6 de julio de 1978, según enmendada. Ley Num. 96 de 6 de julio de 1978. Cualquier declaración falsa o falsificación de los documentos aquí mencionados podría resultar en mi responsabilidad civil o penal, y/o en una acción judicial y disciplinaria por la OGPe.

CERTIFIED:

arquiteg
ARQUITECTOS
INGENIEROS
PLANIFICADORES

CONSTRUCTION AND FACILITIES MANAGEMENT OFFICE


PUERTO RICO ARMY NATIONAL GUARD

#552 BORINQUENEER TRAIL, FORT BUCHANAN, PUERTO RICO 00934

PROJECT:

RESTORATION REPAIR OF BUILDING 149, FATC | P/N: 432122

FORT ALLEN TRAINING CENTER, JUANA DIAZ, PUERTO RICO

| NO. | DESCRIPTION | DATE |
|---|---|---|
| 1 | | |

REVISIONS

100% BIDDING SET
NOT FOR CONSTRUCTION
BY: V.M.V. DATE: NOV 04, 2024

DESIGN: MILDRED GISELA PEREZ

SUPERVISOR: MILDRED GISELA PEREZ

SHEET NUMBER: E-101

SHEET TITLE: PROPOSED FIRTS & SECOND FLOOR POWER PLANS

SHEET: | TOTAL SHEETS: OF

MG PÉREZ PROGRAMS PR LLC
ELECTRO-ENGINEERING SOLUTIONS

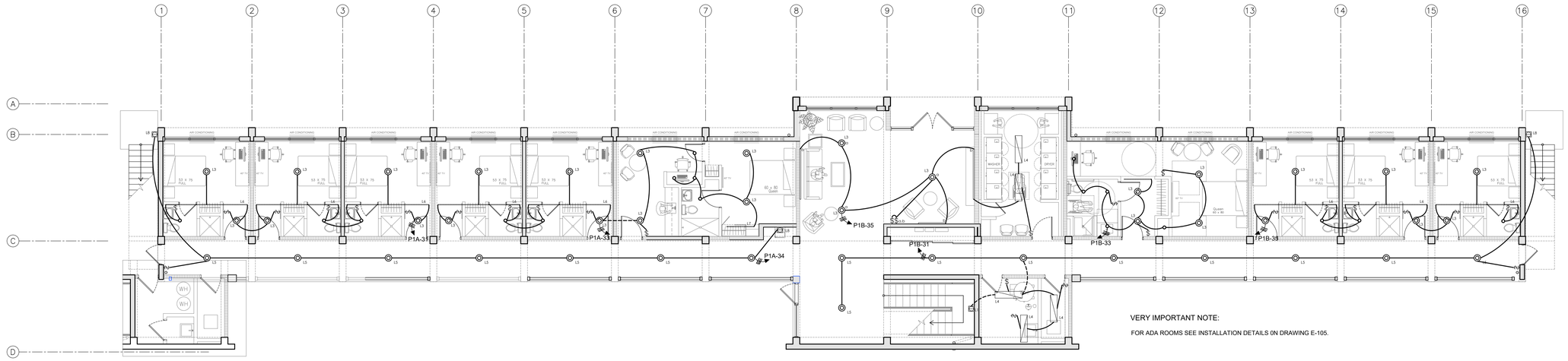


VERY IMPORTANT NOTE:

FOR ADA ROOMS SEE INSTALLATION DETAILS ON DRAWING E-105.

## FIRST FLOOR LIGHTNING PLAN (3)

SCALE: 1/8" = 1'-0"

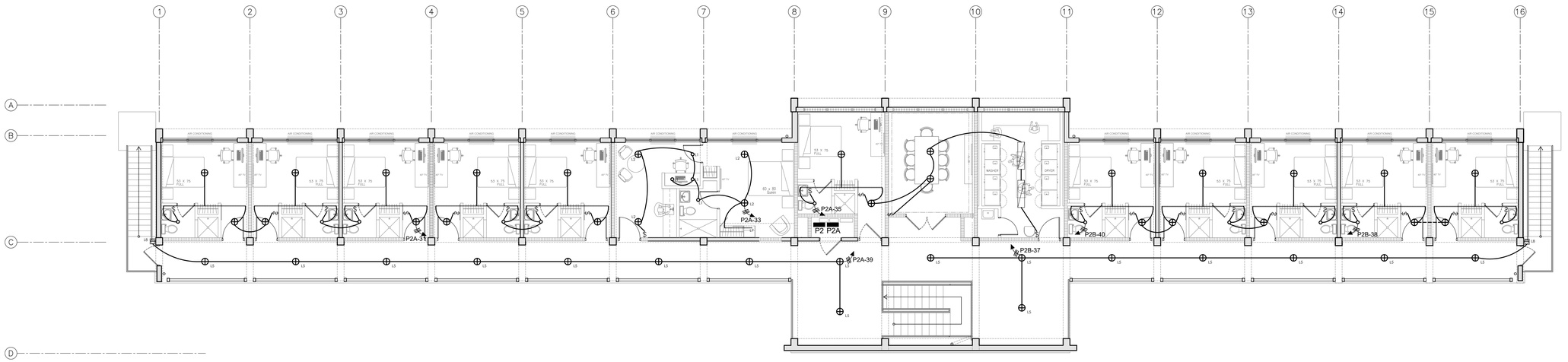


## SECOND FLOOR LIGHTNING PLAN (4)

SCALE: 1/8" = 1'-0"

CODE COMPLIANCE: THIS PROJECT HAS BEEN DESIGNED IN ACCORDANCE WITH THE PUERTO RICO EXISTING BUILDING CODE 2018 EDITION. CONTRACTORS ARE NOT ALLOWED TO MAKE CHANGES TO THIS PROJECT WITHOUT WRITTEN AUTHORIZATION OF THE ARCHITECT OF RECORD.


Yo, Mildred Gisela Perez Rosado, Ingeniera licenciada número 16287, certifico que soy el profesional que ha preparado estos planos y especificaciones complementarias. También, certifico que entiendo que estos planos y especificaciones cumplen con las ordenanzas, leyes y reglamentos aplicables.

Conjunto y las disposiciones aplicables de las Reglamentaciones Federales, Estatales y Municipales de las Agencias, fuentes Reglamentadoras o Certificadoras y Códigos aplicables. Además, que en la preparación de estos planos y especificaciones yo he cumplido cabalmente con la responsabilidad profesional requerida por la ley según enmendada, conocida como la "Ley para la Reglamentación de la Profesión de Ingeniería y de la Agrimensura" (Ley Núm. 319 de 15 de mayo de 1938, según enmendada), y la Ley de Arquitectura y Arquitectos (Ley Núm. 173 de 12 de agosto de 1988, según enmendada, según aplicare). Reconozco que cualquier declaración falsa o falsificación de los hechos aquí consignados podría constituir delito grave y/o por negligencia ya sea por mi, mis agentes o empleados, podría conllevar responsabilidad civil o conocimiento, me hacen responsable de cualquier acción judicial y disciplinaria por la CGPE.


CERTIFIED:

arquiteg
ARQUITECTOS
INGENIEROS
PLANIFICADORES

CONSTRUCTION AND FACILITIES MANAGEMENT OFFICE

PUERTO RICO ARMY NATIONAL GUARD
#552 BORINQUENEER TRAIL, FORT BUCHANAN, PUERTO RICO 00934

PROJECT:
RESTORATION REPAIR OF BUILDING 149, FATC | P/N: 432122
FORT ALLEN TRAINING CENTER, JUANA DIAZ, PUERTO RICO

| NO. | DESCRIPTION | DATE |
|---|---|---|
| | REVISIONS | |
| 1 | | |

100% BIDDING SET
NOT FOR CONSTRUCTION
BY: V.M.V. DATE: NOV 04, 2024

DESIGN: MILDRED GISELA PEREZ

SUPERVISOR: MILDRED GISELA PEREZ

SHEET NUMBER: E-102

SHEET TITLE: PROPOSED FIRTS & SECOND FLOOR LIGHTING PLANS

SHEET: | TOTAL SHEETS: OF

MG PÉREZ ROSADO PE LLC
ELECTRO-ENGINEERING SOLUTIONS

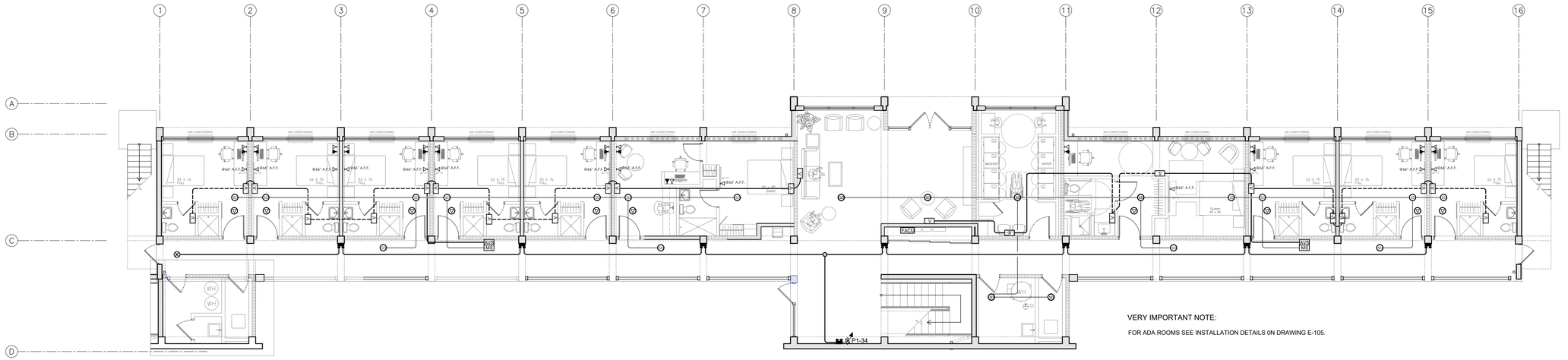


FIRST FLOOR SIGNAL PLAN (5)
SCALE: 1/8" = 1'-0"

VERY IMPORTANT NOTE:

FOR ADA ROOMS SEE INSTALLATION DETAILS ON DRAWING E-105.

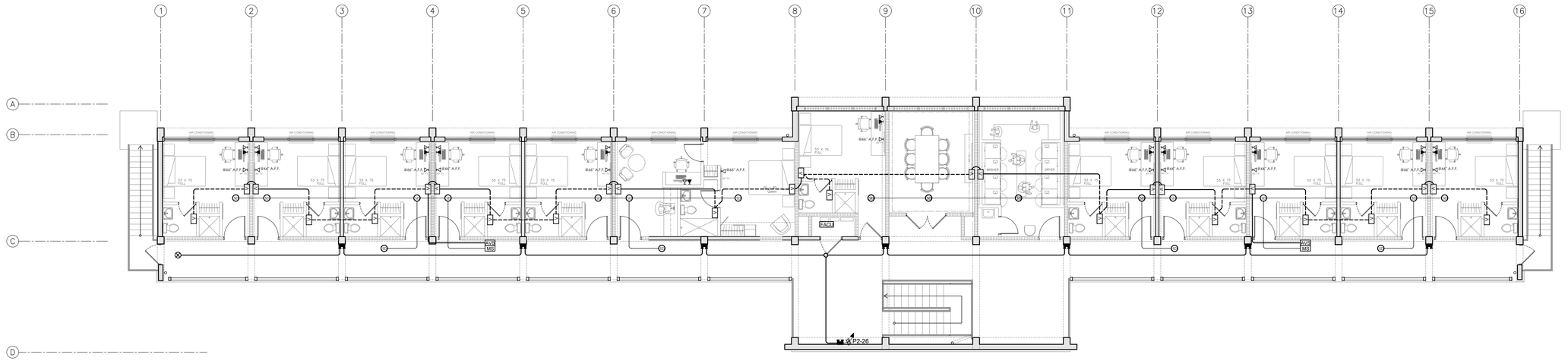


SECOND FLOOR SIGNAL PLAN (6)
SCALE: 1/8" = 1'-0"

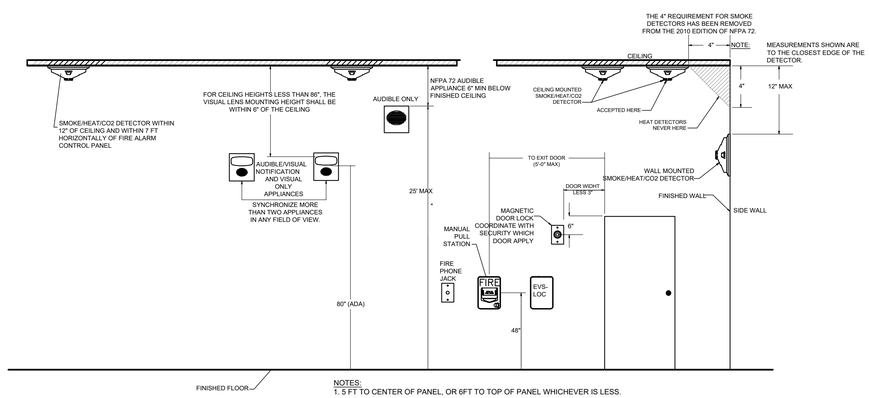


NOTES:
1. 5 FT TO CENTER OF PANEL, OR 6FT TO TOP OF PANEL WHICHEVER IS LESS.
2. REFER TO THE PROPER DEVICE INSTALLATION INSTRUCTIONS FOR BACKBOX MOUNTING HEIGHT.

TYPICAL FIRE ALARM MOUNTING HEIGHTS

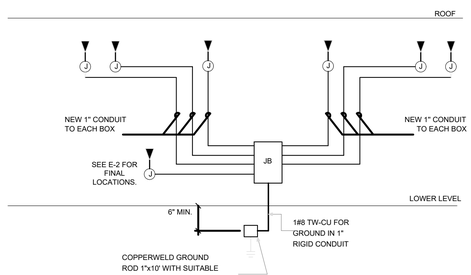


TELEPHONE (TYPICAL)

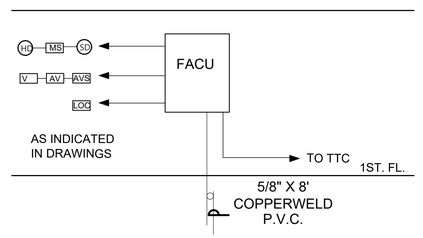


FAP ONE LINE DIAGRAM

CODE COMPLIANCE: THIS PROJECT HAS BEEN DESIGNED IN ACCORDANCE WITH THE PUERTO RICO EXISTING BUILDING CODE 2018 EDITION. CONTRACTORS ARE NOT ALLOWED TO MAKE CHANGES TO THIS PROJECT WITHOUT WRITTEN AUTHORIZATION OF THE ARCHITECT OF RECORD.

MC PÉREZ RIOSADOM PE LLC.
ELECTRO-ENGINEERING SOLUTIONS

Yo, Mildred Gisela Perez Rosado, Ingeniera licenciada con número 25,934 certifico que he preparado y diseñado estos planos y las especificaciones correspondientes, y que los mismos cumplen con los edificios planos y especificaciones cumplen con las disposiciones aplicables del Reglamento de Construcciones Públicas con jurisdicción. Certifico, además que he preparado y diseñado estos planos y especificaciones se ha cumplido cabalmente con lo dispuesto en la Ley Núm. 14 de 8 enero de 2004, según enmendada, "Ley para la Promoción y Desarrollo de la Inversión por la Industria Puertorriqueña" y con la Ley Núm. 76 de 24 de junio de 2000, según enmendada, Ley Núm. 96 de 6 de julio de 1978, según enmendada, conocida como "Ley para Asegurar el Uso de Facilidades Físicas Accesibles a Personas con Impedimentos". Reconozco que cualquier declaración falsa o falsificación de los hechos que se haya producido por desconocimiento o error, no me exime de responsabilidad civil, criminal o administrativa, ni la de mis empleados, o por otras personas con mi consentimiento y/o autorización. Entiendo que cualquier acción judicial y disciplinaria por la OGPe.

CERTIFIED:

arquiteg
ARQUITECTOS
INGENIEROS
PLANIFICADORES

CONSTRUCTION AND FACILITIES MANAGEMENT OFFICE

PUERTO RICO ARMY NATIONAL GUARD
#552 BORINQUENEER TRAIL, FORT BUCHANAN, PUERTO RICO 00934

PROJECT:
RESTORATION REPAIR OF BUILDING 149, FATC | P/N: 432122
FORT ALLEN TRAINING CENTER, JUANA DIAZ, PUERTO RICO

REVISIONS

| NO. | DESCRIPTION | DATE |
|---|---|---|
| 1 | | |

100% BIDDING SET
NOT FOR CONSTRUCTION
BY: V.M.V. DATE: NOV 04, 2024

DESIGN: MILDRED GISELA PEREZ

SUPERVISOR: MILDRED GISELA PEREZ

SHEET NUMBER: E-103

SHEET TITLE: PROPOSED FIRTS & SECOND FLOOR SIGNALING PLANS

SHEET: TOTAL SHEETS: OF

## ELECTRICAL PANELS SCHEDULE - MDP

| EQUIPMENT DESCRIPTION | TRIP AMPS | POLE | | | | POLE | TRIP AMPS | EQUIPMENT DESCRIPTION |
|---|---|---|---|---|---|---|---|---|
| P1A | 60 | 3 | 1 | A | 2 | 3 | 60 | P2A |
| | | | 3 | B | 4 | | | |
| | | | 5 | C | 6 | | | |
| P1B | 125 | 3 | 7 | | 8 | 3 | 125 | P2B |
| | | | 9 | | 10 | | | |
| | | | 11 | | 12 | | | |
| PAC1 | 300 | 3 | 13 | | 14 | 3 | 100 | PAC2 |
| | | | 15 | | 16 | | | |
| | | | 17 | | 18 | | | |
| SPARE | 20 | 1 | 19 | | 20 | 1 | 20 | SPARE |
| SPARE | 20 | 1 | 21 | | 22 | 1 | 20 | SPARE |
| | | 1 | 23 | | 24 | 1 | | |

INDICATES THIS CIRCUIT TO RECEIVE HANDLE LOCK-ON CLIP. SQUARE-D TYPE NOOD OR SIMILAR 33K AIC

PANEL MDP 3 PHASE 4 WIRE 120/208 VOLTS GROUND BUS – FLUSH MTD. 400A/400A MAIN BREAKER

## ELECTRICAL PANELS SCHEDULE - P1A

| EQUIPMENT DESCRIPTION | TRIP AMPS | POLE | | | | POLE | TRIP AMPS | EQUIPMENT DESCRIPTION |
|---|---|---|---|---|---|---|---|---|
| PRIVATE ROOM 100 RECEPTACLES | 20 | 1 | 1 | A | 2 | 1 | 20 | PRIVATE ROOM 100 REFRIGERATOR |
| PRIVATE ROOM 100 & 101 RECEPTACLES | 20 | 1 | 3 | B | 4 | 1 | 20 | PRIVATE ROOM 100 MICROWAVE |
| PRIVATE ROOM 100 BATHROOM RECEPTACLE | 20 | 1 | 5 | C | 6 | 1 | 20 | PRIVATE ROOM 101 REFRIGERATOR |
| PRIVATE ROOM 101 RECEPTACLES | 20 | 1 | 7 | | 8 | 1 | 20 | PRIVATE ROOM 101 MICROWAVE |
| PRIVATE ROOM 102 & 103 BATHROOM RECEP. | 20 | 1 | 9 | | 10 | 1 | 20 | PRIVATE ROOM 102 REFRIGERATOR |
| PRIVATE ROOM 102 RECEPTACLES | 20 | 1 | 11 | | 12 | 1 | 20 | PRIVATE ROOM 102 MICROWAVE |
| PRIVATE ROOM 102 & 103 RECEPTACLES | 20 | 1 | 13 | | 14 | 1 | 20 | PRIVATE ROOM 103 REFRIGERATOR |
| PRIVATE ROOM 103 RECEPTACLES | 20 | 1 | 15 | | 16 | 1 | 20 | PRIVATE ROOM 103 MICROWAVE |
| PRIVATE ROOM 103 & 104 RECEPTACLES | 20 | 1 | 17 | | 18 | 1 | 20 | PRIVATE ROOM 104 REFRIGERATOR |
| PRIVATE ROOM 104 RECEPTACLES | 20 | 1 | 19 | | 20 | 1 | 20 | PRIVATE ROOM 104 MICROWAVE |
| SUITE ROOM 105 SMALL APPLIANCES | 20 | 1 | 21 | | 22 | 1 | 20 | SUITE ROOM 105 REFRIGERATOR |
| SUITE ROOM 105 RECEPTACLES | 20 | 1 | 23 | | 24 | 1 | 20 | SUITE ROOM 105 MICROWAVE |
| SUITE ROOM 105 BATHROOM RECEP. | 20 | 1 | 25 | | 26 | 1 | 20 | CEILING RECEPTACLES FOR WIFI |
| SUITE ROOM 104 RECEPTACLES | 20 | 1 | 27 | | 28 | 1 | 20 | DRINKING FOUNTAIN |
| HALLWAY RECEPTACLES | 20 | 1 | 29 | | 30 | 1 | 20 | LOUNGE ROOM 107 RECEPTACLES |
| PRIVATE ROOM TYPE A 100,101,102 LIGHTS | 20 | 1 | 31 | | 32 | 1 | 20 | LOUNGE ROOM 107 RECEPTACLES |
| ROOMS 104 & 105 LIGHTS | 20 | 1 | 33 | | 34 | 1 | 20 | EXTERIOR LIGTHS |
| LOUNGE ROOM 107 LIGHTS | 20 | 1 | 35 | | 36 | 1 | 20 | SPARE |
| SPARE | 20 | 1 | 37 | | 38 | 1 | | |
| SPARE | 20 | 1 | 39 | | 40 | 1 | | |
| | | 1 | 41 | | 42 | 1 | | |

INDICATES THIS CIRCUIT TO RECEIVE HANDLE LOCK-ON CLIP. SQUARE-D TYPE NOOD OR SIMILAR 14K AIC

PANEL P1A 3 PHASE 4 WIRE 120/208 VOLTS GROUND BUS – FLUSH MTD. 100A/60A A MAIN BREAKER

## ELECTRICAL PANELS SCHEDULE - P1B

| EQUIPMENT DESCRIPTION | TRIP AMPS | POLE | | | | POLE | TRIP AMPS | EQUIPMENT DESCRIPTION |
|---|---|---|---|---|---|---|---|---|
| LAUNDRY RECEPTACLES | 20 | 1 | 1 | A | 2 | 2 | 30 | DRYER |
| WASHER | 20 | 1 | 3 | B | 4 | | | |
| WASHER | 20 | 1 | 5 | C | 6 | 2 | 30 | DRYER |
| WASHER | 20 | 1 | 7 | | 8 | | | |
| WASHER | 20 | 1 | 9 | | 10 | 2 | 30 | DRYER |
| ADA ROOM 114 RECEPTACLES | 20 | 1 | 11 | | 12 | | | |
| ADA ROOM 114 BATHROOM RECEP. | 20 | 1 | 13 | | 14 | 2 | 30 | DRYER |
| PRIVATE ROOM 115 RECEPTACLES | 20 | 1 | 15 | | 16 | | | |
| PRIVATE ROOM 116 RECEPTACLES | 20 | 1 | 17 | | 18 | 1 | 20 | ADA ROOM 114 REFRIGERATOR |
| PRIVATE ROOM 115 & 116 RECEPTACLES | 20 | 1 | 19 | | 20 | 1 | 20 | ADA ROOM 114 MICROWAVE |
| PRIVATE ROOM 118 RECEPTACLES | 20 | 1 | 21 | | 22 | 1 | 20 | SUITE ROOM 115 REFRIGERATOR |
| PRIVATE ROOM 117 RECEPTACLES | 20 | 1 | 23 | | 24 | 1 | 20 | SUITE ROOM 115 MICROWAVE |
| ADA ROOM 117 BATHROOM RECEP. | 20 | 1 | 25 | | 26 | 1 | 20 | SUITE ROOM 116 REFRIGERATOR |
| HALLWAY RECEPTACLES | 20 | 1 | 27 | | 28 | 1 | 20 | SUITE ROOM 116 MICROWAVE |
| HALLWAY LIGHTS | 20 | 1 | 29 | | 30 | 1 | 20 | SUITE ROOM 117 REFRIGERATOR |
| ADA ROOM 114 LIGHTS | 20 | 1 | 31 | | 32 | 1 | 20 | SUITE ROOM 117 MICROWAVE |
| ROOMS 115,116 & 117 LIGHTS | 20 | 1 | 33 | | 34 | 1 | 20 | CEILING RECEPTACLES FOR WIFI |
| LOUNGE ROOM 208 LIGHTS | 20 | 1 | 35 | | 36 | 1 | 20 | JANITOR ROOM RECEPTACLES |
| SPARE | 20 | 1 | 37 | | 38 | 1 | 20 | TELECOMUNICATION ROOM RECEPTACLES |
| SPARE | 20 | 1 | 39 | | 40 | 1 | 20 | SPARE |
| | | 1 | 41 | | 42 | 1 | 20 | SPARE |

INDICATES THIS CIRCUIT TO RECEIVE HANDLE LOCK-ON CLIP. SQUARE-D TYPE NOOD OR SIMILAR 14K AIC

PANEL P1B 3 PHASE 4 WIRE 120/208 VOLTS GROUND BUS – FLUSH MTD. 125A/125A MAIN BREAKER

## ELECTRICAL PANELS SCHEDULE - PAC1

| EQUIPMENT DESCRIPTION | TRIP AMPS | POLE | | | | POLE | TRIP AMPS | EQUIPMENT DESCRIPTION |
|---|---|---|---|---|---|---|---|---|
| AC-ROOM 114 | 20 | 2 | 1 | A | 2 | 2 | 20 | AC-PRIVATE ROOM TYPE A 100 |
| | | | 3 | B | 4 | | | |
| AC-ROOM 114 | 20 | 2 | 5 | C | 6 | 2 | 20 | AC-PRIVATE ROOM TYPE A 101 |
| | | | 7 | | 8 | | | |
| AC-ROOM 115 | 20 | 2 | 9 | | 10 | 2 | 20 | AC-PRIVATE ROOM TYPE A 102 |
| | | | 11 | | 12 | | | |
| AC-ROOM 116 | 20 | 2 | 13 | | 14 | 2 | 20 | AC-PRIVATE ROOM TYPE A 103 |
| | | | 15 | | 16 | | | |
| AC-ROOM 117 | 20 | 2 | 17 | | 18 | 2 | 20 | AC-PRIVATE ROOM TYPE A 104 |
| | | | 19 | | 20 | | | |
| AC-TELECOMUNICATION ROOM 117 | 20 | 2 | 21 | | 22 | 2 | 20 | AC-SUITE ROOM TYPE C 105 |
| | | | 23 | | 24 | | | |
| W.H | 75 | 2 | 25 | | 26 | 2 | 20 | AC-SUITE ROOM TYPE C 105 |
| | | | 27 | | 28 | | | |
| RP-1 – HOT WATER RECIRCULATION | 20 | 1 | 29 | | 30 | 1 | 20 | SPARE |
| FT-1 | 80 | 2 | 31 | | 32 | 1 | 20 | SPARE |
| | | | 33 | | 34 | 1 | 20 | SPARE |
| FP-1 | 30 | 1 | 35 | | 36 | 1 | | |
| | | 1 | 37 | | 38 | 1 | | |
| | | 1 | 39 | | 40 | 1 | | |
| | | 1 | 41 | | 42 | 1 | | |

INDICATES THIS CIRCUIT TO RECEIVE HANDLE LOCK-ON CLIP. SQUARE-D TYPE NOOD OR SIMILAR 14K AIC

PANEL PAC1 3 PHASE 4 WIRE 120/208 VOLTS GROUND BUS – FLUSH MTD. 200A/150A MAIN BREAKER

## ELECTRICAL PANELS SCHEDULE - P2A

| EQUIPMENT DESCRIPTION | TRIP AMPS | POLE | | | | POLE | TRIP AMPS | EQUIPMENT DESCRIPTION |
|---|---|---|---|---|---|---|---|---|
| PRIVATE ROOM 200 RECEPTACLES | 20 | 1 | 1 | A | 2 | 1 | 20 | PRIVATE ROOM 200 REFRIGERATOR |
| PRIVATE ROOM 200 & 201 RECEPTACLES | 20 | 1 | 3 | B | 4 | 1 | 20 | PRIVATE ROOM 200 MICROWAVE |
| PRIVATE ROOM 200 BATHROOM RECEPTACLE | 20 | 1 | 5 | C | 6 | 1 | 20 | PRIVATE ROOM 201 REFRIGERATOR |
| PRIVATE ROOM 201 RECEPTACLES | 20 | 1 | 7 | | 8 | 1 | 20 | PRIVATE ROOM 201 MICROWAVE |
| PRIVATE ROOM 202 & 203 BATHROOM RECEP. | 20 | 1 | 9 | | 10 | 1 | 20 | PRIVATE ROOM 202 REFRIGERATOR |
| PRIVATE ROOM 202 RECEPTACLES | 20 | 1 | 11 | | 12 | 1 | 20 | PRIVATE ROOM 202 MICROWAVE |
| PRIVATE ROOM 202 & 203 RECEPTACLES | 20 | 1 | 13 | | 14 | 1 | 20 | PRIVATE ROOM 203 REFRIGERATOR |
| PRIVATE ROOM 203 RECEPTACLES | 20 | 1 | 15 | | 16 | 1 | 20 | PRIVATE ROOM 203 MICROWAVE |
| PRIVATE ROOM 203 & 204 RECEPTACLES | 20 | 1 | 17 | | 18 | 1 | 20 | PRIVATE ROOM 204 REFRIGERATOR |
| PRIVATE ROOM 204 RECEPTACLES | 20 | 1 | 19 | | 20 | 1 | 20 | PRIVATE ROOM 204 MICROWAVE |
| SUITE ROOM 205 SMALL APPLIANCES | 20 | 1 | 21 | | 22 | 1 | 20 | SUITE ROOM 205 REFRIGERATOR |
| SUITE ROOM 205 RECEPTACLES | 20 | 1 | 23 | | 24 | 1 | 20 | SUITE ROOM 205 MICROWAVE |
| SUITE ROOM 205 BATHROOM RECEP. | 20 | 1 | 25 | | 26 | 1 | 20 | CEILING RECEPTACLES FOR WIFI |
| SUITE ROOM 204 RECEPTACLES | 20 | 1 | 27 | | 28 | 1 | 20 | PRIVATE ROOM 204 RECEPTACLES |
| HALLWAY RECEPTACLES 206 | 20 | 1 | 29 | | 30 | 1 | 20 | PRIVATE ROOM 204 BATHROOM RECEP. |
| PRIVATE ROOM TYPE A 200,201,202 LIGHTS | 20 | 1 | 31 | | 32 | 1 | 20 | LOUNGE ROOM 208 RECEPTACLES |
| ROOMS 204 & 205 LIGHTS | 20 | 1 | 33 | | 34 | 1 | 20 | LOUNGE ROOM 208 RECEPTACLES |
| LOUNGE ROOM 208 LIGHTS | 20 | 1 | 35 | | 36 | 1 | 20 | |
| SPARE | 20 | 1 | 37 | | 38 | 1 | | |
| SPARE | 20 | 1 | 39 | | 40 | 1 | | SPARE |
| | | 1 | 41 | | 42 | 1 | | |

INDICATES THIS CIRCUIT TO RECEIVE HANDLE LOCK-ON CLIP. SQUARE-D TYPE NOOD OR SIMILAR 14K AIC

PANEL P2A 3 PHASE 4 WIRE 120/208 VOLTS GROUND BUS – FLUSH MTD. 100A/60A MAIN BREAKER

## ELECTRICAL PANELS SCHEDULE - P2B

| EQUIPMENT DESCRIPTION | TRIP AMPS | POLE | | | | POLE | TRIP AMPS | EQUIPMENT DESCRIPTION |
|---|---|---|---|---|---|---|---|---|
| LAUNDRY RECEPTACLES | 20 | 1 | 1 | A | 2 | 2 | 30 | DRYER |
| WASHER | 20 | 1 | 3 | B | 4 | | | |
| WASHER | 20 | 1 | 5 | C | 6 | 2 | 30 | DRYER |
| WASHER | 20 | 1 | 7 | | 8 | | | |
| WASHER | 20 | 1 | 9 | | 10 | 2 | 30 | DRYER |
| PRIVATE ROOM 212 RECEPTACLES | 20 | 1 | 11 | | 12 | | | |
| PRIVATE ROOM 212 BATHROOM RECEP. | 20 | 1 | 13 | | 14 | 2 | 30 | DRYER |
| PRIVATE ROOM 212 & 213 RECEPTACLES | 20 | 1 | 15 | | 16 | | | |
| PRIVATE ROOM 213 RECEPTACLES | 20 | 1 | 17 | | 18 | 1 | 20 | SUITE ROOM 212 REFRIGERATOR |
| PRIVATE ROOM 213 RECEPTACLES | 20 | 1 | 19 | | 20 | 1 | 20 | SUITE ROOM 212 MICROWAVE |
| PRIVATE ROOM 214 RECEPTACLES | 20 | 1 | 21 | | 22 | 1 | 20 | SUITE ROOM 213 REFRIGERATOR |
| PRIVATE ROOM 214 RECEPTACLES | 20 | 1 | 23 | | 24 | 1 | 20 | SUITE ROOM 213 MICROWAVE |
| PRIVATE ROOM 214 BATHROOM RECEP. | 20 | 1 | 25 | | 26 | 1 | 20 | SUITE ROOM 214 REFRIGERATOR |
| PRIVATE ROOM 215 RECEPTACLES | 20 | 1 | 27 | | 28 | 1 | 20 | SUITE ROOM 214 MICROWAVE |
| PRIVATE ROOM 216 RECEPTACLES | 20 | 1 | 29 | | 30 | 1 | 20 | SUITE ROOM 215 REFRIGERATOR |
| PRIVATE ROOM 216 BATHROOM RECEP. | 20 | 1 | 31 | | 32 | 1 | 20 | SUITE ROOM 215 MICROWAVE |
| CEILING RECEPTACLES FOR WIFI | 20 | 1 | 33 | | 34 | 1 | 20 | SUITE ROOM 216 REFRIGERATOR |
| HALLWAY RECEPTACLES | 20 | 1 | 35 | | 36 | 1 | 20 | SUITE ROOM 216 MICROWAVE |
| HALLWAY LIGHTS | 20 | 1 | 37 | | 38 | 1 | 20 | ROOMS 215 & 216 LIGHTS |
| SPARE | 20 | 1 | 39 | | 40 | 1 | 20 | ROOMS 212, 213 & 214 LIGHTS |
| SPARE | | 1 | 41 | | 42 | 1 | 20 | SPARE |

INDICATES THIS CIRCUIT TO RECEIVE HANDLE LOCK-ON CLIP. SQUARE-D TYPE NOOD OR SIMILAR 14K AIC

PANEL P2B 3 PHASE 4 WIRE 120/208 VOLTS GROUND BUS – FLUSH MTD. 125A/125A MAIN BREAKER

## ELECTRICAL PANELS SCHEDULE - PAC2

| EQUIPMENT DESCRIPTION | TRIP AMPS | POLE | | | | POLE | TRIP AMPS | EQUIPMENT DESCRIPTION |
|---|---|---|---|---|---|---|---|---|
| AC-ROOM 212 | 20 | 2 | 1 | A | 2 | 2 | 20 | AC-PRIVATE ROOM TYPE A 200 |
| | | | 3 | B | 4 | | | |
| AC-ROOM 213 | 20 | 2 | 5 | C | 6 | 2 | 20 | AC-PRIVATE ROOM TYPE A 201 |
| | | | 7 | | 8 | | | |
| AC-ROOM 214 | 20 | 2 | 9 | | 10 | 2 | 20 | AC-PRIVATE ROOM TYPE A 202 |
| | | | 11 | | 12 | | | |
| AC-ROOM 215 | 20 | 2 | 13 | | 14 | 2 | 20 | AC-PRIVATE ROOM TYPE A 203 |
| | | | 15 | | 16 | | | |
| AC-ROOM 216 | 20 | 2 | 17 | | 18 | 2 | 20 | AC-PRIVATE ROOM TYPE A 204 |
| | | | 19 | | 20 | | | |
| AC-ROOM 207 | 20 | 2 | 21 | | 22 | 2 | 20 | AC-ROOM 205 |
| | | | 23 | | 24 | | | |
| SPARE | 20 | 1 | 25 | | 26 | 2 | 20 | AC-ROOM 205 |
| SPARE | 20 | 1 | 27 | | 28 | | | |
| SPARE | | 1 | 29 | | 30 | 1 | 20 | SPARE |
| | | 1 | 31 | | 32 | 1 | 20 | SPARE |
| | | 1 | 33 | | 34 | 1 | | |
| | | 1 | 35 | | 36 | 1 | | |
| | | 1 | 37 | | 38 | 1 | | |
| | | 1 | 39 | | 40 | 1 | | |
| | | 1 | 41 | | 42 | 1 | | |

INDICATES THIS CIRCUIT TO RECEIVE HANDLE LOCK-ON CLIP. SQUARE-D TYPE NOOD OR SIMILAR 14K AIC

PANEL PAC2 3 PHASE 4 WIRE 120/208 VOLTS GROUND BUS – FLUSH MTD. 100A/100A MAIN BREAKER

## VERY IMPORTANT NOTES:

- SEE NOTE #37 IN DRAWING E-105
- SEE NOTE #29 IN DRAWING E-105
- ALL EXTERIOR EQUIPMENTS SHALL BE STAINLESS STEEL. (NEMA 3R).
- CONTRACTOR SHALL COORNINATE THE STARTING OPERATION SYSTEM WITH MECHANICAL DRAWINGS.

## LIGHTING FIXTURE SCHEDULE

| TYPE | PRODUCT DESCRIPTION | LAMP | |
|---|---|---|---|
| LIGHTING FIXTURES | | | |
| L1 | 8" Ø DOWNLIGHT WITH REGRESS LENS FOR VISUAL COMFORT // SUITABLE FOR WET LOCATION (WHEN LOCATED ON BATHROOMS) // MOUNTING: RECESSED MOUNTED // VOLT: 120V // DIMMING: 1%, ELV / MLV PHASE-CUT // CRI/CCT: 3500K // LUMENS: 1009 LM // BEAM: FLOOD (94°) // LENS: MICRO PRISM LENS // FINISH: MATTE WHITE // RATED LIFE: 50,000 HOURS // COMPLIANCE & RATING: BAA COMPLIANCE, NON-IC RATED, ETL CERTIFIED, UL STANDARDS | LED | |
| L2 | 18" Ø LIGHT FIXTURE // MOUNTING: SURFACE MOUNTED // VOLT & DIMMING: 1%, 0-10, 120V/277V // LUMENS: 4800 LM // CRI/CCT: 3500K // FINISH: MATTE WHITE // LENS: WHITE OPTICAL ACRYLIC // COMPLIANCE & RATING: BAA COMPLIANCE, NON-IC RATED, ETL CERTIFIED, UL STANDARDS // RATED LIFE: 50,000 HOURS | LED | |
| L3 | 24" Ø LIGHT FIXTURE // MOUNTING: SURFACE MOUNTED // VOLT & DIMMING: 1%, 0-10, 120V/277V // LUMENS: 4800 LM // CRI/CCT: 3500K // FINISH: MATTE WHITE // LENS: WHITE OPTICAL ACRYLIC // COMPLIANCE & RATING: BAA COMPLIANCE, NON-IC RATED, ETL CERTIFIED, UL STANDARDS // RATED LIFE: 50,000 HOURS | LED | |
| L4 | 1' WIDE X 4' LONG LIGHT FIXTURE, SUITABLE FOR DAMP & WET LOCATIONS // MOUNTING: SURFACE MOUNTED // COLOR: 3500K // LENS: HIGH TRANSMISSION ACRYLIC // DIMMER & VOLT: 1%, 0-10V, 120-277V // FINISH: N/A // COMPLIANCE & RATING: BAA COMPLIANCE, ETL CERTIFIED, UL AND CUL LISTED // RATED LIFE: >50,000 HOURS | LED | |
| L5 | 14"Ø LIGHT FIXTURE // VOLTAGE: UNV 120-277V // CRI/CCT: CRI>85, 3500K // LUMENS: 1500 LM (15W) // FINISH: WHITE // DIMMING: 0-10V, 1% DIMMING // LENS: IMPACT RESISTANT, UV STABILIZED, WHITE POLYCARBONATE DIFFUSER // LIFETIME: >70,000 // CONNECT TO TIMER ON ELECTRICAL PANEL | LED | |
| L6, L7 | LED STRIP LIGHT (0.4 WIDE, 240.2" MAX RUN, 2" LED SPACING, 0.1 HEIGHT) // CRI & COLOR: 95 CRI, 3500K // LUMEN: 708 LM/FT // EFFICIENCY: 120LM/W // BEAM: 120° // LIFETIME: 60,000 HOURS // NUMBER OF LEDs PER 1 FT: 48 LEDs // DIMMING: SHALL BE DIMMABLE // INPUT VOLTAGE: 24 V DC | LED | |
| L8 | 10 " OR 12" VANDAL RESISTANT OUTDOOR WALL MOUNTED LIGHT FIXTURE // CRI & COLOR: 80 CRI, 3500K // VOLTAGE: UNV 120-277V // DIMMING: 0-10V DIMMING TO 10% // FINISH: WHITE // EMERGENCY BATTER PACK // CONNECT TO TIMER ON ELECTRICAL PANEL // LENS: UV STABILIZED, FROSTED POLYCARBONATE LENS LIFETIME: 50,000 HOURS. | LED | |
| P1 | LED STRIP LIGHT (0.4 WIDE, 240.2" MAX RUN, 2" LED SPACING, 0.1 HEIGHT). SUITABLE FOR EXTERIOR, WET LOCATION, TO BE INSTALLED RECESSED ON ALUMINUM FLAT ARCH // CRI & COLOR: 95 CRI, 3500K // LUMEN: 708 LM/FT // EFFICIENCY: 120LM/W // BEAM: 120° // LIFETIME: 60,000 HOURS // NUMBER OF LEDs PER 1 FT: 48 LEDs // DIMMING: SHALL BE DIMMABLE // INPUT VOLTAGE: 24 V DC | LED | |
| P2 | 20' TALL SOLAR POWERED LIGHT POLES // MATERIAL & FINISH: HEAVY DUTY DIE-CAST ALUMINUM WITH MARINE GRADE POWDER COATING AND STAINLESS STEEL FITTURES // COLOR TEMPERATURE: 3500K // LUMENS: 9,350 LM // POLE: ROUND TAPERED ALUMINUM POLE W/ FOUR (4) BOLT BASE (COLOR TO MATCH - LIGHT FIXTURE) | LED | |
| E1 | 11" X 13" X 1.75" (H x H x D) UNIVERSAL MOUNT EDGE LIT EXIT SIGN // MOUNTING: SURFACE MOUNTED // LENS: UV-STABILIZED, CLEAR ACRYLIC PANEL // ARROWS: AS PER ARCHITECTURAL PLAN // SIDE PANELS: SINGLE FACE AND DOUBLE FACE AS PER ARCHITECTURAL DRAWINGS // LETTERING: GREEN LETTERING // HOUSING FINISH: WHITE // PROVIDE EMERGENCY BATTERY BACK UP | LED | |
| E2 | EMERGENCY LIGHTING, 2 HEAD WITH MIRRORED REFLECTORS, 8 LEDs PER HEAD // MOUNTING: WALL MOUNTED // VOLTAGE: 120 /277V // FINISH: WHITE | LED | |

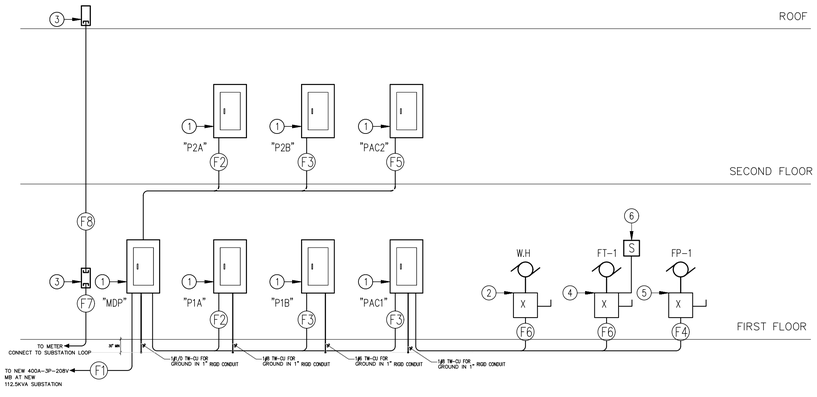


ONE LINE DIAGRAM

## RISER DIAGRAM LEGEND:

1. PANEL AS PER SCHEDULE
2. 100A SAFETY SWITCH 208V, 2P, F:75A OR AS PER MANUFACTURER RECOMMENDATION
3. J.B FOR FUTURE SOLAR PANEL SYSTEM FINAL LOCATION TO BE COORDINATED IN FIELD.
4. 100A SAFETY SWITCH 208V, 2P, F:80A OR AS PER MANUFACTURER RECOMMENDATION
5. 30A DISCONNECT SWITCH 120V, 1P, F:30A OR AS PER MANUFACTURER RECOMMENDATION
6. MANUAL STARTER SIZE 2.

## FEEDER SCHEDULE

- F1 4#500 RHW-2- & 1 #2 AWG IN 4" CONDUIT. & 1-4" SPARE
- F2 4#4 RHW-2 & 1#8 IN 1.5" CONDUIT.
- F3 4#1/0 RHW-2 & 1#6 IN 2" CONDUIT.
- F4 2#10 RHW-2 & 1#10 IN 3/4" CONDUIT.
- F5 4#2 RHW-2 & 1#8 IN 1.5" CONDUIT.
- F6 3#2 RHW-2 & 1#8 IN 1.25" CONDUIT.
- F7 2 – 2" CONDUIT WITH A FISH WIRE.
- F8 3 – 2" CONDUIT WITH A FISH WIRE.

CODE COMPLIANCE: THIS PROJECT HAS BEEN DESIGNED IN ACCORDANCE WITH THE PUERTO RICO EXISTING BUILDING CODE 2018 EDITION. CONTRACTORS ARE NOT ALLOWED TO MAKE CHANGES TO THIS PROJECT WITHOUT WRITTEN AUTHORIZATION OF THE ARCHITECT OF RECORD.


Yo, Mildred Gisela Perez Rosado, ingeniera licenciada número 10287, certifico que soy el profesional que realizó los diseños de los planos y documentos complementarios. También, certifico que entiendo que dichos planos y especificaciones cumplen con las disposiciones aplicables de los Reglamentos Conjuntos y disposiciones aplicables de las Agencias, Juntas Reglamentadoras o Corporaciones Públicas concernientes a la Ley para la Reforma del Proceso de Permisos de Puerto Rico (Ley Núm. 339 de 15 de mayo de 1938, según enmendada, conocida como la "Ley para la Reforma del Proceso de Permisos de Puerto Rico", según enmendada, según aplique). Reconozco que cualquier declaración falsa o falsificación de los mismos conllevará la revocación inmediata de mi(s) certificado(s) de idoneidad y/o licencia(s) profesional(es) y por negligencia ya sea por mi, mis agentes o empleados, sin perjuicio de cualquier otra acción. Hasta donde tengo conocimiento, no hacen responsable de cualquier acción judicial y disciplinara por la OCPE.


CERTIFIED:

arquiteg
ARQUITECTOS
INGENIEROS
PLANIFICADORES

CONSTRUCTION AND FACILITIES MANAGEMENT OFFICE

PUERTO RICO ARMY NATIONAL GUARD
#552 BORINQUENEER TRAIL, FORT BUCHANAN, PUERTO RICO 00934

PROJECT:
RESTORATION REPAIR OF BUILDING 149, FATC | P/N: 432122
FORT ALLEN TRAINING CENTER, JUANA DIAZ, PUERTO RICO

| NO. | DESCRIPTION | DATE |
|---|---|---|
| 1 | | |
| 2 | | |
| 3 | | |
| 4 | | |
| 5 | | |
| 6 | | |

100% BIDDING SET
NOT FOR CONSTRUCTION
BY: V.M.V. DATE: NOV 04, 2024

DESIGN: MILDRED GISELA PEREZ

SUPERVISOR: MILDRED GISELA PEREZ

SHEET NUMBER: E-104

SHEET TITLE: PANELS SCHEDULE, ONE LINE DIAGRAM & LIGHTING FIXTURE SCHEDULE

SHEET: | TOTAL SHEETS: OF

MG PÉREZ ROSADO PE LLC
ELECTRO-ENGINEERING SOLUTIONS

# LEGEND:

WALL LIGHTING OUTLET, 7'-6" A.F.F. UNLESS OTHERWISE INDICATED IN THE DRAWINGS.

4" x 1-1/2" OCTAGONAL OUTLET BOX WITH COVER TO BE INSTALLED AT CEILING OR AT 7'6" A.F.F.

DUPLEX CONVENIENCE RECEPTACLE, GROUND TYPE, NEMA 5-20R
20 AMP, 125V, AT 1'-6" A.F.F. UNLESS OTHERWISE INDICATED. W.P. MEANS WEATHER PROOF, (G.F. MEANS GROUND FAULT CIRCUIT INTERRUPTER.).

SAME AS ABOVE BUT AT 42" A.F.F

CUADRUPLEX RECEPTACLE, GROUND TYPE, NEMA 5-20R

CEILING RECEPTACLE, GROUND TYPE, NEMA 5-20R

4" TELEPHONE OUTLET BOX WITH RAISED COVER
CONDUIT TO BE PROVIDED WITH FISH WIRE OR TERMINATED IN A TELEPHONE TERMINAL CABINET (T.T.C.) AT 1'-6" A.F.F.

4" DATA OUTLET BOX WITH RAISED COVER
CONDUIT TO BE PROVIDED WITH FISH WIRE OR TERMINATED IN A TELEPHONE TERMINAL CABINET (T.T.C.) AT 1'-6" A.F.F.

CEILING DATA OUTLET BOX WITH RAISED COVER

3/4" EMT CONDUIT IN WALLS OR FLOOR
NUMBER OF CONDUCTORS INSIDE, NO CROSSHATCH INDICATES TWO CONDUCTORS.

3/4" EMT CONDUIT IN CEILING SLAB
INSIDE PLENUM, NUMBER OF CONDUCTORS INSIDE, NO CROSSHATCH INDICATES TWO CONDUCTORS.

HOMERUN TO PANELBOARD NUMBER OF ARROWS INDICATES NUMBER OF CIRCUITS INSIDE.

PANELBOARD AT 5'-0" A.F.F. AS INDICATED IN SINGLE LINE DIAGRAM.

HEAVY DUTY QUIET SWITCH, WALL TYPE 20A-120 VAC
SINGLE POLE INSTALL FLUSH WITH WALL IN 2-1/8" x 4" GALVANIZED BOX OR GANGED TOGETHER AT 48" A.F.F.
3W INDICATES THREE WAY, 4W MEANS FOUR WAY.
SUBLETTER INDICATES LIGHT CONTROLLED K INDICATES KEY OPERATED.

SAFETY SWITCH. SEE LEGEND FOR DETAILS IN ONE LINE DIAGRAM

2 POLE, 3 WIRE GROUNDING, STRAIGH BLADE,
SINGLE RECEPTACLE, 30A/250V

# SIGNALING LEGEND:

MS — SK-PULL -SA/SK-PULL-DA INTELIIGENT PULL STATION 48" A.F.F. SHALL HAVE PROTECTION COVER.

SD — SURFACE MOUNTED IONIZATION SMOKE DETECTOR.

BT — SMOKE DETECTOR BEAM TRANSMITTER

BR — SMOKE DETECTOR BEAM RECEIVER

AV — WALL/CEILING MOUNTED COMBINATION STROBE/HORN 7'-0" A.F.F. 110 CANDELA

AVS — WALL/CEILING MOUNTED COMBINATION AUDIBLE/VISUAL NOTIFICATION. 7'-0" A.F.F. - SPEAKER STROBE

V — VISUAL DEVICE

HD — SURFACE MOUNTED HEAT DETECTOR

MFAP FRAME SHALL BE STAINLESS STEEL AND RECESSED. SEE DETAILS IN E-103.

FACU — COMBINATION FIRE ALARM/MASS NOTIFICATION CONTROL UNIT 6820EVS INTELLIGENT FIRE ALARM CONTROL PANEL WITH EMERGENCY VOICE SYSTEM

LOC — LOCAL OPERATOR'S CONTROL UNIT EVS-LOC

4" TELEPHONE OUTLET BOX WITH RAISED COVER
CONDUIT TO BE PROVIDED WITH FISH WIRE OR TERMINATED IN A TELEPHONE TERMINAL CABINET (T.T.C.) AT 1'-6" A.F.F.

4" DATA OUTLET BOX WITH RAISED COVER
CONDUIT TO BE PROVIDED WITH FISH WIRE OR TERMINATED IN A TELEPHONE TERMINAL CABINET (T.T.C.) AT 1'-6" A.F.F.

EXIT LIGHT QUANTUM

LED STATIC EMERGENCY EXIT SIGN 4600K QUANTUM

C — 360° HALF SPHERE CAMERA

C — 360° HALF SPHERE WALL CAMERA

SP — SPEAKERS

FAA — FIRE ALARM PANEL REMOTE ANNUNCIATOR

## GENERAL NOTES

1. THE CONTRACTOR IS RESPONSIBLE FOR COORDINATION OF SYSTEM REQUIREMENTS WITH ALL CONDITIONS OF THE BUILDING AND SITE INCLUDING, BUT NOT LIMITED TO, BLIND SPACES, SHELVING, LIGHTS, GRILLES AND DIFFUSERS, PIPING,DUCT WORK, DOORS, WINDOWS, EQUIPMENT PLATFORMS, WALLS (FIRE RATED AND NON-FIRE- RATED), BEAMS, JOISTS,COLUMNS, HVAC EQUIPMENT, ELECTRICAL PANELS AND EQUIPMENT, CEILINGS,AREAS WITHOUT CEILINGS, WALL CONSTRUCTION, FLOORS AND ALL CONSTRUCTION, EQUIPMENT AND BUILDING APPURTENANCES.

2. A.C.POWER CONDUCTORS SUPPLYING POWER TO THE FACP, SUBPANELS, POWER EXTENDERS, ETC. SHALL BE LABELED, MECHANICALLY SECURED, AND RED-MARKED IN ACCORDANCE WITH NFPA 72 g 12.2.3 (2019). A MACHINE-PRODUCED LABEL SHALL BE PROVIDED INSIDE THE DOOR OF EACH ENCLOSURE INDICATING THE LOCATION OF THE CIRCUIT DISCONNECTING MEANS (PANEL LOCATION, PANEL IDENTIFICATION, AND CIRCUIT IDENTIFICATION). COORDINATE THE LOCATION AND QUANTITY OF DEDICATED A.C. POWER CIRCUITS WITH THE ELECTRICAL CONTRACTOR.

3. FIRE ALARM EVACUATION SIGNAL INTELLIGIBILITY SHALL BE TESTED UTILIZING A METHOD(S) DESCRIBED IN ANNEX D OF NFPA 72.

4. WITH RESPECT TO BOTH VISUAL COVERAGE AND AUDIBLE SIGNAL INTELLIGIBILITY, THE LOCATION AND QUANTITY OF NOTIFICATION DEVICES INDICATED ON THE FIRE PROTECTION DESIGN DRAWINGS ARE FOR SCHEMATIC /BIDDING PURPOSES ONLY. THE CONTRACTOR SHALL BE RESPONSIBLE FOR ENSURING ADEQUATE COVERAGE, REGARDLESS IF ADDITIONAL DEVICES ARE NECESSARY.

5. END-OF-LINE DEVICES ARE NOT SHOWN AND SHALL BE PROVIDED AS REQUIRED BY THE SYSTEM MANUFACTURER.

6. AN INTELLIGENT /ANALOG FIRE ALARM SIGNALING SYSTEM AND INTEGRATED MASS NOTIFICATION SYSTEM SHALL BE PROVIDED AS INDICATED. THE FIREALARM SYSTEM SHALL BE SITE PROGRAMMABLE. THE SYSTEM SHALL MONITOR ALL MANUAL PULL STATION(S),SMOKE DETECTOR(S), WATER FLOW SWITCHES, VALVE TAMPER SUPERVISORY SWITCHES, ETC.AND PROVIDE NOTIFICATION IN ACCORDANCE WITH THE DRAWINGS, SPECIFICATIONS, AND APPLICABLE CODES AND STANDARDS.

7. THE FIRE ALARM SYSTEM SHALL BE UL-LISTED FOR CENTRAL STATION SERVICE.

8. ALL INITIATING DEVICES SHALL BE INTELLIGENT / ANALOG WHERE POSSIBLE. SEPARATE ADDRESSABLE MONITOR MODULES SHALL BE PROVIDED FOR EACH CONVENTIONAL INPUT DEVICE SUCH THAT EACH DEVICE IS INDIVIDUALLY INDICATED AT THE FACP AS A DISTINCT INPUT.

9 THE CIRCUIT CONFIGURATIONS SHALL COMPLY WITH THE NFPA 72 REQUIREMENTS FOR THE FOLLOWING:
1.1. THE SLC SHALL BE CLASS B
1.2. THE NAC SHALL BE CLASS B
1.3. THE IDC SHALL BE CLASS B

10. T-TAPPING IN SPEAKER AND STROBE CABLES IS PROHIBITED. ALL SPEAKER AND ALL STROBE CABLES ARE TO BE PULLED, UN-SPLICED, FROM SPEAKER/STROBE TO SPEAKER/STROBE.ELECTRICAL

11. ALL WIRES SHALL BE CHECKED FOR GROUNDS, SHORTS, OPENS, AND CORRECT RESISTANCE, CAPACITANCE, AND OTHER APPLICABLE PARAMETERS PRIOR TO INSTALLATION OF DEVICES AND PRIOR TO TERMINATION OF THE CIRCUITS AT THE FACP OR SUBPANELS.

12. ALL WIRING SHALL BE IN METALLIC CONDUIT. ALL CONDUIT SHALL BE 3/4-IN. MINIMUM. IDENTIFY ALL CONDUCTORS INDIVIDUALLY WITH PERMANENT MARKINGS. PAINT ALL FIRE ALARM JUNCTION BOXES AND COVERS RED IN UNFINISHED AREAS. ALL CONDUIT SHALL HAVE 0.75-INCH WIDE PAINTED RED BANDS AT MINIMUM 25-FOOT INTERVALS AND ON BOTH SIDES OF FLOOR, WALL, CEILING, SLAB PENETRATIONS.

13. PULL ALL CONDUCTORS SPLICE FREE. THE USE OF WIRE NUTS, CRIMPED CONNECTORS, OR TWISTING OF CONDUCTORS IS PROHIBITED.ALL TERMINATIONS MUST BE AT A TERMINAL STRIP OR DEVICE SCREW TERMINAL. RUN ALL WIRING TO CONTROL PANELS AND OTHER CABINETS INTHE VERTICAL OR HORIZONTAL PLANE, MAKE ALL TURNS AT 90-DEGREE ANGLES, AND TIGHTLY BUNDLE AND WRAP ALL WIRE.ALL WIRING MUST BE SOLID COPPER, EXCEPT FOR SPEAKER CIRCUITS OR CIRCUITS REQUIRING SHIELDING. ALL SLC AND IDC SHALL BE MINIMUM 16-GAUGE. UNDER NO CIRCUMSTANCES SHALL CONDUCTORS BE SIZED SMALLER THAN THE MANUFACTURERS' REQUIREMENTS.

14. ALL VISUAL NOTIFICATION APPLIANCES (STROBES) SHALL BE SYNCHRONIZED ON A MINIMUM PER-FLOOR BASIS.ALL VISUAL NOTIFICATION APPLIANCES SHALL BE MARKED "ALERT" AND SHALL BE PROVIDED WITH CLEAR LENSES. ANY SUSPENDED CEILING- MOUNTED NOTIFICATION APPLIANCES SHALL BE CENTERED IN THE TILE. CEILING-MOUNTED NOTIFICATION APPLIANCES SHALL BE UTILIZED IN AREAS WITH SUSPENDED TILE CEILINGS, UNO.

15. SCROLLING TEXT SIGNS SHALL BE INSTALLED IN ACCORDANCE WITH NFPA 72.

16.MANUAL PULL STATIONS SHALL BE FLUSH-MOUNTED IN FINISHED AREAS AND SURFACE- MOUNTED OTHERWISE.

17. FIRE ALARM SYSTEM INPUT (MONITORING) AND OUTPUT (CONTROL) MODULES SHALL BE LOCATED WITHIN 3FT.OF THE MONITORED / CONTROLLED EQUIPMENT WHERE POSSIBLE.

18. COORDINATE THE LOCATION OF CEILING MOUNTED SMOKE DETECTORS WITH HVAC DIFFUSERS. DETECTORS SHALL NOT BE CLOSER THAN 3 FT.TO ANY AIR SUPPLY DIFFUSER OR RETURN AIR OPENING. SUSPENDED CEILING-MOUNTED DETECTORS SHALL BE CENTERED IN THE TILE.

19. SYSTEM SMOKE DETECTOR HEADS SHALL NOT BE INSTALLED UNTIL AFTER FINAL CLEAN UP BY ALLTRADES. ALL SYSTEM SMOKE DETECTORS SHALL BE PROTECTED BY DUST COVERS UP UNTIL THE TIME OF FINAL ACCEPTANCE TESTING.

20. LOCATE THE FAS NAC POWER SUPPLIES AS NEEDED, COORDINATE THE AC POWER FOR THE NAC POWER SUPPLIES WITH THE ELECTRICAL CONTRACTOR.

21. SEE ARCHITECTURAL EXTERIOR ELEVATIONS FOR INSTALLATION OF ANY EXTERIOR FAS NOTIFICATION APPLIANCES.

22. FOR DUCT-TYPE SMOKE DETECTION, THE DETECTORAND APPROPRIATE SAMPLE TUBING SHALL BE FURNISHED BY THE FIRE ALARM CONTRACTOR, INSTALLED IN ACCORDANCE WITH THE MANUFACTURER'S REQUIREMENTS AND LISTING BY THE MECHANICAL CONTRACTOR, AND CONNECTED TO THE FAS BY THE FIRE ALARM CONTRACTOR. FOR DAMPER CLOSURE ASSOCIATED WITH THE DETECTOR, THE OUTPUT MODULE (AND RELAY, IF NECESSARY) SHALL BE FURNISHED, INSTALLED, AND CONNECTED TO THE FAS BY THE FIRE ALARM CONTRACTOR; POWER SHALL BE CONNECTED BY THE ELECTRICAL CONTRACTOR; AND DAMPER CONNECTION SHALL BE MADE BY THE MECHANICAL CONTRACTOR. IT SHALL BE THE RESPONSIBILITY OFTHE FAS CONTRACTOR TO ENSURE THAT THERE IS NO DAMAGE TO THE FAS AS A RESULT OF CONNECTION TO AC POWER.

# FIRE DETECTION SYSTEM

FURNISH AND INSTALL A MICROPROCESSOR BASED ADDRESSABLE FIRE ALARM SYSTEM. THE SYSTEM SHALL BE UL, FACTORY MUTUAL APPROVED AND ELECTRICALLY SUPERVISED.

I. SYSTEM COMPONENTS
- A. MAIN CONTROL PANEL: THE CONTROL PANEL SHALL PROVIDE POWER, ANNUNCIATION, SUPERVISION AND CONTROL FOR THE DETECTION AND ALARM SYSTEM. THE CONTROL PANEL SHALL BE CAPABLE OF MEASURING AND ADJUSTING THE SENSITIVITY OF THE DETECTORS. THE SYSTEM SHALL HAVE A VOICE COMMUNICATION COMMAND CENTER INCLUDING A ONE WAY COMMUNICATION MICROPHONE, TWO WAY FIRE FIREFIGHTER MASTER PHONE, LOCAL PANEL SPEAKER INTEGRAL AUDIO AMPLIFIER WITH BATTERY BACKUP. THE COMMUNICATION SYSTEM SHALL BE CAPABLE TO SEND PRE-RECORDED MESSAGES THROUGH THE BUILDING FIRE ALARM SPEAKERS DISTRIBUTION
- B. INITIATING ADDRESSABLE DEVICES: IONIZATION TYPE SMOKE DETECTORS, HEAT DETECTORS, PULL STATION AS INDICATED IN DRAWINGS
- C. INDICATING DEVICES: SPEAKERS, STROBES LIGHTS AND SPEAKERS/STROBE DEVICES AS INDICATED ON DRAWINGS
- D. ADDRESSABLE CONTROL MODULES FOR THE SPRINKLERS FLOW AND TAMPER SWITCHES.
- E. REMOTE ANNUNCIATOR PANEL: 80 CHARACTERS LIQUID CRYSTAL ALPHANUMERIC DISPLAY TO PROVIDE A DEFINABLE MESSAGE ASSOCIATED WITH EACH DETECTION DEVICE OR ZONE.
- F. BATTERY BACKUP AND BATTERY CHARGER SYSTEM
- G. PRINTER
- H. KEYBOARD AND COLOR GRAPHICS MONITOR DISPLAY
- I. CONDUITS AND WIRES REQUIRED

II. TESTING AND TRAINING
THE SYSTEM SHALL BE TESTED AND ADJUSTED ACCORDING TO NFPA 72. PROVIDE TRAINING TO OWNER'S AUTHORIZED PERSONNEL.

III. ACEPTABLE MANUFACTURERS:
- A. PYROTRONICS
- B. SIMPLEX
- C. NOTIFIER
- D. HONEYWELL
- E. EDWARDS

# ELEVATOR & EXIT DOORS NOTES:

1. THE CONTRACTOR SHALL PROVIDE ONE SET OF NORMALLY OPEN, DRY ELECTRICAL CONTACTS (NO VOLTAGE PRESENT) SUBJECT TO ACTIVATION BY FIRE SENSING DEVICES LOCATED IN THE ELEVATOR ROOM, HOIST WAYS OR IN THE ELEVATOR LOBBY ON ANY LANDING OTHER THAN THE DESIGNATED FIRE RECALL LANDING (MAIN FLOOR). THE CONTACTS SHALL BE WIRED TO AN ELECTRICAL JUNCTION BOX LOCATED AT THE ELEVATOR MACHINE ROOM FOR FINAL CONNECTION TO THE ELEVATOR CONTROL SYSTEM. EACH WIRE TO BE CLEARLY LABELED.
2. A 2" DIAMETER EMT CONDUIT SHALL BE PROVIDED BETWEEN THE ELEVATOR AND REMOTE CONTROL PANEL LOCATED AT MAIN LOBBY FOR, FIRE COMMAND CENTER. WIRING AND CONNECTIONS SHALL BE, PROVIDED BY THE ELEVATOR CONTRACTOR.
3. TELEPHONE COMMUNICATION WIRING TERMINATING IN A JUNCTION BOX LOCATED IN THE ELEVATOR MACHINE ROOM AND ADJACENT TO ELEVATOR MACHINE ROOM.
4. FIRE ALARM CONTRACTOR SHALL PROVIDE A FIREMEN'S TELEPHONE COMMUNICATIONS WIRING TERMINATING IN A JUNCTION BOX LOCATED AT THE ELEVATOR MACHINE ROOM.
5. CONNECT ELEVATOR LIFE SAFETY SPEAKERS AT EACH ELEVATOR TERMINATING AT THE ELEVATOR MACHINE ROOM.
6. THE DOORS SHALL BE HAVE AN INTEGRATE MAGLOCK OF 1200LB AND PUSH BAR EXIT DEVICE. THIS SHALL BE COORDINATED WITH ELECTRICAL DRAWINGS.
7. THE DOORS SHALL BE HAVE A PUSH BAR EXIT DEVICE. SEE ARCHITECTURAL DRAWINGS.
8. EACH DOORS SHALL BE SINGLE GANG FOR A CARDREADER WITH CONECTION TO THE MAGLOCK FORM EACH DOOR AND CONNECT TO THE MECHANIC ROOM. COORDINATE WITH ELECTRICAL DRAWINGS.

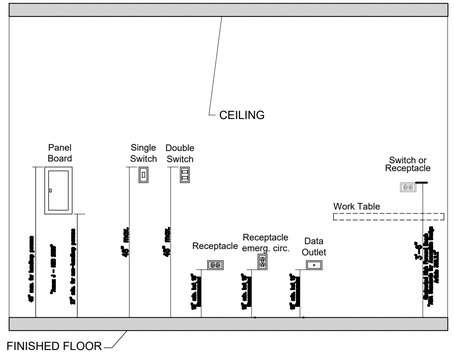


ADA 2010 STANDARD FOR ELECTRICAL RECEPTACLES AND SWITCHES

## GENERAL NOTES

1. ALL ELECTRICAL OUTLETS INDICATED IN DRAWINGS SHALL BE INSTALLED AS INDICATED.
2. ALL WIRES AND CABLES SHALL BE THWN/THHN-600V. INSULATION.
3. UNLESS OTHERWISE INDICATED ALL WIRES AND CABLES SHALL BE COPPER.
4. PROVIDE GROUND WIRE IN ALL THE CONDUITS.
5. PROVIDE #12-AWG GREEN JUMPER BETWEEN RECEPTACLE GROUNDING SCREW AND OUTLET BOX GROUNDING SCREW.
6. UNLESS OTHERWISE INDICATED ALL CONDUITS SHALL BE 3/4" IN DIAMETER MINIMUM.
7. ALL UNDERGROUND CONDUIT COUPLING SHALL BE WATERTIGHT.
8. PROVIDE AN EXPANSION JOINT COUPLING OF THE REQUIRED TYPE AND SIZE WHENEVER A CONDUIT CROSSES AN EXPANSION JOINT.
9. PROVIDE PLASTIC CONDUIT DIVIDERS IN ALL UNDERGROUND CONDUIT RUNS. MAXIMUM DISTANCE BETWEEN DIVIDERS TO BE 4'-0'.
10. CONTRACTOR MUST MAKE SURE THAT THE ENTIRE ELECTRICAL SYSTEM HAS GROUND CONTINUITY.
11. ALL THE ELECTRICAL INSTALLATION SHALL BE DONE IN A NEAT & WORKMANLIKE MANNER, ACCORDING TO THE LAST EDITION OF THE NATIONAL ELECTRICAL CODE, THE PUERTO RICO ELECTRIC POWER AUTHORITY LATEST STANDARD & THE PUERTO RICO TELEPHONE CO. LATEST PRACTICES.
12. THE CONTRACTOR SHALL VISIT THE JOB SITE AND BECOME ACQUAINTED WITH THE EXISTING FIELD CONDITIONS. IT SHALL BE THE DIRECT RESPONSIBILITY OF THE CONTRACTOR TO BRING PROMPTLY TO THE ATTENTION OF THE ENGINEER ANY DISCREPANCIES BETWEEN THE EXISTING FIELD CONDITIONS AND THOSE THAT WERE USED FOR DESIGN PURPOSES. THIS SHALL BE DONE BEFORE THE CONTRACTOR SUBMITS HIS BID, SO THAT THE ENGINEER CAN RENDER A DECISION ON THE MATTER BEFORE THE BIDS ARE RECEIVED. THE SUBMITTAL OF THE BID BY THE CONTRACTOR WILL BE HELD AS PROOF THAT CONTRACTOR UNDERSTANDS THROUGHLY AND COMPLETELY THE SCOPE OF THE WORK INVOLVED, HAS FAMILIARIZED HIM/HERSELF WITH THE EXISTING FIELD CONDITIONS, AND HAS INCLUDED IN HIS BID ALL THE ITEMS NECESSARY TO PERFORM THE ELECTRICAL WORK. NO ALLOWANCE WILL BE PERMITTED ON THIS MATTER AFTER THE BIDS ARE RECEIVED.
13. UNLESS OTHERWISE INDICATED ALL OUTLETS SHALL BE FLUSH MOUNTED AND SHALL HAVE THEIR OWN INDEPENDENT OUTLET BOXES. MINIMUM SIZE OF OUTLET BOX TO BE 4" SQUARE & 1 1/2" DEEP. EXACT SIZE OF OUTLET BOX SHALL BE DETERMINED ACCORDING TO THE MAXIMUM NUMBER OF CONDUCTORS IN THE BOX PER N.E.C. ARTICLE 314-SECTION 16. NOT FOR A/V PURPOSES.
14. ALL INDICATED HEIGHTS ARE FROM CENTER OF BOX TO FINISHED FLOOR.
15. CONTRACTOR SHALL BALANCE ALL LOADS.
16. ROUTE OF CONDUITS SHOWN IN THE LAYOUT IS SCHEMATIC AND INTENDED ONLY TO INDICATE INTERCONNECTIONS BETWEEN OUTLETS. EXACT CONDUIT ROUTING SHALL BE DETERMINED AT THE JOB SITE TO CONFORM WITH THE STRUCTURAL CONDITIONS AND SHALL BE SUBJECT TO THE FINAL APPROVAL OF THE ARCHITECT/ENGINEER.
17. LEAVE A #12-AWG-TW FISHWIRE IN ALL EMPTY CONDUITS.
18. ALL PANELBOARDS AND LOAD CENTERS SHALL BE PROVIDED WITH A FACTORY INSTALLED GROUND BUS FOR CONNECTING TO GROUND ALL THE GROUND WIRES OR CABLES ENTERING OR LEAVING THE PANELBOARD. THE GROUND BUS SHALL BE SIMILAR IN SIZE AND CHARACTERISTICS TO THE NEUTRAL BUS. ALL PANELBOARDS SHALL HAVE A MONOFLAT FRONT AND KEY LOCK.
19. WHEN TWO OR MORE WIRING DEVICES ARE SHOWN TOGETHER IN ADJACENT POSITIONS AND AT THE SAME HEIGHT, THEY SHALL BE INSTALLED IN A MULTIPLE GANG OUTLET BOX OF THE PROPER SIZE SO THAT ONLY ONE RAISED COVER PLATE OF THE REQUIRED TYPE AND SIZE ARE USED. 120V AND 277V OUTLETS SHALL BE IN SEPARATE BOXES. SHOULD THAT BE INDICATING SWITCHES.
20. UNLESS OTHERWISE INDICATED, ALL WIRING DEVICES SHALL BE WHITE COLORED WITH 302 STAINLESS STEEL COVER PLATES. EXCEPT THE WEATHERPROOF OUTLETS WHICH SHALL HAVE THEIR STANDARD GRAY COVER PLATES.
21. WHEN TWO OR MORE PANELBOARDS OR CABINETS ARE SHOWN TOGETHER IN ADJACENT LOCATIONS, THE TOP OF ALL PANELBOARDS OR CABINETS SHALL BE ALIGNED WITH THE TOP OF THE BIGGEST ONE SO THAT ALL THE TOPS ARE AT EXACTLY THE SAME HEIGHT FROM THE FINISHED FLOOR.
22. IN CONDUIT RUNS, THE NUMBER OF ARROWS DESIGNATE THE NUMBER OF CIRCUITS IN THE CONDUIT (ONE POLE IN THE PANELBOARD PER EACH CIRCUIT), THE NUMBER OF LINES DESIGNATE THE NUMBER OF CONDUCTORS IN THE CONDUIT , THE LONGER LINE BEING A NEUTRAL CONDUCTOR AND " 1 " BEING THE GROUND CONDUCTOR.
23. TELEPHONE TERMINALS CABINET SHALL BE APPROVED EQUAL TO COLUMBIA METAL TYPE "PF" WITH THE DOOR HINGES, LOCK AND 3/4" PLYWOOD BACKBOARD COVER AT THE BOTTOM OF THE CABINET.
24. IT SHALL BE THE RESPONSIBILITY OF THE CONTRACTOR TO VERIFY THE VOLTAGE CHARACTERISTICS AT THE SITE WITH LUMA AT THE TIME OF INSTALLATION BEFORE ORDERING ANY PRIMARY EQUIPMENT.
25. ALL WIRING DEVICES SHALL BE SPECIFICATION GRADE.
26. ALL THE SELF-STANDING AND SURFACE MOUNTED ELECTRICAL EQUIPMENT AS WELL AS THE RESTRAINT MANUAL GUIDELINES FOR MECHANICAL SYSTEMS. THE SAME APPLIES TO ALL THE CONDUIT WORK. THE DETAILS AND INSTALLATION METHODS IN SAID MANUAL SHALL BE MODIFIED AS REQUIRED TO FIT THE ELECTRICAL INSTALLATION OF THE PROJECT.
27. FOR FINAL LOCATION OF MECHANICAL EQUIPMENT SEE CORRESPONDING MECHANICAL AND ARCHITECTURAL DRAWINGS. CONTRACTOR TO RELOCATE ELECTRICAL ROUGH-IN ACCORDINGLY AT NO ADDITIONAL COST TO OWNER.
28. CONDUIT WORK:
    - A. ALL CONDUITS INSTALLED UNDERGROUND SHALL BE PVC SCHEDULE 40.
    - B. ALL CONDUITS INSTALLED EMBEDDED IN FLOOR SLABS WHICH ARE IN DIRECT CONTACT WITH THE EARTH SHALL BE PVC SCHEDULE 40.
    - C. ALL CONDUITS INSTALLED EMBEDDED IN WALLS, CEILING SLABS AND IN FLOOR SLABS WHICH ARE NOT IN DIRECT CONTACT WITH THE EARTH SHALL BE RIGID.
    - D. ALL CONDUITS INSTALLED IN THE AREA BETWEEN HUNG CEILINGS AND CEILING SLABS OR METAL DECKS SHALL BE RIGID.
    - E. ALL CONDUITS INSTALLED EXPOSED IN INDOOR AREAS SHALL BE RIGID.
    - F. ALL CONDUITS INSTALLED EXPOSED IN OUTDOOR AREAS SHALL BE RIGID GALVANIZED STEEL.
    - G. FINAL CONNECTIONS TO ALL MOTORS AND ELECTRICAL EQUIPMENT SHALL BE DONE WITH LIQUIDTIGHT FLEXIBLE STEEL CONDUIT.
29. ALL WIRES AND CABLES SHALL BE #12-AWG, EXCEPT WHEN OTHERWISE INDICATED IN THE : DRAWINGS, OR AS INDICATED BELOW FOR 20 AMPERES CIRCUITS. WIRE SIZING.

    A. ALL 20 AMPERES, 120VOLT CIRCUIT RUNS SHALL BE AS FOLLOWS:
    - 5' TO 100' IN LENGTH, #12-AWG.
    - 100' TO 200' IN LENGTH, #10-AWG.
    - 200' TO 300' IN LENGTH, #8-AWG.
    - 300' TO 400' IN LENGTH, #6-AWG.

    B. ALL 20 AMPERES, 277VOLT CIRCUIT RUNS SHALL BE AS FOLLOWS:
    - 5' TO 175' IN LENGTH, #12-AWG.
    - 176' TO 300' IN LENGTH, #10-AWG.
    - 301' TO 450' IN LENGTH, #8-AWG.
    - 451' TO 600' IN LENGTH, #6-AWG.
30. ALL PENDANT MOUNTED LUMINARIES SHALL BE INSTALLED USING STEMS, 2 STEMS PER EACH 4' LUMINARY. STEMS SHALL BE PAINTED OF THE COLOR REQUIRED BY THE ARCHITECT.
31. ALL PENETRATIONS THROUGH THE FLOORS, CONNECTING TWO OR MORE LEVELS SHALL BE FIRE RATED AND SMOKE TIGHT-SEALED IN ACCORDANCE WITH THE REQUIREMENTS OF IBC WITH APPROVED FIRE STOPPING MATERIALS.
32. THE CONTRACTOR SHALL CONSIDER IF THERE EXIST ANY ELECTRICAL DEVICE OR EQUIPMENT INSIDE THE WALL OR WALLS IN CONTRACT TO BE DEMOLSHED AND SHALL CONNECT THEM TO THE NEAREST ELECTRICAL FACILITY. BUT BEFORE THAT, THE CONTRACTOR SHALL VERIFY IF CIRCUITS DON'T HAVE ANY PROBLEMS OF POSSIBLE OVERLOAD.
33. NO "UF" TYPE CONDUCTOR ALLOWED. ALL DROPS TO FIXTURES AND EQUIPMENT TO BE DONE IN FLEXIBLE METALLIC CONDUIT, SIZE, MAXIMUM LENGTH AND TYPE AS PER NEC AND TO OTHER EQUIPMENT AS REQUIRED BY CODES.
34. ALL EQUIPMENT AND MATERIAL TO BE NEW, THROUGHOUT AND AS PER NEMA AND U.S. STANDARDS AND APPROXIMATELY LABELED ALSO FOR EXISTING EQUIPMENT.
35. CONTRACTOR SHALL COORDINATE ALL OF HIS WORK, SHIPPING OR CUTTING, ETC. WITH EXISTING SERVICES AND UTILITIES AND WITH OWNER, OWNER'S ENGINEER, LANDLORD OR REPRESENTATIVE. THE CONTRACTOR IS REQUIRED TO VISIT THE PROJECT AND REPORT HIS COMMENTS BEFORE BIDDING. OWNER'S GENERAL CONDITIONS SHALL FORM PART OF THIS PHASE.
36. EQUIPMENT TO BE SUPPLIED AND INSTALLED BY OWNER AND OTHER TRADES OR CONTRACTORS TO HAVE INTEGRAL OVERLOAD PROTECTION, DISCONNECTING MEANS AND GROUND FAULT PROTECTION WHERE REQUIRED. POWER FACTOR FOR ALL EQUIPMENT TO BE ABOVE REQUIRED BY THE PUERTO RICO ENERGY CODE.
37. CONTRACTOR TO SUBMIT FOR APPROVAL ALL EQUIPMENT, LIGHTING FIXTURES, BUS DUCTS, TRANSFORMERS, PANELS, CONDUITS, FITTINGS, RECEPTACLES AND ANY OTHER ELECTRICAL MATERIALS REQUIRED FOR THE WORK TO BE PERFORMED.
38. THE ELECTRICAL INSTALLATION, MATERIALS AND METHOD OF WORK SHALL BE IN COMPLETE ACCORDANCE WITH LATEST PREPA, NEC OF P.R., PRLD, OSHA, ARPE AND OTHER AGENCIE'S APPLICABLE CODES AND REGULATIONS FOR SAID TYPE OF WORK AND SHALL BE SUBMITTED TO OWNER FOR APPROVAL. COORDINATION WITH OWNER'S REPRESENTATIVE IS MANDATORY
39. ALL RECEPTACLES AND SWITCHES SHALL BE HEAVY DUTY SPECIFICATION GRADE OF THE COLOR TO BE CHOSEN BY ARCHITECT. ALL WALL PLATES TO BE HEAVY DUTY STAINLESS STEEL.
40. ALL CONDUITS SHALL BE SECURELY FASTENED TO OUTLET BOXES OR CABINETS WITH ONE BUSHING AND TWO LOCKNUTS, ONE INSIDE AND THE OTHER OUTSIDE THE BOX OR CABINET OR FIXTURE AND INSULATED BUSHING ON CONDUITS 1-1/4" DIAMETER AND LARGER SHALL BE USED.
41. CONTRACTOR TO COLOR CODE ALL WIRING AS SHOWN:
    - A. ALL FEEDERS AT 277/480 VOLTS TO BE ORANGE, YELLOW, BROWN.
    - B. ALL FEEDERS AT 120/208 VOLTS TO BE RED, BLUE, BLACK.
    - C. ALL SWITCH RETURNS TO BE PURPLE, VIOLET, LIGHT BLUE.
    - D. ALL NEUTRAL CONDUCTORS TO BE WHITE.
    - E. ALL GROUND CONDUCTORS TO BE GREEN.
42. COORDINATION IS MANDATORY IN THIS PROJECT. CONTRACTOR MUST COORDINATE ALL HIS WORK WITH ARCHITECT/ENGINEER AND OWNER'S REPRESENTATIVE.
43. CONTRACTOR TO SUPPLY ALL 120 VOLTS CONTROL NEEDS TO AIR CONDITIONING VALVES, CONTROL PANELS, DAMPERS VARIABLE VOLUME BOXES AND ANY ALL CONTROL VOLTAGE NEEDS AS PART OF THIS CONTRACT WHETHER SHOWN OR NOT ON THIS PLANS.
44. ALL DUCT SMOKE DETECTORS SHALL BE SUPPLIED BY ELECTRICAL CONTRACTOR AND INSTALLED IN DUCT BY DUCT SUPPLIER/INSTALLER. CONNECTION TO FIRE ALARM SYSTEM OF DUCT DETECTORS BY ELECTRICAL CONTRACTOR.
45. CONTRACTOR SHALL COMPLY WITH UNIFORM BUILDING CODE (UBC) FOR LIGHTING FIXTURE INSTALLATION IN HUNG CEILINGS FOR SEISMIC ZONE 3 COMPLIANCE. ALL FIXTURES TO HAVE CALIFORNIA CLIPS TO HOLD FIXTURES TO HUNG CEILING AND ALL FIXTURES TO BE INDEPENDENTLY SUPPORTED FROM THE STRUCTURE AS REQUIRED. UNIFORM BUILDING CODE STANDARD 25-2 DRESCRIBES CONSTRUCTION METHODS THAT MAY BE USED FOR LIGHT HEIGHT SUSPENDED CEILINGS. THESE STANDARDS SHALL BE USED AS GUIDE FOR SUPPORTING OF BOTH THE SUSPENDED CEILING AND THE LIGHTING FIXTURES.
46. REMOTE PHONE IN LOCKABLE CABINET. CABINET TO BE RED WITH SILK SCREENED DOOR WITH "LOCAL FIRE EMERGENCY PHONE". UNIT TO BE SIMPLEX 2084 - 9002. BOX TO BE 15" HIGH, 11-11/16" WIDE, 3-1/2" DEEP. ALL TO BE MOUNTED BOTTOM 42" AFF.
47. ADDRESSABLE DUCT SENSOR HOUSING WITH PHOTOELECTRIC SENSOR. ALL TO HAVE REMOTE STATUS/ALARM INDICATOR AND TEST STATION. CONTRACTOR TO COORDINATE WITH AIR CONDITIONING CONTRACTOR FOR DUCT WIDTH SIMPLEX 4098 - 9756. SEE GENERAL NOTE #18.
48. LAMPS TEMPERATURE COLOR MUST BE "4100 K".


Yo, Mildred Gisela Perez Rosado, Ingeniera licenciada y autorizada para ejercer la profesión de diseño, estos planos y las especificaciones correspondientes fueron preparados bajo mi supervisión; que dichos planos y especificaciones cumplen con el Reglamento para Regular la Profesión de Ingeniería y Agrimensura, el Reglamento de Construcciones Públicas con jurisdicción. Certifico, además, que dichos planos y especificaciones cumplen con las especificaciones se ha cumplido cabalmente con lo dispuesto en la Ley Núm. 454 de 4 de enero de 2004, según enmendada, conocida como la "Ley para la Inversión por la Industria Puertorriqueña" y con el Reglamento Núm. 6765 de 8 de julio de 2004, según enmendado, conocido como el "Reglamento para la Inversión por la Industria Puertorriqueña". Cualquier declaración falsa o falsificación de los hechos con el fuyo producido por desconocimiento o por cualquier otra causa, por mi persona o por mis empleados, o por otras personas con mi consentimiento, será motivo suficiente para iniciar acción judicial y disciplinaria por la OCPe.


CERTIFIED:

arqu