CERTAIN ITEMS IN THE LEGEND BELOW MAY NOT APPLY TO THIS PROJECT.

HVAC DUCTWORK LEGEND

	SUPPLY AIR DUCT
	RETURN OR OUTSIDE AIR DUCT
	EXHAUST AIR DUCT
	4-WAY CEILING DIFFUSER
	DUCT TRANSITION
	MANUAL BALANCING DAMPER
FD	FIRE DAMPER
SD	SMOKE DAMPER
FSD	FIRE/SMOKE DAMPER
M	MOTORIZED DAMPER
TS	DUCT TEMPERATURE SENSOR
H	DUCT HUMIDITY SENSOR
DP	DIFFERENTIAL PRESSURE SWITCH
SD	SMOKE DETECTOR (BY ELECTRICAL)
SP	STATIC PRESSURE SENSOR
SW	MANUAL TIMER ON/OFF SWITCH
CO2	C02 SENSOR
TS	TEMPERATURE SENSOR
T	THERMOSTAT
T1 XXX	ROOM TEMPERATURE SENSOR (ADJUSTABLE) "XXX" = VAV BOX SERVED
T2 XXX	ROOM TEMPERATURE & HUMIDITY SENSOR (ADJ) "XXX" = VAV BOX SERVED
T3 XXX	ROOM TEMP, CO2, & HUMIDITY SENSOR (ADJ) "XXX" = VAV BOX SERVED
T4 XXX	ROOM NON-ADJUSTABLE TEMPERATURE SENSOR "XXX" = VAV BOX SERVED
	AIRFLOW
UC	DOOR UNDERCUT
	RECTANGULAR DUCT BREAK
	EXISTING TO REMAIN
	EXISTING TO BE REMOVED
	NEW
	CONNECT TO EXISTING
	LIMIT OF DEMOLITION
	CEILING ACCESS PANEL

ENVELOPE CONSTRUCTION PROPERTIES

PUERTO RICO INTERNATIONAL ENERGY CONSERVATION CODE (PRECC--2018 – Climate Zone 1)

DESCRIPTION	VALUES
ROOF Insulation entirely above deck Metal Building Attic and other	U = 0.048 / R = 20 (c.i.) Min. U = 0.048 / R = 20 Min. U = 0.027 / R = 38 Min.
WALLS Masonry Metal Building Metal Frame	U = 0.58 / R = N.R. U = 0.078 / R = 13 Min. U = 0.078 / R = 13 Min.
WINDOWS Fixed fenestration Operable fenestration Entrance doors Metal operable fenestration	U = 1.20 Max. SC = 0.29 / SGHF = 0.25 Max. U = 1.20 Max. SC = 0.29 / SGHF = 0.25 Max. U = 1.20 Max. SC = 0.29 / SGHF = 0.25 Max. U = 0.53 Max.
SKYLIGHTS	U = 0.75 Max. SC = 0.40 / SGHF = 0.35 Max.
DOORS (OPAQUE) Non-swinging Swinging Garage door < 14% glazing	U = 1.54 Max. U = 1.45 Max. U = 1.45 Max.

U = Heat Transfer Coefficient — R = Insulation Value
SC = Shading Coefficient — N/A = Not Applicable
SHGF = Solar Heat Gain Factor — N.R. = Not Required
LS = Linear System — c.i. = Continuous Insulation

NOTES:
1. VALUES DIFFERING FROM SHOWN WILL REQUIRE REVISION OF AIR CONDITIONING LOADS.

FJM Engineering, psc
Consulting Engineers
352 San Claudio St., STE 1, PMB 367, San Juan, PR 00926-4144
Tel: (787) 722-4641 / Cel: (787) 632-1494
E-mail: FMate@fjm-eng.com

CERTAIN ABBREVIATIONS LISTED BELOW MAY NOT APPLY TO THIS PROJECT.

HVAC ABBREVIATIONS

AAV	AUTOMATIC AIR VENT	F	FARENHEIT	PSI	POUNDS PER SQUARE INCH
AC	ALTERNATING CURRENT	FCU	FAN COIL UNIT	PSIG	POUNDS PER SQUARE INCH GAUGE
ACB	ACTIVE CHILLED BEAM	FD	FIRE DAMPER	PVC	POLYVINYL CHLORIDE
ACC	AIR COOLED CHILLER	FDA	U.S. FOOD AND DRUG ADMINISTRATION	R	RELOCATED
ACD	AUTOMATIC CONTROLLED DAMPER	FF	FINISHED FLOOR	RA	RETURN AIR
ACCU	AIR COOLED CONDENSING UNIT	FG	FINISHED GRADE	REQ'D	REQUIRED
ACU	AIR CONDITIONING UNIT	FLA	FULL LOAD AMPS	RF	RETURN FAN
AD	ACCESS DOOR	FLEX	FLEXIBLE	RG	RETURN GRILLE
ADJ	ADJUSTABLE	FPB	FAN POWERED BOX	RH	RELATIVE HUMIDITY
AFF	ABOVE FINISHED FLOOR	FPM	FEET PER MINUTE	RHC	REHEAT COIL
AFG	ABOVE FINISHED GRADE	FT	FLASH TANK	RHG	REFRIGERANT HOT GAS
AHRI	AIR-CONDITIONING, HEATING, AND REFRIGERATION INSTITUTE	F&T	FLOAT & THERMOSTATIC	RL	REFRIGERANT LIQUID
		FTR	FIN TUBE RADIATION	RM	ROOM
AHU	AIR HANDLING UNIT	G	GAS	RPM	REVOLUTIONS PER MINUTE
AMCA	AIR MOVEMENT AND CONTROL ASSOCIATION	GA	GAUGE	RR	RETURN REGISTER
		GAL	GALLON	R&R	REMOVE AND RELOCATE
ANSI	AMERICAN NATIONAL STANDARDS INSTITUTE	GALV	GALVANIZED	RS	REFRIGERANT SUCTION
		GPH	GALLONS PER HOUR	RTD	RESISTSANCE TEMPERATURE DETECTOR
AP	ACCESS PANEL	GPM	GALLONS PER MINUTE	RTU	ROOF TOP UNIT
APD	AIR PRESSURE DROP	HB	HOSE BIB (CONNECTION)	SA	SUPPLY AIR
ASJ	ALL SERVICE JACKET	HX	HEAT EXCHANGER	SD	SMOKE DAMPER
ASME	AMERICAN SOCIETY OF MECHANICAL ENGINEERS	HP	HORSEPOWER	SEN	SENSIBLE
		HPS	HIGH PRESSURE STEAM	SF	SUPPLY FAN
ASTM	AMERICAN SOCIETY FOR TESTING AND MATERIALS	HUM	HUMIDIFIER	SFD	COMBINATION SMOKE AND FIRE DAMPER
		HVAC	HEATING VENTILATION AND AIR CONDITIONING	SMACNA	SHEET METAL AND AIR CONDITIONING CONTRACTORS NATIONAL ASSOCIATION
BAS	BUILDING AUTOMATION SYSTEM				
BD	BACK-DRAFT DAMPER	HWR	HOT WATER RETURN	SP	STATIC PRESSURE
BFF	BELOW FINISHED FLOOR	HWS	HOT WATER SUPPLY	SR	SUPPLY REGISTER
BFG	BELOW FINISHED GRADE	HZ	HERTZ	SQ	SQUARE
BHP	BRAKE HORSE POWER	IAQ	INDOOR AIR QUALITY	SQ FT	SQUARE FEET
BOD	BOTTOM OF DUCT	ID	INSIDE DIAMETER	STD	STANDARD
BTU	BRITISH THERMAL UNIT	IFB	INTEGRAL FACE AND BYPASS	STM	STEAM
BTUH	BTU PER HOUR	IN	INCHES	T	THERMOSTAT
C	CELSIUS	I/O	INPUT/OUTPUT	TCP/IP	TRANSMISSION CONTROL PROTOCOL/INTERNET PROTOCOL
CD	CEILING DIFFUSER	KW	KILOWATT		
CF	CUBIC FEET	LAT	LEAVING AIR TEMPERATURE	TD	TRANSFER AIR DUCT
CFM	CUBIC FEET PER MINUTE	LBS	POUNDS	TEAO	TOTALLY ENCLOSED AIR OVER
CH	CHILLER (WATER-COOLED)	LD	LINEAR DIFFUSER	TEFC	TOTALLY ENCLOSED FAN COOLED
CHW	CHILLED WATER	LPS	LOW PRESSURE STEAM	TEMP	TEMPERATURE
CHWP	CHILLED WATER PUMP	LVR	LOUVER	TG	TRANSFER GRILLE
CHWR	CHILLED WATER RETURN	LWT	LEAVING WATER TEMPERATURE	TON	12,000 BTU (COOLING CAPACITY)
CHWS	CHILLED WATER SUPPLY	MA	MAKE-UP AIR OR MILLIAMPS	TYP	TYPICAL
CM	CENTIMETERS	MAU	MAKE-UP AIR UNIT	UC	UNDER COUNTER
CO	CARBON MONOXIDE	MAX	MAXIMUM	UH	UNIT HEATER
CONN	CONNECTION	MBH	1000 BTUH	UL	UNDERWRITERS LABRATORIES
CT	COOLING TOWER	MC	MECHANICAL CONTRACTOR	V	VOLTS
CUH	CABINET UNIT HEATER	MERV	MINIMUM EFFICIENCY REPORTING VALUE	VA	VOLT AMPS
CWP	CONDENSER WATER PUMP	MIN	MINIMUM	VAV	VARIABLE AIR VOLUME
CWR	CONDENSER WATER RETURN	MM	MILLIMETERS	VFD	VARIABLE FREQUENCY DRIVE
CWS	CONDENSER WATER SUPPLY	MPH	MILES PER HOUR	VTR	VENT THRU ROOF
D	DRAIN	N	NEW WORK	VVT	VARIABLE VOLUME AND TEMPERATURE
DB	DRY BULB	NC	NORMALLY CLOSED	WB	WET BULB
DC	DIRECT CURRENT	NEC	NATIONAL ELECTRIC CODE	WC	WATER COLUMN
DDC	DIRECT DIGITAL CONTROL	NEMA	NATIONAL ELECTRIC MANUFACTURERS ASSOCIATION	WFS	WATER FLOW SWITCH
DEG	DEGREE			WG	WATER GAUGE
DIA	DIAMETER	NFPA	NATIONAL FIRE PROTECTION ASSOCIATION	WPD	WATER PRESSURE DROP
DIM	DIMENSION	NIC	NOT IN CONTRACT		
DN	DOWN	NC	NORMALLY CLOSED		
DP	DIFFERENTIAL PRESSURE	NO	NORMALLY OPEN		
D&R	DISCONNECT & REMOVE	NPS	NOMINAL PIPE SIZE		
DWG(S)	DRAWING(S)	NPT	NATIONAL PIPE THREAD		
DWH	DOMESTIC WATER HEATER	OA	OUTSIDE AIR		
E	EXISTING	OD	OUTSIDE DIAMETER		
EA	EXHAUST AIR	ODP	OPEN DRIP PROOF		
EAT	ENTERING AIR TEMPERATURE	OSHA	OCCUPATIONAL SAFETY AND HEALTH ADMINISTRATION		
EC	ELECTRICAL CONTRACTOR				
EF	EXHAUST FAN	OS&Y	OUTSIDE SCREW AND YOKE		
EPDM	ETHYLENE PROPYLENE DIENE MONOMER	PCB	PASSIVE CHILLED BEAM		
		PCF	POUNDS PER CUBIC FOOT		
ER	EXHAUST REGISTER	PD	PRESSURE DROP		
ERU	ENERGY RECOVERY UNIT	PDF	PORTABLE DOCUMENT FORMAT		
EUH	ELECTRIC UNIT HEATER	PRV	PRESSURE REDUCING VALVE		
EWT	ENTERING WATER TEMPERATURE				
EXH	EXHAUST				

APPLICABLE MECHANICAL CODES

1. THIS LIST IS NOT INCLUSIVE OF ALL CODES AND STANDARDS THAT MAY OR MAY NOT APPLY TO THIS PROJECT.

2. PERFORM WORK SPECIFIED IN SPECIFICATIONS IN ACCORDANCE WITH STANDARDS LISTED BELOW INCLUDING AMENDMENTS OR REVISIONS. WHEN THESE SPECIFICATIONS ARE MORE STRINGENT, THEY TAKE PRECEDENCE. IN CASE OF CONFLICT, OBTAIN A DECISION FROM THE DESIGNER.

NATIONAL GUARD PAMPHLET (NG PAM) 415-5, ARMY NATIONAL GUARD MILITARY CONSTRUCTION PROGRAM EXECUTION, 31 JULY 2003 OR CURRENT EDITION

NGR 415-10, CHAPTER 5, ARMY NATIONAL GUARD FACILITIES CONSTRUCTION, 25 JULY 2003 OR CURRENT EDITION

NG PAM 415-12, ARMY NATIONAL GUARD FACILITIES ALLOWANCES, 01 JUNE 2011

DG 415-5, ARMY NATIONAL GUARD GENERAL FACILITIES INFORMATION DESIGN, 01 JUNE 2011

UNITED FACILITIES CRITERIA (UFC) 4-720-01 LODGING FACILITIES

UFC 1-200-01 DOD BUILDING CODE

INTERNATIONAL BUILDING CODE, CURRENT EDITION

PUERTO RICO BUILDING CODE, 2018 OR ADOPTED EDITION

ASHRAE STANDARD 90.1 - ENERGY STANDARD FOR BUILDINGS EXCEPT LOW-RISE RESIDENTIAL BUILDINGS (2016)

ASHRAE STANDARD 62.1 - VENTILATION FOR ACCEPTABLE INDOOR AIR QUALITY (2017)

ASHRAE STANDARD 55 - THERMAL ENVIRONMENTAL CONDITIONS FOR HUMAN OCCUPANCY (2013)

MECHANICAL SYSTEMS SUMMARY TABLE

PROJECT NAME:	FORT ALLEN TRAINING CENTER - RESTORATION & REPAIR OF BUILDING 149
PROJECT OWNER:	ARMY NATIONAL GUARD
PROJECT ADDRESS:	2G43, AVE A, MERCEDITA, JUANA DIAZ, PR 00715
PROJECT SIZE:	APPROX: 10,600 SF
DESIGN CRITERIA	
ROOF R-VALUE:	20
WALL R-VALUE:	3.24 (EXISTING / ESTIMATED)
WINDOW U-VALUE: SHGC:	1.08 BTU/(hr x ft^2 x°F) 0.62

OUTDOOR SUMMER DESIGN CONDITIONS DB / WB:	89.8°F / 77.8°F
OUTDOOR WINTER DESIGN CONDITIONS DB:	71.0
INDOOR SUMMER DESIGN CONDITIONS DB/%RH:	75 / 50%
INDOOR WINTER DESIGN CONDITIONS DB:	70
HVAC SIZING METHOD: HAP COMPUTER PROGRAM + SUPPLEMENTAL CALCULATIONS	
TOTAL COOLING REQUIRED WITH VENTILATION AIR:	221.9 MBH
TOTAL SENSIBLE GAIN:	173.0 MBH
TOTAL LATENT GAIN:	48.9 MBH
TOTAL RELATIVE HUMIDITY (%RH)	50%
TOTAL GRAINS/LB DIFFERENCE:	12.0
TOTAL HEATING REQUIRED WITH VENTILATION AIR:	-

MECHANICAL SHEET INDEX

SHEET NUMBER	SHEET NAME
M-00	MECHANICAL SYMBOLS, LEGEND & NOTES
M-01	MECHANICAL SPECIFICATIONS
M-02	MECHANICAL HVAC PLAN - FIRST & SECOND FLOOR
M-03	MECHANICAL HVAC PLAN - ROOF
M-04	MECHANICAL DETAILS
M-05	CONTROL DIAGRAMS
M-06	MECHANICAL SCHEDULES

MECHANICAL SCOPE OF WORK:

1. PROVIDE NEW PACKAGED TERMINAL AIR CONDITIONERS FOR ROOMS, LAUNDRIES, ETC., AS SHOWN. CAPACITY AND VOLTAGE AS SCHEDULED.
2. PROVIDE NEW CENTRAL EXHAUST SYSTEM FOR BATHROOMS, LAUNDRIES, ETC., AS SHOWN ON PLANS. INSTALL NOA LISTED, SEISMIC RATED ROOFTOP MOUNTED EXHAUST FAN. PROVIDE ROOF CURB, ROOF FLASHING, AND ALL REQUIRED APPURTENANCES.
3. PROVIDE CEILING MOUNTED EXHAUST FAN FOR JANITOR SINK ROOM.
4. PROVIDE SPLIT SYSTEM AC UNIT FOR SERVER ROOM.
5. PROVIDE VENTING FOR CLOTHES DRYERS, AS SHOWN.

GENERAL MECHANICAL NOTES:

1. THE CONTRACTOR SHALL CAREFULLY EXAMINE THE PROJECT SITE AND SURROUNDING AREAS AND MAKE ALL NECESSARY INVESTIGATIONS REQUIRED TO INFORM THEMSELVES AS TO ALL DIFFICULTIES THAT MAY BE ENCOUNTERED IN THE EXECUTION OF THE SCOPE OF WORK, AS DEPICTED IN THE CONTRACT DOCUMENTS.
2. THE CONTRACTOR SHALL EXAMINE ALL DRAWINGS, SPECIFICATIONS, AND ALL OTHER DATA OR INSTRUCTIONS PERTAINING TO THE WORK, REGARDLESS OF WHAT DRAWING IT MAY APPEAR ON OR IN WHICH SPECIFICATION IT IS DESCRIBED. THE CONTRACTOR WILL NOT BE ALLOWED EXTRA COMPENSATION RESULTING FROM THE CONTRACTOR'S FAILURE TO FULLY EXAMINE ALL THE DRAWINGS, SPECIFICATIONS, DATA, AND INSTRUCTIONS.
3. WITH THE EXCEPTION OF SYSTEMS AND EQUIPMENT FURNISHED BY OWNER, IF SPECIFIED, IT IS INTENDED THAT WORK COVERED BY THESE DRAWINGS AND SPECIFICATIONS INCLUDE EVERYTHING REQUISITE TO MAKE THE VARIOUS SYSTEMS COMPLETE AND OPERATIVE, IRRESPECTIVE OF WHETHER OR NOT EVERY ITEM IS SPECIFICALLY PROVIDED FOR. ANY OMISSION OF DIRECT REFERENCE TO ANY ESSENTIAL ITEM SHALL NOT RELIEVE THE CONTRACTOR'S RESPONSIBILITY TO PROVIDE A COMPLETE FULL FUNCTIONING INSTALLATION.
4. DIMENSIONS SHALL BE FIELD-VERIFIED AND COORDINATED PRIOR TO PROCUREMENT OR FABRICATION. COORDINATE THE WORK WITH OTHER TRADES INVOLVED. FIELD MODIFICATIONS, SUCH AS OFFSETS IN PIPING OR DUCTWORK, NEEDED DUE TO OBSTRUCTIONS OR INTERFERENCES SHALL BE PROVIDED AT NO ADDITIONAL COST. FOR PROJECTS INVOLVING RENOVATION, COORDINATE NEW WORK WITH EXISTING ELEMENTS SUCH AS THE BUILDING STRUCTURE AND ARCHITECTURAL FEATURES, SPRINKLER PIPING, LIGHT, PLUMBING, AND ELECTRICAL CONDUIT.
5. THE LOCATIONS OF ALL ITEMS SHOWN ON THE DRAWINGS OR CALLED FOR IN THE SPECIFICATIONS THAT ARE NOT DEFINITELY FIXED BY DIMENSIONS ARE BEST APPROXIMATES ONLY. THE EXACT LOCATIONS NECESSARY TO SECURE THE BEST CONDITIONS AND RESULTS MUST BE DETERMINED BY THE PROJECT SITE CONDITIONS AND SHALL HAVE THE APPROVAL OF THE ENGINEER BEFORE BEING INSTALLED. DO NOT SCALE DRAWINGS.
6. MANUAL VOLUME DAMPERS SHALL BE PROVIDED AT ALL RUNOUTS TO SUPPLY AIR DIFFUSERS, RETURN AIR REGISTERS, EXHAUST GRILLES, AND ELSEWHERE NOTED ON PLANS AND IN SPECIFICATIONS FOR BALANCING SYSTEM. DAMPERS IN REGISTERS, GRILLES, AND DIFFUSERS ARE PROVIDED FOR FINAL ADJUSTMENTS DURING TEST AND BALANCING. DO NOT RELY ON DISTRIBUTION DEVICE DAMPERS FOR SYSTEM BALANCING.
7. PROVIDE AIR TURNING VANES IN ALL 90 DEGREE RECTANGULAR DUCT ELBOWS.
8. LOCATE THERMOSTATS, TEMPERATURE SENSORS, HUMIDISTATS, AND HUMIDITY SENSORS AT 48" ABOVE FINISHED FLOOR, UNLESS NOTED OTHERWISE. COORDINATE LOCATIONS WITH OTHER EQUIPMENT, FURNITURE, AND DOOR SWINGS.
9. ALL EQUIPMENT, DUCTWORK, ETC., SHALL BE SUPPORTED AS DETAILED AND/OR SPECIFIED. PROVIDE ADDITIONAL SUPPORTS AS REQUIRED TO PROVIDE A VIBRATION-FREE, RIGID INSTALLATION.
10. ALL DUCT SIZES SHOWN ARE INSIDE CLEAR DIMENSIONS.
11. DAMPERS AND INSIDES OF DUCTS VISIBLE THROUGH GRILLES, REGISTERS, AND DIFFUSERS SHALL BE PAINTED FLAT BLACK.
12. COORDINATION OF ALL TRADES IS OF THE OUTMOST IMPORTANCE. CEILING SPACE TO ROUTE WORK IN IS MINIMAL AT BEST. CONTRACTOR SHALL LAY OUT SYSTEMS IN CONJUNCTION WITH ALL TRADES TO AVOID CONFLICTS PRIOR TO INSTALLATION OF WORK.
13. ACCESS PANELS IN DUCTWORK AND CEILINGS SHALL BE PROVIDED WHERE REQUIRED FOR OPERATION, BALANCING, OR MAINTENANCE OF ALL MECHANICAL EQUIPMENT.
14. ALL DUCTWORK AND PIPING IS SHOWN SCHEMATICALLY. PROVIDE ALL TRANSITIONS, TURNING VANES, ELBOWS, FITTINGS, ETC., TO ALLOW FOR SMOOTH FLOWS.
15. VERIFY FINISHES WITH ARCHITECT PRIOR TO PURCHASING GRILLES, REGISTERS, DIFFUSERS, LOUVERS, AND OTHER AIR DISTRIBUTION DEVICES.
16. PROVIDE FLEXIBLE DUCT CONNECTIONS ON ALL DUCTWORK CONNECTING TO EACH FAN, AIR HANDLING UNITS, AND FAN COIL UNITS.
17. PROVIDE TRANSITIONS AT DIFFUSER NECKS AS REQUIRED TO MATCH SIZE OF FLEX DUCTS TO BE CONNECTED.
18. INTERRUPTIONS TO EXISTING SERVICES SHALL BE SCHEDULED FOR TIMES OTHER THAN NORMAL OPERATING HOURS. SUCH INTERRUPTIONS TO SERVICES SHALL NOT BE MADE WITHOUT THE PRIOR WRITTEN CONSENT OF THE OWNER'S REPRESENTATIVE AND PROPER COORDINATION WITH OTHER TRADES. PRE-WORK SHALL BE PERFORMED TO MAKE THE SHUTDOWN PERIOD AS BRIEF AS POSSIBLE.
19. ALL EQUIPMENT, DUCTWORK, ETC., TO BE REMOVED SHALL REMAIN PROPERTY OF THE OWNER OR DISPOSED OF LEGALLY, AS DIRECTED BY OWNER.
20. MAINTAIN CLEARANCE OF A MINIMUM OF 6" BETWEEN DUCTWORK, PIPING, EQUIPMENT, ETC., AND ALL FIRE RATED AND FIRE/SMOKE RATED PARTITIONS, TO ALLOW FOR INSPECTION OF RATED WALLS.
21. DUCT RUNOUTS TO DIFFUSERS SHALL MATCH THE SIZE OF THE DIFFUSER NECK.
22. FOR EXACT LOCATION OF DIFFUSERS AND GRILLES, SEE ARCHITECTURAL REFLECTED CEILING PLANS.
23. THE CONTRACTOR SHALL KEEP ON THE JOB ONE COMPLETE SET OF CONTRACT WORKING DOCUMENTS ON WHICH HE SHALL RECORD ANY DEVIATIONS OR CHANGES FROM SUCH CONTRACT DRAWINGS MADE DURING CONSTRUCTION. THE RECORD DRAWINGS SHALL SHOW CHANGES TO SIZE, TYPE, CAPACITY, ETC., OF ANY MATERIAL. UPON COMPLETION AND FINAL ACCEPTANCE OF THE PROJECT, THE CONTRACTOR SHALL PROVIDE THE OWNER WITH TWO (2) SETS OF "AS BUILT" DRAWINGS.
24. THE CONTRACTOR MAY OFFER SUBSTITUTIONS WITH HIS BID, EXCEPT CERTAIN ITEMS WHICH MAY BE INDICATED AS HAVING NO SUBSTITUTE. ONLY ONE REQUEST FOR SUBSTITUTION WILL BE CONSIDERED FOR EACH PRODUCT. WHEN THE SUBSTITUTION IS NOT ACCEPTED, THE SPECIFIED PRODUCT SHALL BE PROVIDED.
25. THE CONTRACTOR WILL BE HELD RESPONSIBLE FOR DAMAGE CAUSED BY HIS WORK OR THROUGH NEGLECT OF HIS WORKMEN. REPAIRING OF DAMAGED WORK SHALL BE DONE BY THE CONTRACTOR AS DIRECTED BY THE OWNER. COST OF REPAIRS SHALL BE PAID BY THE CONTRACTOR.
26. THE CONTRACTOR SHALL TEST ALL SYSTEMS, EQUIPMENT, AND WORK IN PRESENCE OF THE OWNER'S REPRESENTATIVE. ALL EQUIPMENT, FIXTURES, APPARATUS, ETC., SHALL COMPLY WITH THE REQUIREMENTS OF THE SPECIFICATIONS AND DRAWINGS.
27. THE CONTRACTOR SHALL WARRANT ALL MATERIALS AND ALL WORK PERFORMED AS PART OF THIS SCOPE OF WORK, INCLUDING THAT WHICH IS PERFORMED BY SUBCONTRACTORS, FOR A PERIOD OF ONE YEAR FROM DATE OF FINAL ACCEPTANCE.
28. PRIOR TO FINAL ACCEPTANCE, THE CONTRACTOR SHALL CLEAN ALL EQUIPMENT AND SYSTEMS TO THE SATISFACTION OF THE OWNER'S REPRESENTATIVE.
29. EXHAUST ONLY ROOMS SUCH AS JANITOR CLOSETS, ELECTRICAL CLOSETS, STORAGE ROOMS, ETC., SHALL HAVE DOOR UNDERCUTS OF 3/4" FOR MAKEUP AIR INDICATED ON PLANS. COORDINATE WITH ARCHITECTURAL DRAWINGS.
30. MECHANICAL EQUIPMENT AN PIPING INSTALLED ON ROOF SHALL BE SECURED TO MEET PRBC WIND LOADING REQUIREMENTS.

FRANCISCO J. MATE INGENIERO LICENCIADO LIC. #13947 PUERTO RICO

CODE COMPLIANCE: THIS PROJECT HAS BEEN DESIGNED IN ACCORDANCE WITH THE PUERTO RICO EXISTING BUILDING CODE 2018 EDITION. CONTRACTORS ARE NOT ALLOWED TO MAKE CHANGES TO THIS PROJECT WITHOUT WRITTEN AUTHORIZATION OF THE ARCHITECT OF RECORD.

Yo, Francisco J. Maté Cabrera, Lic. #13947, certifico que soy el profesional que diseñó estos planos y las especificaciones complementarias. Certifico además que estos planos y especificaciones cumplen con las disposiciones aplicables del Reglamento Conjunto y los Códigos de Construcción Vigentes de las Corporaciones Públicas con jurisdicción Carolfico, además, que en la preparación de estos planos y especificaciones se cumplió con lo dispuesto en la Ley Núm. 114 de 8 de enero de 2004, según enmendada, conocida como la "Ley para la Seguridad, Salud y Bienestar General" y con la [Ley Núm. 319 de 15 de mayo de 1938, según enmendada; Ley Núm. 96 de 6 de julio de 1988, según enmendada, conocida como la "Ley de Propiedad Intelectual de Arquitectura". Reconozco que cualquier declaración falsa o falsificación de los hechos que se haya producido por mí, mis agentes o empleados, o por otras personas con mi conocimiento, me hacen responsable de la acción disciplinaria y/o judicial y disciplinaria por la OGPe.

CERTIFIED:

arquiteg
ARQUITECTOS
INGENIEROS
PLANIFICADORES

CONSTRUCTION AND FACILITIES MANAGEMENT OFFICE

PUERTO RICO ARMY NATIONAL GUARD
#552 BORINQUENEER TRAIL, FORT BUCHANAN, PUERTO RICO 00934

PROJECT:
RESTORATION REPAIR OF BUILDING 149, FATC I P/N: 432122
FORT ALLEN TRAINING CENTER, JUANA DIAZ, PUERTO RICO

NO.	DESCRIPTION	DATE
	REVISIONS	

100% BIDDING SET
NOT FOR CONSTRUCTION
BY: V.M.V. DATE: NOV 04, 2024

DESIGN:
VICTOR M. VILLEGAS
ANDRÉS M. VILLEGAS
GILBERTO A. MENDOZA
CARLA G. VILLARRUBIA
ELIAS VALDES
MARIELA SUÁREZ
JUAN CAMILO OSORIO

SUPERVISOR:
VICTOR SANCHEZ, P.E.

SHEET NUMBER:
M-00

SHEET TITLE:
MECHANICAL SYMBOLS, LEGEND, AND NOTES

SHEET: TOTAL SHEETS: OF

MECHANICAL SPECIFICATIONS

METAL DUCTS

A. SINGLE WALL RECTANGULAR DUCTS AND FITTINGS

GENERAL FABRICATION REQUIREMENTS: COMPLY WITH SMACNA'S "HVAC DUCT CONSTRUCTION STANDARDS - METAL AND FLEXIBLE BASED," ON INDICATED STATIC-PRESSURE CLASS UNLESS OTHERWISE INDICATED.

EXHAUST DUCTWORK UPSTREAM OF FANS TO MEET SMACNA NEGATIVE PRESSURE 2 INCHES W.G. CONSTRUCT DUCTWORK DOWNSTREAM OF FANS TO MEET SMACNA POSITIVE PRESSURE OF 2 INCHES W.G.

FOR RESTROOM EXHAUST DUCTWORK THAT IS LOCATED EXTERIOR TO THE BUILDING, DUCTWORK SHALL BE MINIMUM #18 GAUGE WITH LONGITUDINAL AND TRANSVERSE JOINTS WELDED OR SEALED AIRTIGHT WITH WEATHERPROOF HEAVY LIQUID SEALANT APPLIED ACCORDING TO MANUFACTURER'S INSTRUCTIONS.

1. CONSTRUCT DUCTS OF GALVANIZED SHEET STEEL UNLESS OTHERWISE INDICATED.
2. TRANSVERSE JOINTS: FABRICATE JOINTS IN ACCORDANCE WITH SMACNA'S "HVAC DUCT CONSTRUCTION STANDARDS - METAL AND FLEXIBLE," FIGURE 2-1, "RECTANGULAR DUCT/TRAVERSE JOINTS," FOR STATIC PRESSURE CLASS, APPLICABLE SEALING REQUIREMENTS, MATERIALS INVOLVED, DUCT SUPPORT INTERVALS, AND OTHER PROVISIONS.
3. LONGITUDINAL SEAMS: SELECT SEAM TYPES AND FABRICATE IN ACCORDANCE WITH SMACNA'S "HVAC DUCT CONSTRUCTION STANDARDS - METAL AND FLEXIBLE," FIGURE 2-2, "RECTANGULAR DUCT/LONGITUDINAL SEAMS," FOR STATIC PRESSURE CLASS, APPLICABLE SEALING REQUIREMENTS, MATERIALS INVOLVED, DUCT SUPPORT INTERVALS, AND OTHER PROVISIONS.

B. SHEET METAL MATERIALS

1. GENERAL MATERIAL REQUIREMENTS: COMPLY WITH SMACNA'S "HVAC DUCT CONSTRUCTION STANDARDS - METAL AND FLEXIBLE," FOR ACCEPTABLE MATERIALS, MATERIAL THICKNESS, AND DUCT CONSTRUCTION METHODS. SHEET METAL MATERIALS ARE TO BE FREE OF PITTING, SEAM MARKS, ROLLER MARKS, STAINS, DISCOLORATION, AND OTHER IMPERFECTIONS.
2. GALVANIZED SHEET STEEL: COMPLY WITH ASTM A653/A653M.
   2.1. GALVANIZED COATING DESIGNATION: G60.

C. SEALANT AND GASKETS

1. GENERAL SEALANT AND GASKET REQUIREMENTS: SURFACE-BURNING CHARACTERISTICS FOR SEALANTS AND GASKET ARE TO BE MAXIMUM FLAME-SPREAD INDEX OF 25 AND A MAXIMUM SMOKE-DEVELOPED INDEX OF 50 WHEN TESTED IN ACCORDANCE WITH UL 723; CERTIFIED BY AN NRTL. SEAL ALL LONGITUDINAL AND TRANSVERSE DUCTWORK JOINTS AIRTIGHT TO MEET SMACNA SEAL CLASS A.
2. TWO-PART TAPE SEALING SYSTEM:
   2.1. TAPE: WOVEN COTTON FIBER IMPREGNATED WITH MINERAL GYPSUM AND MODIFIED ACRYLIC/SILICONE ACTIVATOR TO REACT EXOTHERMICALLY WITH TAPE TO FORM HARD, DURABLE, AIRTIGHT SEAL.
   2.2. SEALANT: MODIFIED STYRENE ACRYLIC.
3. WATER-BASED JOINT AND SEAM SEALANT:
   3.1. BRUSH-ON, WITH A MINIMUM 65 PERCENT SOLIDS CONTENT, AND WATER RESISTANT.
   3.2. VOC: MAXIMUM 75 g/L

E. HANGERS AND SUPPORTS

1. HANGER RODS: GALVANIZED-STEEL RODS AND NUTS.
2. STEEL CABLES: GALVANIZED STEEL CABLES COMPLYING WITH ASTM A603.
3. DUCT ATTACHMENTS: SHEET METAL SCREWS, BLIND RIVETS, OR SELF-TAPPING METAL SCREWS, COMPATIBLE WITH DUCT MATERIALS.
4. TRAPEZE SUPPORTS: GALVANIZED-STEEL SHAPES AND PLATES.

AIR DEVICES

A. PROVIDE AIR DEVICES AS SCHEDULED ON DRAWINGS. SELECT AIR DEVICES TO LIMIT ROOM NOISE LEVEL NO HIGHER THAN NC-30 UNLESS OTHER WISE SHOWN. PROVIDE DEVICES WITH A SOFT PLASTIC GASKET TO MAKE AN AIRTIGHT SEAL AGAINST THE MOUNTING SURFACE. COORDINATE FINAL LOCATION, FRAME, AND MOUNTING TYPE OF AIR DEVICES WITH ARCHITECTURAL REFLECTED CEILING PLANS.

B. PROVIDE SUBMITTALS INCLUDING INFORMATION ON NOISE LEVELS, PRESSURE DROP, THROW, CFM, STYLES, BORDERS, ETC., FOR EACH AIR DEVICE.

C. PROVIDE WALL EXHAUST GRILLES WITH HORIZONTAL 35 OR 45 DEGREE ANGLE VISION-PROOF BARS. PROVIDE CONCEALED FASTENERS FOR WALL MOUNTED REGISTERS AND GRILLED. PROVIDE OPPOSED BLADE DAMPERS.

D. PROVIDE CEILING MOUNTED AIR DEVICES OF LAY-IN OR SURFACE MOUNTED TYPE AS REQUIRED TO BE COMPATIBLE WITH CEILING CONSTRUCTION. PROVIDE CEILING GRILLES WITH WHITE ENAMEL FINISH UNLESS OTHERWISE NOTED.

CENTRIFUGAL FANS

A. CEILING MOUNTED

1. DIRECT DRIVEN.
2. FANS ARE LISTED UL 507 - ELECTRIC FANS.
3. FORWARD CURVED POLYPROPYLENE WHEEL, STATICALLY AND DYNAMICALLY BALANCED IN ACCORDANCE TO AMCA STANDARD 204-05.
4. ELECTRONICALLY COMMUTATED MOTOR.
   4.1. MOTOR ENCLOSURE: OPEN TYPE.
   4.2. PERMANENTLY LUBRICATED, HEAVY DUTY BALL BEARING TYPE TO MATCH WITH THE FAN LOAD AND PRE-WIRED TO THE SPECIFIC VOLTAGE.
   4.3. INTERNAL MOTOR CIRCUITRY TO CONVERT AC POWER SUPPLIED TO THE FAN TO DC POWER TO OPERATE THE MOTOR.
   4.4. MOTOR SHALL BE CONTROLLABLE DOWN TO 20% OF FULL SPEED. SPEED SHALL BE CONTROLLED BY A 0-10 VDC SIGNAL.
   4.5. MOTOR SHALL BE A MINIMUM OF 85% EFFICIENT AT ALL SPEEDS.
5. HOUSING:
   5.1. CONSTRUCTED OF HEAVY GAUGE GALVANIZED STEEL.
   5.2. INTERIOR SHALL BE LINED WITH 0.5 INCHES OF ACOUSTICAL INSULATION.
6. PROVIDE SPRING LOADED ALUMINUM BACKDRAFT DAMPER.
7. GRILLE: CONSTRUCTED OF ALUMINUM WITH A NON-YELLOWING WHITE ENAMEL FINISH.
8. PROVIDE WITH SPRING VIBRATION ISOLATION AND ALL-THREADED HANGING RODS.

B. ROOF MOUNTED

1. NOA LISTED DIRECT DRIVEN UPBLAST FAN.
2. FAN SHALL BEAR A PERMANENTLY AFFIXED MANUFACTURER'S ENGRAVED METAL NAMEPLATE CONTAINING THE MODEL NUMBER AND INDIVIDUAL SERIAL NUMBER.
3. NON-OVERLOADING, BACKWARD INCLINED CENTRIFUGAL ALUMINUM WHEEL, STATICALLY AND DYNAMICALLY BALANCED IN ACCORDANCE TO AMCA STANDARD 204-05.
4. ELECTRONICALLY COMMUTATED MOTOR.
   4.1. MOTOR ENCLOSURE: OPEN DRIP PROOF.
   4.2. PERMANENTLY LUBRICATED, HEAVY DUTY BALL BEARING TYPE TO MATCH WITH THE FAN LOAD AND PRE-WIRED TO THE SPECIFIC VOLTAGE.
   4.3. INTERNAL MOTOR CIRCUITRY TO CONVERT AC POWER SUPPLIED TO THE FAN TO DC POWER TO OPERATE THE MOTOR.
   4.4. MOTOR SHALL BE CONTROLLABLE DOWN TO 20% OF FULL SPEED. SPEED SHALL BE CONTROLLED BY A 0-10 VDC SIGNAL.
   4.5. MOTOR SHALL BE A MINIMUM OF 85% EFFICIENT AT ALL SPEEDS.
5. HOUSING:
   5.1. CONSTRUCTED OF HEAVY GAUGE ALUMINUM EXTERIOR HOUSING, CURB CAP, WINDBAND, AND MOTOR COMPARTMENT HOUSING.
   5.2. HOUSING SHALL HAVE A RIGID INTERNAL SUPPORT STRUCTURE.
   5.3. CURB CAP BASE TO BE FULLY WELDED TO WINDBAND TO ENSURE A LEAK PROOF CONSTRUCTION.
   5.4. DRIVE FRAME ASSEMBLIES SHALL BE CONSTRUCTED OF HEAVY GAUGE STEEL AND MOUNTED ON VIBRATION ISOLATORS.
6. VIBRATION ISOLATION:
   6.1. DOUBLE STUDDED OR PEDESTAL STYLE TRUE ISOLATORS.
   6.2. NO METAL TO METAL CONTACT.
   6.3. SIZED TO MATCH THE WEIGHT OF EACH FAN.
7. PROVIDE STAINLESS STEEL BIRDSCREEN.
8. PROVIDE GALVANIZED, WELDED ROOF CURB WITH FLASHING FLANGE.
9. PROVIDE GRAVITY BACKDRAFT DAMPER BALANCED FOR MINIMAL RESISTANCE TO FLOW.

MANUAL VOLUME DAMPERS

A. STANDARD, STEEL, MANUAL VOLUME DAMPERS:

1. PERFORMANCE:
   1.1. LEAKAGE RATING CLASS III: LEAKAGE NOT EXCEEDING 40 CFM/SQ. FT. AGAINST 1-INCH WG. DIFFERENTIAL STATIC PRESSURE.
2. CONSTRUCTION:
   2.1. LINKAGE OUT OF AIR STREAM.
   2.2. HAT SHAPED, 16-GAUGE-THICK, GALVANIZED SHEET STEEL, WITH MITERED AND WELDED CORNERS, FLANGELESS FRAMES FOR DUCT INSTALLATION.
   2.3. MULTIPLE OR SINGLE BLADE.
   2.4. OPPOSED BLADE DESIGN.

ACCESS PANELS AND DOORS

A. PROVIDE ACCESS DOORS FOR ALL CONCEALED EQUIPMENT AND DUCT AND PIPING ACCESSORIES THAT REQUIRE SERVICE WHERE INDICATED OR AS REQUIRED, EXCEPT WHERE ABOVE LAY-IN CEILINGS. ACCESS DOORS SHALL BE ADEQUATELY SIZED FOR THE DEVICES SERVED. ACCESS DOORS MUST BE OF THE PROPER CONSTRUCTION FOR THE TYPE OF CONSTRUCTION IN WHICH IT IS INSTALLED. OBTAIN ARCHITECT'S APPROVAL OF TYPE, SIZE, LOCATION, AND COLOR BEFORE ORDERING. PROVIDE FACTORY-ASSEMBLED UNITS, COMPLETE WITH ATTACHMENT DEVICES AND FASTENERS, READY FOR INSTALLATION, CONCEALED HINGED, FLUSH SCREWDRIVER-OPERATED CAM LOCK, AND ANCHOR STRAPS.

COMBINATION FIRE/SMOKE DAMPERS

A. PROVIDE COMBINATION FIRE/SMOKE DAMPERS WHERE SHOWN ON DRAWINGS AND AS REQUIRED BY CODE ENFORCING AUTHORITY TO MAINTAIN THE FIRE RATING NOTED ON THE ARCHITECTURAL DRAWINGS. DAMPERS SHALL MEET UL 555 CLASSIFICATION FOR FIRE RATING AND UL 555S CLASSIFICATION OF LEAKAGE CLASS II SMOKE DAMPER; DAMPER SHALL BEAR A UL LABEL ATTESTING TO THESE CLASSIFICATIONS.

B. PROVIDE FIRE DAMPER WITH A 165°F RESETTABLE TEMPERATURE DEVICE.

C. RATE FIRE/SMOKE DAMPERS FOR A MINIMUM VELOCITY OF 2,000 FPM AND A PRESSURE OF 4 INCHES W.C.

D. PROVIDE MANUFACTURER RECOMMENDED STEEL SLEEVE OF LENGTH AS REQUIRED TO MEET THE INSTALLED LOCATION.

E. PROVIDE A QUALIFIED 120V ELECTRIC ACTUATOR INSTALLED BY THE MANUFACTURER AT TIME OF DAMPER FABRICATION. ACTUATORS SHALL BE RATED FOR A MINIMUM OF 20,000 CYCLES OF OPERATION, SHALL COMPLY WITH THE LOCALLY ADOPTED BUILDING CODE AND SHALL OPEN IN 15 SECONDS OR LESS AND CLOSE IN 15 SECONDS OR LESS AFTER ALARM OR SMOKE DETECTION HAS OCCURRED.

F. PROVIDE ACCESS DOOR, SIZED PER SMACNA, WITH MINIMUM SIZE OF 10"x10", IN DUCT FOR INSPECTION AND SERVICE TO FIRE DAMPER AND FUSIBLE LINK. PROVIDE DUCT ACCESS DOOR WITHIN 12 INCHES OF DEVICE TO ALLOW FOR TESTING AND MAINTENANCE.

PACKAGED TERMINAL AIR CONDITIONERS, THROUGH-WALL UNITS

A. FACTORY ASSEMBLED AND TESTED, SELF-CONTAINED, PACKAGED, ETRMINAL AIR CONDITIONER WITH ROOM CABINET, ELECTRIC REFRIGERATION SYSTEM, AND TEMPERATURE CONTROLS. FULLY CHARGED WITH REFRIGERANT AND FILLED WITH OIL; WITH HARDWIRED CHASSIS .

B. CABINET: 0.052-INCH THICK POWDER-COATED STEEL WITH REMOVABLE FRONT PANEL WITH CONCEALED LATCHES.

1. MOUNTING: WALL WITH WALL SLEEVE.
2. LOUVERS: EXTRUDED ALUMINUM WITH ENAMEL FINISH. COORDINATE FINISHED COLOR WITH ARCHITECT.
3. HINGED ACCESS DOOR IN TOP OF CABINET FOR ACCESS TO CONTROLS.
4. WALL SLEEVES: GALVANIZED STEEL WITH POWDER-COATED PAINT.
5. REFRIGERATION SYSTEM: DIRECT-EXPANSION INDOOR COIL WITH CAPILLARY RESTRICTOR AND HERMETICALLY SEALED SCROLL COMPRESSOR WITH VIBRATION ISOLATION AND OVERLOAD PROTECTION.
   5.1. INDOOR AND OUTDOOR COILS: SEAMLESS COPPER TUBES MECHANICALLY EXPANDED INTO ALUMINUM FINS.

C. INDOOR FAN: FORWARD CURVED, CENTRIFUGAL; WITH TWO SPEED MOTOR AND POSITIVE PRESSURE VENTILATION DAMPER WITH ELECTRIC OPERATOR.

D. FILTERS: WASHABLE POLYURETHANE IN MOLDED PLASTIC FRAME.

E. CONDENSATE DRAIN: DRAIN PAN TO DIRECT CONDENSATE TO OUTDOOR COIL FOR RE-EVAPORATION.

F. OUTDOOR FAN: FORWARD CURVED, CENTRIFUGAL FAN DRIVEN BY INDOOR FAN MOTOR.

G. CONTROLS

1. CONTROL MODULE: UNIT MOUNTED DIGITAL PANEL WITH TOUCHPAD TEMPERATURE CONTROL AND WITH TOUCHPAD FOR COOLING AND FAN OPERATION.
2. OUTDOOR AIR: MOTORIZED INTAKE DAMPER. OPEN INTAKE WHEN UNIT INDOOR-AIR FAN RUNS,

CODE COMPLIANCE: THIS PROJECT HAS BEEN DESIGNED IN ACCORDANCE WITH THE PUERTO RICO EXISTING BUILDING CODE 2018 EDITION. CONTRACTORS ARE NOT ALLOWED TO MAKE CHANGES TO THIS PROJECT WITHOUT WRITTEN AUTHORIZATION OF THE ARCHITECT OF RECORD.

FJM Engineering, psc
Consulting Engineers
352 San Claudio St., STE 1, PMB 367, San Juan, PR 00926-4144
Tel: (787) 722-4641 / Cel: (787) 632-1494
E-mail: FMate@fjm-eng.com

FRANCISCO J. MATE INGENIERO LICENCIADO LIC. #13947 PUERTO RICO

Yo, Francisco J. Mate Cabrera, Lic. #13947, certifico que soy el profesional que diseñó estos planos y las especificaciones complementarias. Los mismos cumplen con las disposiciones y especificaciones cumplen con las disposiciones aplicables del Reglamento Conjunto para la Evaluación y Expedición de Permisos relacionados a Construcción, Vigentes de las Agencias, Corporaciones Públicas y Municipios con jurisdicción. Certifico, además, que en la preparación de estos planos y especificaciones no he incurrido en conducta prohibida por la Ley Núm. 84 de 26 de junio de 2018, según enmendada, conocida como la "Ley Anticorrupción y Pro Ética Gubernamental de Puerto Rico" y con la [Ley Núm. 3](19 de 15 de mayo de 1936, según enmendada; Ley Núm. 66 de 6 de julio de 1978, según enmendada; y Ley Núm. 84 de 26 de junio de 2018, según enmendada. Reconozco que cualquier declaración falsa o falsificación de los hechos que se haya producido en el diseño de estos planos podría acarrear la nulidad de mi, mis agentes o empleados, o por otras personas con mi conocimiento, me hacen responsable de cualquier acción disciplinaria por la OGPe.

CERTIFIED:

arquiteg
ARQUITECTOS
INGENIEROS
PLANIFICADORES

CONSTRUCTION AND FACILITIES MANAGEMENT OFFICE

PUERTO RICO ARMY NATIONAL GUARD
#552 BORINQUEER TRAIL, FORT BUCHANAN, PUERTO RICO 00934

PROJECT:
RESTORATION REPAIR OF BUILDING 149, FATC I P/N: 432122
FORT ALLEN TRAINING CENTER, JUANA DIAZ, PUERTO RICO

NO.	DESCRIPTION	DATE

REVISIONS

NO.	DESCRIPTION	DATE

100% BIDDING SET
NOT FOR CONSTRUCTION
BY: V.M.V. DATE: NOV 04, 2024

DESIGN:
VÍCTOR M. VILLEGAS, ANDRÉS M. VILLEGAS, GILBERTO A. MENDOZA, CARLA G. VILLARRUBIA, ELIAS VALDES, MARIELA SUÁREZ, JUAN CAMILO OSORIO

SUPERVISOR:
VICTOR SANCHEZ, P.E.

SHEET NUMBER:
M-01

SHEET TITLE:
MECHANICAL SPECIFICATIONS

SHEET: | TOTAL SHEETS: OF

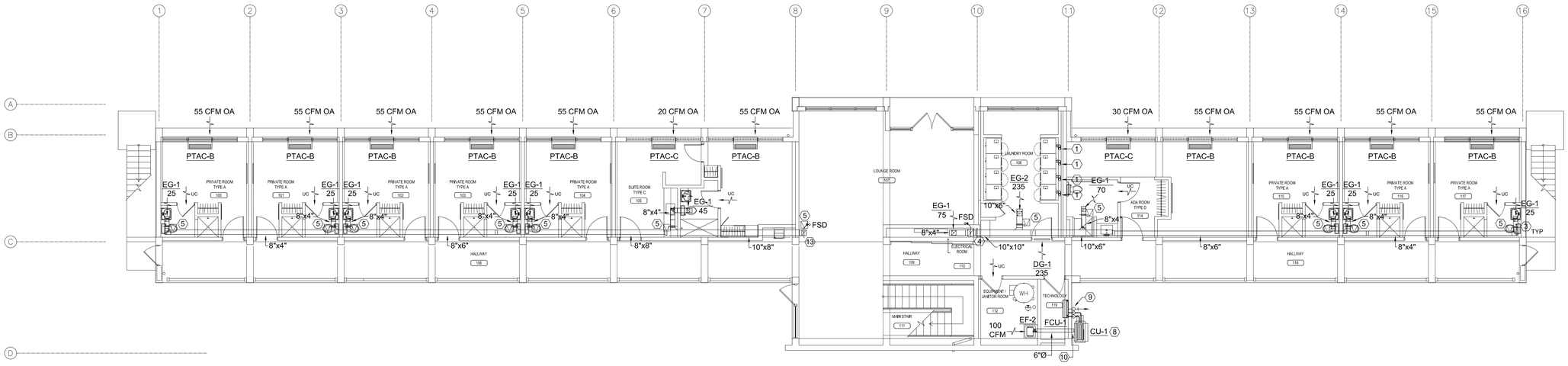

1 MECHANICAL HVAC PLAN - FIRST FLOOR

SCALE: 1/8" = 1'-0"

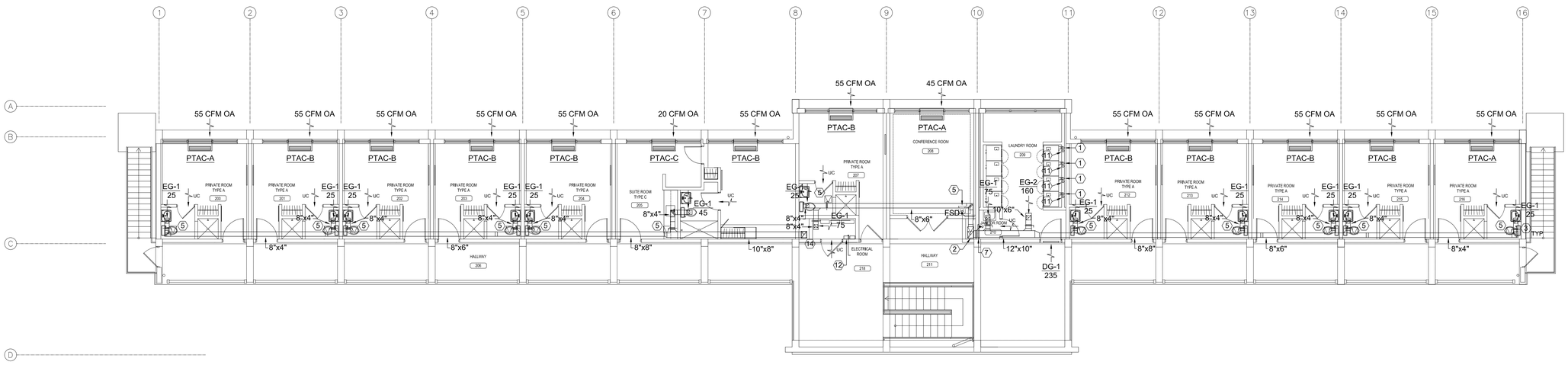

2 MECHANICAL HVAC PLAN - SECOND FLOOR

SCALE: 1/8" = 1'-0"

GENERAL NOTES

1. DRAWINGS ARE DIAGRAMMATIC AND INDICATE THE GENERAL EXTENT OF THE WORK. THE CONTRACTOR SHALL BE RESPONSIBLE FOR THE COORDINATION AND PROPER INSTALLATION OF ALL MECHANICAL SYSTEMS. THE CONTRACTOR SHALL PROVIDE ALL NECESSARY OFFSETS AND FITTINGS WHICH MAY BE REQUIRED DUE TO SPACE CONSTRAINTS OR OTHER CONDITIONS.
2. THE CONTRACTOR SHALL PROVIDE MISCELLANEOUS SUPPORTING STEEL, ETC., FOR THE PROPER INSTALLATION OF ALL MECHANICAL SYSTEMS.
3. THE CONTRACTOR SHALL VERIFY ALL CLEARANCES PRIOR TO THE FABRICATION OF ANY WORK.
4. THE CONTRACTOR SHALL COORDINATE THE LOCATION OF CEILING GRILLES, REGISTERS, AND DIFFUSERS WITH THE ARCHITECTURAL REFLECTED CEILING PLAN.
5. DUCTWORK, PIPING, OR ANY OTHER MECHANICAL SYSTEM COMPONENT SHALL NOT BE LOCATED OVER THE TOP OF ANY ELECTRICAL PANELS OR EQUIPMENT.
6. THE CONTRACTOR SHALL COORDINATE AND PROVIDE ACCESS PANELS IN HARD CEILINGS FOR ALL EQUIPMENT WHICH REQUIRE ACCESS, SUCH AS FIRE AND SMOKE DAMPERS, SMOKE DETECTORS, BALANCING DAMPERS, ETC. CONTRACTOR TO COORDINATE MAKE AND MODEL WITH ARCHITECT. COORDINATE ACCESS PANEL WITH THE RATING OF THE ASSEMBLY IN WHICH THEY WILL BE INSTALLED IN TO MAINTAIN THE OVERALL RATING OF THE ASSEMBLY.
7. ALL MECHANICAL EQUIPMENT, DAMPERS, DETECTORS, ETC., WHICH REQUIRE ROUTINE MAINTENANCE OR INSPECTION SHALL BE INSTALLED WITHIN 2 FT OF THE FINISHED CEILING HEIGHT.

SHEET KEYNOTES

1. PROVIDE 4"Ø RIGID METAL DRYER EXHAUST VENT AND CLAMPS. DRYER MUST BE EXHAUSTED OUTDOORS. ANY REQUIRED OFFSETS SHALL BE DONE USING 45° ELBOWS. INSTALL A 180° SWEEP ELBOW ON END OF VENT AT LEAST 2 FEET ABOVE SURFACE OF ROOF.
2. 20"x10" EXHAUST RISER UP TO EF-1 ON ROOF AND 16"x12" DOWN TO FIRST FLOOR. PROVIDE COMBINATION FIRE/SMOKE DAMPER AT SHAFT WALL PENETRATION.
3. PROVIDE ALUMINUM OPPOSED BLADE MANUAL BALANCING DAMPER AT EVERY TAKE-OFF AS SHOWN ON PLANS. GRILLE DAMPER SHALL NOT BE THE ONLY METHOD FOR BALANCING AIRFLOW.
4. 12"x10" EXHAUST RISER UP TO SECOND FLOOR. PROVIDE COMBINATION FIRE/SMOKE DAMPER AT SLAB PENETRATION. PROVIDE SMOKE DETECTOR DOWNSTREAM OF COMBINATION FIRE/SMOKE DAMPER.
5. PROVIDE 12"X12" CEILING ACCESS DOOR AT DAMPER LOCATION FOR ACCESS AND MAINTENANCE.
6. 8"X4" VERTICAL DUCT DROP WITH SIDEWALL EXHAUST GRILLE. PROVIDE MANUAL BALANCING DAMPER ON DROP.
7. PROVIDE 24"X24" FIRE RATED ACCESS DOOR TO ACCESS FLOOR SLAB COMBINATION FIRE/SMOKE DETECTOR ACTUATOR AND ASSOCIATED DUCT SMOKE DETECTOR.
8. INSTALL CONDENSING UNIT ON 4" CONCRETE PAD AT GRADE LEVEL. INSULATE REFRIGERANT PIPING AS PER PR ENERGY CONSERVATION CODE TABLE C403.11.3. PROTECT INSULATION FROM WEATHER AS PER SECTION C403.11.3.1.
9. PROVIDE INSULATED 1"Ø CONDENSATE DRAIN PIPE. PIPE TO DISCHARGE AT SPLASH BLOCK ON GRADE.
10. PROVIDE 6"Ø WALL CAP WITH BACKDRAFT DAMPER.
11. DRYER EXHAUST VENT UP FROM FIRST FLOOR, RUN THROUGH ROOF. INSTALL A 180° SWEEP ELBOW ON END OF VENT AT LEAST 2 FEET ABOVE SURFACE OF ROOF.
12. EF-1 AND EF-2 MOTOR STARTERS.
13. 10"x8" EXHAUST RISER UP TO SECOND FLOOR. PROVIDE COMBINATION FIRE/SMOKE DAMPER AT SLAB PENETRATION. PROVIDE SMOKE DETECTOR DOWNSTREAM OF COMBINATION FIRE/SMOKE DAMPER.
14. 12"x10" EXHAUST RISER UP TO EF-2 ON ROOF AND 10"x8" DOWN TO FIRST FLOOR. PROVIDE COMBINATION FIRE/SMOKE DAMPER AT SHAFT WALL PENETRATION.

CODE COMPLIANCE: THIS PROJECT HAS BEEN DESIGNED IN ACCORDANCE WITH THE PUERTO RICO EXISTING BUILDING CODE 2018 EDITION. CONTRACTORS ARE NOT ALLOWED TO MAKE CHANGES TO THIS PROJECT WITHOUT WRITTEN AUTHORIZATION OF THE ARCHITECT OF RECORD.

FJM Engineering, psc
Consulting Engineers
352 San Claudio St., STE 1, PMB 367, San Juan, PR 00926-4144
Tel: (787) 722-4641 / Cel: (787) 632-1494
E-mail: FMateo@fjm-eng.com

FRANCISCO J. MATE INGENIERO LICENCIADO LIC. #13947 PUERTO RICO

Yo, Francisco J. Mate Cabrera, Lic. #13947, certifico que soy el profesional que diseñó estos planos y las especificaciones complementarias. Que los mismos fueron preparados conforme y las especificaciones cumplen con las disposiciones aplicables del Reglamento Conjunto para la Evaluación y Expedición de Permisos y los Códigos de Construcción Vigentes de las Corporaciones Públicas con jurisdicción Científico. Corporaciones Públicas con jurisdicción Científico, además, que en la preparación de estos planos y especificaciones se cumplió con la Ley Núm. 173 de 12 de agosto de 2004, según enmendada, conocida como la "Ley para Fomentar la Participación de Profesionales con la Ley Núm. 1 de 8 de enero de 2004, según enmendada, conocida como la "Ley para Fomentar la Participación de Profesionales y lo dispuesto en la Ley Núm. 1 de 8 de enero de 2004, según enmendada, conocida como la "Ley para Fomentar la Participación de Profesionales con la Ley Núm. 319 de 15 de mayo de 1938, según enmendada, Ley Núm. 96 de 6 de julio de 1988, según enmendada, conocida como la "Ley de Tasificación de los hechos que se haya producido por errores, omisiones o negligencia de mi parte, mis agentes o empleados, o por otras personas con mi conocimiento, me hacen responsable de acuerdo a la reglamentación disciplinaria por la OGPe.

CERTIFIED:

arquiteg
ARQUITECTOS
INGENIEROS
PLANIFICADORES

CONSTRUCTION AND FACILITIES MANAGEMENT OFFICE

PUERTO RICO ARMY NATIONAL GUARD
#552 BORINQUENEER TRAIL, FORT BUCHANAN, PUERTO RICO 00934

PROJECT:
RESTORATION REPAIR OF BUILDING 149, FATC I P/N: 432122
FORT ALLEN TRAINING CENTER, JUANA DIAZ, PUERTO RICO

NO.	DESCRIPTION	DATE

REVISIONS

NO.	DESCRIPTION	DATE

100% BIDDING SET
NOT FOR CONSTRUCTION
BY: V.M.V. DATE: NOV 04, 2024

DESIGN:
VICTOR M. VILLEGAS
ANDRÉS M. VILLEGAS
GILBERTO A. MENDOZA
CARLA G. VILLARRUBIA
ELIAS VALDES
MARIELA SUÁREZ
JUAN CAMILO OSORIO

SUPERVISOR: VICTOR SANCHEZ, P.E.

SHEET NUMBER: M-02

SHEET TITLE: MECHANICAL HVAC PLAN - FIRST & SECOND FLOOR

SHEET: TOTAL SHEETS: OF

GENERAL NOTES

1. DRAWINGS ARE DIAGRAMMATIC AND INDICATE THE GENERAL EXTENT OF THE WORK. THE CONTRACTOR SHALL BE RESPONSIBLE FOR THE COORDINATION AND PROPER INSTALLATION OF ALL MECHANICAL SYSTEMS. THE CONTRACTOR SHALL PROVIDE ALL NECESSARY OFFSETS AND FITTINGS WHICH MAY BE REQUIRED DUE TO SPACE CONSTRAINTS OR OTHER CONDITIONS.
2. THE CONTRACTOR SHALL PROVIDE MISCELLANEOUS SUPPORTING STEEL, ETC., FOR THE PROPER INSTALLATION OF ALL MECHANICAL SYSTEMS.
3. THE CONTRACTOR SHALL VERIFY ALL CLEARANCES PRIOR TO THE FABRICATION OF ANY WORK.
4. THE CONTRACTOR SHALL COORDINATE THE LOCATION OF CEILING GRILLES, REGISTERS, AND DIFFUSERS WITH THE ARCHITECTURAL REFLECTED CEILING PLAN.
5. DUCTWORK, PIPING, OR ANY OTHER MECHANICAL SYSTEM COMPONENT SHALL NOT BE LOCATED OVER THE TOP OF ANY ELECTRICAL PANELS OR EQUIPMENT.
6. THE CONTRACTOR SHALL COORDINATE AND PROVIDE ACCESS PANELS IN HARD CEILINGS FOR ALL EQUIPMENT WHICH REQUIRE ACCESS, SUCH AS FIRE AND SMOKE DAMPERS, SMOKE DETECTORS, BALANCING DAMPERS, ETC. CONTRACTOR TO COORDINATE MAKE AND MODEL WITH ARCHITECT. COORDINATE ACCESS PANEL WITH THE RATING OF THE ASSEMBLY IN WHICH THEY WILL BE INSTALLED IN TO MAINTAIN THE OVERALL RATING OF THE ASSEMBLY.
7. ALL MECHANICAL EQUIPMENT, DAMPERS, DETECTORS, ETC., WHICH REQUIRE ROUTINE MAINTENANCE OR INSPECTION SHALL BE INSTALLED WITHIN 2 FT OF THE FINISHED CEILING HEIGHT.

(#) SHEET KEYNOTES

1. DRYER EXHAUST VENT. INSTALL A 180° SWEEP ELBOW ON END OF VENT AT LEAST 2 FEET ABOVE SURFACE OF ROOF. PROVIDE BACKDRAFT DAMPER.

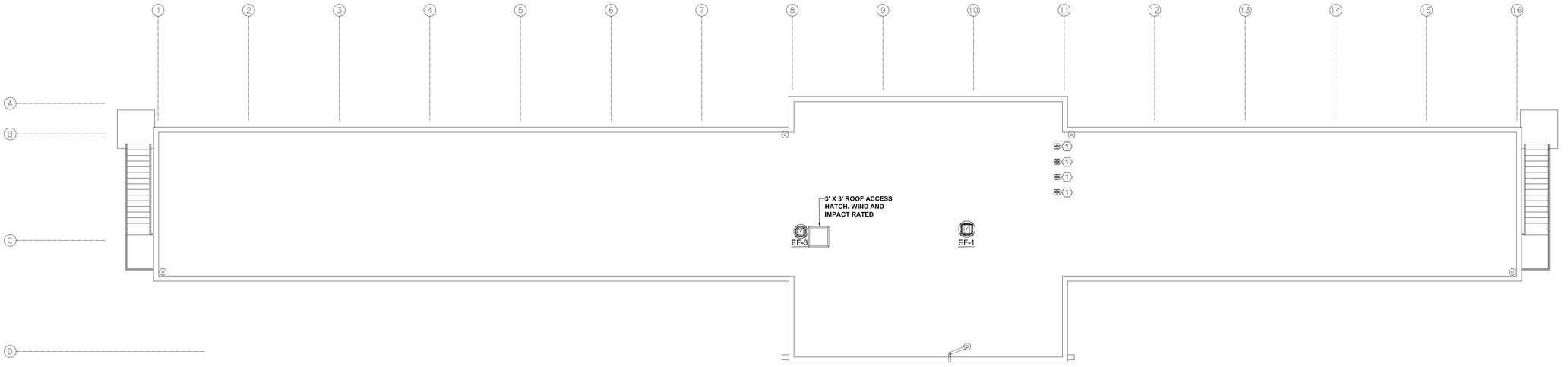

1 MECHANICAL HVAC PLAN - ROOF
SCALE: 1/8" = 1'-0"

CODE COMPLIANCE: THIS PROJECT HAS BEEN DESIGNED IN ACCORDANCE WITH THE PUERTO RICO EXISTING BUILDING CODE 2018 EDITION. CONTRACTORS ARE NOT ALLOWED TO MAKE CHANGES TO THIS PROJECT WITHOUT WRITTEN AUTHORIZATION OF THE ARCHITECT OF RECORD.

FJM Engineering, psc
Consulting Engineers
352 San Claudio St., STE 1, PMB 367, San Juan, PR 00926-4144
Tel: (787) 722-4641 / Cel: (787) 632-1494
E-mail: FMate@fjm-eng.com

FRANCISCO J. MATE INGENIERO LICENCIADO Lic. #13947 PUERTO RICO

Yo, *Francisco J. Mate Cabrera, Lic. #13947*, certifico que soy al profesional que diseñó estos planos y las especificaciones complementarias. Además, certifico que estos planos y especificaciones cumplen con las disposiciones aplicables del Reglamento Conjunto y las disposiciones del Reglamento para Obras de Construcción y Uso de Terrenos, Vigentes de las Corporaciones Públicas con jurisdicción Científico, además, que en la preparación de estos planos y especificaciones se ha cumplido a cabalidad con lo dispuesto en la Ley Núm. 1 el de 8 de enero de 2004, según enmendada, conocida como la "Ley para la Transformación y Flexibilidad Energética" y con la (Ley Núm. 319 de 15 de mayo de 1938, según enmendada, Ley Núm. 96 de 6 de julio de 1978, para exonerar de responsabilidad civil por falsificación de los hechos que se haya producido por deficiencias ocultas en los planos y obras). Reconozco que cualquier declaración falsa o falsificación de los hechos que se haya producido por deficiencias ocultas en los planos y obras por mí, mis agentes o empleados, o por otras personas con mi conocimiento, me hacen responsable ante mi cliente y ante la(s) junta(s) y disciplinaria por la OGPe.

CERTIFIED:

arquiteg
ARQUITECTOS
INGENIEROS
PLANIFICADORES

CONSTRUCTION AND FACILITIES MANAGEMENT OFFICE

PUERTO RICO ARMY NATIONAL GUARD
#552 BORINQUEN TRAIL, FORT BUCHANAN, PUERTO RICO 00934

PROJECT:
RESTORATION REPAIR OF BUILDING 149, FATC I P/N: 432122
FORT ALLEN TRAINING CENTER, JUANA DIAZ, PUERTO RICO

NO.	DESCRIPTION	DATE

REVISIONS

NO.	DESCRIPTION	DATE

100% BIDDING SET
NOT FOR CONSTRUCTION
BY: V.M.V. DATE: NOV 04, 2024

DESIGN:
VICTOR M. VILLEGAS, ANDRÉS M. VILLEGAS, GILBERTO A. MENDOZA, CARLA G. VILLARRUBIA, ELIAS VALDES, MARIELA SUÁREZ, JUAN CAMILO OSORIO

SUPERVISOR: VICTOR SANCHEZ, P.E.

SHEET NUMBER:
M-03

SHEET TITLE:
MECHANICAL HVAC PLAN - ROOF

SHEET: TOTAL SHEETS: OF

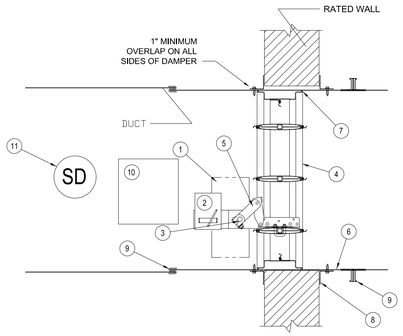

ITEM	DESCRIPTION
1.	ACTUATOR (LOCATION MAY VARY).
2.	OPTIONAL FIRESTAT
3.	AUXILIARY OPERATING JACK SHAFT
4.	DAMPER
5.	OVER CENTER LOCK
6.	SLEEVE
7.	CAULKING MATERIAL (MAY BE ON EITHER SIDE OF DAMPER FRAME
8.	PFMA OR CONVENTIONAL MOUNTING ANGLES
9.	S-JOINT/DUCT MATE, SLEEVE TO DUCT
10.	ACCESS DOOR
11.	DUCT MOUNTED SMOKE DETECTOR

3 COMBINATION FIRE/SMOKE DAMPER INSTALLATION DETAIL

SCALE: N.T.S.

ATTACHMENT OF EXTERIOR MECHANICAL EQUIPMENT SHALL COMPLY WITH THE FOLLOWING REQUIREMENTS:

- 2018 PRMC CHAPTER 3
- 2018 PRMC 301,15
- 2018 PRMC 304,1, 304.2, 304.10

2018 PRBC, CHAPTER 16 STRUCTURAL DESIGN, 1609.3
ULTIMATE DESIGN WIND SPEED: 170 MPH

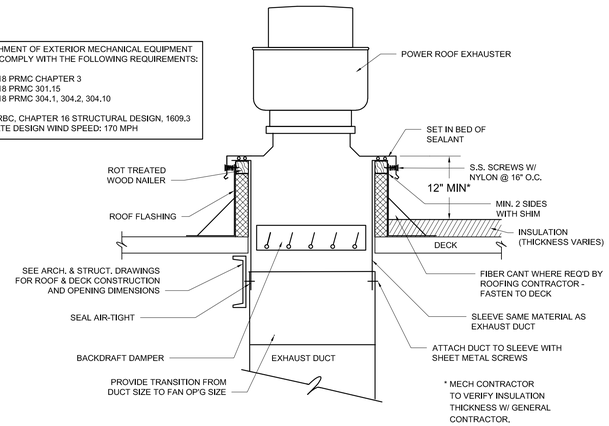

2 ROOF MOUNTED EXHAUST FAN INSTALLATION

SCALE: N.T.S.

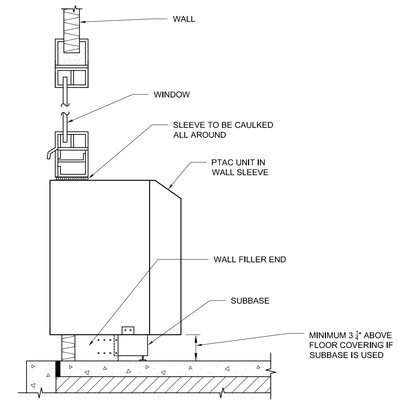

1 PTAC UNIT WALL INSTALLATION

SCALE: N.T.S.

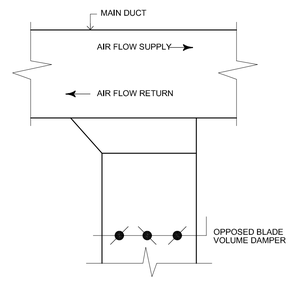

6 TYPICAL TAKE-OFF DETAIL

SCALE: N.T.S.

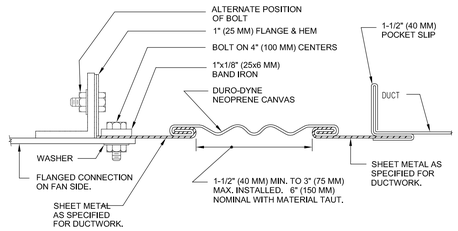

5 FLEXIBLE CONNECTION DETAIL

SCALE: N.T.S.

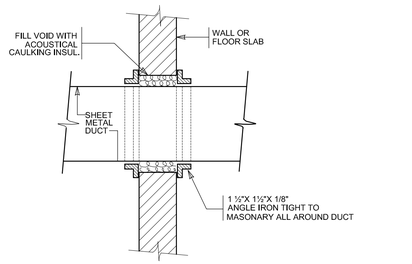

4 DUCT NON-FIRE RATED WALL PENETRATION DETAIL

SCALE: N.T.S.

RECTANGULAR DUCTS HANGER SIZES

DUCT WIDTH	ANGLE SIZE	ROD SIZE	BOLT SIZE
UP TRU 48	1-1/2x1-1/2x1/8	1/4	3/8
49 TRU 72	1-1/2x1-1/2x1/4 OR 2x2x1/4	1/4	3/8
73 TRU 108	2-1/2x2-1/2x1/8	3/8	3/8

A/C DUCT HANGER DETAIL

NOT TO SCALE

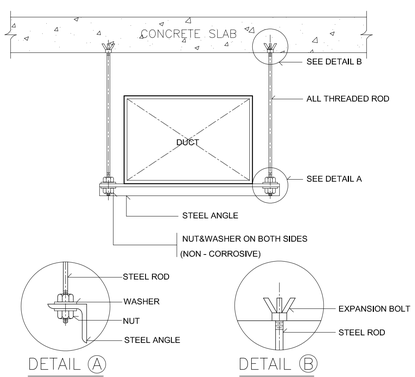

NOTE:

ALL STEEL SUPPORTS SHALL BE PAINTED WITH 2 COATS OF ANTI-RUST PAINT AND 1 COAT OF FINISHED COAT OR AS SPECIFIED.

7 DUCT HANGER DETAIL

SCALE: N.T.S.

FJM Engineering, psc
Consulting Engineers
352 San Claudio St., STE 1, PMB 367, San Juan, PR 00926-4444
Tel: (787) 722-4641 / Cel: (787) 632-1494
E-mail: FMate@fjm-eng.com

CODE COMPLIANCE: THIS PROJECT HAS BEEN DESIGNED IN ACCORDANCE WITH THE PUERTO RICO EXISTING BUILDING CODE 2018 EDITION. CONTRACTORS ARE NOT ALLOWED TO MAKE CHANGES TO THIS PROJECT WITHOUT WRITTEN AUTHORIZATION OF THE ARCHITECT OF RECORD.

Yo, Francisco J. Mate Cabrera Lic. #13947, certifico que soy el profesional que diseñó estos planos y las especificaciones complementarias. Hemos diseñado los mismos y las especificaciones cumplen con las disposiciones aplicables del Reglamento Conjunto y los Códigos de Construcción Vigentes de las Corporaciones Públicas con jurisdicción Científico, además, que en la preparación de estos planos y especificaciones no se violó ningún derecho de autor según lo dispuesto en la Ley Núm. 1 de 8 de enero de 2004, según enmendada, conocida como la "Ley para la Inversión de la Producción Fílmica" y/o con la (Ley Núm. 310 de 15 de mayo de 1938, según enmendada, Ley Núm. 96 de 6 de julio de 1988, según enmendada, conocida como la "Ley de Propiedad Intelectual de Puerto Rico". Reconozco que cualquier declaración falsa o falsificación de los hechos que se haya producido en el diseño de estos planos y especificaciones por mí, mis agentes o empleados, o por otras personas con mi conocimiento, me hacen responsable de acciones disciplinaria por la OGPe.

CERTIFIED:

arquiteg
ARQUITECTOS
INGENIEROS
PLANIFICADORES

CONSTRUCTION AND FACILITIES MANAGEMENT OFFICE

PUERTO RICO ARMY NATIONAL GUARD
#552 BORINQUENEER TRAIL, FORT BUCHANAN, PUERTO RICO 00934

PROJECT:
RESTORATION REPAIR OF BUILDING 149, FATC I P/N: 432122
FORT ALLEN TRAINING CENTER, JUANA DIAZ, PUERTO RICO

NO.	DESCRIPTION	DATE

NO.	DESCRIPTION	DATE

100% BIDDING SET
NOT FOR CONSTRUCTION
BY: V.M.V. DATE: NOV 04, 2024

DESIGN:
VÍCTOR M. VILLEGAS
ANDRÉS M. VILLEGAS
GILBERTO A. MENDOZA
CARLA G. VILLARRUBIA
ELIAS VALDES
MARIELA SUÁREZ
JUAN CAMILO OSORIO

SUPERVISOR: VICTOR SANCHEZ, P.E.

SHEET NUMBER: M-04

SHEET TITLE: MECHANICAL DETAILS

SHEET: TOTAL SHEETS: OF

FRANCISCO J. MATE INGENIERO LICENCIADO LIC. #13947 PUERTO RICO

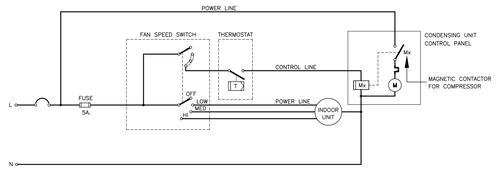

2 WIRING DIAGRAM FOR CONTROL AIR-COOLED SPLIT TYPE AC UNIT

MISC FANS SCALE: N.T.S

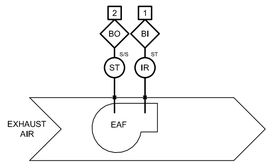

1 TOILET AND GENERAL EXHAUST CONTROL DIAGRAM

MISC FANS SCALE: N.T.S

TOILET AND GENERAL EXHAUST

THE EXHAUST SYSTEM SHALL OPERATE IN AUTO MODE THROUGH THE MOTOR STARTER INTERFACE,. ON SIGNAL FROM THE STARTER, THE EXHAUST FAN SHALL START AND RUN CONTINUOUSLY.

CURRENT RELAY SHALL PROVE FOR FAN OPERATION. FAILURE OF SWITCH SHALL GENERATE AN ALARM TO THE MOTOR STARTER.

EF CONTROL POINTS						
TAG	DESCRIPTION	AI	AO	BI	BO	UNITS
1	MOTOR STATUS (CURRENT RELAY)			X		ON/OFF
2	FAN STARTER				X	ON/OFF

CODE COMPLIANCE: THIS PROJECT HAS BEEN DESIGNED IN ACCORDANCE WITH THE PUERTO RICO EXISTING BUILDING CODE 2018 EDITION. CONTRACTORS ARE NOT ALLOWED TO MAKE CHANGES TO THIS PROJECT WITHOUT WRITTEN AUTHORIZATION OF THE ARCHITECT OF RECORD.

FJM Engineering, psc
Consulting Engineers
352 San Claudio St., STE 1, PMB 367, San Juan, PR 00926-4144
Tel: (787) 722-4641 / Cel: (787)-632-1494
E-mail: FMate@fjm-eng.com

FRANCISCO J. MATE INGENIERO LICENCIADO Lic. #13947 PUERTO RICO

Yo, *Francisco J. Mate Cabrera Lic. #13947*, certifico que soy al profesional que diseñó estos planos y las especificaciones complementarias. Hemos preparado los mismos y las especificaciones cumplen con las disposiciones aplicables del Reglamento Conjunto y las disposiciones del Reglamento de Planificación y Códigos de Construcción Vigentes de las Corporaciones Públicas con jurisdicción Científico. Corporaciones Públicas con jurisdicción Científico, además, que en la preparación de estos planos y especificaciones no se violan derechos de autor o lo dispuesto en la Ley Núm. 1 de 6 de enero de 2004, según enmendada, conocida como la "Ley de Propiedad Intelectual de Puerto Rico de 2004" y con la (Ley Núm. 319 de 15 de mayo de 1938, según enmendada, Ley Núm. 96 de 6 de julio de 1988, según enmendada, conocida como la "Ley de Reconozco que cualquier declaración falsa o falsificación de los hechos que se haya producido por el profesional o cualquiera de sus socios o mí, mis agentes o empleados, o por otras personas con mi conocimiento, me hacen responsable de cualquier acción disciplinaria de disciplinaria por la OGPe.

CERTIFIED:

arquiteg
ARQUITECTOS
INGENIEROS
PLANIFICADORES

CONSTRUCTION AND FACILITIES MANAGEMENT OFFICE

PUERTO RICO ARMY NATIONAL GUARD
#552 BORINQUEN TRAIL, FORT BUCHANAN, PUERTO RICO 00934

PROJECT:
RESTORATION REPAIR OF BUILDING 149, FATC I P/N: 432122
FORT ALLEN TRAINING CENTER, JUANA DIAZ, PUERTO RICO

REVISIONS			
NO.	DESCRIPTION	DATE	
		DATE	

100% BIDDING SET
NOT FOR CONSTRUCTION
BY: V.M.V. DATE: NOV 04, 2024

DESIGN:
VÍCTOR M. VILLEGAS
ANDRÉS M. VILLEGAS
GILBERTO A. MENDOZA
CARLA G. VILLARRUBIA
ELIAS VALDES
MARIELA SUÁREZ
JUAN CAMILO OSORIO

SUPERVISOR: VICTOR SANCHEZ, P.E.

SHEET NUMBER: M-05

SHEET TITLE: CONTROL DIAGRAMS

SHEET: TOTAL SHEETS: OF

PRMC TABLE 403.3.1.1 OUTSIDE AIR CALCULATION SUMMARY

SPACE/UNIT	OCCUPANT CATEGORY	PPL #/1000	Pz	Rp	Vbzp	Ra	Az	Vbza	Vbz	Ez	Voz	Vot
			PPL QTY	OA RATE PER PERSON	OA CFM BASED ON PPL	OA BASED ON AREA	AREA	VENT. BASED ON AREA	TOTAL VENT. RATE	ZONE AIR DISTRIB. EFF	ZONE OA = Vbz/Ez	PROVIDED CFM
PRIVATE ROOM TYPE A	DORMITORY SLEEPING AREAS	20	3	5	15	0.06	140	9	24	1	24	55
SUITE ROOM TYPE C	DORMITORY SLEEPING AREAS	20	6	5	30	0.06	299	18	48	1	48	75
ADA ROOM TYPE D	DORMITORY SLEEPING AREAS	20	6	5	30	0.06	294	18	48	1	48	75
CONFERENCE ROOM - 2ND FL	CONFERENCE ROOMS	50	10	5	50	0.06	195	12	62	1	62	65
LAUNDRY ROOM	COMMERCIAL LAUNDRY	30	7	25	175	-	216	-	175	1	175	205

NOTE: NUMBER OF OCCUPANTS LISTED IS FOR INFORMATIONAL PURPOSES ONLY.

PACKAGED TERMINAL AIR CONDITIONER SCHEDULE

MARK	ROOM SERVED	REFRIGERANT	FAN			CAPACITY	ELECTRICAL DATA		EER	NOTES
			CFM (HIGH)	CFM (LOW)	OA CFM	BTU/H	V/PH/HZ	MCA		
PTAC-A	AS SHOWN	R32	330	245	AS SHOWN	11,400	208/1/60	7.4	11.9	1 - 7
PTAC-B	AS SHOWN	R32	330	264	AS SHOWN	9,200	208/1/60	4.9	12.2	1 - 7
PTAC-C	AS SHOWN	R32	330	245	AS SHOWN	7,000	208/1/60	3.7	13.4	1 - 7
PTAC-D	AS SHOWN	R32	400	314	AS SHOWN	14,500	208/1/60	8.5	10.3	1 - 7

NOTES:

1. PROVIDE WALL SLEEVE WITH INTERNAL DRAIN FOR WINDOW WALL INSTALLATION.
2. PROVIDE ALUMINUM ARCHITECTURAL OUTDOOR GRILLE. COORDINATE COLOR WITH ARCHITECT.
3. PROVIDE CONDENSATE DISPERSION SYSTEM.
4. PROVIDE 230/208V SUB-BASE KIT.
5. PROVIDE LEVELING LEGS.
6. PROVIDE 230/208V POWER DOOR KIT.
7. PROVIDE 10-PACK SPARE FILTERS.

AIR DEVICE SCHEDULE

MARK	TYPE	FRAME TYPE	DAMPER TYPE	NOMINAL SIZE (IN)	MANUFACTURER AND MODEL	NOTES
EG-1	LOUVERED FACE	SURFACE MOUNT	OPPOSED BLADE	6x6	PRICE 600	1, 2
EG-2	LOUVERED FACE	SURFACE MOUNT	OPPOSED BLADE	8x8	PRICE 600	1, 2
DG-1	DOOR GRILLE	SURFACE MOUNT	-	20x12	PRICE STG	1, 2

NOTES:

1. ALUMINUM CONSTRUCTION.
2. COORDINATE FINISHES WITH ARCHITECT.

SPLIT-SYSTEM INDOOR AIR-HANDLING UNIT SCHEDULE

GENERAL				FAN DATA		COOLING DATA						ELECTRICAL DATA			NOTES
MARK	ROOM SERVED	MATCHED WITH OUTDOOR UNIT	TYPE	CFM	ESP IN. W.G.	REFRIGERANT TYPE	NOMINAL TONS	EAT		LAT		TOTAL CAPACITY MBH	SENSIBLE CAPACITY	MCA AMPS	MOCP AMPS	V/PH/HZ	
								DB °F	WB °F	DB °F	WB °F						
FCU-1	TECHNOLOGY 119	CU-1	WALL-MOUNT	364	-	R410A	0.75	75.0	62.1	54.0	53.8	9.0	7.4	1.0	15	208/1/60	1, 2, 3

NOTES:

1. PROVIDE SECONDARY DRAIN PAN WITH WATER ALARM TO SHUT DOWN UNIT.
2. FACTORY-INSTALLED DISCONNECT
3. VRF PIPE SIZING TO BE VERIFIED AND APPROVED BY MANUFACTURER.

SPLIT-SYSTEM OUTDOOR CONDENSING UNIT SCHEDULE

GENERAL		COOLING DATA				ELECTRICAL DATA						NOTES
MARK	MATCHED WITH FCU	NOMINAL TONS	MINIMUM EER	REFRIGERANT TYPE	CONDENSING TEMPERATURE °F	MCA AMPS	MOCP AMPS	V/PH/HZ	CONDENSER FAN QTY	COMPRESSOR		
										QTY	TYPE	
CU-1	FCU-1	0.75	12	R410A	95.0	12	15	208/1/60	1	1	SCROLL	1, 2

NOTES:

1. INSTALL PER MANUFACTURER'S WRITTEN INSTRUCTIONS.
2. PROVIDE CABLE RESTRAINTS TO PROTECT FROM HIGH WIND LOADS.

FAN SCHEDULE

MARK	TYPE	MOUNTING	CFM	ESP (IN WG)	MOTOR DATA			FAN RPM	ELECTRICAL DATA			EMERGENCY POWER	FAN INTERLOCK	WEIGHT (LBS)	NOTES
					DRIVE	HP	WATTS		VFD	V/PH	FLA				
EF-1	UPBLAST	ROOF	915	1.25	DIRECT	1	-	1,677	N	115/1	11.5	N	N	81	1, 2, 3, 7-12, 14, 15
EF-2	CENTRIFUGAL	CEILING	100	0.5	DIRECT	1	128	1,050	N	115/1	1.8	N	N	81	1, 4, 5, 6, 13
EF-3	UPBLAST	ROOF	340	1.25	DIRECT	1	-	1,677	N	115/1	11.5	N	N	81	1, 2, 3, 7-12, 14, 15

NOTES:

1. MOTOR RATED FOR CONTINUOUS USE.
2. MOTOR - VARI-GREEN EC MOTOR.
3. PROVIDE MOTOR STARTER WITH ON/OFF/AUTO MODES, OVERLOAD PROTECTION, AND FAULT INDICATOR LIGHT.
4. UL 507 LISTED - ELECTRIC FAN.
5. PROVIDE VIBRATION ISOLATION KIT.
6. PROVIDE ALUMINUM GRILLE WITH WHITE ENAMEL FINISH.
7. PROVIDE BIRDSCREEN AND GRAVITY BACKDRAFT DAMPER.
8. CONTROL - DIAL FOR BALANCING.
9. PROVIDE FLORIDA APPROVED NOA CURB DESIGNED TO WITHSTAND HURRICANE WIND FORCES.
10. PROVIDE FACTORY MOUNTED DISCONNECT SWITCH.
11. MIAMI-DADE NOA #22-0606.03
12. SEISMIC RATED PER IBC 2018 & ASCE 7-16 STANDARDS.
13. PROVIDE ROUND WALL CAP WITH BACKDRAFT DAMPER.
14. UL 705 LISTED - POWER VENTILATOR.
15. MOTOR WITH CSA APPROVAL AND THERMAL OVERLOAD.

CODE COMPLIANCE: THIS PROJECT HAS BEEN DESIGNED IN ACCORDANCE WITH THE PUERTO RICO EXISTING BUILDING CODE 2018 EDITION. CONTRACTORS ARE NOT ALLOWED TO MAKE CHANGES TO THIS PROJECT WITHOUT WRITTEN AUTHORIZATION OF THE ARCHITECT OF RECORD.

FJM Engineering, psc
Consulting Engineers
352 San Claudio St., STE 1, PMB 367, San Juan, PR 00926-4144
Tel: (787) 722-4641 / Cel: (787) 632-1494
E-mail: FMatc@fjm-eng.com

Yo, Francisco J. Mate Cabrera, Lic. #13847, certifico que soy el profesional que diseñó estos planos y las especificaciones complementarios. Estos planos y especificaciones cumplen con las disposiciones y especificaciones cumplen con las disposiciones aplicables del Reglamento Conjunto y las aplicables del Reglamento Conjunto y las Enmiendas, Códigos y Estándares vigentes y los Códigos de Construcción Vigentes de las Corporaciones Públicas con jurisdicción Certifico, además, que en la preparación de estos planos y especificaciones no he incurrido en conducta según lo dispuesto en la Ley Núm. 1 de 8 de enero de 2004, según enmendada, conocida como la "Ley de Ética Gubernamental de Puerto Rico de 2011" y con la (Ley Núm. 319 de 15 de mayo de 1938, según enmendada, Ley Núm. 86 de 6 de julio de 1994, según enmendada). Reconozco que cualquier declaración falsa o falsificación de los hechos que se haya producido por el conocimiento de mi parte, o por el de otras personas con mi conocimiento, me hacen responsable de acciones disciplinarias de la OGPe, disciplinaria por la OGPe.

CERTIFIED:

arquiteg
ARQUITECTOS
INGENIEROS
PLANIFICADORES

CONSTRUCTION AND FACILITIES MANAGEMENT OFFICE

PUERTO RICO ARMY NATIONAL GUARD
#552 BORINQUENEER TRAIL, FORT BUCHANAN, PUERTO RICO 00934

PROJECT:
RESTORATION REPAIR OF BUILDING 149, FATC I P/N: 432122
FORT ALLEN TRAINING CENTER, JUANA DIAZ, PUERTO RICO

REVISIONS

NO.	DESCRIPTION	DATE

100% BIDDING SET
NOT FOR CONSTRUCTION
BY: V.M.V. DATE: NOV 04, 2024

DESIGN:
VÍCTOR M. VILLEGAS, ANDRÉS M. VILLEGAS, GILBERTO A. MENDOZA, CARLA G. VILLARRUBIA, ELIAS VALDES, MARIELA SUÁREZ, JUAN CAMILO OSORIO

SUPERVISOR:
VICTOR SANCHEZ, P.E.

SHEET NUMBER:
M-06

SHEET TITLE:
MECHANICAL SCHEDULES

SHEET: | TOTAL SHEETS: OF

* CERTAIN ITEMS IN THE LEGEND BELOW MAY NOT APPLY TO THIS PROJECT.

PIPING & VALVE LEGEND

	GATE VALVE
	GLOBE VALVE
	BALL VALVE
	BUTTERFLY VALVE
	PLUG VALVE
	CHECK VALVE
	WYE STRAINER
	THREE-WAY VALVE
	MODULATING CONTROL VALVE
	TWO POSITION CONTROL VALVE
	THREE-WAY MODULATING CONTROL VALVE
	THREE-WAY TWO POSITION CONTROL VALVE
M	MOTOR OPERATED VALVE
S	SOLENOID VALVE
	PRESSURE REGULATING VALVE
	PRESSURE REDUCING VALVE
	PRESSURE RELIEF VALVE
	BACK FLOW PREVENTOR
	FLEXIBLE CONNECTION
	WATER BALANCE VALVE/CIRCUIT SETTER
	UNION
	FLANGED CONNECTION FOR EQUIPMENT REMOVAL
	BLIND FLANGE
	CAP OR PLUG
	QUICK CONNECTOR
	ELBOW - TURNED DOWN
	ELBOW - TURNED UP
	TEE - DOWN
	TEE - UP
	TOP CONNECTION
	BOTTOM CONNECTION
	REDUCER
	FLOOR DRAIN WITH TRAP
	FLOOR SINK WITH TRAP
	SHOWER HEAD
	THERMOMETER WITH THERMOWELL
	PRESSURE GAUGE VALVE SHUTOFF
	DRAIN - 3/4 INCH BALL VALVE WITH HOSE END CONNECTION WITH BRASS CAP
	VENT - 1/2 INCH BALL VALVE WITH HOSE END CONNECTION WITH BRASS CAP
OR	VENT THRU ROOF
	PIPE BREAK
M	WATER OR NATURAL GAS METER
	CONNECT TO EXISTING
	LIMIT OF DEMOLITION

* CERTAIN ABBREVIATIONS LISTED BELOW MAY NOT APPLY TO THIS PROJECT.

PLUMBING ABBREVIATIONS

AAV	AIR ADMITTANCE VALVE	L	LAVATORY
AD	AREA DRAIN	LF	LAVATORY FAUCET
AFF	ABOVE FINISHED FLOOR	MB	MOP BASIN
AFG	ABOVE FINISHED GRADE	NO	NORMALLY OPEN
AG	AIR GAP	NC	NORMALLY CLOSED
BFF	BELOW FINISHED FLOOR	NPS	NOMINAL PIPE SIZE
BFG	BELOW FINISHED GRADE	PC	PLUMBING CONTRACTOR
BFP	BACKFLOW PREVENTER	PRV	PRESSURE REDUCING VALVE
BOP	BOTTOM OF PIPE	PS	PREFAB SHOWER STALL
CA	COMPRESSED AIR	PSIG	POUNDS PER SQUARE INCH
CO	CLEANOUT	PVC	POLYVINYL CHLORIDE
CW	COLD WATER (DOMESTIC)	RD	ROOF DRAIN
DCDA	DOUBLE CHECK DETECTOR ASSEMBLY	RPBFP	REDUCED PRESSURE BACKFLOW PREVENTER
DD	DECK DRAIN	RPDA	REDUCED PRESSURE DETECTOR ASSEMBLY
DN	DOWN		
DS	DOWNSPOUT	RP	HOT WATER RECIRCULATION PUMP
DWH	DOMESTIC WATER HEATER	RRW	RECYCLED RAINWATER
DWG(S)	DRAWING(S)	SAN	SANITARY
DWV	DRAIN, WASTE, AND VENT	SH	SHOWER FAUCET
ED	EMERGENCY ROOF DRAIN	SI	SEDIMENT INTERCEPTOR
EDS	EMERGENCY DOWNSPOUT	SR	SHOWER RECEPTOR
EEW	EMERGENCY EYEWASH	SS	SERVICE SINK
EWC	ELECTRIC WATER COOLER	SV	STACK VENT
FCO	FLOOR CLEANOUT	TD	TRENCH DRAIN
FCW	FILTERED COLD WATER	TMV	THERMOSTATIC MIXING VALVE
FD	FLOOR DRAIN	TP	TRAP PRIMER
FF	FINISHED FLOOR	TW	TEMPERED WATER
FFD	FUNNEL FLOOR DRAIN	TYP	TYPICAL
FG	FINISHED GRADE	UG	UNDERGROUND
FHW	FILTERED HOT WATER	UR	URINAL
FS	FLOOR SINK	V	VENT
G	NATURAL GAS	VS	VENT STACK
GC	GENERAL CONTRACTOR	VTR	VENT THROUGH ROOF
GW	GREASE WASTE	W	WASTE
HB	HOSE BIB	WC	WATER CLOSET
HD	HUB DRAIN	WCO	WALL CLEANOUT
HW	HOT WATER (DOMESTIC)	WH	WALL HYDRANT (FREEZEPROOF)
HWR	HOT WATER RECIRC.	WS	WASTE STACK
IE	INVERT ELEVATION		
IW	INDIRECT WASTE		
IWH	INSTANTANEOUS WATER HEATER (ELECTRIC)		

PLUMBING PIPING LEGEND

SYMBOL	DESCRIPTION
	SANITARY UNDERGROUND
	SANITARY ABOVEGROUND
	SANITARY VENT
ST	STORM ABOVEGROUND
ST	STORM UNDERGROUND
ES	EMERGENCY STORM
	DOMESTIC COLD WATER
	DOMESTIC HOT WATER (°F AS NOTED)
	DOMESTIC HOT WATER RECIRC
RRW	RECYCLED RAINWATER
G G	NATURAL GAS
	PERFORATED PVC FOUNDATION DRAIN
	EXISTING TO BE REMOVED

PLUMBING SHEET INDEX

SHEET NUMBER	SHEET NAME
P-00	PLUMBING SYMBOLS, LEGEND & NOTES
P-01	PLUMBING SPECIFICATIONS
P-02	SANITARY PIPING PLANS - FIRST FLOOR
P-03	GRAVITY PIPING PLAN - SECOND FLOOR
P-04	PRESSURE PIPING PLANS
P-05	GRAVITY PIPING ENLARGED VIEWS
P-06	PRESSURE PIPING ENLARGED VIEWS
P-07	GRAVITY PIPING ISOMETRIC
P-08	PRESSURE PIPING ISOMETRIC
P-09	PLUMBING DETAILS
P-10	PLUMBING SCHEDULES

PLUMBING NOTES

1. PROVIDE ALL MATERIALS AND EQUIPMENT AND PERFORM ALL LABOR REQUIRED TO INSTALL COMPLETE AND OPERABLE PLUMBING SYSTEMS AS INDICATED ON THE DRAWINGS, AS SPECIFIED, AND AS REQUIRED BY STATE AND LOCAL CODES.
2. ANY EXISTING CONDITIONS SHOWN ON DRAWINGS REFLECT INFORMATION FURNISHED BY THE OWNER AND ARE ACCURATE TO THE BEST KNOWLEDGE OF THE ENGINEER. FIELD CONDITIONS MAY VARY FROM THOSE SHOWN ON DRAWINGS. THE CONTRACTOR IS TO MAKE ARCHITECT/OWNER'S REPRESENTATIVE AWARE OF ANY DISCREPANCIES BETWEEN DRAWINGS AND ACTUAL FIELD CONDITIONS PRIOR TO COMMENCING WORK.
3. PRIOR TO COMMENCING WORK, PLUMBING CONTRACTOR SHALL FIELD VERIFY EXACT LOCATION OF SERVICES, INVERT ELEVATIONS OF UNDERFLOOR SANITARY LINES, AND SIZES OF PIPING TO BE RE-USED.
4. CONTRACT DOCUMENT DRAWINGS FOR PLUMBING WORK ARE DIAGRAMMATIC AND ARE INTENDED TO CONVEY SCOPE AND GENERAL ARRANGEMENT ONLY.
5. INSTALL ALL PLUMBING FIXTURES, EQUIPMENT, AND APPURTENANCES IN ACCORDANCE WITH MANUFACTURERS' RECOMMENDATIONS, CONTRACT DOCUMENTS, AND APPLICABLE CODES AND REGULATIONS.
6. THE LOCATIONS OF ALL ITEMS SHOWN ON THE DRAWINGS OR CALLED FOR IN THE SPECIFICATIONS THAT ARE NOT DEFINITELY FIXED BY DIMENSIONS ARE APPROXIMATE ONLY. THE EXACT LOCATIONS NECESSARY TO SECURE THE BEST CONDITIONS AND RESULTS MUST BE DETERMINED BY THE PROJECT SITE CONDITIONS AND SHALL HAVE THE APPROVAL OF THE ENGINEER BEFORE BEING INSTALLED. DO NOT SCALE DRAWINGS.
7. COORDINATE CONSTRUCTION OF ALL PLUMBING WORK WITH ARCHITECTURAL, STRUCTURAL, CIVIL, ELECTRICAL, ETC., SHOWN ON OTHER CONTRACT DOCUMENT DRAWINGS.
8. ALL PLUMBING WORK SHALL BE COORDINATED WITH ALL TRADES INVOLVED. OFFSETS IN PIPING AROUND OBSTRUCTIONS SHALL BE PROVIDED AT NO ADDITIONAL COST TO OWNER.
9. VERIFY EXACT LOCATIONS OF ALL FLOOR AND ROOF DRAINS WITH ARCHITECTURAL AND STRUCTURAL DRAWINGS FOR PROPER PLACEMENT WITH RESPECT TO SLOPES. COORDINATE THE INSTALLATION WITH THE APPROPRIATE CONTRACTOR.
10. UNLESS OTHERWISE INDICATED, PLUMBING WORK STOPS AT A POINT 5'-0" OUTSIDE THE BUILDING. COORDINATE EXACT LOCATION INCLUDING INVERT ELEVATION WITH SITE UTILITY CONTRACTOR.
11. MAINTAIN A MINIMUM OF 6'-8" CLEARANCE TO UNDERSIDE OF PIPES AND SUSPENDED EQUIPMENT THROUGHOUT ACCESS ROUTES IN MECHANICAL ROOMS.
12. ALL TESTS SHALL BE COMPLETED BEFORE ANY PLUMBING EQUIPMENT OR PIPING INSULATION IS APPLIED.
13. WHERE TWO OR MORE ITEMS OF THE SAME TYPE OF EQUIPMENT ARE REQUIRED, THE PRODUCT OF ONE MANUFACTURER SHALL BE USED.
14. CONCRETE HOUSEKEEPING PADS TO SUIT PLUMBING EQUIPMENT SHALL BE SIZED AND LOCATED BY THE PLUMBING CONTRACTOR. MINIMUM CONCRETE PAD THICKNESS SHALL BE 4 INCHES. PAD SHALL EXTEND BEYOND THE EQUIPMENT A MINIMUM OF 4 INCHES ON EACH SIDE. CONCRETE HOUSEKEEPING PADS SHALL BE PROVIDED BY THE GENERAL CONTRACTOR. IT SHALL BE THE RESPONSIBILITY OF THE PLUMBING CONTRACTOR TO COORDINATE SIZE AND LOCATION OF CONCRETE HOUSEKEEPING PADS WITH GENERAL CONTRACTOR & WITH APPROVAL OF THE OWNER'S REPRESENTATIVE.
15. ALL MISCELLANEOUS STEEL REQUIRED TO ENSURE PROPER INSTALLATION SHALL BE FURNISHED AND INSTALLED BY THE PLUMBING CONTRACTOR.
16. PROVIDE ACCESS PANELS FOR INSTALLATION IN WALLS AND CEILINGS, WHERE REQUIRED, TO SERVICE VALVES AND OTHER CONCEALED PLUMBING EQUIPMENT. ACCESS PANELS SHALL BE TURNED OVER TO GENERAL CONTRACTOR FOR INSTALLATION.
17. ALL EQUIPMENT, PIPING, ETC. SHALL BE SUPPORTED AS REQUIRED TO PROVIDE A VIBRATION FREE INSTALLATION.
18. PROVIDE FLEXIBLE CONNECTIONS IN ALL PIPING SYSTEMS CONNECTED TO PUMPS AND OTHER EQUIPMENT WHICH REQUIRE VIBRATION ISOLATION. FLEXIBLE CONNECTIONS SHALL BE PROVIDED AS CLOSE TO THE EQUIPMENT AS POSSIBLE OR AS INDICATED ON THE DRAWINGS.
19. ALL PIPING AND EQUIPMENT SUPPORTED FROM STRUCTURAL STEEL SHALL BE COORDINATED WITH GENERAL CONTRACTOR. ALL ATTACHMENTS TO STEEL BAR JOISTS, TRUSSES, OR JOIST GIRDERS SHALL BE AT PANEL POINTS. PLUMBING EQUIPMENT AND PIPING SHALL NOT BE SUPPORTED FROM METAL DECK.
20. CONTRACTOR TO INFORM THE STRUCTURAL ENGINEER IN WRITING OF ANY SINGLE SUSPENDED LOAD IN EXCESS OF 400 LBS.
21. RUN ALL SANITARY AND STORM PIPING WITH 1% MINIMUM GRADE UNLESS OTHERWISE NOTED. HORIZONTAL VENT PIPING SHALL BE GRADED TO DRIP BACK TO SOIL OR WASTE PIPE BY GRAVITY. 2" PIPING SHALL BE RUN AT 2% MINIMUM SLOPE.
22. ELEVATIONS AS SHOWN ON THE DRAWINGS ARE TO THE CENTERLINE OF ALL PRESSURE PIPING AND TO THE INVERT OF ALL GRAVITY PIPING.
23. ADJUST SEWER INVERTS TO KEEP TOPS OF PIPE IN LINE WHERE PIPE SIZE CHANGES.
24. MAINTAIN A MINIMUM OF 4'-6" OF GROUND COVER OVER ALL UNDERGROUND WATER MAINS AND A MINIMUM OF 3'-0" OF GROUND COVER OVER ALL UNDERGROUND SEWERS AND DRAINS OUTSIDE OF BUILDING.
25. PROVIDE SHUTOFF VALVES IN ALL DOMESTIC HOT AND COLD WATER PIPING SYSTEM BRANCHES.
26. INSTALL PIPING SO THAT ALL VALVES, STRAINERS, UNIONS, TRAPS, FLANGES, AND OTHER APPURTENANCES REQUIRING ACCESS ARE ACCESSIBLE.
27. WHERE DOMESTIC COLD AND HOT WATER PIPING DROPS INTO A CHASE, THE SIZE SHOWN FOR THE PIPE DROPS SHALL BE USED TO THE LAST FIXTURE.
28. INSTALL ALL PIPING WITHOUT FORCING OR SPRINGING AND CLEAR OF DOORS AND WINDOWS.
29. ALL ABOVE GROUND PIPING SHALL GRADE TO LOW POINTS. PROVIDE HOSE END DRAIN VALVES AT THE BOTTOM OF ALL RISERS AND LOW POINTS.
30. ALL VALVES (EXCEPT CONTROL VALVES) AND STRAINERS SHALL BE FULL SIZE (FULL PORT) OF PIPE BEFORE REDUCING SIZE TO MAKE CONNECTIONS TO EQUIPMENT AND CONTROLS AND SHALL BE ADJUSTED FOR SMOOTH AND EASY OPERATION.
31. PROVIDE ALL PLUMBING FIXTURES AND EQUIPMENT WITH ACCESSIBLE STOPS.
32. PROVIDE CLEANOUTS IN SANITARY AND STORM DRAINAGE SYSTEMS AT ENDS OF RUNS, AT CHANGES IN DIRECTION, NEAR THE BASE OF STACKS, EVERY 100 FEET IN HORIZONTAL RUNS AND ELSEWHERE AS INDICATED. ALL CLEANOUTS SHALL BE FULL SIZE OF PIPE FOR PIPE SIZES 4 INCHES AND SMALLER AND SHALL BE 4 INCHES FOR PIPE SIZES LARGER THAN 4 INCHES.
33. ALL BALANCING VALVES SHALL BE PROVIDED WITH POSITION INDICATORS AND MAXIMUM ADJUSTABLE STOPS (MEMORY STOPS).
34. ALL FLOOR DRAINS AND FLOOR SINKS SHALL BE TRAP SEALED. MIFAB MI-GARD OR EQUAL.
35. WATER AND DRAIN PIPING SHALL NOT BE RUN THROUGH OR ABOVE ELECTRICAL SWITCH GEAR OR ROOMS, ELEVATOR SHAFTS, ELEVATOR MACHINE ROOMS, OR TELEPHONE ROOMS.
36. THE PLUMBING CONTRACTOR SHALL BE RESPONSIBLE FOR ALL COMPONENTS, ADAPTERS, AND FITTINGS TO MAKE FINAL CONNECTIONS TO ALL PLUMBING FIXTURES AS WELL AS FIXTURES PROVIDED BY OTHER CONTRACTORS.
37. THE DRAWINGS AND SPECIFICATIONS ARE COMPLEMENTARY; WHATEVER IS CALLED FOR IN ONE SHALL BE REQUIRED AS IF CALLED FOR IN BOTH. WHERE CONFLICTS BETWEEN THE SPECIFICATIONS AND DRAWINGS MAY OCCUR, THE MOST COSTLY OF THE TWO OPTIONS SHALL TAKE PRECEDENCE.

APPLICABLE PLUMBING CODES

1. THIS LIST IS NOT INCLUSIVE OF ALL CODES AND STANDARDS THAT MAY OR MAY NOT APPLY TO THIS PROJECT.

2. PERFORM WORK SPECIFIED IN SPECIFICATIONS IN ACCORDANCE WITH STANDARDS LISTED BELOW INCLUDING AMENDMENTS OR REVISIONS. WHEN THESE SPECIFICATIONS ARE MORE STRINGENT, THEY TAKE PRECEDENCE. IN CASE OF CONFLICT, OBTAIN A DECISION FROM THE DESIGNER.

NATIONAL GUARD PAMPHLET (NG PAM) 415-5, ARMY NATIONAL GUARD MILITARY CONSTRUCTION PROGRAM EXECUTION, 31 JULY 2003 OR CURRENT EDITION

NGR 415-10, CHAPTER 5, ARMY NATIONAL GUARD FACILITIES CONSTRUCTION, 25 JULY 2003 OR CURRENT EDITION

NG PAM 415-12, ARMY NATIONAL GUARD FACILITIES ALLOWANCES, 01 JUNE 2011

DG 415-5, ARMY NATIONAL GUARD GENERAL FACILITIES INFORMATION DESIGN, 01 JUNE 2011

UNITED FACILITIES CRITERIA (UFC) 4-720-01 LODGING FACILITIES

UFC 1-200-01 DOD BUILDING CODE

INTERNATIONAL BUILDING CODE, CURRENT EDITION

PUERTO RICO BUILDING CODE, 2018 OR ADOPTED EDITION

PUERTO RICO PLUMBING CODE, 2018

FJM Engineering, psc
Consulting Engineers
352 San Claudio St., STE 1, PMB 367, San Juan, PR 00926-4144
Tel: (787) 722-4641 / Cell: (787) 632-1494
E-mail: FMate@fjm-eng.com

FRANCISCO J. MATE INGENIERO LICENCIADO Lic. #13947 PUERTO RICO

Yo, Francisco J. Mate Cabrera, Lic. #13947, certifico que soy el profesional que diseñó estos planos y las especificaciones complementarias. Certifico además que estos planos y especificaciones cumplen con las disposiciones aplicables del Reglamento Conjunto y los Códigos de Construcción Vigentes de las Corporaciones Públicas con jurisdicción. Certifico, además, que en la preparación de estos planos y especificaciones no incurrí en conducta constitutiva de lo dispuesto en la Ley Núm. 1 de 3 de enero de 2004, según enmendada, conocida como la "Ley de Ética Gubernamental de Puerto Rico de 2011" y con la (Ley Núm. 319 de 15 de mayo de 1938, según enmendada, Ley Núm. 96 de 6 de julio de 1988, según enmendada, y Ley Núm. 230 de 23 de julio de 1974, según enmendada). Reconozco que cualquier declaración falsa o falsificación de los hechos que se haya producido en el diseño de estos planos y especificaciones por mí, mis agentes o empleados, o por otras personas con mi conocimiento, me hacen responsable de la acción disciplinaria y/o judicial y disciplinaria por la OGPe.

CERTIFIED:

arquiteg
ARQUITECTOS
INGENIEROS
PLANIFICADORES

CONSTRUCTION AND FACILITIES MANAGEMENT OFFICE

PUERTO RICO ARMY NATIONAL GUARD
#552 BORINQUEN TRAIL, FORT BUCHANAN, PUERTO RICO 00934

PROJECT:
RESTORATION REPAIR OF BUILDING 149, FATC I P/N: 432122
FORT ALLEN TRAINING CENTER, JUANA DIAZ, PUERTO RICO

NO.	DESCRIPTION	DATE

REVISIONS

NO.	DESCRIPTION	DATE

100% BIDDING SET
NOT FOR CONSTRUCTION
BY: V.M.V. DATE: NOV 04, 2024

DESIGN:
VICTOR M. VILLEGAS
ANDRÉS M. VILLEGAS
GILBERTO A. MENDOZA
CARLA G. VILLARRUBIA
ELIAS VALDES
MARIELA SUÁREZ
JUAN CAMILO OSORIO

SUPERVISOR:
VICTOR SANCHEZ, P.E.

SHEET NUMBER:
P-00

SHEET TITLE:
PLUMBING SYMBOLS, LEGEND, AND NOTES

SHEET: | TOTAL SHEETS: OF

CODE COMPLIANCE: THIS PROJECT HAS BEEN DESIGNED IN ACCORDANCE WITH THE PUERTO RICO EXISTING BUILDING CODE 2018 EDITION. CONTRACTORS ARE NOT ALLOWED TO MAKE CHANGES TO THIS PROJECT WITHOUT WRITTEN AUTHORIZATION OF THE ARCHITECT OF RECORD.

PLUMBING SPECIFICATIONS

A. SUBMITTALS

1. PRODUCT DATA - ALL EQUIPMENT, FIXTURES, PIPING, PIPING ACCESSORIES AND PIPING INSULATION.
2. TEST REPORTS - PRESSURE TESTS, FLUSHING AND DISINFECTION, TEST OF BACKFLOW PREVENTION ASSEMBLIES.
3. OPERATION AND MAINTENANCE DATA - INSTALLATION, OPERATION AND MAINTENANCE MANUALS OF ALL SPECIFIED EQUIPMENT, FIXTURES, PIPING, PIPING ACCESSORIES AND PIPING INSULATION. FURNISH 2 BOOKS AND 2 CD'S OF BOOK.

B. PIPE AND FITTINGS

1. ALL PIPES, FITTINGS, ACCESSORIES UTILIZED TO CONVEY POTABLE WATER SHALL COMPLY WITH NSF-61.
2. DOMESTIC WATER
   a. INSIDE BUILDING 6 INCH AND SMALLER - TYPE "L" HARD DRAWN SEAMLESS COPPER TUBE (ASTM B88)
   b. UNDERGROUND SERVICE 2 INCH AND SMALLER" - TYPE "K" SOFT COPPER TUBE WITHOUT JOINTS (ASTM B88)
3. BUILDING SEWERS AND DRAINS "UNDERGROUND" (STORM AND SANITARY SEWERS TO 5'-0" OUTSIDE BUILDING WALLS) - SOLID WALL PVC PIPE, ASTM D2665 DRAIN, WASTE, AND VENT, PVC SOCKET FITTINGS, AND SOLVENT-CEMENTED JOINTS.
4. SOIL, WASTE, VENT AND DRAIN PIPING "ABOVE GROUND INTERIOR" - SOLID WALL PVC PIPE, ASTM D2665 DRAIN, WASTE, AND VENT, PVC SOCKET FITTINGS, AND SOLVENT-CEMENTED JOINTS.
5. NO PVC PIPING SHALL BE INSTALLED IN A CEILING PLENUM SPACE.
6. DOMESTIC WATER "UNDERFLOOR" 2 INCHES AND SMALLER - TYPE "K" SOFT COPPER WITHOUT JOINTS (ASTM B88).
7. TRAP PRIMER FEED PIPING - TYPE "K" SOFT COPPER WITHOUT JOINTS (ASTM B88) FOR ELEVATED FLOORS WITH DRAINS AND CROSS-LINKED POLYETHYLENE (PEX) PLASTIC TUBING (ASTM F 877) FOR SLAB ON GRADE WITH DRAINS.
8. WATER SERVICE "UNDERGROUND EXTERIOR" 3 INCHES AND LARGER - AS REQUIRED BY THE SERVING UTILITY BUT NOT LESS THAN ANSI A21.51/AWWA C151 CEMENT MORTAR LINED (ANSI A21.4/AWWA C104) DUCTILE IRON PIPE. FURNISH WITH RUBBER GASKETED PUSH ON JOINTS (ANSI A21.1/AWWA C111).
9. FITTINGS FOR COPPER PIPE - WROUGHT COPPER SOLDER JOINT TYPE ASTM B16.22. WHERE SILVER BRAZING ALLOY IS USED TO JOIN PIPE AND FITTINGS, FITTINGS TO BE SUITABLE FOR BRAZING.
10. FITTINGS FOR WATER SERVICE PIPING "UNDERGROUND EXTERIOR"- PUSH ON JOINTS WITH RUBBER GASKET MEETING ANSI A21.11/AWWA C111.
11. GROOVED PIPING SYSTEMS: AT THE CONTRACTORS OPTION, THE FOLLOWING GROOVED PIPING SYSTEMS MAY BE USED FOR PIPE SIZES 2-1/2" AND LARGER, FOR DOMESTIC WATER IN LIEU OF THE PIPE MATERIALS SPECIFIED ABOVE.
    c. PIPING: 2-1/2 INCHES THROUGH 6 INCHES - TYPE L HARD DRAWN COPPER TUBING ASTM B88 ROLL GROOVED.
    d. GASKETS: GRADE E, EPDM, FLUSHSEAL (FOR COPPER TUBING), GREEN COLOR STRIPE, TEMPERATURE RANGE MINUS 30 DEGREES F TO 230 DEGREES F. GRADE E GASKETS UL CLASSIFIED IN ACCORDANCE WITH ASNI/NSF-61 FOR POTABLE WATER SERVICE.
    e. PIPE COUPLINGS: COPPER TUBING: RIGID TYPE, CONSISTING OF TWO PIECES OF DUCTILE IRON, CAST WITH OFFSETTING, ANGLE-PATTERN BOLT PADS TO COPPER-TUBE DIMENSIONS. COUPLING GASKETS WILL BE A SYNTHETIC RUBBER EPDM GASKET WITH A FLUSHSEAL PRESSURE RESPONSIVE DESIGN. VICTAULIC QUICK 607.
    f. FITTINGS: COPPER TUBING: FULL FLOW WROUGHT COPPER OR CAST BRONZE GROOVED END FITTINGS, ASTM B75 TUBE OR B152 AND ASME B16.22. FITTINGS SHALL BE MANUFACTURED TO COPPER TUBING SIZES.
    g. BUTTERFLY VALVES (SHUTOFF SERVICE) COPPER TUBING: 2-1/2 INCHES THROUGH 6 INCHES. CAST BRONZE BODY WITH COPPER-TUBING SIZED GROOVED ENDS. TRIPLE SEAL TYPE. DESIGNED FOR BUBBLE TIGHT, SHUT OFF SERVICE UP TO 300 PSI, MAXIMUM TEMPERATURE RATING 230 DEG F. FURNISH WITH LEVER LOCK HANDLE. VICTAULIC SERIES 608.
    h. MANUFACTURER: VICTAULIC COMPANY OF AMERICA, EQUIVALENT BY ANVIL INTERNATIONAL, INC. - GRUVLOCK, GRINNEL MECHANICAL PRODUCTS.
18. COPPER PRESS SYSTEM: AT THE CONTRACTOR'S OPTION, THE FOLLOWING PRESS SYSTEM MAY BE USED FOR DOMESTIC HOT AND COLD WATER SYSTEMS (SIZES 1/2" TO 4") IN LIEU OF THE PIPE MATERIALS / JOINTS SPECIFIED ABOVE.
    a. PRESS FITTINGS: COPPER PRESS FITTINGS SHALL CONFORM TO THE MATERIAL AND SIZING REQUIREMENTS OF ASME B16.18 OR ASME B16.22. O-RINGS FOR COPPER PRESS FITTINGS SHALL BE EPDM.
    b. MANUFACTURER: VIEGA PRO-PRESS OR ENGINEER APPROVED EQUAL.
19. VALVES
    a. PROVIDE ALL VALVES OF THE SAME MANUFACTURER WHERE POSSIBLE. MANUFACTURERS: APOLLO, MILWAUKEE, NIBCO, HAMMOND, OR WATTS. ALL VALVES TO BE OF DOMESTIC MANUFACTURE.
    b. VALVES IN WATER PIPING 2 INCHES AND SMALLER: TWO-PIECE BALL VALVES WITH CAST BRONZE BODY, TEFLON SEATS, CONVENTIONAL PORT, BLOW-OUT PROOF STEM, ADJUSTABLE PACKING GLAND, CHROME PLATED SOLID BRONZE BALL, SOLDERED OR THREADED ENDS, MINIMUM 150 WSP, 600 WOG. MILWAUKEE BA-150.
    c. VALVES IN WATER PIPING 2-1/2 INCHES AND LARGER: BUTTERFLY TYPE, CLASS B CAST IRON BODY, STAINLESS STEEL STEM, ALUMINUM BRONZE DISC, AND EPDM LINER; 175 WOG. LUG TYPE WITH LUG DRILLED AND TAPPED, EXTENDED NECK.
    d. OPERATORS: ON-OFF THROTTLING LEVER HANDLES ON SIZES 2-1/2 INCHES TO 6 INCHES. EQUIP VALVES USED FOR BALANCING WITH MEMORY STOP. MILWAUKEE CL123 SERIES.
    e. HORIZONTAL CHECK VALVES 2 INCHES AND SMALLER: SWING TYPE DESIGN, CLASS 125, 200 WOG, WITH BRONZE BODY AND CAP WITH THREADED OR SOLDERED ENDS. CONFORM TO ASTM B62. MILWAUKEE 509 OR 1509.
    f. HORIZONTAL CHECK VALVES 2-1/2 INCHES AND LARGER: SWING TYPE DESIGN, CLASS 125, 200 WOG, CAST IRON BODY, FLANGED ENDS, BRONZE TRIM AND BOLTED CAP CONFORMING TO ASTM A126, CLASS B. MILWAUKEE F2974.
    g. VERTICAL CHECK VALVES 2 INCHES AND SMALLER: 250 WOG. CENTER GUIDED, SILENT, NON-SLAM TYPE. BRONZE BODY, SPRING, AND DISC HOLDER, THREADED ENDS. METRAFLEX 700.
    h. VERTICAL CHECK VALVES 2-1/2 INCHES AND LARGER: 125 POUND FLANGED ENDS, WAFER STYLE, SILENT TYPE, CAST IRON BODY, BRONZE TRIM, STAINLESS STEEL SPRING. METRAFLEX 900.
    i. VALVES FOR USE IN GROOVED PIPING SYSTEMS: REFER TO GROOVED PIPING SYSTEM SPECIFICATION.
    j. AUTOMATIC FLOW REGULATING VALVE INSTALLED IN DOMESTIC HOT WATER SYSTEM'S RE-CIRCULATING CIRCUIT PIPING: NSF / ANSI 61-G CERTIFIED 2-32 PSID, 400 PSIG COLD WORKING PRESSURE, 180 °F RATED MAXIMUM OPERATING TEMPERATURE, 300 STAINLESS STEEL CONSTRUCTION WITH NICKEL PLATED UNION, FACTORY SET FLOW CONTROL CARTRIDGE SET TO SPECIFIED FLOW-RATE TO WITHIN 5% ACCURACY MINIMUM. COMPLETE INSTALLATION WITH SHUT-OFF BALL VALVES, INLINE 20 MESH STRAINER, AND DOWNSTREAM CHECK VALVE TO ENABLE CLEANING OF STRAINER AND CARTRIDGE REPLACEMENT WITHOUT CUTTING OR DRAINING OF PIPE. MANUFACTURED BY FLOW DESIGN INC. MODEL ICSS, OR EQUIVALENT BY NEXUS OR GRISWOLD.
    k. CALIBRATED BALANCING VALVES INSTALLED AT DOMESTIC HOT WATER SYSTEM'S RE-CIRCULATING PUMP: 2 INCHES AND SMALLER: WORKING PRESSURE: 125 PSIG. MAXIMUM OPERATING TEMPERATURE: 250 DEGREES F. BRONZE BODY, BRASS BALL CONSTRUCTION WITH CALIBRATED ORIFICE. THREADED END CONNECTIONS. EQUIP WITH READOUT VALVES TO FACILITATE THE CONNECTING OF A DIFFERENTIAL METER. READOUT VALVES SHALL HAVE INTEGRAL EPT CHECK VALVE. BALANCING VALVE SHALL HAVE INDEXING POINTER, CALIBRATED NAMEPLATE, AND EPT O-RING SEALS. MANUFACTURED BY BELL AND GOSSETT MODEL CB OR EQUIVALENT BY ARMSTRONG, NEXUS, FDI, OR VICTAULIC.
20. STRAINERS
    a. 2 INCHES AND SMALLER, 'Y' TYPE PIPE LINE STRAINER, BRASS OR BRONZE BODY, THREADED ENDS, 304 STAINLESS STEEL SCREEN WITH 20 MESH OPENINGS, 400 PSIG AT 210 DEGREE F. COMPLETE WITH SOLID RETAINER CAP AND GASKET. WATTS SERIES 777 OR EQUIVALENT BY CLA-VAL, CONBRACO, FEBCO, OR WILKINS.
    b. 2-1/2 INCHES AND LARGER 'Y' PATTERN PIPELINE STRAINER, NSF AND FDA APPROVED EPOXY COATED IRON BODY, 125 POUND FLANGED ENDS, BOLTED COVER, 200 PSIG WATER, OIL, GAS OPERATING PRESSURE, AND OF # 304 STAINLESS STEEL SCREEN. COMPLETE WITH BLOW DOWN CONNECTION WITH CLOSURE PLUG. WATTS SERIES 77F-DI-FDA-125 OR EQUIVALENT BY CLA-VAL, CONBRACO, FEBCO, OR WILKINS.
21. UNIONS
    a. UNIONS IN COPPER PIPING 2 INCHES AND SMALLER, CAST BRASS SOLDER FITTINGS WITH MACHINED AND LAPPED SEATS SUITABLE FOR 175 PSI WORKING PRESSURES.
    b. UNIONS ON ALL PIPING 2-1/2 INCHES AND LARGER: USE FLANGED CONNECTIONS. GASKETS USED WITH FLANGED FITTINGS: 1/16 INCH THICK, RING TYPE, COMPRESSED GRAPHITE SHEET.
    c. WHERE GROOVED JOINT PIPING SYSTEMS ARE UTILIZED, UNIONS ARE NOT REQUIRED. COUPLINGS SHALL SERVE AS UNIONS.
22. DIELECTRIC CONNECTIONS - PROVIDE AT CONNECTIONS BETWEEN COPPER AND FERROUS METAL PIPING MATERIALS IN DOMESTIC COLD WATER SYSTEMS ASTM F441, SCHEDULE 80, CPVC THREADED PIPE NIPPLES, 4 INCHES MINIMUM LENGTH. PROVIDE FOR DIELECTRIC CONNECTIONS IN PIPE SIZES 2 INCHES AND SMALLER. PROVIDE AT CONNECTIONS BETWEEN COPPER AND FERROUS PIPING IN DOMESTIC HOT WATER SYSTEMS VICTAULIC CLEARFLOW DIELECTRIC WATERWAY STYLE 47. FITTING CONSISTS OF ZINC PLATED CASING WITH A CHEMICALLY INERT NSF/FDA LISTED DIELECTRIC THERMOPLASTIC LINING.
23. WATER HAMMER ARRESTORS -BELLOWS TYPE, WITH STAINLESS STEEL CASING AND BELLOWS, TESTED AND CERTIFIED IN ACCORDANCE WITH PDI STANDARD WH-201. PROVIDE A PRESSURE REDUCING VALVE ON THE INLET TO THE DEVICE WHERE SYSTEM PRESSURES ARE ABOVE 80PSI. MANUFACTURER: JAY R. SMITH. OTHER ACCEPTABLE MANUFACTURERS ARE: JOSAM, WADE, AND ZURN.
24. EXPANSION COMPENSATORS:- FOR COPPER PIPE 2 INCHES AND SMALLER. CONSTRUCTED OF A MULTI-PLY STAINLESS STEEL BELLOWS WITH CARBON STEEL SHROUD WITH AN INTERNAL, POSITIVE, ANTI-TORQUE DEVICE. SOLDER JOINTS. MAXIMUM WORKING PRESSURE: 150 PSIG. MAXIMUM OPERATING TEMPERATURE: 500 DEGREES F. MAXIMUM STROKE: 1-3/4 INCH. METRAFLEX MODEL HPFF OR EQUIVALENT BY KEFLEX OR FLEXONICS.
25. FLEXIBLE CONNECTORS - FLEXIBLE CONNECTORS SHALL BE PROVIDED AT THE SUCTION AND DISCHARGE OF EACH PUMP THAT IS 1 HP OR LARGER. CONNECTORS SHALL BE CONSTRUCTED OF NEOPRENE, RUBBER, OR BRAIDED BRONZE, WITH CLASS 150 STANDARD FLANGES. FLEXIBLE CONNECTORS SHALL BE LINE SIZE AND SUITABLE FOR THE PRESSURE AND TEMPERATURE OF THE INTENDED SERVICE.
26. PIPE GUIDES:- GUIDES CONSISTING OF STEEL SEGMENTED SPIDER SIZED TO THE OUTSIDE DIAMETER OF THE PIPE OR INSULATION AND FREE TO MOVE AXIALLY AT THE SEGMENTED STEEL CYLINDER. PROVIDE A MINIMUM OF 2 GUIDES ON EACH SIDE OF EXPANSION COMPENSATORS OR EXPANSION JOINTS AND ELSE ELSEWHERE AS INDICATED. PROVIDE GUIDES OF LENGTH RECOMMENDED BY MANUFACTURER TO ALLOW REQUIRED TRAVEL. METRAFLEX OR EQUIVALENT BY KEFLEX, FEE AND MASON OR FLEXONICS.
27. PIPE ANCHORS: - INSTALL IN CONJUNCTION WITH GUIDES.

C. GAUGES

PRESSURE AND VACUUM INDICATING DIAL TYPE - ELASTIC ELEMENT: ASME B40.100.

D. THERMOMETERS

DIRECT-MOUNTED, METAL CASE, VAPOR ACTUATED THERMOMETERS: ASME B40.200. MERCURY SHALL NOT BE USED IN THERMOMETERS.

E. PIPE INSULATION MATERIAL

ACCEPTABLE MANUFACTURERS: OWENS-CORNING, KNAUF, CERTAINTEED, PITTSBURG-CORNING DOMESTIC HOT, HOT WATER RECIRC., & COLD WATER SHALL BE INSULATED WITH 1" GLASS FIBER NON-COMBUSTABLE PREFORMED INSULATION, ASTM C547 WITH A "K" VALUE OF .23" AT 75°F AND FACTORY APPLIED VAPOR BARRIER JACKET. VAPOR BARRIER JACKETS SHALL BE KRAFT REINFORCED WHITE VAPOR BARRIER WITH SELF-SEALING ADHESIVE JOINTS.

EXPOSED SANITARY DRAINS, DOMESTIC WATER, DOMESTIC HOT WATER, AND STOPS AT LAVATORIES SHALL BE INSULATED AND FINISHED WITH TRUEBRO MODEL NO. 102 "LAV-GUARD" OR BROCAR "TRAP-WRAP" WHITE INSULATION KIT.

F. FLOOR, CEILING, AND WALL PLATES

FIT ALL PIPE PASSING EXPOSED THROUGH WALLS, FLOORS, OR CEILINGS IN FINISHED ROOMS WITH STEEL OR BRASS ESCUTCHEONS. WHERE SURFACE IS TO RECEIVE A PAINT FINISH MAKE ESCUTCHEONS PRIME PAINTED; OTHERWISE MAKE ESCUTCHEONS NICKEL OR CHROME PLATED. WHERE PIPING IS INSULATED, FIT ESCUTCHEONS OUTSIDE INSULATION.

G. EQUIPMENT PADS

EXCEPT WHERE OTHERWISE NOTED, PROVIDE PADS FOR ALL FLOOR MOUNTED EQUIPMENT INSTALLED UNDER THIS DIVISION. MAKE ALL EQUIPMENT PADS A MINIMUM OF 4 INCHES THICK. CONSTRUCT EQUIPMENT PADS OF 5000 POUND CONCRETE COMPLETE WITH ALL NECESSARY ANCHOR BOLTS, SLEEVES ANCHOR PLATES, WASHERS AND NUTS. SMOOTH ALL EXPOSED PORTIONS OF PADS AND BEVEL CORNERS.

H. SLEEVES

WHERE PIPES PASS THROUGH MASONRY OR CONCRETE WALLS, SET MACHINE CUT STEEL PIPE SLEEVES 1 INCH LARGER THAN OUTSIDE DIAMETER OF PIPE, WITH ENDS OF SLEEVES FLUSH WITH WALL FACES. SLEEVES IN PARTITIONS OTHER THAN MASONRY OR CONCRETE WHERE FIRESTOPPING IS REQUIRED: 28 GAGE GALVANIZED STEEL SHEET. WHERE PIPES PASS THROUGH FLOORS, SET SCHEDULE 40 GALVANIZED STEEL PIPE SLEEVES 1 INCH LARGER THAN THE OUTSIDE DIAMETER OF THE PIPE. TOP OF SLEEVE TO BE 4 INCHES ABOVE FINISHED FLOOR IN MACHINE ROOMS AND WET FLOOR LOCATIONS. WHERE PIPES ARE INSULATED, PROVIDE SLEEVES LARGE ENOUGH TO ALLOW INSULATION TO PASS THROUGH SLEEVE. CENTER PIPES IN SLEEVES. PROVIDE FIRE STOPPING BETWEEN PIPE AND SLEEVE OR OPENING AS REQUIRED TO MAINTAIN THE INTEGRITY OF THE FIRE RATING OF ALL WALLS AND FLOORS.

I. ESCUTCHEON PLATES

PROVIDE ONE PIECE OR SPLIT HINGE METAL PLATES FOR PIPING ENTERING FLOORS, WALLS, AND CEILINGS IN EXPOSED SPACES. PROVIDE CHROMIUM-PLATED ON COPPER ALLOY PLATES OR POLISHED STAINLESS STEEL FINISH IN FINISHED SPACES. PROVIDE PAINT FINISH ON PLATES IN UNFINISHED SPACES.

J. PLUMBING IDENTIFICATION

1. NAMEPLATES- PROVIDE 0.125 INCH THICK MELAMINE LAMINATED PLASTIC NAMEPLATES, BLACK MATTE FINISH WITH WHITE CENTER CORE, FOR EQUIPMENT, GAGES, THERMOMETERS, AND VALVES; VALVES IN SUPPLIES TO FAUCETS WILL NOT REQUIRE NAMEPLATES, KEY NAMEPLATES TO A CHART AND SCHEDULE FOR EACH SYSTEM. FRAME CHARTS AND SCHEDULES UNDER GLASS AND PLACE WHERE DIRECTED NEAR EACH SYSTEM. FURNISH TWO COPIES OF EACH CHART AND SCHEDULE.
2. SELF-ADHESIVE PIPE LABELS: PRINTED PLASTIC WITH CONTACT-TYPE, PERMANENT-ADHESIVE BACKING. PIPE LABEL CONTENTS: INCLUDE IDENTIFICATION OF PIPING SERVICE USING SAME DESIGNATIONS OR ABBREVIATIONS AS USED ON DRAWINGS, PIPE SIZE, AND AN ARROW INDICATING FLOW DIRECTION.

K. INSTALLATION

1. THE PIPING SHALL BE EXTENDED TO FIXTURES, OUTLETS, AND EQUIPMENT. THE HOT-WATER AND COLD-WATER PIPING SYSTEM SHALL BE ARRANGED AND INSTALLED TO PERMIT DRAINING. THE SUPPLY LINE TO EACH ITEM OF EQUIPMENT OR FIXTURE, EXCEPT FAUCETS, FLUSH VALVES, OR OTHER CONTROL VALVES WHICH ARE SUPPLIED WITH INTEGRAL STOPS, SHALL BE EQUIPPED WITH A SHUTOFF VALVE TO ENABLE ISOLATION OF THE ITEM FOR REPAIR AND MAINTENANCE WITHOUT INTERFERING WITH OPERATION OF OTHER EQUIPMENT OR FIXTURES. SUPPLY PIPING TO FIXTURES, FAUCETS, HYDRANTS, SHOWER HEADS, AND FLUSHING DEVICES SHALL BE ANCHORED TO PREVENT MOVEMENT.
2. THE WORK SHALL BE CAREFULLY LAID OUT IN ADVANCE, AND UNNECESSARY CUTTING OF CONSTRUCTION SHALL BE AVOIDED. DAMAGE TO BUILDING, PIPING, WIRING, OR EQUIPMENT AS A RESULT OF CUTTING SHALL BE REPAIRED BY MECHANICS SKILLED IN THE TRADE INVOLVED.
3. PIPE OPENINGS SHALL BE CLOSED WITH CAPS OR PLUGS DURING INSTALLATION. FIXTURES AND EQUIPMENT SHALL BE TIGHTLY COVERED AND PROTECTED AGAINST DIRT, WATER, CHEMICALS, AND MECHANICAL INJURY. UPON COMPLETION OF THE WORK, THE FIXTURES, MATERIALS, AND EQUIPMENT SHALL BE THOROUGHLY CLEANED, ADJUSTED, AND OPERATED. SAFETY GUARDS SHALL BE PROVIDED FOR EXPOSED ROTATING EQUIPMENT.
4. PIPING SHALL BE INSTALLED AS INDICATED. PIPE SHALL BE ACCURATELY CUT AND WORKED INTO PLACE WITHOUT SPRINGING OR FORCING. STRUCTURAL PORTIONS OF THE BUILDING SHALL NOT BE WEAKENED. ABOVEGROUND PIPING SHALL RUN PARALLEL WITH THE LINES OF THE BUILDING, UNLESS OTHERWISE INDICATED. BRANCH PIPES FROM SERVICE LINES MAY BE TAKEN FROM TOP, BOTTOM, OR SIDE OF MAIN, USING CROSSOVER FITTINGS REQUIRED BY STRUCTURAL OR INSTALLATION CONDITIONS.
5. SUPPLY PIPES, VALVES, AND FITTINGS SHALL BE KEPT A SUFFICIENT DISTANCE FROM OTHER WORK AND OTHER SERVICES TO PERMIT NOT LESS THAN 1/2 INCH BETWEEN FINISHED COVERING ON THE DIFFERENT SERVICES. BARE AND INSULATED WATER LINES SHALL NOT BEAR DIRECTLY AGAINST BUILDING STRUCTURAL ELEMENTS SO AS TO TRANSMIT SOUND TO THE STRUCTURE OR TO PREVENT FLEXIBLE MOVEMENT OF THE LINES. WATER PIPE SHALL NOT BE BURIED IN OR UNDER FLOORS UNLESS SPECIFICALLY INDICATED OR APPROVED. CHANGES IN PIPE SIZES SHALL BE MADE WITH REDUCING FITTINGS. USE OF BUSHINGS WILL NOT BE PERMITTED EXCEPT FOR USE IN SITUATIONS IN WHICH STANDARD FACTORY FABRICATED COMPONENTS ARE FURNISHED TO ACCOMMODATE SPECIFIC ACCEPTED INSTALLATION PRACTICE. CHANGE IN DIRECTION SHALL BE MADE WITH FITTINGS.
6. PIPE DRAINS INDICATED SHALL CONSIST OF 3/4 INCH HOSE BIBB WITH RENEWABLE SEAT AND BALL VALVE AHEAD OF HOSE BIBB. AT OTHER LOW POINTS, 3/4 INCH BRASS PLUGS OR CAPS SHALL BE PROVIDED. DISCONNECTION OF THE SUPPLY PIPING AT THE FIXTURE IS AN ACCEPTABLE DRAIN.
7. ALLOWANCE SHALL BE MADE THROUGHOUT FOR EXPANSION AND CONTRACTION OF WATER PIPE. BRANCH CONNECTIONS FROM RISERS SHALL BE MADE WITH AMPLE SWING OR OFFSET TO AVOID UNDUE STRAIN ON FITTINGS OR SHORT PIPE LENGTHS. HORIZONTAL RUNS OF PIPE OVER 50 FEET IN LENGTH SHALL BE ANCHORED TO THE WALL OR THE SUPPORTING CONSTRUCTION ABOUT MIDWAY ON THE RUN. SUFFICIENT FLEXIBILITY SHALL BE PROVIDED ON BRANCH RUNOUTS FROM MAINS AND RISERS TO PROVIDE FOR EXPANSION AND CONTRACTION OF PIPING. FLEXIBILITY SHALL BE PROVIDED BY INSTALLING ONE OR MORE TURNS IN THE LINE.
8. COMMERCIAL-TYPE WATER HAMMER ARRESTERS SHALL BE PROVIDED ON HOT- AND COLD-WATER SUPPLIES AND PRECISE LOCATION AND SIZING TO BE IN ACCORDANCE WITH PDI WH 201. WATER HAMMER ARRESTERS, WHERE CONCEALED, SHALL BE ACCESSIBLE BY MEANS OF ACCESS DOORS OR REMOVABLE PANELS. COMMERCIAL-TYPE WATER HAMMER ARRESTERS SHALL CONFORM TO ASSE 1010. VERTICAL CAPPED PIPE COLUMNS WILL NOT BE PERMITTED.
9. FIRE SEAL - WHERE PIPES PASS THROUGH FIRE WALLS, FIRE-PARTITIONS, FIRE-RATED PIPE CHASE WALLS OR FLOORS ABOVE GRADE, A FIRE SEAL SHALL BE PROVIDED.
10. INSTALL AIR ADMITTANCE VALVES IN ACCORDANCE WITH CODE AND MANUFACTURER'S INSTRUCTIONS. INSTALL AIR ADMITTANCE VALVES AFTER DRAINAGE AND WASTE SYSTEM HAS BEEN ROUGHED IN. LOCATE VALVES MINIMUM 4 INCHES ABOVE HORIZONTAL BRANCH DRAIN OR FIXTURE DRAIN BEING VENTED. INSTALL VALVES IN ACCESSIBLE LOCATIONS. CONNECT VALVES TO PIPING IN ACCORDANCE WITH MANUFACTURER'S INSTRUCTIONS. INSTALL VALVES IN UPRIGHT POSITION, WITHIN 15 DEGREES OF TRUE VERTICAL. EXTEND MINIMUM OF ONE VENT TO OPEN ATMOSPHERE FOR EACH BUILDING DRAINAGE SYSTEM. DO NOT INSTALL VALVES IN SUPPLY AND RETURN AIR PLENUMS.
11. INSTALL AIR-GAP FITTINGS ON DRAINING-TYPE BACKFLOW PREVENTERS AND ON INDIRECT-WASTE PIPING DISCHARGE INTO SANITARY DRAINAGE SYSTEM.
12. HANGERS USED TO SUPPORT PIPING 2 INCHES AND LARGER SHALL BE FABRICATED TO PERMIT ADEQUATE ADJUSTMENT AFTER ERECTION WHILE STILL SUPPORTING THE LOAD. PIPE GUIDES AND ANCHORS SHALL BE INSTALLED TO KEEP PIPES IN ACCURATE ALIGNMENT, TO DIRECT THE EXPANSION MOVEMENT, AND TO PREVENT BUCKLING, SWAYING, AND UNDUE STRAIN. PIPING SUBJECTED TO VERTICAL MOVEMENT WHEN OPERATING TEMPERATURES EXCEED AMBIENT TEMPERATURES SHALL BE SUPPORTED BY VARIABLE SPRING HANGERS AND SUPPORTS OR BY CONSTANT SUPPORT HANGERS IN THE SUPPORT OF MULTIPLE PIPE RUNS ON A COMMON BASE MEMBER, A CLIP OR CLAMP SHALL BE USED WHERE EACH PIPE CROSSES THE BASE SUPPORT MEMBER. SPACING OF THE BASE SUPPORT MEMBERS SHALL NOT EXCEED THE HANGER AND SUPPORT SPACING REQUIRED FOR AN INDIVIDUAL PIPE IN THE MULTIPLE PIPE RUN. THREADED SECTIONS OF RODS SHALL NOT BE FORMED OR BENT.
13. PIPE HANGERS, INSERTS, AND SUPPORTS
    a. INSTALLATION OF PIPE HANGERS, INSERTS AND SUPPORTS SHALL CONFORM TO MSS SP-58 AND MSS SP-69, EXCEPT AS MODIFIED HEREIN.
    b. TYPES 5, 12, AND 26 SHALL NOT BE USED.
    c. TYPE 3 SHALL NOT BE USED ON INSULATED PIPE.
    d. TYPE 18 INSERTS SHALL BE SECURED TO CONCRETE FORMS BEFORE CONCRETE IS PLACED. CONTINUOUS INSERTS WHICH ALLOW MORE ADJUSTMENT MAY BE USED IF THEY OTHERWISE MEET THE REQUIREMENTS FOR TYPE 18 INSERTS.
    e. TYPE 19 AND 23 C-CLAMPS SHALL BE TORQUED PER MSS SP-69 AND SHALL HAVE BOTH LOCKNUTS AND RETAINING DEVICES FURNISHED BY THE MANUFACTURER.
    f. FIELD-FABRICATED C-CLAMP BODIES OR RETAINING DEVICES ARE NOT ACCEPTABLE.
    g. TYPE 20 ATTACHMENTS USED ON ANGLES AND CHANNELS SHALL BE FURNISHED WITH AN ADDED MALLEABLE-IRON HEEL PLATE OR ADAPTER.
    h. TYPE 24 MAY BE USED ONLY ON TRAPEZE HANGER SYSTEMS OR ON FABRICATED FRAMES.
    i. TYPE 39 SADDLES SHALL BE USED ON INSULATED PIPE 4 INCHES AND LARGER WHEN THE TEMPERATURE OF THE MEDIUM IS 60 DEGREES F OR HIGHER. TYPE 39 SADDLES SHALL BE WELDED TO THE PIPE.
    j. TYPE 40 SHIELDS SHALL:
       - BE USED ON INSULATED PIPE LESS THAN 4 INCHES.
       - BE USED ON INSULATED PIPE 4 INCHES AND LARGER WHEN THE TEMPERATURE OF THE MEDIUM IS 60 DEGREES F OR LESS.
       - HAVE A HIGH DENSITY INSERT FOR ALL PIPE SIZES. HIGH DENSITY INSERTS SHALL HAVE A DENSITY OF 8 PCF OR GREATER.
    k. HORIZONTAL PIPE SUPPORTS SHALL BE SPACED AS SPECIFIED IN MSS SP-69 AND A SUPPORT SHALL BE INSTALLED NOT OVER 1 FOOT FROM THE PIPE FITTING JOINT AT EACH CHANGE IN DIRECTION OF THE PIPING. PIPE SUPPORTS SHALL BE SPACED NOT OVER 5 FEET APART AT VALVES. HORIZONTAL PIPE RUNS SHALL INCLUDE ALLOWANCES FOR EXPANSION AND CONTRACTION.
    l. VERTICAL PIPE SHALL BE SUPPORTED AT EACH FLOOR, EXCEPT AT SLAB-ON-GRADE, AT INTERVALS OF NOT MORE THAN 15 FEET (FOR STEEL PIPING, 10 FEET MAXIMUM FOR COPPER SYSTEMS) NOR MORE THAN 8 FEET FROM END OF RISERS, AND AT VENT TERMINATIONS. VERTICAL PIPE RISERS SHALL INCLUDE ALLOWANCES FOR EXPANSION AND CONTRACTION.
    m. TYPE 35 GUIDES USING STEEL, REINFORCED POLYTETRAFLUOROETHYLENE (PTFE) OR GRAPHITE SLIDES SHALL BE PROVIDED TO ALLOW LONGITUDINAL PIPE MOVEMENT. SLIDE MATERIALS SHALL BE SUITABLE FOR THE SYSTEM OPERATING TEMPERATURES, ATMOSPHERIC CONDITIONS, AND BEARING LOADS ENCOUNTERED. LATERAL RESTRAINTS SHALL BE PROVIDED AS NEEDED. WHERE STEEL SLIDES DO NOT REQUIRE PROVISIONS FOR LATERAL RESTRAINT THE FOLLOWING MAY BE USED:
       - ON PIPE 4 INCHES AND LARGER WHEN THE TEMPERATURE OF THE MEDIUM IS 60 DEGREES F OR HIGHER, A TYPE 39 SADDLE, WELDED TO THE PIPE, MAY FREELY REST ON A STEEL PLATE.
       - ON PIPE LESS THAN 4 INCHES A TYPE 40 SHIELD, ATTACHED TO THE PIPE OR INSULATION, MAY FREELY REST ON A STEEL PLATE.
       - ON PIPE 4 INCHES AND LARGER CARRYING MEDIUM LESS THAT 60 DEGREES F A TYPE 40 SHIELD, ATTACHED TO THE PIPE OR INSULATION, MAY FREELY REST ON A STEEL PLATE.
    n. PIPE HANGERS ON HORIZONTAL INSULATED PIPE SHALL BE THE SIZE OF THE OUTSIDE DIAMETER OF THE INSULATION. THE INSULATION SHALL BE CONTINUOUS THROUGH THE HANGER ON ALL PIPE SIZES AND APPLICATIONS.
    o. WHERE THERE ARE HIGH SYSTEM TEMPERATURES AND WELDING TO PIPING IS NOT DESIRABLE, THE TYPE 35 GUIDE SHALL INCLUDE A PIPE CRADLE WELDED TO THE GUIDE STRUCTURE AND STRAPPED SECURELY TO THE PIPE. THE PIPE SHALL BE SEPARATED FROM THE SLIDE MATERIAL BY AT LEAST 4 INCHES OR BY AN AMOUNT ADEQUATE FOR THE INSULATION, WHICHEVER IS GREATER.
    p. HANGERS AND SUPPORTS FOR PLASTIC PIPE SHALL NOT COMPRESS, DISTORT, CUT OR ABRADE THE PIPING, AND SHALL ALLOW FREE MOVEMENT OF PIPE EXCEPT WHERE OTHERWISE REQUIRED IN THE CONTROL OF EXPANSION/CONTRACTION.
    q. STRUCTURAL ATTACHMENTS - ATTACHMENT TO BUILDING STRUCTURE CONCRETE AND MASONRY SHALL BE BY CAST-IN CONCRETE INSERTS, BUILT-IN ANCHORS, OR MASONRY ANCHOR DEVICES. INSERTS AND ANCHORS SHALL BE APPLIED WITH A SAFETY FACTOR NOT LESS THAN 5. SUPPORTS SHALL NOT BE ATTACHED TO METAL DECKING. SUPPORTS SHALL NOT BE ATTACHED TO THE UNDERSIDE OF CONCRETE FILLED FLOOR OR CONCRETE ROOF DECKS UNLESS APPROVED BY THE STRUCTURAL ENGINEER. MASONRY ANCHORS FOR OVERHEAD APPLICATIONS SHALL BE CONSTRUCTED OF FERROUS MATERIALS ONLY.
15. PIPE CLEANOUTS -PIPE CLEANOUTS SHALL BE THE SAME SIZE AS THE PIPE EXCEPT THAT CLEANOUT PLUGS LARGER THAN 4 INCHES WILL NOT BE REQUIRED. CLEANOUTS IN CONNECTION WITH OTHER PIPE, WHERE INDICATED, SHALL BE T-PATTERN, 90-DEGREE BRANCH DRAINAGE FITTINGS WITH CAST-BRASS SCREW PLUGS, EXCEPT PLASTIC PLUGS SHALL BE INSTALLED IN PLASTIC PIPE. CLEANOUT TEE BRANCHES WITH SCREW PLUG SHALL BE INSTALLED AT THE FOOT OF SOIL AND WASTE STACKS, AT THE FOOT OF INTERIOR DOWNSPOUTS, ON EACH CONNECTION TO BUILDING STORM DRAIN WHERE INTERIOR DOWNSPOUTS ARE INDICATED, AND ON EACH BUILDING DRA

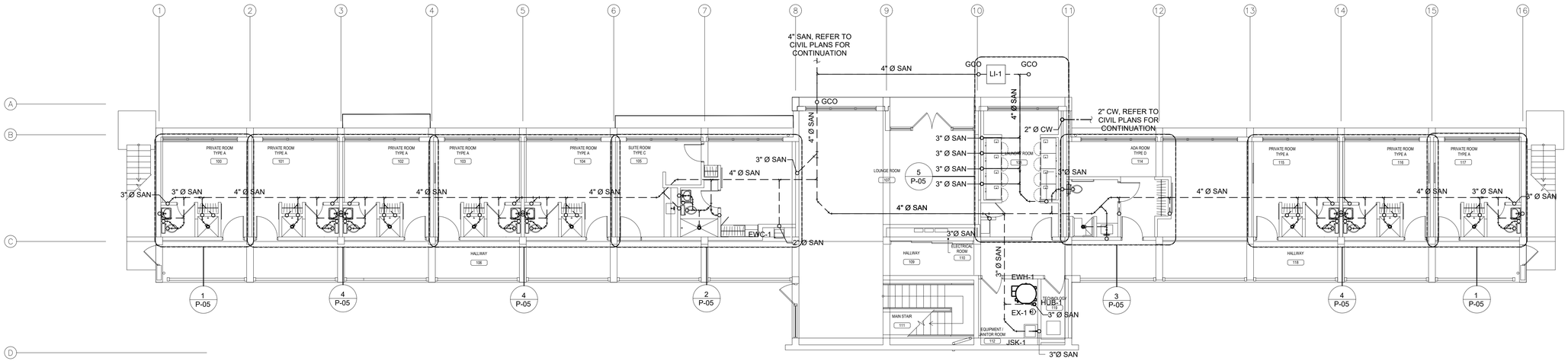

1 PLUMBING UNDERGROUND PIPING PLAN
SCALE: 1/8" = 1'-0"

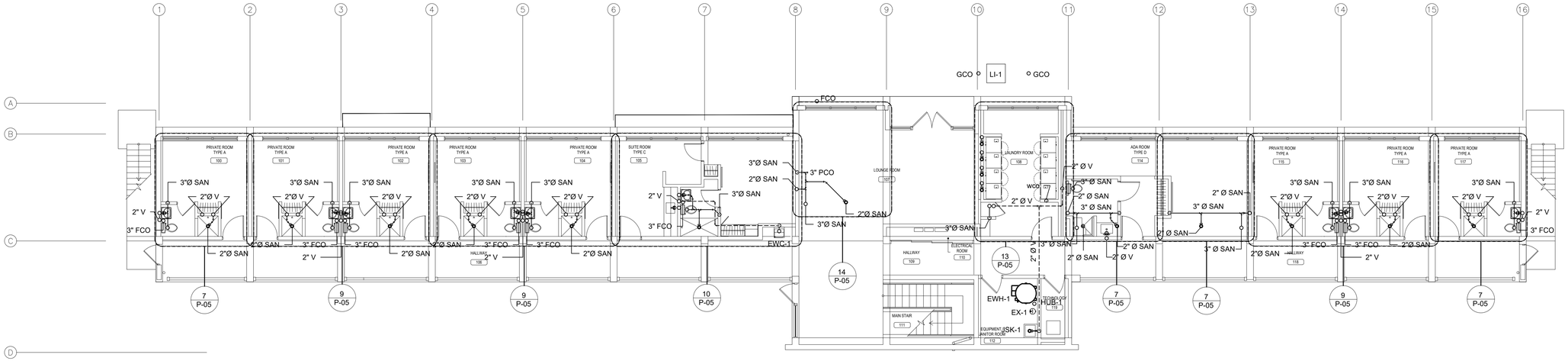

2 GRAVITY PIPING - FIRST FLOOR
SCALE: 1/8" = 1'-0"

PLUMBING NOTES

1. THESE DRAWINGS ARE DIAGRAMMATIC AND INDICATE THE GENERAL EXTENT OF THE WORK. THE CONTRACTOR SHALL BE RESPONSIBLE FOR COORDINATION AND PROPER INSTALLATION OF ALL PLUMBING SYSTEMS. THE CONTRACTOR SHALL PROVIDE ALL NECESSARY OFFSETS AND FITTINGS WHICH MAY BE REQUIRED DUE TO SPACE CONSTRAINTS OR OTHER CONDITIONS.
2. THE CONTRACTOR SHALL PROVIDE ALL MISCELLANEOUS SUPPORTING STEEL FOR THE PROPER INSTALLATION OF ALL PLUMBING SYSTEMS.
3. THE CONTRACTOR SHALL COORDINATE FLOOR, WALL, AND ROOF PENETRATIONS WITH GENERAL TRADES.
4. THE CONTRACTOR SHALL VERIFY ALL CLEARANCES PRIOR TO THE FABRICATION OF ANY WORK.
5. PIPING SHALL NOT BE LOCATED ABOVE ANY ELECTRICAL PANELS OR EQUIPMENT.

CODE COMPLIANCE: THIS PROJECT HAS BEEN DESIGNED IN ACCORDANCE WITH THE PUERTO RICO EXISTING BUILDING CODE 2018 EDITION. CONTRACTORS ARE NOT ALLOWED TO MAKE CHANGES TO THIS PROJECT WITHOUT WRITTEN AUTHORIZATION OF THE ARCHITECT OF RECORD.

FJM Engineering, psc
Consulting Engineers
352 San Claudio St., STE 1, PMB 367, San Juan, PR 00926-4144
Tel: (787) 722-4641 / Cel: (787) 632-1494
E-mail: FMate@fjm-eng.com

FRANCISCO J. MATE INGENIERO LICENCIADO LIC. #13947 PUERTO RICO

Yo, Francisco J. Mate Cabrera, Lic. #13947, certifico que soy el profesional que diseñó estos planos y las especificaciones complementarias. Certifico además que estos planos y especificaciones cumplen con las disposiciones aplicables del Reglamento para Regular y Administrar la Profesión de Ingeniería y los Códigos de Construcción Vigentes de las Corporaciones Públicas con jurisdicción Certifico, además, que en la preparación de estos planos y especificaciones no incurrí en conducta que sea contraria a lo dispuesto en la Ley Núm. 1 de 6 de enero de 2004, según enmendada, conocida como la "Ley de Ética Gubernamental de Puerto Rico de 2011" y con la (Ley Núm. 319 de 15 de mayo de 1938, según enmendada, Ley Núm. 96 de 6 de julio de 1978, según enmendada, conocidas como "Ley de Tasificación de los hechos que se haya producido fraude, dolo, representación falsa o mala fe de parte mía, mis agentes o empleados, o por otras personas con mi conocimiento, me hacen responsable ante cualquier parte afectada y/o disciplinaria por la OGPe.
Reconozco que cualquier declaración falsa o falsificación de los hechos que se haya producido en el proceso de revisión de estos planos por mí, mis agentes o empleados, o por otras personas con mi conocimiento, me hacen responsable ante cualquier parte afectada y/o disciplinaria por la OGPe.

CERTIFIED:

arquiteg
ARQUITECTOS
INGENIEROS
PLANIFICADORES

CONSTRUCTION AND FACILITIES MANAGEMENT OFFICE

PUERTO RICO ARMY NATIONAL GUARD
#552 BORINQUEN TRAIL, FORT BUCHANAN, PUERTO RICO 00934

PROJECT:
RESTORATION REPAIR OF BUILDING 149, FATC I P/N: 432122
FORT ALLEN TRAINING CENTER, JUANA DIAZ, PUERTO RICO

NO.	DESCRIPTION	DATE

REVISIONS

NO.	DESCRIPTION	DATE

100% BIDDING SET
NOT FOR CONSTRUCTION
BY: V.M.V. DATE: NOV 04, 2024

DESIGN:
VÍCTOR M. VILLEGAS
ANDRÉS M. VILLEGAS
GILBERTO A. MENDOZA
CARLA G. VILLARRUBIA
ELIAS VALDES
MARIELA SUÁREZ
JUAN CAMILO OSORIO

SUPERVISOR: VICTOR SANCHEZ, P.E.

SHEET NUMBER: P-02

SHEET TITLE: SANITARY PIPING PLANS - FIRST FLOOR

SHEET: | TOTAL SHEETS: OF

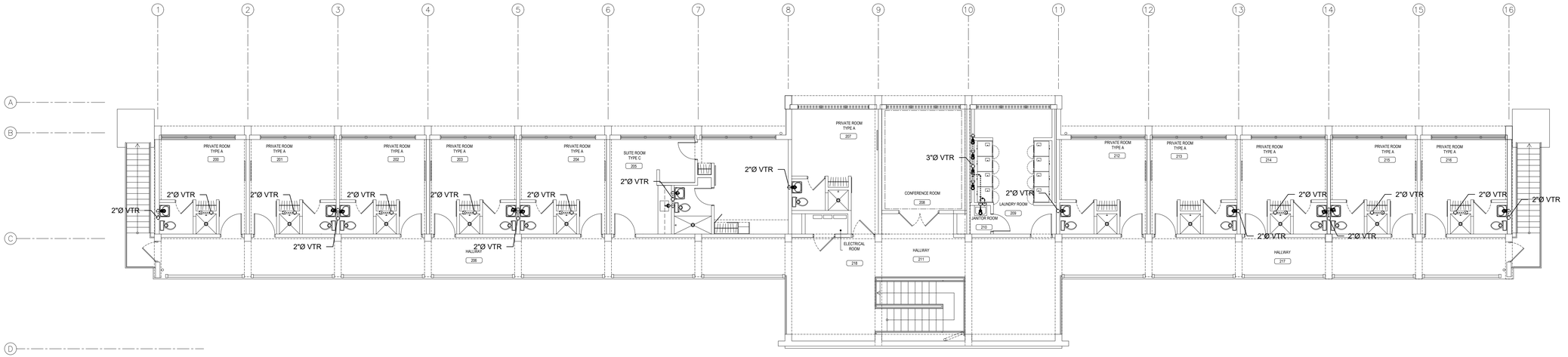

1 GRAVITY PIPING - SECOND FLOOR
SCALE: 1/8" = 1'-0"

PLUMBING NOTES

1. THESE DRAWINGS ARE DIAGRAMMATIC AND INDICATE THE GENERAL EXTENT OF THE WORK. THE CONTRACTOR SHALL BE RESPONSIBLE FOR COORDINATION AND PROPER INSTALLATION OF ALL PLUMBING SYSTEMS. THE CONTRACTOR SHALL PROVIDE ALL NECESSARY OFFSETS AND FITTINGS WHICH MAY BE REQUIRED DUE TO SPACE CONSTRAINTS OR OTHER CONDITIONS.
2. THE CONTRACTOR SHALL PROVIDE ALL MISCELLANEOUS SUPPORTING STEEL FOR THE PROPER INSTALLATION OF ALL PLUMBING SYSTEMS.
3. THE CONTRACTOR SHALL COORDINATE FLOOR, WALL, AND ROOF PENETRATIONS WITH GENERAL TRADES.
4. THE CONTRACTOR SHALL VERIFY ALL CLEARANCES PRIOR TO THE FABRICATION OF ANY WORK.
5. PIPING SHALL NOT BE LOCATED ABOVE ANY ELECTRICAL PANELS OR EQUIPMENT.

FJM Engineering, psc
Consulting Engineers
352 San Claudio St., STE 1, PMB 367, San Juan, PR 00926-4144
Tel: (787) 722-4641 / Cel: (787) 632-1494
E-mail: FMate@fjm-eng.com

FRANCISCO J. MATE
INGENIERO LICENCIADO
LIC. #13947
PUERTO RICO

CODE COMPLIANCE: THIS PROJECT HAS BEEN DESIGNED IN ACCORDANCE WITH THE PUERTO RICO EXISTING BUILDING CODE 2018 EDITION. CONTRACTORS ARE NOT ALLOWED TO MAKE CHANGES TO THIS PROJECT WITHOUT WRITTEN AUTHORIZATION OF THE ARCHITECT OF RECORD.

Yo, Francisco J. Mate Cabrera, Lic. #13947, certifico que soy el profesional que diseño estos planos y las especificaciones complementarias. También, certifico que entiendo que dichos planos y especificaciones cumplen con las disposiciones aplicables del Reglamento Conjunto y las disposiciones aplicables de los Reglamentos y Códigos de Construcción Vigentes de las Agencias, Juntas Reglamentadoras, o Corporaciones Públicas con jurisdicción. Certifico, además, que en la preparación de estos planos y especificaciones se ha cumplido cabalmente con lo dispuesto en la Ley Núm. 14 de 8 de enero de 2004, según enmendada, conocida como la "Ley para la Inversión por la Industria Puertorriqueña" y con la [Ley Núm. 319 de 15 de mayo de 1938, según enmendada, Ley Núm. 96 de 6 de julio de 1978, según enmendada, según aplique]. Reconozco que cualquier declaración falsa o falsificación de los hechos que se haya producido por desconocimiento o por negligencia, ya sea por mí, mis agentes o empleados, o por otras personas con mi conocimiento, me hacen responsable de cualquier acción judicial y disciplinaria por la OGPe.

CERTIFIED:

arquiteg
ARQUITECTOS
INGENIEROS
PLANIFICADORES

CONSTRUCTION AND FACILITIES MANAGEMENT OFFICE

PUERTO RICO ARMY NATIONAL GUARD
#552 BORINQUENEER TRAIL, FORT BUCHANAN, PUERTO RICO 00934

PROJECT:
RESTORATION REPAIR OF BUILDING 149, FATC | P/N: 432122
FORT ALLEN TRAINING CENTER, JUANA DIAZ, PUERTO RICO

REVISIONS

NO.	DESCRIPTION	DATE	NO.	DESCRIPTION	DATE

100% BIDDING SET
NOT FOR CONSTRUCTION
BY: V.M.V. DATE: NOV 04, 2024

DESIGN:
VÍCTOR M. VILLEGAS
ANDRÉS M. VILLEGAS
GILBERTO A. MENDOZA
CARLA G. VILLARRUBIA
ELIAS VALDES
MARIELA SUÁREZ
JUAN CAMILO OSORIO

SUPERVISOR:
VICTOR SANCHEZ, P.E.

SHEET NUMBER:
P-03

SHEET TITLE:
GRAVITY PIPING PLAN - SECOND FLOOR

SHEET: TOTAL SHEETS:
OF

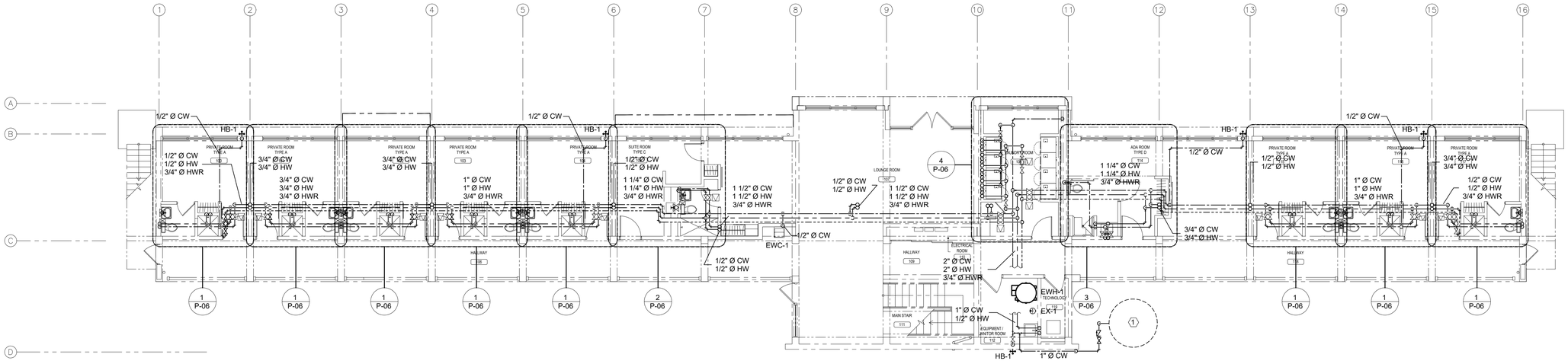

1 PRESSURE PIPING - FIRST FLOOR

SCALE: 1/8" = 1'-0"

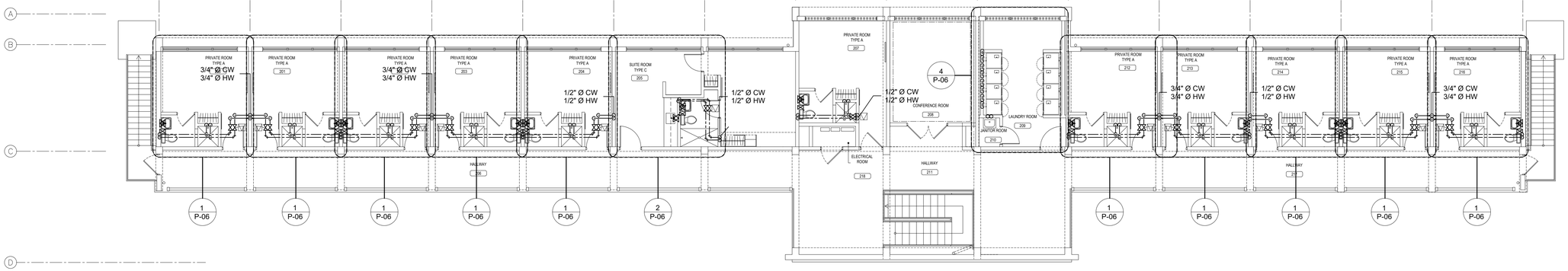

2 PRESSURE PIPING - SECOND FLOOR

SCALE: 1/8" = 1'-0"

PLUMBING NOTES

1. THESE DRAWINGS ARE DIAGRAMMATIC AND INDICATE THE GENERAL EXTENT OF THE WORK. THE CONTRACTOR SHALL BE RESPONSIBLE FOR COORDINATION AND PROPER INSTALLATION OF ALL PLUMBING SYSTEMS. THE CONTRACTOR SHALL PROVIDE ALL NECESSARY OFFSETS AND FITTINGS WHICH MAY BE REQUIRED DUE TO SPACE CONSTRAINTS OR OTHER CONDITIONS.
2. THE CONTRACTOR SHALL PROVIDE ALL MISCELLANEOUS SUPPORTING STEEL FOR THE PROPER INSTALLATION OF ALL PLUMBING SYSTEMS.
3. THE CONTRACTOR SHALL COORDINATE FLOOR, WALL, AND ROOF PENETRATIONS WITH GENERAL TRADES.
4. THE CONTRACTOR SHALL VERIFY ALL CLEARANCES PRIOR TO THE FABRICATION OF ANY WORK.
5. PIPING SHALL NOT BE LOCATED ABOVE ANY ELECTRICAL PANELS OR EQUIPMENT.

SHEET KEYNOTES

1. FIRE PROTECTION WATER STORAGE TANK. REFERENCE FIRE PROTECTION DRAWINGS FOR ADDITIONAL INFORMATION.

CODE COMPLIANCE: THIS PROJECT HAS BEEN DESIGNED IN ACCORDANCE WITH THE PUERTO RICO EXISTING BUILDING CODE 2018 EDITION. CONTRACTORS ARE NOT ALLOWED TO MAKE CHANGES TO THIS PROJECT WITHOUT WRITTEN AUTHORIZATION OF THE ARCHITECT OF RECORD.

FJM Engineering, psc
Consulting Engineers
352 San Claudio St., STE 1, PMB 367, San Juan, PR 00926-4144
Tel: (787) 722-4641 / Cel: (787) 632-1494
E-mail: FMate@fjm-eng.com

FRANCISCO J. MATE INGENIERO LICENCIADO LIC. #13947 PUERTO RICO

Yo, Francisco J. Mate Cabrera, Lic. #13947, certifico que soy el profesional que diseñó estos planos y las especificaciones complementarias. Certifico que los mismos cumplen con las disposiciones aplicables del Reglamento Conjunto y las especificaciones cumplen con las disposiciones aplicables del Reglamento Conjunto y los Códigos de Construcción Vigentes de las Corporaciones Públicas con jurisdicción Certifico, además, que en la preparación de estos planos y especificaciones no he incurrido en conducta según lo dispuesto en la Ley Núm. 1 de 6 de enero de 2004, según enmendada, conocida como la "Ley de la Oficina del Contralor de Puerto Rico de 2021" y con la (Ley Núm. 319 de 15 de mayo de 1938, según enmendada, Ley Núm. 96 de 6 de julio de 1988, según enmendada, conocida como "Ley de Ética Gubernamental de Puerto Rico de 2011". Reconozco que cualquier declaración falsa o falsificación de los hechos que se haya producido por mí, mis agentes o empleados, o por otras personas con mi conocimiento, me hacen responsable de cualquier acción disciplinaria y/o judicial por la OGPe.

CERTIFIED:

arquiteg
ARQUITECTOS
INGENIEROS
PLANIFICADORES

CONSTRUCTION AND FACILITIES MANAGEMENT OFFICE

PUERTO RICO ARMY NATIONAL GUARD
#552 BORINQUENEER TRAIL, FORT BUCHANAN, PUERTO RICO 00934

PROJECT:
RESTORATION REPAIR OF BUILDING 149, FATC I P/N: 432122
FORT ALLEN TRAINING CENTER, JUANA DIAZ, PUERTO RICO

NO.	DESCRIPTION	DATE
	REVISIONS	

100% BIDDING SET
NOT FOR CONSTRUCTION
BY: V.M.V. DATE: NOV 04, 2024

DESIGN:
VÍCTOR M. VILLEGAS
ANDRÉS M. VILLEGAS
GILBERTO A. MENDOZA
CARLA G. VILLARRUBIA
ELIAS VALDES
MARIELA SUÁREZ
JUAN CAMILO OSORIO

SUPERVISOR: VICTOR SANCHEZ, P.E.

SHEET NUMBER: P-04

SHEET TITLE: PRESSURE PIPING PLANS

SHEET: TOTAL SHEETS: OF

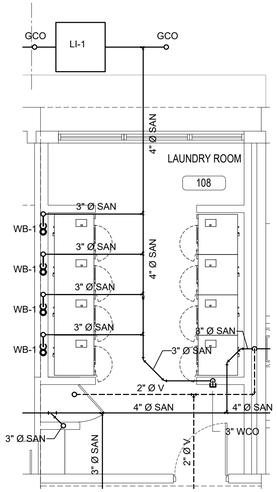

GRAVITY PIPING - LAUNDRY ROOM - FIRST FLOOR

5 SCALE: 1/4" = 1'-0"

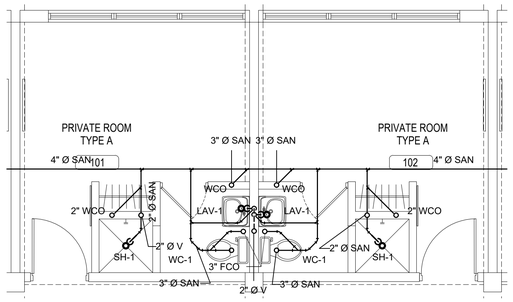

UNDERGROUND PIPING - BACK TO BACK TYPE "A" ROOM - FIRST FLOOR

4 SCALE: 1/4" = 1'-0"

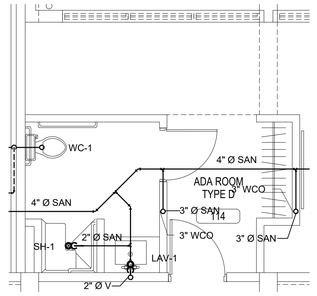

UNDERGROUND PIPING - TYPE "D" ROOM - FIRST FLOOR

3 SCALE: 1/4" = 1'-0"

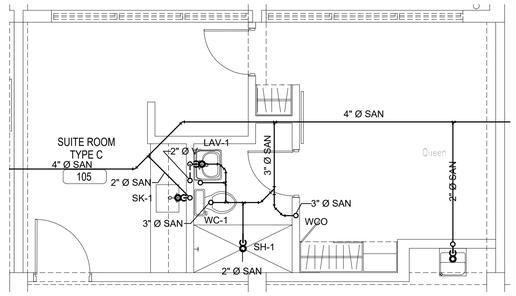

UNDERGROUND PIPING - TYPE "C" ROOM - FIRST FLOOR

2 SCALE: 1/4" = 1'-0"

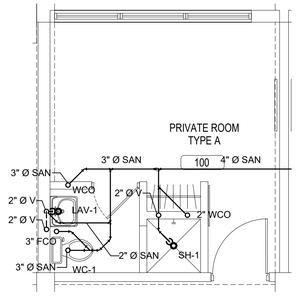

UNDERGROUND PIPING - TYPE "A" ROOM - FIRST FLOOR

1 SCALE: 1/4" = 1'-0"

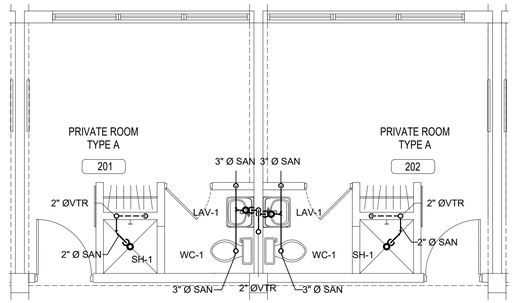

UNDERSLAB PIPING - BACK TO BACK TYPE "A" ROOM - SECOND FLOOR

9 SCALE: 1/4" = 1'-0"

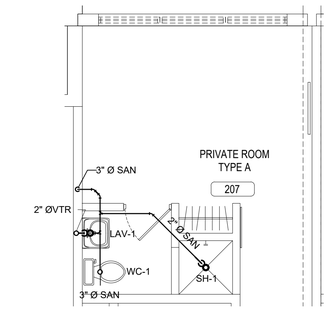

UNDERSLAB PIPING - TYPE "A" ROOM ALT - SECOND FLOOR

8 SCALE: 1/4" = 1'-0"

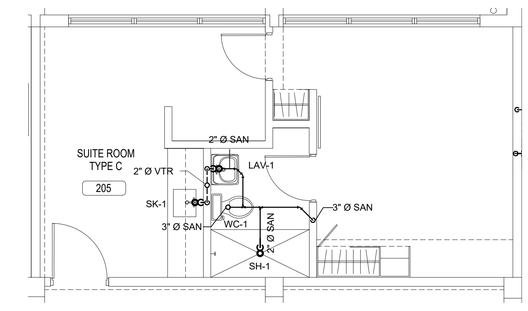

UNDERSLAB PIPING - TYPE "C" ROOM - SECOND FLOOR

7 SCALE: 1/4" = 1'-0"

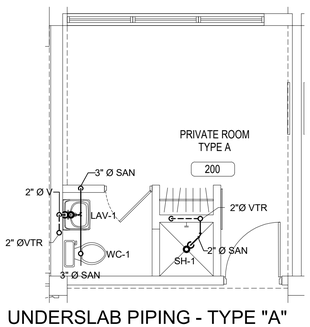

UNDERSLAB PIPING - TYPE "A" ROOM - SECOND FLOOR

6 SCALE: 1/4" = 1'-0"

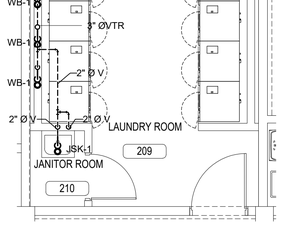

GRAVITY PIPING - LAUNDRY ROOM - SECOND FLOOR

10 SCALE: 1/4" = 1'-0"

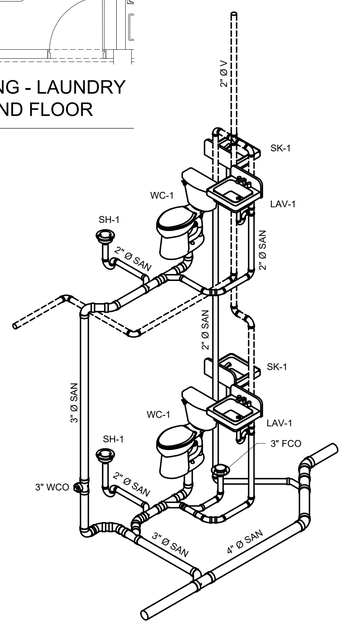

GRAVITY PIPING ISO - TYPE "C" ROOM STACK

15 SCALE: NTS

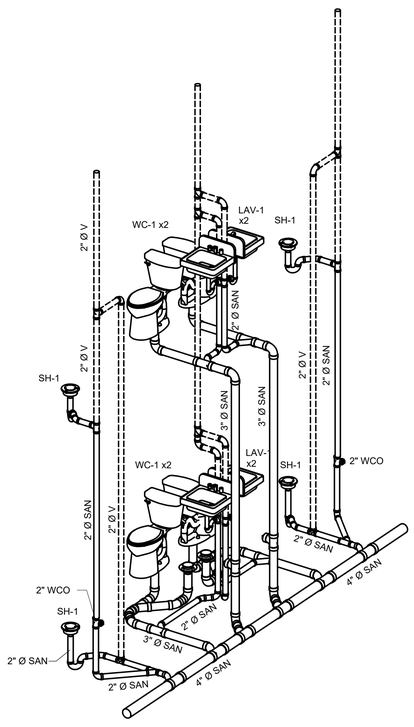

GRAVITY PIPING ISO - BACK TO BACK TYPE "A" ROOM STACK

14 SCALE: NTS

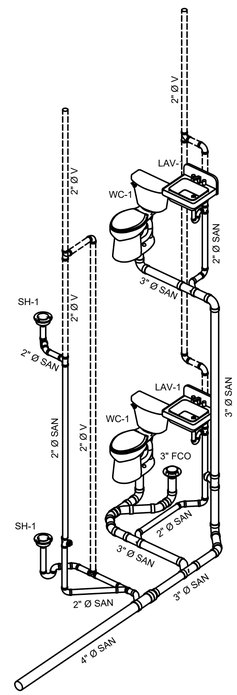

GRAVITY PIPING ISO - TYPE "A" ROOM STACK

13 SCALE: NTS

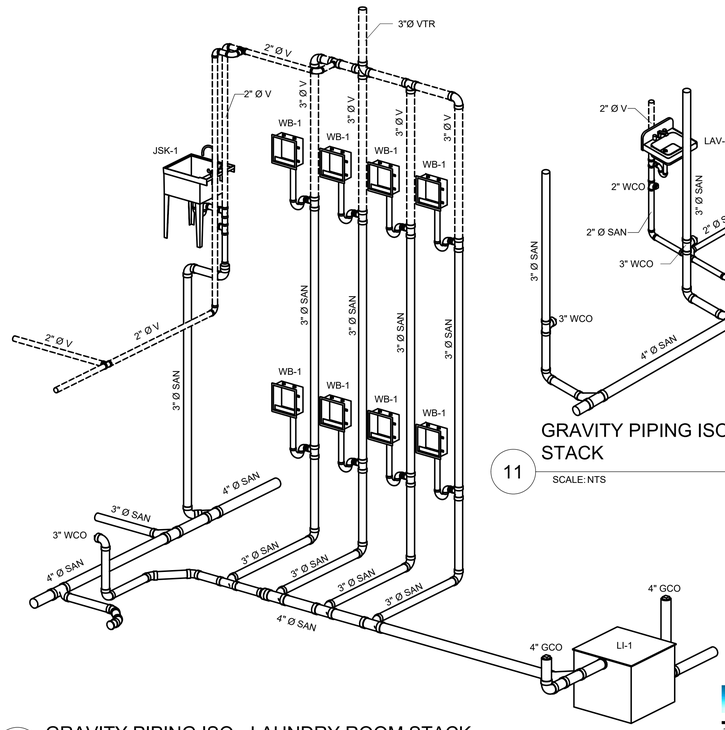

GRAVITY PIPING ISO - LAUNDRY ROOM STACK

12 SCALE: NTS

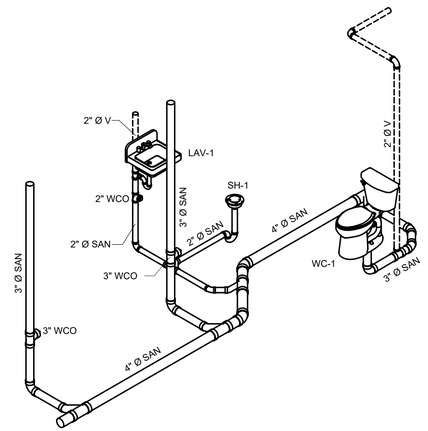

GRAVITY PIPING ISO - TYPE "C" ROOM STACK

11 SCALE: NTS

CODE COMPLIANCE: THIS PROJECT HAS BEEN DESIGNED IN ACCORDANCE WITH THE PUERTO RICO EXISTING BUILDING CODE 2018 EDITION. CONTRACTORS ARE NOT ALLOWED TO MAKE CHANGES TO THIS PROJECT WITHOUT WRITTEN AUTHORIZATION OF THE ARCHITECT OF RECORD.

Yo, Francisco J. Mate Cabrera, Lic. #13947, certifico que soy el profesional que diseñó estos planos y las especificaciones complementarias. Certifico además que los mismos cumplen con las disposiciones aplicables del Reglamento Conjunto de Permisos y Códigos de Construcción Vigentes de las Corporaciones Públicas con jurisdicción Certifico, además, que en la preparación de estos planos y especificaciones no incurrí en conducta según definida en la Ley Núm. 84 de 18 de junio de 2020, según enmendada, conocida como la "Ley Anticorrupción y Pro Ética Gubernamental de 2020" y en lo dispuesto en la Ley Núm. 1 de 3 de enero de 2012, según enmendada, conocida como la "Ley de Sociedades para Negocios Profesionales" y con la (Ley Núm. 319 de 15 de mayo de 1938, según enmendada, Ley Núm. 96 de 6 de julio de 1988, según enmendada) y según aplicable. Reconozco que cualquier declaración falsa o falsificación de los hechos que se haya producido en el diseño incorporado a estos planos por mí, mis agentes o empleados, o por otras personas con mi conocimiento, me hacen responsable ante la autoridad gubernamental disciplinaria por la OGPe.

CERTIFIED:

arquiteg
ARQUITECTOS
INGENIEROS
PLANIFICADORES

CONSTRUCTION AND FACILITIES MANAGEMENT OFFICE

PUERTO RICO ARMY NATIONAL GUARD
#552 BORINQUENEER TRAIL, FORT BUCHANAN, PUERTO RICO 00934

PROJECT:
RESTORATION REPAIR OF BUILDING 149, FATC I P/N: 432122
FORT ALLEN TRAINING CENTER, JUANA DIAZ, PUERTO RICO

NO.	DESCRIPTION	DATE

REVISIONS

NO.	DATE

100% BIDDING SET
NOT FOR CONSTRUCTION
BY: V.M.V. DATE: NOV 04, 2024

DESIGN:
VÍCTOR M. VILLEGAS
ANDRÉS M. VILLEGAS
GILBERTO A. MENDOZA
CARLA G. VILLARRUBIA
ELIAS VALDES
MARIELA SUÁREZ
JUAN CAMILO OSORIO

SUPERVISOR: VICTOR SANCHEZ, P.E.

SHEET NUMBER: P-05

SHEET TITLE: GRAVITY PIPING ENLARGED VIEWS

SHEET: TOTAL SHEETS: OF

FRANCISCO J. MATE
INGENIERO
LICENCIADO
LIC. #13947
PUERTO RICO

FJM Engineering, psc
Consulting Engineers
352 San Claudio St., STE 1, PMB 367, San Juan, PR 00926-4144
Tel: (787) 722-4641 / Cel: (787) 632-1494
E-mail: FMate@fjm-eng.com

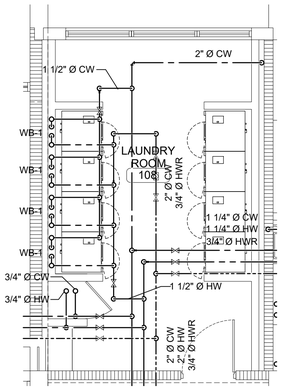

GRAVITY PIPING - LAUNDRY ROOM

4 SCALE: 1/4" = 1'-0"

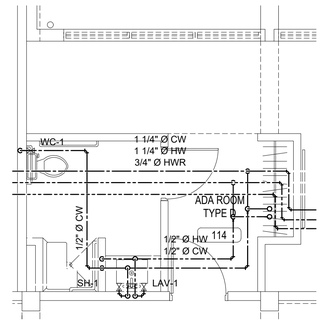

PRESSURE PIPING - TYPE "D" ROOM

3 SCALE: 1/4" = 1'-0"

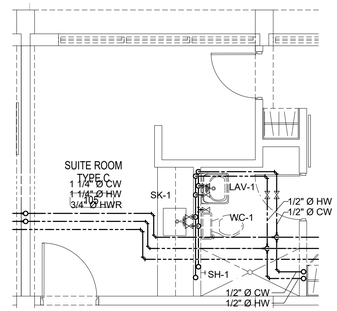

PRESSURE PIPING - TYPE "C" ROOM

2 SCALE: 1/4" = 1'-0"

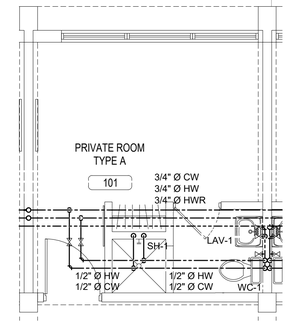

PRESSURE PIPING - TYPE "A" ROOM

1 SCALE: 1/4" = 1'-0"

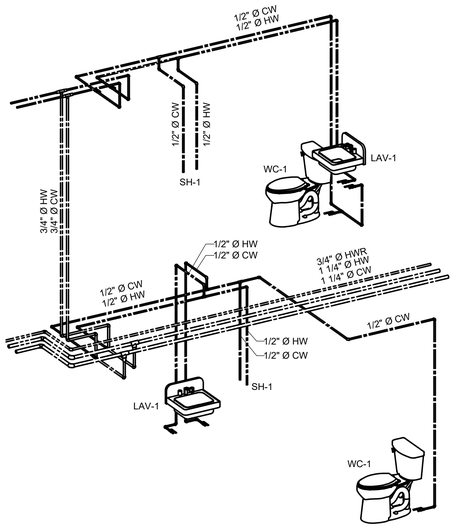

PRESSURE PIPING ISO - TYPE "D" ROOM STACK

8 SCALE: NTS

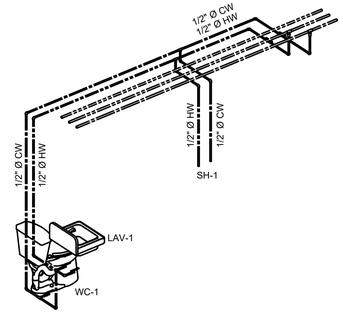

PRESSURE PIPING ISO - TYPE "A"

7 SCALE: NTS

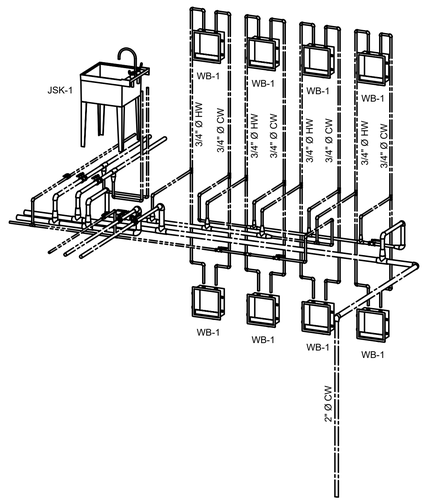

PRESSURE PIPING ISO - LAUNDRY ROOM STACK

6 SCALE: NTS

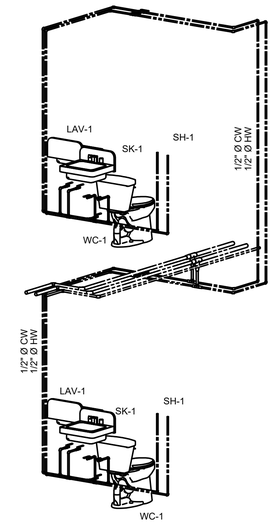

PRESSURE PIPING ISO - TYPE "C" ROOM STACK

5 SCALE: NTS

Yo, Francisco J. Maté Cabrera, Lic. #13947, certifico que soy el profesional que diseñó estos planos y las especificaciones complementarias. Certifico además que los mismos cumplen con las disposiciones del Reglamento para Obras de Construcción y Códigos de Construcción Vigentes de las Corporaciones Públicas con jurisdicción Certifico, además, que en la preparación de estos planos y especificaciones no he violado ningún derecho de autor según lo dispuesto en la Ley Núm. 1 de 8 de enero de 2004, según enmendada, conocida como la "Ley de Derecho de Autor y Derechos Conexos de 2004" y con la (Ley Núm. 310 de 15 de mayo de 1938, según enmendada, Ley Núm. 96 de 6 de julio de 1988, según enmendada, conocida como la "Ley de Propiedad Intelectual de Programas de Computadoras"). Reconozco que cualquier declaración falsa o falsificación de los hechos que se haya producido por el diseñador o por cualquier persona que actúe en mi nombre, mis agentes o empleados, o por otras personas con mi conocimiento, me hacen responsable de posible acción disciplinaria y/o judicial por la OGPe.

CERTIFIED:

arquiteg
ARQUITECTOS
INGENIEROS
PLANIFICADORES

CONSTRUCTION AND FACILITIES MANAGEMENT OFFICE

PUERTO RICO ARMY NATIONAL GUARD
#552 BORINQUENEER TRAIL, FORT BUCHANAN, PUERTO RICO 00934

PROJECT:
RESTORATION REPAIR OF BUILDING 149, FATC I P/N: 432122
FORT ALLEN TRAINING CENTER, JUANA DIAZ, PUERTO RICO

NO.	DESCRIPTION	REVISIONS DATE

NO.	DESCRIPTION	DATE

100% BIDDING SET
NOT FOR CONSTRUCTION
BY: V.M.V. DATE: NOV 04, 2024

DESIGN:
VÍCTOR M. VILLEGAS
ANDRÉS M. VILLEGAS
GILBERTO A. MENDOZA
CARLA G. VILLARRUBIA
ELIAS VALDES
MARIELA SUÁREZ
JUAN CAMILO OSORIO

SUPERVISOR:
VICTOR SANCHEZ, P.E.

SHEET NUMBER:
P-06

SHEET TITLE:
PRESSURE PIPING ENLARGED VIEWS

SHEET: | TOTAL SHEETS: OF

FJM Engineering, psc
Consulting Engineers
352 San Claudio St., STE 1, PMB 367, San Juan, PR 00926-4144
Tel: (787) 722-4641 / Cel: (787) 632-1494
E-mail: FMate@fjm-eng.com

FRANCISCO J. MATÉ INGENIERO LICENCIADO LIC. #13947 PUERTO RICO

CODE COMPLIANCE: THIS PROJECT HAS BEEN DESIGNED IN ACCORDANCE WITH THE PUERTO RICO EXISTING BUILDING CODE 2018 EDITION. CONTRACTORS ARE NOT ALLOWED TO MAKE CHANGES TO THIS PROJECT WITHOUT WRITTEN AUTHORIZATION OF THE ARCHITECT OF RECORD.

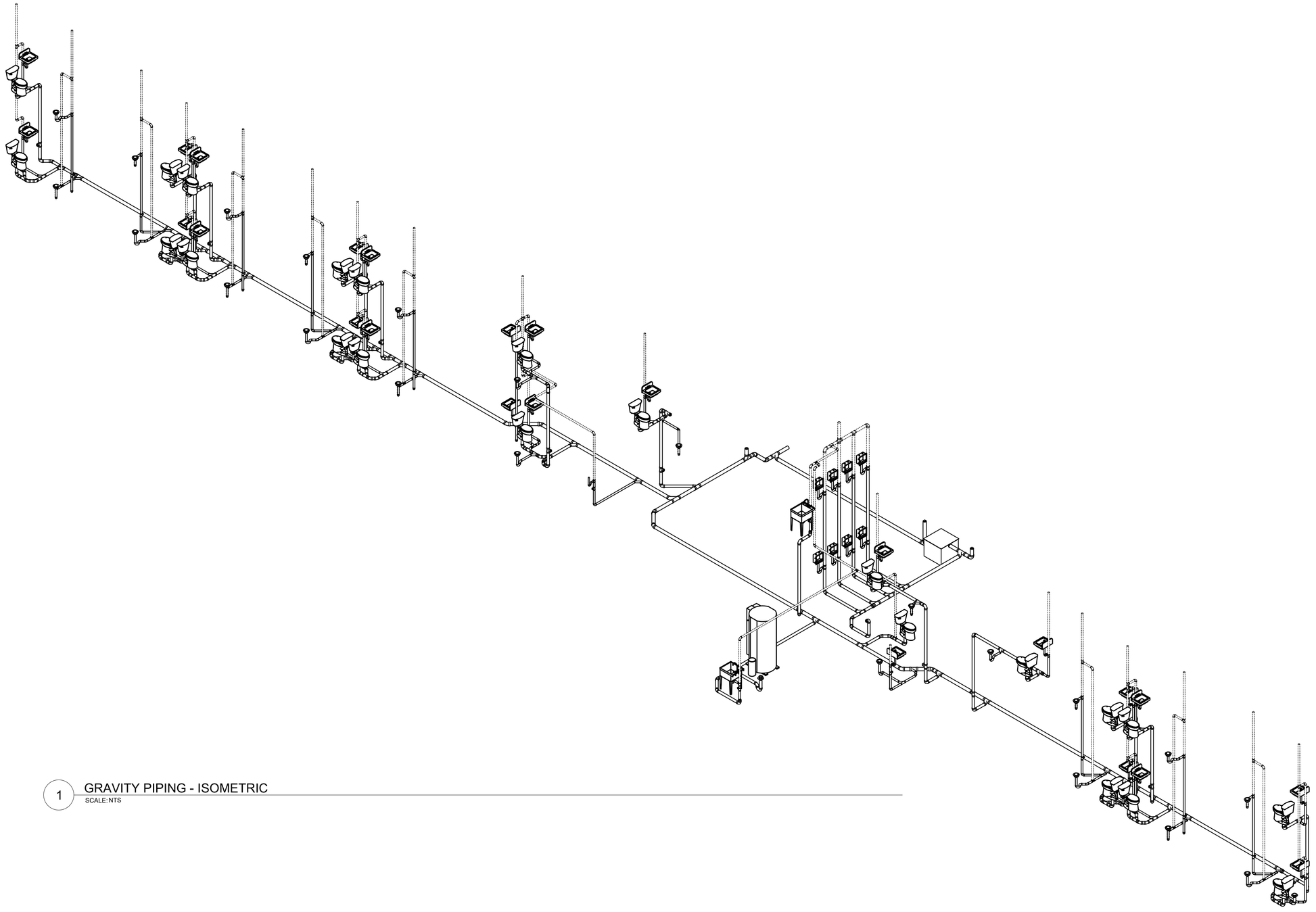

1 GRAVITY PIPING - ISOMETRIC
SCALE: NTS

FJM Engineering, psc
Consulting Engineers
352 San Claudio St., STE 1, PMB 367, San Juan, PR 00926-4144
Tel: (787) 722-4641 / Cel: (787) 632-1494
E-mail: FMate@fjm-eng.com

FRANCISCO J. MATE
INGENIERO LICENCIADO
LIC. #13947
PUERTO RICO

Yo, Francisco J. Mate Cabrera, Lic. #13947, certifico que soy el profesional que diseñó estos planos y las especificaciones complementarias. También, certifico que estos planos y especificaciones cumplen con las disposiciones aplicables del Reglamento Conjunto y las disposiciones aplicables de los Reglamentos y Códigos de Construcción Vigentes de las Agencias, Juntas Reglamentadoras, Corporaciones Públicas con jurisdicción Certifico, además, que en la preparación de estos planos y especificaciones se ha cumplido cabalmente con lo dispuesto en la Ley Núm. 14 de 8 de enero de 2004, según enmendada, conocida como la "Ley para la Inversión por la Industria Puertorriqueña" y con la Ley Núm. 319 de 15 de mayo de 1938, según enmendada, Ley Núm. 96 de 6 de julio de 1978, según enmendada, según aplique. Reconozco que cualquier declaración falsa o falsificación de los hechos que se haya producido por el Reglamento o por negligencia ya sea por mí, mis agentes o empleados, o por otras personas con mi conocimiento, me hacen responsable de cualquier acción judicial y disciplinaria por la OGPe.

CERTIFIED:

arquiteg
ARQUITECTOS
INGENIEROS
PLANIFICADORES

CONSTRUCTION AND FACILITIES MANAGEMENT OFFICE

PUERTO RICO ARMY NATIONAL GUARD
#552 BORINQUENEER TRAIL, FORT BUCHANAN, PUERTO RICO 00934

PROJECT:
RESTORATION REPAIR OF BUILDING 149, FATC | P/N: 432122
FORT ALLEN TRAINING CENTER, JUANA DIAZ, PUERTO RICO

REVISIONS

NO.	DESCRIPTION	DATE	NO.	DESCRIPTION	DATE

100% BIDDING SET
NOT FOR CONSTRUCTION
BY: V.M.V. DATE: NOV 04, 2024

DESIGN:
VÍCTOR M. VILLEGAS
ANDRÉS M. VILLEGAS
GILBERTO A. MENDOZA
CARLA G. VILLARRUBIA
ELIAS VALDES
MARIELA SUÁREZ
JUAN CAMILO OSORIO

SUPERVISOR:
VICTOR SANCHEZ, P.E.

SHEET NUMBER:
P-07

SHEET TITLE:
GRAVITY PIPING ISOMETRIC

SHEET: TOTAL SHEETS:
OF

CODE COMPLIANCE: THIS PROJECT HAS BEEN DESIGNED IN ACCORDANCE WITH THE PUERTO RICO EXISTING BUILDING CODE 2018 EDITION. CONTRACTORS ARE NOT ALLOWED TO MAKE CHANGES TO THIS PROJECT WITHOUT WRITTEN AUTHORIZATION OF THE ARCHITECT OF RECORD.

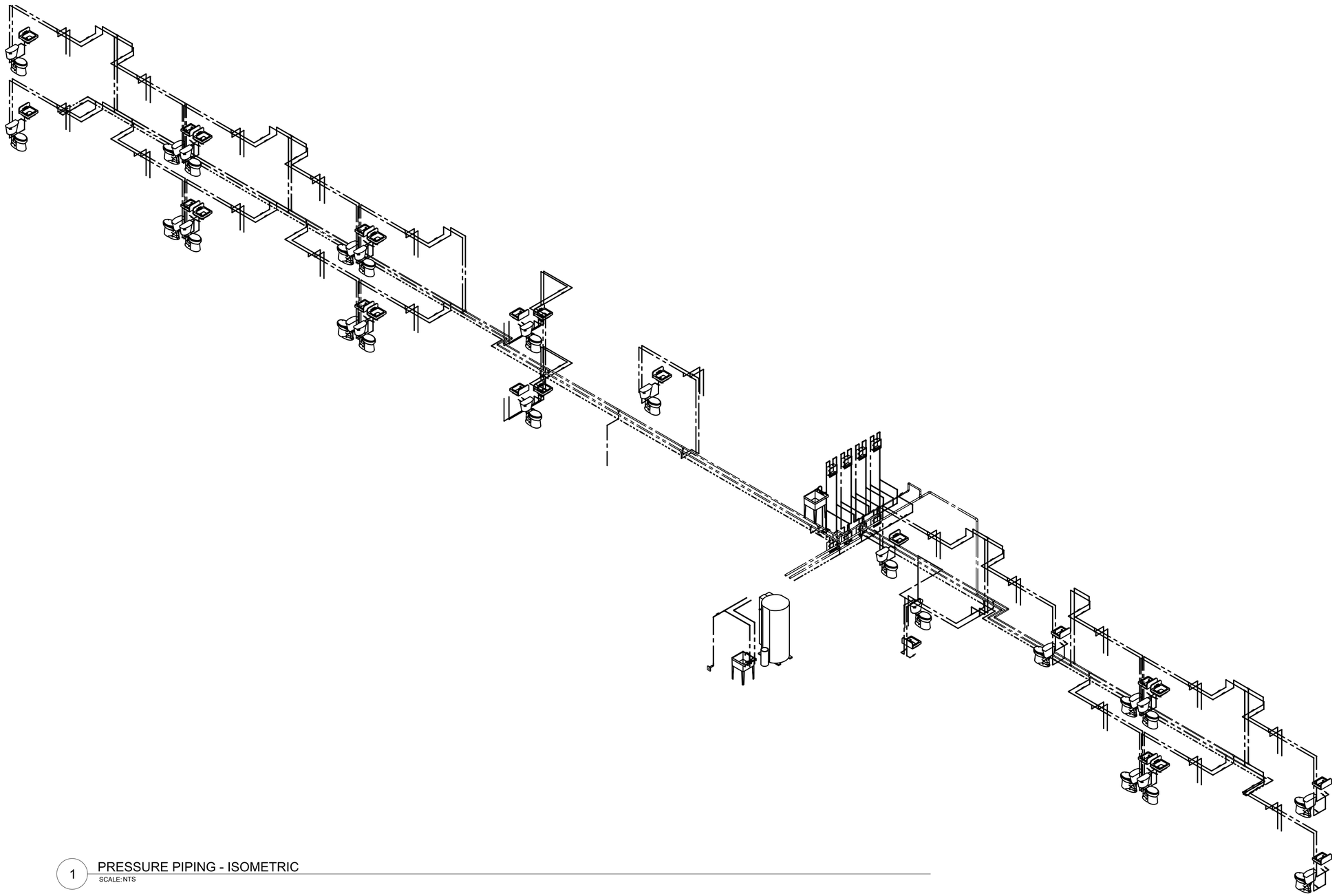

1 PRESSURE PIPING - ISOMETRIC
SCALE: NTS

CODE COMPLIANCE: THIS PROJECT HAS BEEN DESIGNED IN ACCORDANCE WITH THE PUERTO RICO EXISTING BUILDING CODE 2018 EDITION. CONTRACTORS ARE NOT ALLOWED TO MAKE CHANGES TO THIS PROJECT WITHOUT WRITTEN AUTHORIZATION OF THE ARCHITECT OF RECORD.

FJM Engineering, psc
Consulting Engineers
352 San Claudio St., STE 1, PMB 367, San Juan, PR 00926-4144
Tel: (787) 722-4641 / Cel: (787) 632-1494
E-mail: FMate@fjm-eng.com

FRANCISCO J. MATÉ INGENIERO LICENCIADO Lic. #13947 PUERTO RICO

Yo, Francisco J. Maté Cabrera, Lic. #13947, certifico que soy el profesional que diseñó estos planos y las especificaciones complementarias. Estos planos y especificaciones cumplen con las disposiciones aplicables del Reglamento Conjunto y las disposiciones del Reglamento para Obras de Construcción, Vigentes de las Agencias Concernientes a Nuestra Jurisdicción. Corporaciones Públicas con jurisdicción Certifico, además, que en la preparación de estos planos y especificaciones no se incurrió en conducta prohibida por lo dispuesto en la Ley Núm. 1 de 3 de enero de 2004, según enmendada, conocida como la "Ley para Prohibir Fraude y Apropiación Comercial y Actos Corruptos" y con la [Ley Núm. 319 de 15 de mayo de 1938, según enmendada, Ley Núm. 96 de 6 de julio de 1974, según enmendada, y demás aplicables]. Reconozco que cualquier declaración falsa o falsificación de los hechos que se haya producido por mí, mis agentes o empleados, o por otras personas con mi conocimiento, me hacen responsable de conducta impropia de disciplinaria por la OGPe.

CERTIFIED:

arquiteg
ARQUITECTOS
INGENIEROS
PLANIFICADORES

CONSTRUCTION AND FACILITIES MANAGEMENT OFFICE

PUERTO RICO ARMY NATIONAL GUARD
#552 BORINQUENEER TRAIL, FORT BUCHANAN, PUERTO RICO 00934

PROJECT:
RESTORATION REPAIR OF BUILDING 149, FATC I P/N: 432122
FORT ALLEN TRAINING CENTER, JUANA DIAZ, PUERTO RICO

NO.	DESCRIPTION	DATE
	REVISIONS	

100% BIDDING SET
NOT FOR CONSTRUCTION
BY: V.M.V. DATE: NOV 04, 2024

DESIGN:
VÍCTOR M. VILLEGAS, ANDRÉS M. VILLEGAS, GILBERTO A. MENDOZA, CARLA G. VILLARRUBIA, ELIAS VALDES, MARIELA SUÁREZ, JUAN CAMILO OSORIO

SUPERVISOR: VICTOR SANCHEZ, P.E.

SHEET NUMBER: P-08

SHEET TITLE: PRESSURE PIPING ISOMETRIC

SHEET: | TOTAL SHEETS: OF

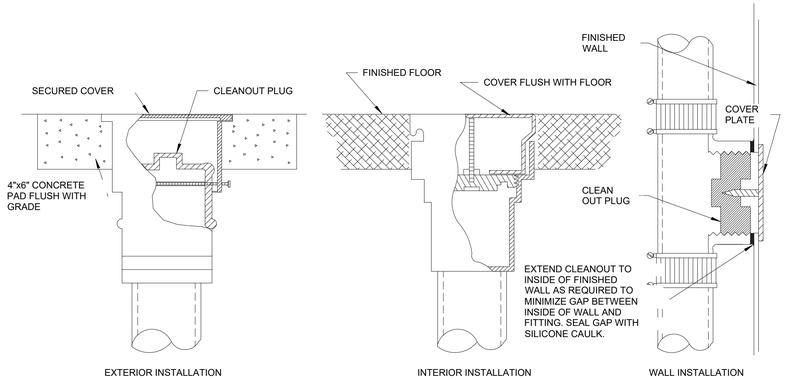

2 SANITARY CLEANOUTS DETAIL
SCALE: NTS

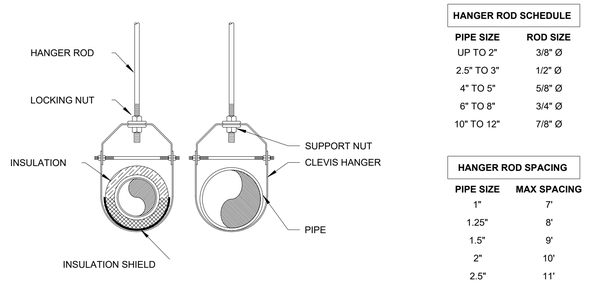

HANGER ROD SCHEDULE

PIPE SIZE	ROD SIZE
UP TO 2"	3/8" Ø
2.5" TO 3"	1/2" Ø
4" TO 5"	5/8" Ø
6" TO 8"	3/4" Ø
10" TO 12"	7/8" Ø

HANGER ROD SPACING

PIPE SIZE	MAX SPACING
1"	7'
1.25"	8'
1.5"	9'
2"	10'
2.5"	11'
3" TO 8"	12'
10" TO 12"	15'

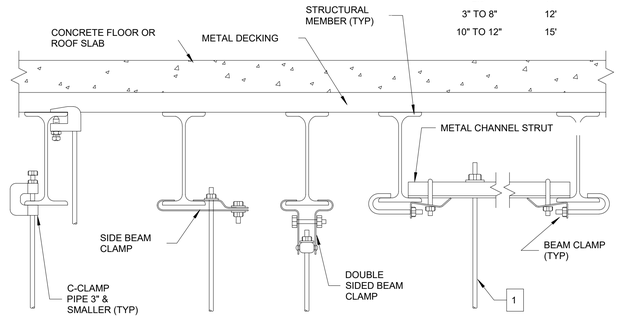

NOTES:
1. REFER TO HANGER ROD SCHEDULE FOR ROD SIZING.
ALWAYS REFER TO MANUFACTURERS INSTALLATION INSTRUCTIONS.

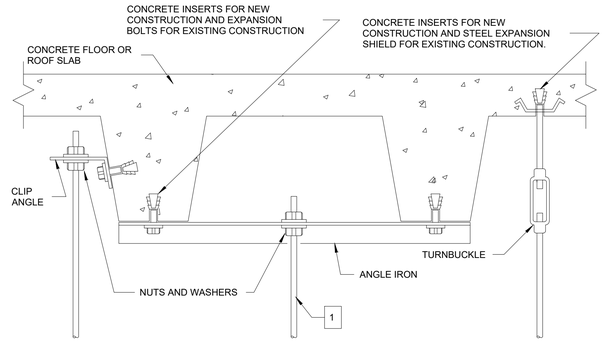

NOTES:
1. REFER TO HANGER ROD SCHEDULE FOR ROD SIZING.
2. FOR PIPES UNDER 2" USE 1-1/2"x1-1/2"x1-1/4" ANGLE IRON. FOR PIPES 2" AND LARGER USE 3"x3"x1/4" ANGLE IRON.
3. EXPANSION SHIELDS SHALL BE USED IN SLABS OR BEAMS OF 4" MIN. DEPTH.
ALWAYS REFER TO MANUFACTURERS INSTALLATION INSTRUCTIONS.

1 PIPE HANGER DETAIL
SCALE: NTS

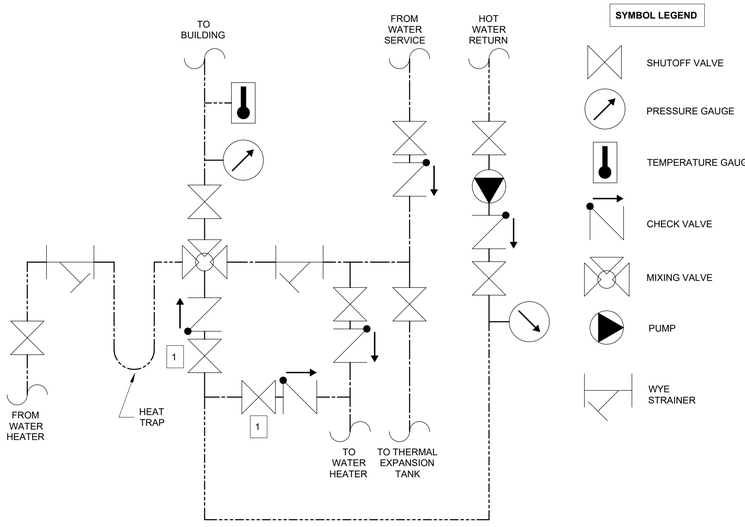

NOTES:
1. BALANCING VALVE TO BE ADJUSTED BY THE CONTRACTOR TO BALANCE HOT WATER CIRCULATION. FOLLOW MIXING VALVE MANUFACTURER INSTRUCTIONS.

4 THERMOSTATIC MIXING VALVE CONNECTION DETAIL
SCALE: NTS

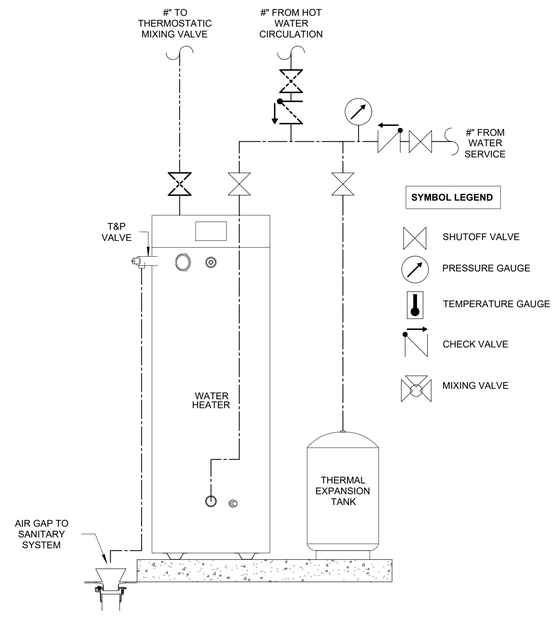

3 ELECTRIC HOT WATER HEATER DETAIL
SCALE: NTS

CODE COMPLIANCE: THIS PROJECT HAS BEEN DESIGNED IN ACCORDANCE WITH THE PUERTO RICO EXISTING BUILDING CODE 2018 EDITION. CONTRACTORS ARE NOT ALLOWED TO MAKE CHANGES TO THIS PROJECT WITHOUT WRITTEN AUTHORIZATION OF THE ARCHITECT OF RECORD.

FJM Engineering, psc
Consulting Engineers
352 San Claudio St., STE 1, PMB 367, San Juan, PR 00926-4144
Tel: (787) 722-4641 / Cel: (787) 632-1494
E-mail: FMate@fjm-eng.com

FRANCISCO J. MATE INGENIERO LICENCIADO LIC. #13947 PUERTO RICO

Yo, Francisco J. Mate Cabrera, Lic. #13947, certifico que soy el profesional que diseñó estos planos y las especificaciones complementarias. Estos planos y especificaciones cumplen con las disposiciones aplicables del Reglamento Conjunto y los Códigos de Construcción vigentes de las Corporaciones Públicas con jurisdicción Certifico, además, que en la preparación de estos planos y especificaciones complementarias he cumplido con lo dispuesto en la Ley Núm. 114 de 8 de enero de 2004, según enmendada, conocida como la "Ley para Garantizar el Pago de Salarios Justos" y con la (Ley Núm. 319 de 15 de mayo de 1938, según enmendada, Ley Núm. 96 de 6 de julio de 1988, según enmendada, conocida como la "Ley de Reconozco que cualquier declaración falsa o falsificación de los hechos que se haya producido en el diseño de estos planos por parte de mí, mis agentes o empleados, o por otras personas con mi conocimiento, me hacen responsable ante la Junta Examinadora de la disciplinaria por la OGPe.

CERTIFIED:

arquiteg
ARQUITECTOS
INGENIEROS
PLANIFICADORES

CONSTRUCTION AND FACILITIES MANAGEMENT OFFICE

PUERTO RICO ARMY NATIONAL GUARD
#552 BORINQUENEER TRAIL, FORT BUCHANAN, PUERTO RICO 00934

RESTORATION REPAIR OF BUILDING 149, FATC I P/N: 432122
FORT ALLEN TRAINING CENTER, JUANA DIAZ, PUERTO RICO

NO.	DESCRIPTION	DATE

REVISIONS

NO.	DESCRIPTION	DATE

PROJECT:

100% BIDDING SET
NOT FOR CONSTRUCTION
BY: V.M.V. DATE: NOV 04, 2024

DESIGN:
VÍCTOR M. VILLEGAS
ANDRÉS M. VILLEGAS
GILBERTO A. MENDOZA
CARLA G. VILLARRUBIA
ELIAS VALDES
MARIELA SUÁREZ
JUAN CAMILO OSORIO

SUPERVISOR: VICTOR SANCHEZ, P.E.

SHEET NUMBER: P-09

SHEET TITLE: PLUMBING DETAILS

SHEET: TOTAL SHEETS: OF

PLUMBING FIXTURE SCHEDULE

MARK	DESCRIPTION	CW	HW	TRAP	DRAIN	VENT	DESCRIPTION
EWC-1	WATER COOLER	1/2"	-	-	1"	-	WALL MOUNTED, OUTDOOR REFRIGERATED WATER COOLER. CONSTRUCTED OF 14 GA. STAINLESS STEEL WITH SELF-CLOSING, FRONT CONTROLS, VANDAL-RESISTANT BUBBLER, PROVIDING 8.0 GPH OF 50°F WATER AT 80°F INLET WATER AND 90°F AMBIENT TEMPERATURE.
LAV-1	LAVATORY	1/2"	1/2"	1-1/2"	2"	1-1/2"	WALL MOUNTED TYPE LAVATORY. FAUCET WITH 1.2 GPM MAXIMUM FLOW RATE AND INTEGRAL HOT LIMIT SAFETY STOP.
LAV-2	LAVATORY	1/2"	1/2"	1-1/2"	2"	1-1/2"	UNDER COUNTER TYPE LAVATORY. FAUCET WITH 1.2 GPM MAXIMUM FLOW RATE AND INTEGRAL HOT LIMIT SAFETY STOP.
JSK-1	SINK	1/2"	1/2"	1-1/2"	2"	1-1/2"	WALL MOUNTED SINK. SINK FAUCET WITH BUILT-IN SERVICE STOPS, INTEGRAL VACUUM BREAKER, AND 2.0 GPM MAX.
SH-1	SHOWER VALVE	1/2"	1/2"	-	-	-	PRESSURE-BALANCING BRASS VALVE BODY WITH INTEGRAL CHECKSTOPS ON VALVE INLETS. CERAMIC DISC VALVE CARTRIDGE WITH STAINLESS STEEL BALANCING PISTON, ADA-COMPLIANT LEVER HANDLES WITH ADJUSTABLE HOT TEMPERATURE LIMIT STOP. PROVIDE SHOWER WITH 1.5 GPM FLOW CONTROL
WC-1	WATER CLOSET	1/2"	-	INTEGRAL	3"	2"	FLOOR MOUNTED TANK TYPE, 1.6 GPF.
SK-1	SINK	1/2"	1/2"	1-1/2"	2"	1-1/2"	UNDER COUNTER TYPE SINK. FAUCET WITH 1.2 GPM MAXIMUM FLOW RATE AND INTEGRAL HOT LIMIT SAFETY STOP.
WB-1	WASHER UTILITY BOX	3/4"	3/4"	2"	2"	1-1/2"	ENCASED WASHING MACHINE VALVE COMPLETE WITH SINGLE LEVER HANDLE VALVE, HEAVY-DUTY MOUNTING STRAPS, KNOCKOUTS FOR A RIGHT OR LEFT MOUNTING, AND AN 1-1/2 X 2 TAILPIECE.

NOTE: SEE ARCHITECTURAL DRAWINGS FOR FIXTURE SPECIFICATIONS AND ADA REQUIREMENTS.

PUMP SCHEDULE

MARK	SERVICE	PUMP TYPE	GPM	TOTAL HEAD FT.	MAX PUMP RPM	MIN MOTOR HP	MOTOR VOLTAGE	NOTES
RP-1	HOT WATER RECIRC.	INLINE	5	19	3250	1/8	115/1/60	1-3

NOTES:
1. 150 PSI MAX. WORKING PRESSURE.
2. PERMANENT SPLIT CAPACITOR, IMPEDANCE PROTECTED MOTOR. FURNISH TWIN PUMP PRE-FABRICATED VARIABLE SPEED PUMPING PACKAGE. PACKAGE TO BE A STANDARD PRODUCT OF SINGLE PUMP MANUFACTURER COMPLETE WITH PUMPS, MOTORS,
3. SELF LUBRICATING.

ELECTRIC WATER HEATER SCHEDULE

MARK	TYPE	INPUT KW	TEMP RISE (°F)	RECOVERY RATE (GPH)	ELECTRICAL		NOTES
					AMPS	VOLTAGE	
EWH-1	250 GAL TANK	18	100	74	52	208/3/60	-

PLUMBING EQUIPMENT SCHEDULE

MARK	COMPONENT	DESCRIPTION
MV-1	THERMOSTATIC MIXING VALVE	THERMOSTATIC MIXING VALVE MEETING ASSE 1017 STANDARD. 48 GPM @ 15 PSI PRESSURE DROP SET TO 110°. MINIMUM FLOW 1.0 GPM
HB-1	HOSE BIBB	3/4" ANTI-SIPHON BRASS HOSE BIBB WITH VACUUM BREAKER, AND 3/4" HOSE THREAD OUTLET
FD-1	FLOOR DRAIN	COATED CAST IRON WITH BOTTOM OUTLET, POLISHED 6" DIA. NICKEL BRONZE STRAINER, FLASHING CLAMP, & 1/2" TRAP PRIMER
FCO	FLOOR CLEANOUT	CAST IRON FLOOR CLEANOUT GAS AND WATERTIGHT ABS TAPERED THREAD PLUG AND ADJUSTABLE ROUND SCORIATED COATED CAST IORN HEAVY-DUTY TOP.
WCO	WALL CLEANOUT	CAST IRON BODY, GAS AND WATERTIGHT ABS TAPERED THREAD PLUG, AND ROUND, SMOOTH STAINLESS STEEL ACCESS COVER WITH SECURING SCREW
EX-1	EXPANSION TANK	10 GALLON, 150 PSIG WORKING PRESSURE ASME EXPANSION TANK, 200°F MAXIMUM OPERATING TEMP. WITH HEAVY DUTY BUTYL DIAPHRAGM, POLYPROPYLENE LINES, STEEL SHELL, AND RED OXIDE PRIMER FINISH
LI-1	LINT INTERCEPTOR	ACID RESISTANT COATED INTERIOR AND EXTERIOR FABRICATED STEEL LINT INTERCEPTOR, NON-SKID SECURED COVER WITH REMOVABLE LIFT HANDLE, ALUMINUM LINT INTERCEPTING SECONDARY SCREEN ASSEMBLY, AND PERMANENT PRIMARY STRAINING BAFFLE.
HUB-1	HUB DRAIN	LACQUERED CAST IRON HUB DRAIN WITH ANCHOR FLANGE, WEEP HOLES, AND (SPECIFY STRAINER FINISH) INDIRECT WASTE HUB.

CODE COMPLIANCE: THIS PROJECT HAS BEEN DESIGNED IN ACCORDANCE WITH THE PUERTO RICO EXISTING BUILDING CODE 2018 EDITION. CONTRACTORS ARE NOT ALLOWED TO MAKE CHANGES TO THIS PROJECT WITHOUT WRITTEN AUTHORIZATION OF THE ARCHITECT OF RECORD.

FJM Engineering, psc
Consulting Engineers
352 San Claudio St., STE 1, PMB 367, San Juan, PR 00926-4144
Tel: (787) 722-4641 / Cel: (787) 632-1494
E-mail: FMate@fjm-eng.com

FRANCISCO J. MATE INGENIERO LICENCIADO LIC. #13947 PUERTO RICO

Yo, Francisco J. Mate Cabrera, Lic. #13947, certifico que soy el profesional que diseñó estos planos y las especificaciones complementarias. Hemos diseñado estos planos y especificaciones para cumplir con las disposiciones aplicables del Reglamento para Obras de Construcción y Uso de Edificios, Instalaciones y Corporaciones Públicas con jurisdicción Certifico, además, que en la preparación de estos planos y especificaciones se ha cumplido con lo dispuesto en la Ley Núm. 1 de 8 de enero de 2004, según enmendada, conocida como la "Ley para Fomentar la Seguridad, Salud y Bienestar con la [Ley Núm. 319 de 15 de mayo de 1938, según enmendada, Ley Núm. 96 de 6 de julio de 1956, según enmendada]. Reconozco que cualquier declaración falsa o falsificación de los hechos que se haya producido en el diseño aquí reflejado, ya sea por mí, mis agentes o empleados, o por otras personas con mi conocimiento, me hacen responsable ante la disciplinaria por la OGPe.

CERTIFIED:

arquiteg
ARQUITECTOS
INGENIEROS
PLANIFICADORES

CONSTRUCTION AND FACILITIES MANAGEMENT OFFICE

PUERTO RICO ARMY NATIONAL GUARD
#552 BORINQUEN TRAIL, FORT BUCHANAN, PUERTO RICO 00934

PROJECT:
RESTORATION REPAIR OF BUILDING 149, FATC I P/N: 432122
FORT ALLEN TRAINING CENTER, JUANA DIAZ, PUERTO RICO

NO.	DESCRIPTION	DATE

NO.	DESCRIPTION	DATE

100% BIDDING SET
NOT FOR CONSTRUCTION
BY: V.M.V. DATE: NOV 04, 2024

DESIGN:
VÍCTOR M. VILLEGAS, ANDRÉS M. VILLEGAS, GILBERTO A. MENDOZA, CARLA G. VILLARRUBIA, ELIAS VALDES, MARIELA SUÁREZ, JUAN CAMILO OSORIO

SUPERVISOR: VICTOR SANCHEZ, P.E.

SHEET NUMBER: P-10

SHEET TITLE: PLUMBING SCHEDULES

SHEET: TOTAL SHEETS: OF

FIRE PROTECTION NOTES

1. ALL FIRE SPRINKLER WORKS SHALL BE INSTALLED BY A CERTIFIED FIRE SPRINKLER CONTRACTOR.
2. ALL WORKMANSHIP AND MATERIALS SHALL BE IN STRICT ACCORDANCE WITH NFPA-13R AND NFPA-24, AND THE APPLICABLE LOCAL CODES, RULES, AND ORDINANCES.
3. SPRINKLER SYSTEM LAYOUT DOCUMENTS SHALL BE SUBMITTED TO THE ENGINEER OF RECORD FOR APPROVAL PRIOR TO CONSTRUCTION. THEY SHALL INCLUDE, BUT NOT BE LIMITED TO, THE FLOW TEST DATA, BACKFLOW AND FLOW SWITCHES, RISER ASSEMBLY, DRAIN AND TEST ASSEMBLY, HEAD LOCATIONS, CUT LENGTHS, AND HYDRAULIC CALCULATION.
4. THE SPRINKLER CONTRACTOR SHALL CONSIDER THE PROJECT AS ONE SET OF DOCUMENTS. THE GENERAL CONTRACTOR SHALL PROVIDE THE SPRINKLER CONTRACTOR A COMPLETE SET OF DOCUMENTS, INCLUDING ALL TRADES, PRIOR TO BIDDING AND CONSTRUCTION. THE SPRINKLER CONTRACTOR SHALL COORDINATE WITH ALL OTHER CONTRACTORS AS REQUIRED AND WILL INFORM THE ARCHITECT/ENGINEER OF ANY DISCREPANCIES OR POSSIBLE CONFLICTS ON THE DOCUMENTS PRIOR TO SUBMITTING FINAL BID AND COMMENCING ANY WORK. THE SPRINKLER CONTRACTOR SHALL MAKE HIMSELF AVAILABLE FOR REVIEWING DOCUMENTS WITH ARCHITECT/ENGINEER UPON REQUEST.
5. THE FIRE SPRINKLER CONTRACTOR SHALL BE HELD TO HAVE VERIFIED ALL EXISTING CONDITIONS, INCLUDING SITE VISITATION, AND REVIEW OF AS BUILT DOCUMENTATION, AS APPLICABLE, PRIOR TO BIDDING, ORDERING, FABRICATION, OR INSTALLATION OF ANY MATERIALS OR EQUIPMENT ON THIS PROJECT.
6. REQUIRED INSURANCE SHALL BE PROVIDED BY THE FIRE SPRINKLER CONTRACTOR FOR PROTECTION AGAINST PUBLIC LIABILITY AND PROPERTY DAMAGE FOR THE DURATION OF THE WORK.
7. THE FIRE SPRINKLER CONTRACTOR SHALL SECURE AND PAY FOR ALL PERMITS, FEES, INSPECTIONS, AND TESTS. THE FIRE SPRINKLER CONTRACTOR SHALL OBTAIN PERMIT AND APPROVED SUBMITTALS PRIOR TO BEGINNING WORK OR ORDERING EQUIPMENT. FIRE SPRINKLER CONTRACTOR MUST BE PRESENT FOR ALL INSPECTIONS OF HIS WORK BY REGULATORY AUTHORITIES.
8. DRAWINGS ARE DIAGRAMMATIC IN NATURE AND ARE TO BE READ IN CONJUNCTION WITH ARCHITECTURAL, MECHANICAL, ELECTRICAL, PLUMBING, AND STRUCTURAL DRAWINGS, AND ARE CONSIDERED TO BE ONE SET OF DOCUMENTS. DO NOT SCALE FOR THE EXACT LOCATION OF FIXTURES, PIPING, EQUIPMENT, ETC.
9. THE FIRE SPRINKLER CONTRACTOR SHALL SUBMIT FOR APPROVAL A DIGITAL COPY OF THE MANUFACTURER'S DRAWINGS FOR EACH PIECE OF EQUIPMENT INCLUDED IN THE CONTRACT. ALL MATERIAL SHALL BE NEW, OF U.S. MANUFACTURER OF GOOD QUALITY. ALL WORK SHALL BE PERFORMED IN A WORKMANLIKE MANNER BY SKILLED TRADESMEN.
10. AS APPLICABLE, THE CONTRACTOR IS RESPONSIBLE FOR MAINTAINING AND SUPPORTING FUNCTIONALITY OF FIRE SPRINKLER SYSTEMS IN UN-REMODELED AREAS DURING CONSTRUCTION AND INSTALLATION.

SPRINKLER LAYOUT DOCUMENTS

1. THE CONTRACTOR SHALL PROVIDE SYSTEM LAYOUT DOCUMENTS FOR A WET PIPE FIRE PROTECTION SYSTEM CONSISTENT WITH THE REQUIREMENTS OF NFPA 13R.
2. THE DOCUMENTS SHALL INCLUDE HEAD LAYOUTS, PIPE CUT LENGTHS, HYDRAULIC CALCULATION, CATALOG INFORMATION ON STANDARD PRODUCTS, AND OTHER CONSTRUCTION DATA THAT PROVIDES DETAIL ON THE LOCATION OF RISERS, CROSS MAINS, BRANCH LINES, SPRINKLER HEADS, SIZING OF PIPE, AND HANGER LOCATIONS, AND ALSO SERVES AS A GUIDE FOR FABRICATION AND INSTALLATION OF A FIRE PROTECTION SYSTEM.
3. THE HYDRAULIC CALCULATIONS SHALL BE COMPUTER GENERATED USING AN APPROVED SOFTWARE AND SHALL INCLUDE A SUMMARY SHEET, GRAPH SHEET, A WATER SUPPLY ANALYSIS, A NODE ANALYSIS, AND DETAILED WORK SHEETS CONSISTENT WITH THE REQUIREMENTS OF NFPA 13 SECTION 23.3.5.
4. IT IS THE RESPONSIBILITY OF THE SPRINKLER CONTRACTOR TO COORDINATE THE LOCATIONS OF SPRINKLER HEADS WITH REGARD TO ARCHITECTURAL FEATURES AND OTHER SIMILAR OBSTRUCTIONS.

SCOPE OF WORK

1. THE FIRE SPRINKLER SCOPE OF WORK FOR THIS PROJECT CONSISTS OF INSTALLING A NEW WET PIPE FIRE PROTECTION SYSTEM AS INSTRUCTED IN THE CONSTRUCTION DOCUMENTS.
2. TOTAL SQUARE FOOTAGE OF PROJECT IS APPROXIMATELY 10,600 SQUARE FEET.

ACCEPTANCE TEST CRITERION

1. THE SYSTEM SHALL BE TESTED IN ACCORDANCE WITH THE REQUIREMENTS OF NFPA-13R AND NFPA-24, AS APPLICABLE. THE CONTRACTOR SHALL NOTIFY THE AUTHORITY HAVING JURISDICTION AND THE OWNER (OR OWNER REPRESENTATIVE) OF THE TIME AND DATE TESTING WILL BE PERFORMED AT LEAST 48 HOURS IN ADVANCE.
2. THE INSTALLING CONTRACTOR SHALL COMPLETE THE REQUIRED ACCEPTANCE TEST. THE FOLLOWING CERTIFICATES SHALL BE COMPLETED WITH ALL APPLICABLE TEST RESULTS:
   - 2.1. NFPA 13 FIGURE 10.10.1 "CONTRACTOR'S MATERIAL AND TEST CERTIFICATE FOR UNDERGROUND PIPING".
   - 2.2. NFPA 13R FIGURE 10.1.2 "CONTRACTOR'S MATERIAL AND TEST CERTIFICATE FOR ABOVEGROUND PIPING".
3. SEE NFPA 13R CHAPTER 10 SYSTEM ACCEPTANCE FOR DETAILS ON APPLICABLE ITEMS.
4. THE COMPLETED SYSTEM SHALL BE HYDROSTATICALLY TESTED TO 200PSIG FOR 2 HOURS WITH NO VISIBLE LOSS OF PRESSURE. THE PRESSURE SHALL BE MEASURED T THE LOWEST PLACE IN THE BUILDING SYSTEM.
5. WATER FLOW DETECTING DEVICES, INCLUDING THE ASSOCIATED ALARM CIRCUITS SHALL BE FLOW TESTED THROUGH THE INSPECTOR'S TEST CONNECTION AND SHALL RESULT IN AN AUDIBLE ALARM ON THE PREMISES WITHIN 5 MINUTES AFTER SUCH FLOW BEGINS AND UNTIL SUCH FLOW STOPS.

STRUCTURAL SUPPORT AND OPENINGS

1. THE STRUCTURE OF THE BUILDING SHALL INCLUDE THE WEIGHT OF THE SPRINKLER SYSTEM. THIS SHALL INCLUDE A DEAD LOAD OF 5 LBS/SF AND A LIVE LOAD OF 250 LBS AT THE POINT OF HANGING AS PER NFPA 13 SECTION 9.2.1.3.1. THE DESIGN OF THE REINFORCEMENT SHALL BE PREPARED BY A STRUCTURAL ENGINEER. THE REINFORCEMENT, IF REQUIRED, SHALL BE SHOWN ON THE STRUCTURAL CONSTRUCTION DOCUMENTS. THE STRUCTURAL DOCUMENTS, ALONG WITH THE FIRE SPRINKLER SHOP DRAWINGS, SHALL BE SUBMITTED TO THE MECHANICAL ENGINEER FOR REVIEW PRIOR TO INSTALLATION. CONTRACTOR SHALL COORDINATE WITH STRUCTURAL ENGINEER.
2. SEISMIC BRACING TO BE UTILIZED AS NEEDED.

WATER SUPPLIES

1. EVERY AUTOMATIC SPRINKLER SYSTEM SHALL HAVE AT LEAST ONE AUTOMATIC WATER SUPPLY.
2. WATER SUPPLIES SHALL BE CAPABLE OF PROVIDING THE REQUIRED FLOW AND PRESSURE FOR ALL DESIGN AREAS USING THE REQUIREMENTS OF NFPA 13R CHAPTER 7 AND THE HYDRAULIC PROCEDURES LOCATED IN NFPA 13.
3. THE WATER SUPPLY SHALL BE CAPABLE OF SUPPLYING THE SYSTEM DEMAND FOR AT LEAST 30 MINUTES.
4. WATER SUPPLIES FOR SPRINKLER SYSTEMS SHALL BE ONE OF THE FOLLOWING OR ANY COMBINATION THEREOF:
   - 4.1. A CONNECTION TO AN RELIABLE WATERWORKS SYSTEM WITH OR WITHOUT A PUMP, AS REQUIRED.
   - 4.2. AN ELEVATED TANK.
   - 4.3. A PRESSURE TANK IN ACCORDANCE WITH NFPA 13 AND NFPA 22.
   - 4.4. A STORED WATER SOURCE WITH AN AUTOMATICALLY OPERATED FIRE PUMP.

ADDITIONAL INFORMATION

1. POINT OF SERVICE - REFERENCE SHEET FP-02.
2. APPLICABLE NFPA CODES AND STANDARDS - REFERENCE THIS SHEET, APPLICABLE FIRE PROTECTION CODES BLOCK.
3. CLASSIFICATION OF HAZARD OCCUPANCY FOR EACH ROOM OR AREA - REFERENCE SHEETS FP-02 OCCUPANCY CLASSIFICATIONS BLOCK.
4. VALVING AND ALARM REQUIREMENTS -
   - 4.1. A LOCAL WATERFLOW ALARM SHALL BE PROVIDED ON ALL SPRINKLER SYSTEMS.
   - 4.2. WATERFLOW ALARMS SHALL BE INSTALLED PER NFPA 13.
5. BACKFLOW PREVENTION - MEANS SHALL BE PROVIDED DOWNSTREAM OF ALL BACKFLOW PREVENTION VALVES FOR FORWARD FLOW TESTS AT A MINIMUM FLOW RATE OF THE SYSTEM DEMAND.
6. QUALITY AND PERFORMANCE SPECIFICATIONS OF INTERIOR FIRE PROTECTION COMPONENTS - ALL INTERIOR FIRE PROTECTION EQUIPMENT SHALL CONFORM TO NFPA -13R. ALL INTERIOR FIRE PROTECTION EQUIPMENT SHALL BE UL OR FM LISTED.
7. OWNER'S CERTIFICATE OF INFORMATION - TO BE PROVIDED BY THE OWNER IF REQUIRED BY THE AHJ.
8. THE NUMBER OF SPRINKLERS IN THE DESIGN AREA SHALL BE ALL OF THE SPRINKLERS WITHIN A COMPARTMENT, UP TO A MAXIMUM OF FOUR SPRINKLERS, THAT REQUIRE THE GREATEST HYDRAULIC DEMAND.
9. WATER SUPPLY CALCULATIONS:
   SYSTEM DEMAND = 4 SPRINKLERS X 13 GPM PER SPRINKLER = 52 GPM
   WATER SUPPLY = DEMAND X 30 MIN = 52 GPM X 30 MIN = 1,560 GAL.

APPLICABLE FIRE PROTECTION CODES

1. THIS LIST IS NOT INCLUSIVE OF ALL CODES AND STANDARDS THAT MAY OR MAY NOT APPLY TO THIS PROJECT.

2. PERFORM WORK SPECIFIED IN SPECIFICATIONS IN ACCORDANCE WITH STANDARDS LISTED BELOW INCLUDING AMENDMENTS OR REVISIONS. WHEN THESE SPECIFICATIONS ARE MORE STRINGENT, THEY TAKE PRECEDENCE. IN CASE OF CONFLICT, OBTAIN A DECISION FROM THE DESIGNER.

PUERTO RICO BUILDING CODE (2018)

PUERTO RICO FIRE CODE (2018)

NFPA 13R - STANDARD FOR THE INSTALLATION OF SPRINKLER SYSTEMS IN LOW-RISE RESIDENTIAL OCCUPANCIES (2016)

NFPA 13 - STANDARD FOR THE INSTALLATION OF SPRINKLER SYSTEMS (2016)

NATIONAL GUARD PAMPHLET (NG PAM) 415-5, ARMY NATIONAL GUARD MILITARY CONSTRUCTION PROGRAM EXECUTION, 31 JULY 2003 OR CURRENT EDITION

NGR 415-10, CHAPTER 5, ARMY NATIONAL GUARD FACILITIES CONSTRUCTION, 25 JULY 2003 OR CURRENT EDITION

NG PAM 415-12, ARMY NATIONAL GUARD FACILITIES ALLOWANCES, 01 JUNE 2011

DG 415-5, ARMY NATIONAL GUARD GENERAL FACILITIES INFORMATION DESIGN, 01 JUNE 2011

UNITED FACILITIES CRITERIA (UFC) 4-720-01 LODGING FACILITIES

UFC 1-200-01 DOD BUILDING CODE

FIRE PROTECTION SHEET INDEX

SHEET NUMBER	SHEET NAME
FP-00	FIRE PROTECTION NOTES & LEGEND
FP-01	FIRE PROTECTION SPECIFICATIONS
FP-02	FIRE PROTECTION PLAN - FIRST FLOOR & SECOND FLOOR
FP-03	FIRE PROTECTION DETAILS

FIRE PROTECTION LEGEND

———	NEW PIPE
◉	CONCEALED PENDENT SPRINKLER
○	UPRIGHT SPRINKLER
▼	CONCEALED SIDEWALL SPRINKLER

PUMP SCHEDULE

MARK	SERVICE	FLOW (GPM)	HEAD (PSI)	AMPS	HP	V/PH/HZ	NOTES
FP-1	SPRINKLER SYSTEM	60	40	34.6	7.5	208/1/60	1, 2, 3

NOTES:
1. UL VERTICAL INLINE PUMP
2. PROVIDE NEMA 4X CONTROL PANEL FOR OUTDOOR INSTALLATION.
3. PROVIDE JOCKEY PUMP RATED FOR 6 GPM AT 50 PSI.

CODE COMPLIANCE: THIS PROJECT HAS BEEN DESIGNED IN ACCORDANCE WITH THE PUERTO RICO EXISTING BUILDING CODE 2018 EDITION. CONTRACTORS ARE NOT ALLOWED TO MAKE CHANGES TO THIS PROJECT WITHOUT WRITTEN AUTHORIZATION OF THE ARCHITECT OF RECORD.

FJM Engineering, psc
Consulting Engineers
352 San Claudio St., STE 1, PMB 367, San Juan, PR 00926-4144
Tel: (787) 722-4641 / Cel: (787) 632-1494
E-mail: FMato@fjm-eng.com

FRANCISCO J. MATE INGENIERO LICENCIADO LIC. #13947 PUERTO RICO

Yo, Francisco J. Mate Cabrera, Lic. #13947, certifico que soy el profesional que diseñó estos planos y las especificaciones complementarios. Estos planos y especificaciones cumplen con las disposiciones aplicables del Reglamento Conjunto y las disposiciones del Reglamento de Permisos y Códigos de Construcción Vigentes de las Corporaciones Públicas con jurisdicción Científico, además, que en la preparación de estos planos y especificaciones no he violado ninguna ley sobre ello dispuesto en la Ley Núm. 1 de 6 de enero de 2004, según enmendada, conocida como la "Ley de Ética Gubernamental de Puerto Rico de 2011" y con la (Ley Núm. 319 de 15 de mayo de 1938, según enmendada, Ley Núm. 96 de 6 de julio de 1978, según enmendada). Reconozco que cualquier declaración falsa o falsificación de los hechos que se haya producido en el diseño de estos documentos podría dar lugar a mí, mis agentes o empleados, o por otras personas con mi conocimiento, me hacen responsable de acciones disciplinarias por la disciplinaria por la OGPe.

CERTIFIED:

arquiteg
ARQUITECTOS
INGENIEROS
PLANIFICADORES

CONSTRUCTION AND FACILITIES MANAGEMENT OFFICE

PUERTO RICO ARMY NATIONAL GUARD
#552 BORINQUEN TRAIL, FORT BUCHANAN, PUERTO RICO 00934

PROJECT:
RESTORATION REPAIR OF BUILDING 149, FATC I P/N: 432122
FORT ALLEN TRAINING CENTER, JUANA DIAZ, PUERTO RICO

NO.	DESCRIPTION	DATE
	REVISIONS	

100% BIDDING SET
NOT FOR CONSTRUCTION
BY: V.M.V. DATE: NOV 04, 2024

DESIGN:
VICTOR M. VILLEGAS, ANDRÉS M. VILLEGAS, GILBERTO A. MENDOZA, CARLA G. VILLARRUBIA, ELIAS VALDES, MARIELA SUÁREZ, JUAN CAMILO OSORIO

SUPERVISOR: VICTOR SANCHEZ, P.E.

SHEET NUMBER: FP-00

SHEET TITLE: FIRE PROTECTION NOTES & LEGEND

SHEET: TOTAL SHEETS: OF

FIRE PROTECTION SPECIFICATIONS

A. SELECT REFERENCES DEFINITIONS

ANSI - AMERICAN NATIONAL STANDARDS INSTITUTE INTERNATIONAL

ASSE - AMERICAN SOCIETY OF SANITARY ENGINEERING

ASME - AMERICAN SOCIETY OF MECHANICAL ENGINEERS INTERNATIONAL

ASTM - AMERICAN SOCIETY FOR TESTING AND MATERIALS INTERNATIONAL

AWWA - AMERICAN WATER WORKS ASSOCIATION

EPA - U.S. ENVIRONMENTAL PROTECTION AGENCY

FM - FACTORY MUTUAL

NFPA - NATIONAL FIRE PROTECTION ASSOCIATION

UL - UNDERWRITERS LABORATORIES

B. QUALITY ASSURANCE AND DELEGATED DESIGN

1. INSTALLER'S RESPONSIBILITIES INCLUDE DESIGNING, FABRICATING, AND INSTALLING SPRINKLER SYSTEMS AND PROVIDING PROFESSIONAL ENGINEERING SERVICES NEEDED TO ASSUME ENGINEERING RESPONSIBILITY. BASE CALCULATIONS ON RESULTS OF FIRE-HYDRANT FLOW TEST WITH CORRECTIONS TO THE FLOW OBTAINED PER NFPA 291 PART 4.12 SYSTEM CORRECTION.

2. ENGINEERING RESPONSIBILITY: PREPARATION OF WORKING PLANS, CALCULATIONS, AND FIELD TEST REPORTS BY A QUALIFIED ENGINEER WITH NICET LEVEL 3 CERTIFICATION. OBTAINING AND/OR PERFORMING A FIRE HYDRANT FLOW TEST, TO OBTAIN THE DATA TO BE UTILIZED FOR THE HYDRAULIC CALCULATIONS..

3. WELDING QUALIFICATIONS: QUALIFY PROCEDURES AND OPERATORS ACCORDING TO ASME BOILER AND PRESSURE VESSEL CODE.

4. ELECTRICAL COMPONENTS, DEVICES, AND ACCESSORIES: LISTED AND LABELED AS DEFINED IN NFPA 70, BY A QUALIFIED TESTING AGENCY, AND MARKED FOR INTENDED LOCATION AND APPLICATION.

C. SUBMITTALS

1. DELEGATED-DESIGN SUBMITTAL: FOR SPRINKLER SYSTEMS INDICATED TO COMPLY WITH PERFORMANCE REQUIREMENTS AND DESIGN CRITERIA, INCLUDING ANALYSIS DATA SIGNED BY THE QUALIFIED ENGINEER RESPONSIBLE FOR THEIR PREPARATION.

2. QUALIFICATION DATA: FOR QUALIFIED INSTALLER AND ENGINEER WITH NICET LEVEL 3 CERTIFICATION

3. PRODUCT DATA: FOR EACH TYPE OF PRODUCT INDICATED.

4. SHOP DRAWINGS: FOR WET-PIPE AND DRY PIPE SPRINKLER SYSTEMS, INCLUDE PLANS, ELEVATIONS, SECTIONS, DETAILS, AND ATTACHMENTS TO OTHER WORK.

6. APPROVED SPRINKLER PIPING DRAWINGS: WORKING PLANS, PREPARED ACCORDING TO NFPA 13R, THAT HAVE BEEN APPROVED BY AUTHORITIES HAVING JURISDICTION, INCLUDING HYDRAULIC CALCULATIONS.

7. FIELD TEST REPORTS AND CERTIFICATES: INDICATE AND INTERPRET TEST RESULTS FOR COMPLIANCE WITH PERFORMANCE REQUIREMENTS AND AS DESCRIBED IN NFPA 13. INCLUDE "CONTRACTOR'S MATERIAL AND TEST CERTIFICATE FOR ABOVEGROUND PIPING."

8. TEST REPORTS - PRESSURE TESTS, FLUSHING AND DISINFECTION, TEST OF BACKFLOW PREVENTION ASSEMBLIES.

9. OPERATION AND MAINTENANCE DATA - INSTALLATION, OPERATION AND MAINTENANCE MANUALS OF ALL SPECIFIED EQUIPMENT, PRODUCTS, PIPING, AND PIPING ACCESSORIES. FURNISH 2 BOOKS AND 2 CD'S OF BOOK.

D. PIPE AND FITTINGS

1. UNDERGROUND PIPE WITHIN 5 FEET OF BUILDING - DUCTILE IRON WATER PIPE

   a. PROVIDE MECHANICAL-JOINT DUCTILE-IRON WATER PIPE, CENTRIFUGALLY CAST, UL LISTED AND LABELED, CONFORMING TO APPLICABLE PROVISIONS OF AWWA C111/A21.11, AND AWWA C151/A21.51. WALL-THICKNESS CRITERIA IS 200 PSI WORKING PRESSURE PLUS 100 PSI SURGE ALLOWANCE,

2. ABOVE GROUND PIPE - TYPE BCS - BLACK CARBON STEEL - WET PIPE

   a. PIPE THROUGH 2 INCHES: SCHEDULE 40 BLACK-CARBON STEEL CONFORMING TO ASTM A53, OR ASTM A135, TYPE E (ELECTRIC-RESISTANCE WELDED), GRADE B, OR TYPE S (SEAMLESS), GRADE B;

   b. PIPE 2-1/2 THROUGH 8 INCHES: SCHEDULE 10 BLACK CARBON STEEL, CONFORMING TO ASTM A53 OR ASTM A135, TYPE E (ELECTRIC-RESISTANCE WELDED), GRADE B, OR TYPE S (SEAMLESS), GRADE B;

   c. FITTINGS 2 INCHES AND UNDER: 175-PSIG WORKING PRESSURE, CAST IRON, SCREWED, CONFORMING TO ASTM A126, CLASS A, AND ASME B16.4.

   d. FITTINGS 2-1/2 INCHES AND LARGER; PROVIDE ROLLED-GROOVE COUPLINGS. PROVIDE ROLLED ONLY GROOVES FOR ROLLED-GROOVE TYPE; CUT GROOVING IS NOT ALLOWED. ENSURE ROLLED GROOVES ARE DIMENSIONALLY COMPATIBLE WITH THE COUPLINGS. HOUSING FABRICATED IN TWO OR MORE PARTS OF BLACK MALLEABLE-IRON CASTINGS. PROVIDE COUPLING GASKET MOLDED OF SYNTHETIC RUBBER, CONFORMING TO REQUIREMENTS OF ASTM D2000. PROVIDE COUPLING BOLTS THAT ARE OVAL-NECK, TRACK-HEAD TYPE WITH HEAVY HEXAGONAL NUTS, CONFORMING TO ASTM A183.

   e. UNIONS 2 INCHES AND UNDER: 300-PSIG WORKING PRESSURE FEMALE, SCREWED, MALLEABLE IRON, WITH BRASS-TO-SEAT AND GROUND JOINT

E. LISTED FIRE-PROTECTION VALVES

1. GENERAL REQUIREMENTS - VALVES SHALL BE UL LISTED OR FM APPROVED. MINIMUM PRESSURE RATING: 175 PSIG.

2. CHECK VALVES - STANDARD: UL 312.2. PRESSURE RATING: 250 PSIG MINIMUM. TYPE: SWING CHECK. BODY MATERIAL: CAST IRON. END CONNECTIONS: FLANGED OR GROOVED.

3. BRONZE OS&Y GATE VALVES - STANDARD: UL 262. PRESSURE RATING: 175 PSIG. BODY MATERIAL: BRONZE. END CONNECTIONS: THREADED.

4. IRON OS&Y GATE VALVES - STANDARD: UL 262. PRESSURE RATING: 250 PSIG MINIMUM. BODY MATERIAL: CAST OR DUCTILE IRON. END CONNECTIONS: FLANGED OR GROOVED.

5. BALL VALVES 2" AND SMALLER - STANDARD UL 1091. PRESSURE RATING: 175 PSIG MINIMUM. BODY MATERIAL: BRONZE. END CONNECTIONS: THREADED.

6. INDICATING-TYPE BUTTERFLY VALVES - STANDARD: UL 1091. PRESSURE RATING: 175 PSIG MINIMUM. VALVE TYPE: BUTTERFLY. BODY MATERIAL: CAST OR DUCTILE IRON.END CONNECTIONS: FLANGED, GROOVED, OR WAFER. VALVE OPERATION: INTEGRAL ELECTRICAL, 115-V AC, PREWIRED, SINGLE-CIRCUIT, SUPERVISORY SWITCH INDICATING DEVICE.

7. TRIM AND DRAIN VALVES - STANDARD: UL'S "FIRE PROTECTION EQUIPMENT DIRECTORY" LISTING OR "APPROVAL GUIDE," PUBLISHED BY FM GLOBAL, LISTING. MINIMUM PRESSURE RATING: 175 PSIG.

8. AUTOMATIC (BALL DRIP) DRAIN VALVES - STANDARD: UL 1726. PRESSURE RATING: 175 PSIG MINIMUM. TYPE: AUTOMATIC DRAINING, BALL CHECK. SIZE: NPS 3/4. END CONNECTIONS: THREADED.

F. RISER ALARM EQUIPMENT

1. ENSURE RISER ALARM EQUIPMENT IS UL LISTED OR FM APPROVED FOR FIRE-PROTECTION USE.

2. WET-PIPE ALARM CHECK VALVE - PROVIDE WET-PIPE ALARM CHECK VALVE, COMPLETE WITH STANDARD ACCESSORIES AND TRIM NECESSARY TO GIVE AN ALARM AND INCLUDES PRESSURE GAGES, RETARD CHAMBER, TESTING PROVISIONS, AND ALL NECESSARY INTERCOMPONENT PIPING, FITTINGS, AND VALVES. ENSURE PILOT VALVE AND CLAPPER HAVE INDIVIDUAL ELASTOMER SEATS.

3. STANDARD CHECK VALVE - PROVIDE FM-APPROVED OR UL-LISTED STANDARD SWING-CHECK VALVES WITH ELASTOMER-DISC SEAT. PROVIDE PRESSURE GAGES ON BOTH SIDES OF THE CLAPPER. WATER-FLOW ALARM IS A VANE TYPE.

4. WATER-FLOW ALARM DEVICE - ENSURE WATER-FLOW ALARM DEVICES ARE UL LISTED FOR THE PARTICULAR TYPE OF SYSTEM.

5. PRESSURE SWITCH REMOTE ALARM - WIRE THE PRESSURE SWITCH TO MAKE OR BREAK A CIRCUIT DEPENDING ON RISE OR FALL OF WATER PRESSURE.

6. PRESSURE GAGES - STANDARD: UL 393. DIAL SIZE: 3-1/2- TO 4-1/2-INCH DIAMETER. PRESSURE GAGE RANGE: 0 TO 300 PSIG. WATER SYSTEM PIPING GAGE: INCLUDE "WATER" OR "AIR/WATER" LABEL ON DIAL FACE. AIR SYSTEM PIPING GAGE: INCLUDE RETARD FEATURE AND "AIR" OR "AIR/WATER" LABEL ON DIAL FACE.

I. FIRE-DEPARTMENT CONNECTIONS

1. ENSURE HOSE CONNECTIONS HAVE NATIONAL FIREHOSE STANDARD-THREAD FORM AND ROCKER LUGS IN ACCORDANCE WITH NFPA 1963. ENSURE HOSE-CONNECTION SIZES AND THREADS ARE COMPATIBLE WITH THE EQUIPMENT USED BY THE FIRE DEPARTMENT SERVING THE FACILITY.

2. SIDEWALK SIAMESE - PROVIDE CAST BRASS OR BRONZE UNIT, WITH TWO 2-1/2-INCH, FIRE-DEPARTMENT, SWIVEL, FEMALE INLETS; DOUBLE-CLAPPER VALVES; ROCKER-LUG CAPS AND CHAINS; AND CAST-IN FUNCTION-IDENTIFYING LETTERING. PROVIDE A UNIT WITH A CHROME-PLATED OR POLISHED SURFACE FINISH. ENSURE CHROME PLATE IS IN ACCORDANCE WITH ASME A112.18.1/CSA B125.1. MOUNT UNIT ON A SCHEDULE 40 ASTM A53/A53M GALVANIZED CARBON-STEEL PIPE WITH RED-ENAMELED FINISH ON PRIME-COATED SURFACE. PROTECT ALL SURFACES EMBEDDED IN CONCRETE OR BELOW GRADE WITH A 0.508 MILLIMETER 20-MIL THICK BITUMINOUS COATING.

J. SPRINKLER SPECIALTY PIPE FITTINGS

1. BRANCH OUTLET FITTINGS: STANDARD: UL 213. PRESSURE RATING: 175 PSIG MINIMUM. BODY MATERIAL: DUCTILE-IRON HOUSING WITH EPDM SEALS AND BOLTS AND NUTS. TYPE: MECHANICAL-T AND -CROSS FITTINGS. CONFIGURATIONS: SNAP-ON AND STRAPLESS, DUCTILE-IRON HOUSING WITH BRANCH OUTLETS. SIZE: OF DIMENSION TO FIT ONTO SPRINKLER MAIN AND WITH OUTLET CONNECTIONS AS REQUIRED TO MATCH CONNECTED BRANCH PIPING. BRANCH OUTLETS: GROOVED, PLAIN-END PIPE, OR THREADED.

2. FLOW DETECTION AND TEST ASSEMBLIES - STANDARD: UL'S "FIRE PROTECTION EQUIPMENT DIRECTORY" LISTING OR "APPROVAL GUIDE," PUBLISHED BY FM GLOBAL, LISTING. PRESSURE RATING: 175 PSIG MINIMUM. BODY MATERIAL: CAST- OR DUCTILE-IRON HOUSING WITH ORIFICE, SIGHT GLASS, AND INTEGRAL TEST VALVE. SIZE: SAME AS CONNECTED PIPING. INLET AND OUTLET: THREADED.

3. ZONE/FLOOR CONTROL MODULE - UL LISTED, FM APPROVED COMPLETE WITH FLOW SWITCH, PRESSURE GAGE, AND BALL VALVE.

4. BRANCH LINE TESTERS - STANDARD: UL 199. PRESSURE RATING: 175 PSIG MINIMUM. BODY MATERIAL: BRASS. SIZE: SAME AS CONNECTED PIPING. INLET: THREADED. DRAIN OUTLET: THREADED AND CAPPED. BRANCH OUTLET: THREADED, FOR SPRINKLER.

5. SPRINKLER INSPECTOR'S TEST FITTINGS - STANDARD: UL'S "FIRE PROTECTION EQUIPMENT DIRECTORY" LISTING OR "APPROVAL GUIDE," PUBLISHED BY FM GLOBAL, LISTING. PRESSURE RATING: 175 PSIG MINIMUM. BODY MATERIAL: CAST- OR DUCTILE-IRON HOUSING WITH SIGHT GLASS. SIZE: SAME AS CONNECTED PIPING. INLET AND OUTLET: THREADED.

6. ADJUSTABLE DROP NIPPLES - STANDARD: UL 1474. PRESSURE RATING: 250 PSIG MINIMUM. BODY MATERIAL: STEEL PIPE WITH EPDM-RUBBER O-RING SEALS. SIZE: SAME AS CONNECTED PIPING. LENGTH: ADJUSTABLE.INLET AND OUTLET: THREADED.

7. BRAIDED FLEXIBLE, SPRINKLER HOSE FITTINGS - STANDARD: UL 1474. TYPE: FLEXIBLE HOSE FOR CONNECTION TO SPRINKLER, AND WITH BRACKET FOR CONNECTION TO CEILING GRID. PRESSURE RATING: 175 PSIG MINIMUM. FM APPROVED. SIZE: SAME AS CONNECTED PIPING, FOR SPRINKLER.

K. SPRINKLERS

1. MANUFACTURERS: SUBJECT TO COMPLIANCE WITH REQUIREMENTS, PROVIDE PRODUCTS BY ONE OF THE FOLLOWING:
   c. GLOBE FIRE SPRINKLER CORPORATION.
   d. RELIABLE AUTOMATIC SPRINKLER CO., INC.
   e. VIKING CORPORATION.
   f. VICTAULIC COMPANY.

2. GENERAL REQUIREMENTS - STANDARD: UL'S "FIRE PROTECTION EQUIPMENT DIRECTORY" LISTING OR "APPROVAL GUIDE," PUBLISHED BY FM GLOBAL, LISTING. PRESSURE RATING FOR AUTOMATIC SPRINKLERS: 175 PSIG MINIMUM.. SPRINKLERS SHALL BE USED IN ACCORDANCE WITH THEIR LISTED COVERAGE LIMITATIONS. SPRINKLER TEMPERATURE CLASSIFICATION SHALL BE ORDINARY. SPRINKLERS IN HIGH HEAT AREAS INCLUDING ATTIC SPACES OR IN CLOSE PROXIMITY TO UNIT HEATERS SHALL HAVE TEMPERATURE CLASSIFICATION IN ACCORDANCE WITH NFPA 13.

3. SPRINKLER TYPES:
   a. RESIDENTIAL CONCEALED SPRINKLER: CONCEALED SPRINKLER SHALL BE BRASS FINISH AND SHALL HAVE A NOMINAL K-FACTOR OF 4.9. COVER TO BE COLOR SELECTED BY ARCHITECT.
   b. RESIDENTIAL UPRIGHT SPRINKLER: UPRIGHT SPRINKLER SHALL BE BRASS AND SHALL HAVE A NOMINAL K-FACTOR OR 4.9.
   c. RESIDENTIAL CONCEALED SIDEWALL SPRINKLER: SIDEWALL SPRINKLER SHALL HAVE A K-FACTOR OF 5.8. SIDEWALL SPRINKLER SHALL HAVE A BRASS FINISH WITH A LOW PROFILE COVER PLATE. COVER PLATE COLOR TO BE SELECTED BY ARCHITECT.
   d. QUICK RESPONSE UPRIGHT SPRINKLER: QUICK RESPONSE UPRIGHT SPRINKLER SHALL BE BRASS WITH STAINLESS STEEL DEFLECTOR AND A NOMINAL K-FACTOR OF 5.6.
   e. QUICK RESPONSE CONCEALED PENDENT SPRINKLER: QUICK RESPONSE CONCEALED PENDENT SPRINKLER SHALL HAVE A BRASS FINISH WITH A LOW PROFILE COVER PLATE. COVER PLATE COLOR TO BE SELECTED BY ARCHITECT.

4. SPRINKLER ESCUTCHEONS: MATERIALS, TYPES, AND FINISHES FOR THE FOLLOWING SPRINKLER MOUNTING APPLICATIONS. ESCUTCHEONS FOR CONCEALED, FLUSH, AND RECESSED-TYPE SPRINKLERS ARE SPECIFIED WITH SPRINKLERS.
   a. SIDEWALL MOUNTING: CHROME-PLATED STEEL, ONE PIECE, FLAT.

5. SPRINKLER GUARDS - GUARDS SHALL BE A STEEL WIRE CAGE DESIGNED TO ENCASE THE SPRINKLER AND PROTECT IT FROM MECHANICAL DAMAGE.

L. BACKFLOW PREVENTERS

1. BASIS-OF-DESIGN PRODUCT: SUBJECT TO COMPLIANCE WITH REQUIREMENTS, PROVIDE WATTS REGULATOR COMPANY SERIES 757DCDA BFG OR A COMPARABLE PRODUCT BY ONE OF THE FOLLOWING: AMES, FEBCO,. ZURN

2. THE DOUBLE CHECK DETECTOR ASSEMBLY SHALL CONSIST OF TWO INDEPENDENT TRI-LINK CHECK VALVES WITHIN A SINGLE HOUSING, SLEEVE ACCESS PORT, FOUR TEST COCKS AND TWO DRIP TIGHT SHUT-OFF VALVES. TRI-LINK CHECKS SHALL BE REMOVABLE AND SERVICEABLE, WITHOUT THE USE OF SPECIAL TOOLS.

3. THE BYPASS ASSEMBLY SHALL CONSIST OF A METER, WHICH REGISTERS IN EITHER GALLON OR CUBIC MEASUREMENT, A DOUBLE CHECK BACKFLOW ASSEMBLY AND REQUIRED TEST COCKS

4. THE HOUSING SHALL BE CONSTRUCTED OF 304 SCHEDULE 40 STAINLESS STEEL PIPE WITH GROOVE END CONNECTIONS. TRI-LINK CHECKS SHALL HAVE REVERSIBLE ELASTOMER DISCS AND IN OPERATION SHALL PRODUCE DRIP TIGHT CLOSURE AGAINST REVERSE FLOW CAUSED BY BACKPRESSURE OR BACKSIPHONAGE.

5. UL/FM GROOVED GEAR OPERATED BUTTERFLY VALVES WITH TAMPER SWITCH.

6. APPROVE IN ACCORDANCE WITH ASSE 1048

M. IDENTIFICATION AND PAINTING

1. NAMEPLATES- PROVIDE 0.125 INCH THICK MELAMINE LAMINATED PLASTIC NAMEPLATES, BLACK MATTE FINISH WITH WHITE CENTER CORE, FOR EQUIPMENT, GAGES, VALVES; ETC.

2. LABEL BASE OF EACH RISER WITH DESIGN FLOW AND PRESSURE INFORMATION PER NFPA 13.

3. SELF-ADHESIVE PIPE LABELS: PRINTED PLASTIC WITH CONTACT-TYPE, PERMANENT-ADHESIVE BACKING. PIPE LABEL CONTENTS: INCLUDE IDENTIFICATION OF PIPING SERVICE USING SAME DESIGNATIONS OR ABBREVIATIONS AS USED ON DRAWINGS, PIPE SIZE, AND AN ARROW INDICATING FLOW DIRECTION.

4. DIAGRAMS - CHART LISTING OF EQUIPMENT IS BY DESIGNATION NUMBER AND SHOWS PERTINENT DATA. MOUNT MECHANICAL DRAWINGS IN EXTRUDED ALUMINUM FRAMES WITH 1/8-INCH THICK ACRYLIC PLASTIC PROTECTION. PROVIDE A MINIMUM OF ONE MOUNTED CHART AND DIAGRAM, PLUS ONE EXTRA COPY FOR EACH FIRE-PROTECTION SYSTEM.

5. IF MANUFACTURER'S STANDARD-FINISH EQUIPMENT SURFACES ARE DAMAGED DURING CONSTRUCTION, BRING TO AS-NEW CONDITION BY TOUCHUP OR REPAINTING. THOROUGHLY CLEAN AND PAINT HANGERS, SUPPORTS, AND OTHER IRON WORK IN CONCEALED SPACES WITH ONE COAT OF PRIMER PAINT. APPLY TWO COATS OF PAINT TO ALL EXPOSED PIPING, VALVES, AND APPURTENANCES EXCLUDING HOSES, HOSE NOZZLES AND SIAMESE CONNECTIONS. USE PAINT AND PAINT COLOR RED, PER ARCHITECTURAL DIVISION 9 SPECIFICATIONS

N. INSTALLATION

1. ENSURE INSTALLATION OF SYSTEM MATERIALS AND EQUIPMENT IS IN ACCORDANCE WITH THE RECOMMENDATIONS AND PROVISIONS OF NFPA 13, NFPA 13R, NFPA 14, AND NFPA 24. PERFORM ALL INSTALLATION WORK BY LICENSED FIRE PROTECTION SPRINKLER CONTRACTORS, LICENSED FOR SUCH WORK IN THE STATE WHERE THE WORK IS TO BE PERFORMED.

2. SUPPORTS - SUPPORT TO THE REQUIREMENTS OF THE APPROPRIATE NFPA STANDARD, AND TO ALL STRUCTURAL ENGINEER'S REQUIREMENTS.

3. THRUST BLOCKS - CONSTRUCT 3,000-PSI CURED-STRENGTH THRUST BLOCKS TO ABSORB HYDRAULIC THRUST AT CAPS, PLUGS, AND AT SYSTEM CHANGE-OF-DIRECTION FITTINGS. PLACE CONCRETE AGAINST UNDISTURBED SOIL, WITH AN AREA SUFFICIENT TO PROVIDE LOAD TRANSMITTAL.

4. SOUND STOPPING - PROVIDE EFFECTIVE SOUND STOPPING AND ADEQUATE OPERATING CLEARANCE TO PREVENT STRUCTURE CONTACT WHERE PIPING PENETRATES WALLS, FLOORS, OR CEILINGS; INTO OCCUPIED SPACES ADJACENT TO EQUIPMENT ROOMS; WHERE SIMILAR PENETRATIONS OCCUR BETWEEN OCCUPIED SPACES; AND WHERE PENETRATIONS OCCUR FROM PIPE CHASES INTO OCCUPIED SPACES, OCCUPIED SPACES INCLUDE SPACE ABOVE CEILING WHERE NO SPECIAL ACOUSTIC TREATMENT OF CEILING IS PROVIDED.
   a. CONSTRUCT PENETRATIONS WITH FINISHES COMPATIBLE WITH SURFACE BEING PENETRATED.
   b. SOUND STOPPING AND VAPOR-BARRIER SEALING OF PIPE SHAFTS, AND LARGE FLOOR AND WALL OPENINGS MAY BE ACCOMPLISHED BY PACKING WITH PROPERLY SUPPORTED MINERAL FIBER INSULATION OR BY FOAMING-IN-PLACE WITH SELF-EXTINGUISHING,2-POUND DENSITY POLYURETHANE FOAM TO A DEPTH NOT LESS THAN 6 INCHES.
   c. ENSURE VAPOR BARRIER IS NOT LESS THAN 1/8-INCH THICKNESS OF VINYL MASTIC APPLIED TO VISIBLE AND ACCESSIBLE SURFACES. WHERE FIRE STOPPING IS A CONSIDERATION, USE ONLY MINERAL FIBER, AND, IN ADDITION, COVER OPENINGS WITH 16-GAGE SHEET METAL.

5. SLEEVES - PROVIDE SLEEVES WHERE PIPING PASSES THROUGH ROOFS, MASONRY OR CONCRETE WALLS, OR FLOORS.

6. ESCUTCHEONS - INSTALL ESCUTCHEONS AT PENETRATIONS OF PIPING INTO FINISHED AREAS. WHERE FINISHED AREAS ARE SEPARATED BY PARTITIONS THROUGH WHICH PIPING PASSES, PROVIDE ESCUTCHEONS ON BOTH SIDES OF THE PARTITION. WHERE SUSPENDED CEILINGS ARE INSTALLED, ATTACH PLATES AT THE UNDERSIDE ONLY OF SUCH CEILINGS. USE CHROME PLATED ESCUTCHEONS IN OCCUPIED SPACES AND CONCEAL OPENINGS IN BUILDING CONSTRUCTION. ENSURE ESCUTCHEONS ARE FIRMLY ATTACHED.

7. FLASHINGS - INSTALL FLASHINGS AT SYSTEMS PENETRATIONS OF BUILDING BOUNDARIES AS INDICATED.

8. ELECTRICAL WORK - ELECTRICAL WORK IS SPECIFIED IN DIVISION 26 ELECTRICAL.

9. SPRINKLER SCHEDULE

   a. USE SPRINKLER TYPES IN SUBPARAGRAPHS BELOW FOR THE FOLLOWING APPLICATIONS:

   i. DWELLING UNITS: RESIDENTIAL CONCEALED PENDENT SPRINKLERS, RESIDENTIAL CONCEALED SIDEWALL SPRINKLERS.
   ii. CORRIDORS WITHOUT SUSPENDED CEILING: RESIDENTIAL UPRIGHT SPRINKLERS
   iii. ORDINARY HAZARD AREAS WITHOUT SUSPENDED CEILING: QUICK RESPONSE UPRIGHT SPRINKLERS.
   ij. ORDINARY HAZARD AREAS WITH SUSPENDED CEILING: QUICK RESPONSE CONCEALED PENDENT SPRINKLERS.

   b. PROVIDE SPRINKLER TYPES IN SUBPARAGRAPHS BELOW WITH FINISHES INDICATED

10. FLUSHING - FLUSH ALL PIPING PER NFPA 13.

11. TESTING
   i. PERFORM ALL TESTING TO THE REQUIREMENTS OF THE APPROPRIATE NFPA STANDARD.
   j. PROVIDE CERTIFICATES OF TESTING. CONDUCT A HYDROSTATIC TEST, UNLESS OTHERWISE SPECIFIED. USE ONLY POTABLE WATER FOR TESTING. PERFORM AIR TESTS, VALVE-OPERATING TESTS, AND DRAINAGE TESTS FOR DRY-PIPE SYSTEMS.
   k. PERFORM FULL-FLOW SYSTEM OPERATING TESTS FOR STANDPIPE SYSTEMS.
   l. PREPARE AND MAINTAIN TEST RECORDS OF PIPING-SYSTEM TESTS. ENSURE RECORDS SHOW PERSONNEL RESPONSIBILITIES, DATES, TEST-GAGE IDENTIFICATION NUMBERS, AMBIENT AND TEST-WATER TEMPERATURES, PRESSURE RANGES, RATES OF PRESSURE DROPS, AND LEAKAGE RATES.

13. ADJUSTING AND CLEANING - AT THE COMPLETION OF THE WORK, CLEAN ALL PARTS OF THE INSTALLATION. CLEAN EQUIPMENT, PIPES, VALVES, AND FITTINGS OF GREASE, METAL CUTTINGS, AND SLUDGE THAT MAY HAVE ACCUMULATED FROM THE INSTALLATION AND TESTING OF THE SYSTEM. ADJUST AUTOMATIC CONTROL DEVICES FOR PROPER OPERATION.

CODE COMPLIANCE: THIS PROJECT HAS BEEN DESIGNED IN ACCORDANCE WITH THE PUERTO RICO EXISTING BUILDING CODE 2018 EDITION. CONTRACTORS ARE NOT ALLOWED TO MAKE CHANGES TO THIS PROJECT WITHOUT WRITTEN AUTHORIZATION OF THE ARCHITECT OF RECORD.

FJM Engineering, psc
Consulting Engineers
352 San Claudio St., STE 1, PMB 367, San Juan, PR 00926-4144
Tel: (787) 722-3641 / Cel: (787) 632-1494
E-mail: FMate@fjm-eng.com

FRANCISCO J. MATE INGENIERO LICENCIADO LIC. #13947 PUERTO RICO

Yo, Francisco J. Mate Cabrera, Lic. #13947, certifico que soy el profesional que diseñó estos planos y las especificaciones complementarios. Certifico además que estos planos y especificaciones cumplen con las disposiciones aplicables del Reglamento Conjunto y las Ordenanzas Municipales aplicables, Código de Construcción Vigentes de las Corporaciones Públicas con jurisdicción Certifico, además, que en la preparación de estos planos y especificaciones no se violó ninguna ley según lo dispuesto en la Ley Núm. 14 de 8 de enero de 2004, según enmendada, conocida como la "Ley para Reglamentar el Ejercicio de la Profesión de la Ingeniería y de la Agrimensura" y según enmendada; Ley Núm. 96 de 6 de julio de 1988, según enmendada, conocida como la "Ley de Reconozco que cualquier declaración falsa o falsificación de los hechos que se haya producido en el contenido de este documento puede exponer mí, mis agentes o empleados, o por otras personas con mi conocimiento, me hacen responsable de acciones disciplinarias y judicial y disciplinaria por la OGPe.

CERTIFIED:

arquiteg
ARQUITECTOS
INGENIEROS
PLANIFICADORES

CONSTRUCTION AND FACILITIES MANAGEMENT OFFICE

PUERTO RICO ARMY NATIONAL GUARD
#552 BORINQUENEER TRAIL, FORT BUCHANAN, PUERTO RICO 00934

PROJECT:
RESTORATION REPAIR OF BUILDING 149, FATC I P/N: 432122
FORT ALLEN TRAINING CENTER, JUANA DIAZ, PUERTO RICO

NO.	DESCRIPTION	DATE

REVISIONS

NO.	DESCRIPTION	DATE

100% BIDDING SET
NOT FOR CONSTRUCTION
BY: V.M.V. DATE: NOV 04, 2024

DESIGN:
VICTOR M. VILLEGAS
ANDRÉS M. VILLEGAS
GILBERTO A. MENDOZA
CARLA G. VILLARRUBIA
ELIAS VALDES
MARIELA SUÁREZ
JUAN CAMILO OSORIO

SUPERVISOR:
VICTOR SANCHEZ, P.E.

SHEET NUMBER:
FP-01

SHEET TITLE:
FIRE PROTECTION SPECIFICATIONS

SHEET: TOTAL SHEETS: OF

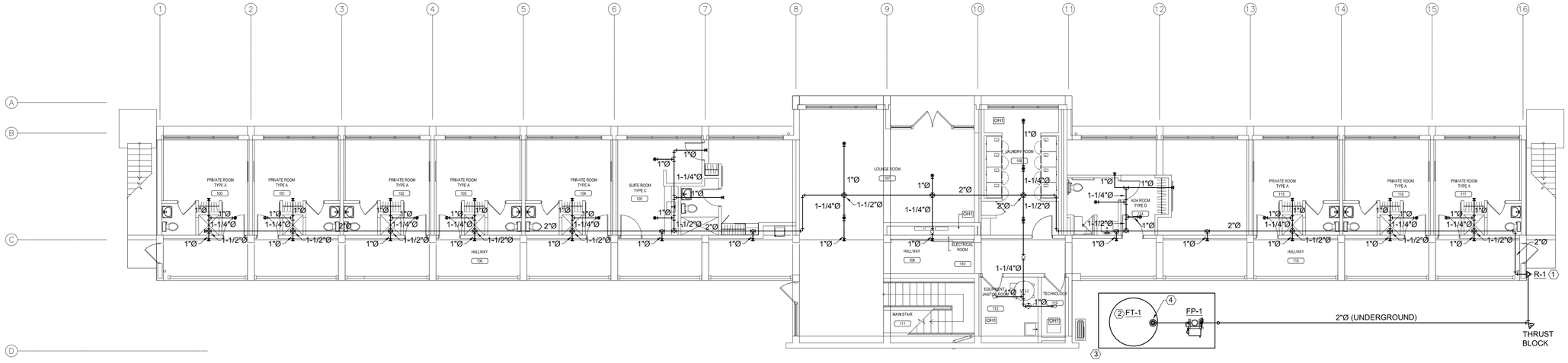

1 FIRE PROTECTION PLAN - FIRST FLOOR
SCALE: 1/8" = 1'-0"

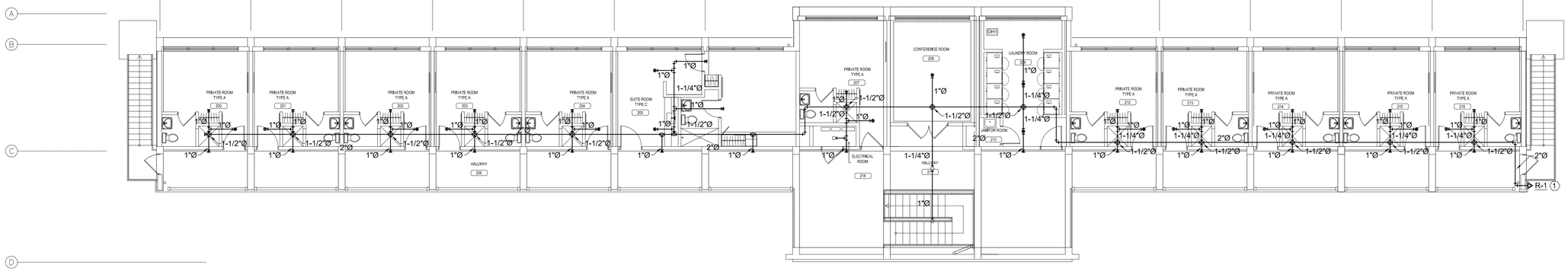

2 FIRE PROTECTION PLAN - SECOND FLOOR
SCALE: 1/8" = 1'-0"

OCCUPANCY CLASSIFICATION

LIGHT HAZARD - AREAS NOT OTHERWISE LABELED ARE CONSIDERED LIGHT HAZARD OCCUPANCIES.

ORDINARY HAZARD - GROUP 1 (OH1) AS SHOWN ON DRAWINGS.

IMPORTANT NOTES

1. PIPING LAYOUT AND SIZES ARE ESTIMATED. CONTRACTOR SHALL VERIFY ACTUAL CONDITIONS ON THE FIELD AND NOTIFY ENGINEER OF ANY CIRCUMSTANCES THAT MAY IMPACT THE SCOPE OF WORK.

(#) SHEET KEYNOTES

1. PROVIDE 2"Ø SYSTEM RISER AND APPURTENANCES. CONTROL VALVE SHALL BE LOCKED OPEN AT ALL TIMES.
2. PROVIDE 2,000 GALLONS WATER STORAGE TANK. TANK SHALL COMPLY WITH ALL NFPA 22 "STANDARD FOR WATER TANKS FOR PRIVATE FIRE PROTECTION" REQUIREMENTS
3. PROVIDE CONCRETE PAD TO SUPPORT TANK AND FIRE PROTECTION EQUIPMENT. ANCHOR TANK TO PAD TO PROTECT IT AGAINST BUOYANCY FORCES IN CASE OF FLOODING.
4.

DESIGN APPROACH

INSIDE DWELLING UNITS / CORRIDORS / LOBBIES / LOUNGES
AREAS LISTED ABOVE SHALL BE PROTECTED BY LISTED RESIDENTIAL SPRINKLERS. FIRE PROTECTION SHALL BE PROVIDED BY A WET PIPE AUTOMATIC SPRINKLER SYSTEM UTILIZING STEEL SUPPLY PIPING. THE SYSTEM SHALL PROVIDE AT LEAST THE FLOW REQUIRED TO PRODUCE A MINIMUM DENSITY OF 0.05 GPM/SQ. FT. OR THE SPRINKLER LISTING, WHICHEVER IS GREATER, TO THE DESIGN SPRINKLERS. MAXIMUM SPACING AND PROTECTION AREA SHALL BE AS LISTED BY THE MANUFACTURER.

LAUNDRY ROOM / ELECTRICAL CLOSETS / STORAGE
ORDINARY HAZARD
LISTED RESIDENTIAL SPRINKLERS SHALL BE PERMITTED TO BE USED IN ORDINARY HAZARD AREAS THAT MEET THE FOLLOWING CONDITIONS:
1. THE AREA IS COMPARTMENTED INTO 500 SQ. FT. OR LESS BY 30-MINUTE FIRE-RATED CONSTRUCTION.
2. THE SPRINKLERS ARE SPACED AT 130 SQ. FT. PER SPRINKLER.
3. OPENINGS HAVE A LINTEL AT LEAST 8 IN. IN DEPTH.
4. THE TOTAL AREA OF OPENINGS DOES NOT EXCEED 50 SQ. FT. FOR EACH COMPARTMENT.
5. DENSITY IS TO BE HYDRAULICALLY CALCULATED TO BE AT LEAST 0.20 GPM/SQ. FT.

OTHERWISE, SPRINKLERS SHALL BE QUICK RESPONSE. DENSITY IS TO BE HYDRAULICALLY CALCULATED TO BE AT LEAST 0.20 GPM/SQ. FT., A MAXIMUM SPACING OF 15 FEET, AND A MAXIMUM PROTECTION AREA OF 130 SQUARE FEET PER HEAD SHALL BE UTILIZED FOR STANDARD SPACING HEADS. HEAD TEMPERATURE RATING IS TO BE ORDINARY (135-170 °F) AS DEFINED IN NFPA 13, TABLE 6.2.5.1 "TEMPERATURE RATINGS, CLASSIFICATIONS, AND COLOR CODINGS."

FJM Engineering, psc
Consulting Engineers
352 San Claudio St., STE 1, PMB 367, San Juan, PR 00926-6144
Tel: (787) 722-4641 / Cel: (787) 632-1494
E-mail: FMate@fjm-eng.com

CODE COMPLIANCE: THIS PROJECT HAS BEEN DESIGNED IN ACCORDANCE WITH THE PUERTO RICO EXISTING BUILDING CODE 2018 EDITION. CONTRACTORS ARE NOT ALLOWED TO MAKE CHANGES TO THIS PROJECT WITHOUT WRITTEN AUTHORIZATION OF THE ARCHITECT OF RECORD.

FRANCISCO J. MATE INGENIERO LICENCIADO LIC. #13947 PUERTO RICO

Yo, *Francisco J. Mate Cabrera, Lic. #13947*, certifico que soy el profesional que diseñó estos planos y las especificaciones complementarias. Hago constar que los mismos y las obras y especificaciones cumplen con las disposiciones aplicables del Reglamento Conjunto y las disposiciones del Reglamento de Permisos y Códigos de Construcción Vigentes de las Corporaciones Públicas con jurisdicción Científico, además, que en la preparación de estos planos y especificaciones se cumplió con la Ley Núm. 173 de 12 de agosto de 2004, según enmendada, conocida como la "Ley para la Inversión en la Educación Pública" y con la Ley Núm. 319 de 15 de mayo de 1938, según enmendada, Ley Núm. 96 de 6 de julio de 1988, según enmendada, conocida como la "Ley de Reconocimiento de Profesiones". Reconozco que cualquier declaración falsa o falsificación de los hechos que se haya producido para el diseño de estos planos y especificaciones por mí, mis agentes o empleados, o por otras personas con mi conocimiento, me hacen responsable de cualquier acción disciplinaria y/o judicial por la OGPe.

CERTIFIED:

arquiteg
ARQUITECTOS
INGENIEROS
PLANIFICADORES

CONSTRUCTION AND FACILITIES MANAGEMENT OFFICE

PUERTO RICO ARMY NATIONAL GUARD
#552 BORINQUENEER TRAIL, FORT BUCHANAN, PUERTO RICO 00934

PROJECT:
RESTORATION REPAIR OF BUILDING 149, FATC I P/N: 432122
FORT ALLEN TRAINING CENTER, JUANA DIAZ, PUERTO RICO

NO.	DESCRIPTION	DATE
	REVISIONS	

100% BIDDING SET
NOT FOR CONSTRUCTION
BY: V.M.V. DATE: NOV 04, 2024

DESIGN:
VICTOR M. VILLEGAS
ANDRÉS M. VILLEGAS
GILBERTO A. MENDOZA
CARLA G. VILLARRUBIA
ELIAS VALDES
MARIELA SUÁREZ
JUAN CAMILO OSORIO

SUPERVISOR:
VICTOR SANCHEZ, P.E.

SHEET NUMBER:
FP-02

SHEET TITLE:
FIRE PROTECTION PLAN - FIRST & SECOND FLOOR

SHEET: | TOTAL SHEETS: OF

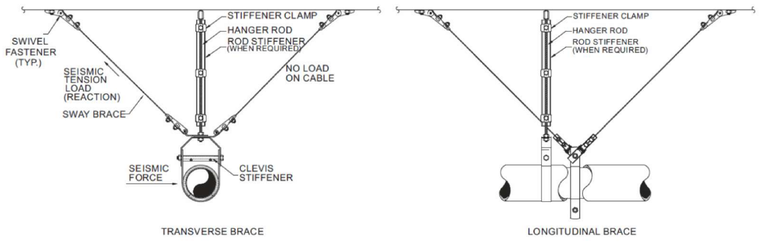

3 TRANSVERSE & LONGITUDINAL CABLE BRACE FOR HORIZONTAL SUSPENDED PIPE

SCALE: N.T.S.

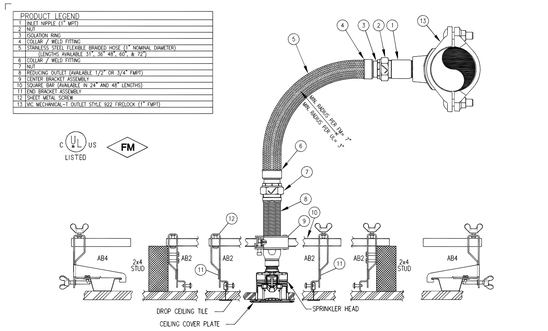

2 BRAIDED FLEXIBLE HOSE SPRINKLER ASSEMBLY DETAIL

SCALE: N.T.S.

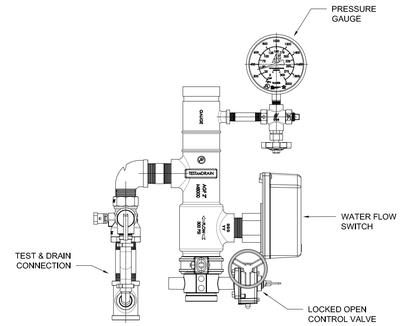

1 RESIDENTIAL RISER ASSEMBLY DETAIL

SCALE: N.T.S.

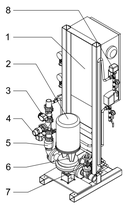

System Specifications:
Motor
-7.5 Horsepower Electric
-230 Volt, 34.6 Amp
-Single Phase
-3450 RPM

Pump
-UL/FM Vertical Inline Fire Pump
-2" Suction (FNPT)
-2" Discharge (Grooved)
-175 PSI max working pressure

System Components (UL Listed by Manufacturer)
-1- Limited Service Fire Pump Controller
-2- Electric Motor
-3- Discharge Monitored Ball Valve
-4- Test Connection Monitored Ball Valve
-5- Check Valve
-6- Vertical Inline Fire Pump
-7- Suction OS&Y
-8- Pressure Switch (Jockey Control)

(All Dimensions Are Approximate)
-36" Depth
-78" Height
-32" Width

7 FIRE PUMP DETAIL

SCALE: N.T.S.

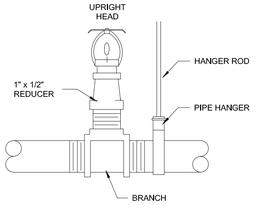

6 UPRIGHT SPRINKLER INSTALLATION

SCALE: N.T.S.

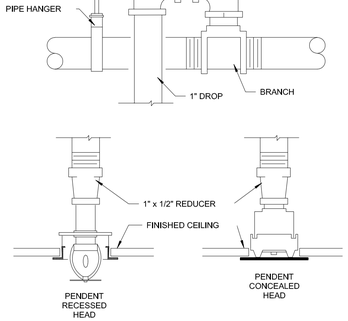

5 RIGID SPRINKLER DROP

SCALE: N.T.S.

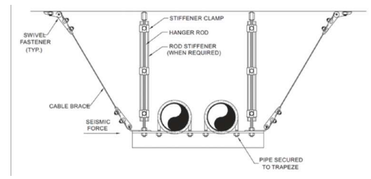

4 CABLE BRACE FOR TRAPEZE SUSPENDED PIPE

SCALE: N

CODE COMPLIANCE: THIS PROJECT HAS BEEN DESIGNED IN ACCORDANCE WITH THE PUERTO RICO EXISTING BUILDING CODE 2018 EDITION. CONTRACTORS ARE NOT ALLOWED TO MAKE CHANGES TO THIS PROJECT WITHOUT WRITTEN AUTHORIZATION OF THE ARCHITECT OF RECORD.

FJM Engineering, psc
Consulting Engineers
352 San Claudio St., STE 1, PMB 367, San Juan, PR 00926-4144
Tel: (787) 722-4641 / Cel: (787) 632-1494
E-mail: FMate@fjm-eng.com

FRANCISCO J. MATE INGENIERO LICENCIADO LIC. #13947 PUERTO RICO

Yo, *Francisco J. Mate Cabrera, Lic. #13947*, certifico que soy el profesional que diseñó estos planos y las especificaciones complementarias. Estos planos y especificaciones cumplen con las disposiciones aplicables del Reglamento Conjunto y las Especificaciones del Reglamento de Construcción y Códigos de Construcción Vigentes de las Corporaciones Públicas con jurisdicción Certifico, además, que en la preparación de estos planos y especificaciones no he violado ningún derecho de autor o lo dispuesto en la Ley Núm. 1 de 8 de enero de 2004, según enmendada, conocida como la "Ley para la Protección de la Propiedad Intelectual" y/o con la (Ley Núm. 319 de 15 de mayo de 1938, según enmendada, Ley Núm. 96 de 6 de julio de 1988, según enmendada, conocida como la "Ley de Tasación de los Hechos que se hayan producido en Ejercicio de Funciones Oficiales"). Reconozco que cualquier declaración falsa o falsificación de los hechos que se haya producido en el ejercicio de mis funciones oficiales, por otras personas con mi conocimiento, me hacen responsable de cualquier acción disciplinaria por la OGPe.

CERTIFIED:

arquiteg
ARQUITECTOS
INGENIEROS
PLANIFICADORES

CONSTRUCTION AND FACILITIES MANAGEMENT OFFICE

PUERTO RICO ARMY NATIONAL GUARD
#552 BORINQUEN TRAIL, FORT BUCHANAN, PUERTO RICO 00934

PROJECT:
RESTORATION REPAIR OF BUILDING 149, FATC I P/N: 432122
FORT ALLEN TRAINING CENTER, JUANA DIAZ, PUERTO RICO

NO.	DESCRIPTION	DATE

REVISIONS

NO.	DESCRIPTION	DATE

100% BIDDING SET
NOT FOR CONSTRUCTION
BY: V.M.V. DATE: NOV 04, 2024

DESIGN:
VÍCTOR M. VILLEGAS
ANDRÉS M. VILLEGAS
GILBERTO A. MENDOZA
CARLA G. VILLARRUBIA
ELIAS VALDES
MARIELA SUÁREZ
JUAN CAMILO OSORIO

SUPERVISOR: VICTOR SANCHEZ, P.E.

SHEET NUMBER: FP-03

SHEET TITLE: FIRE PROTECTION DETAILS

SHEET: TOTAL SHEETS: OF