FW-125 LOW NOISE TYPE COOLING TOWER SPECIFICATION

Type	Induced Draft Cross Flow Vertical Discharge Type

	1 Design Condition	
	Nominal Flow (USGPM)	323.0
	Water Out Temp.	95 °F
	Water In Temp.	85 °F
	Ambient Wet Bulb Temp.	80 °F
	Evaporation Loss	0.83%
	Drift Loss	Less than 0.005%

	2 Overall Dimension	
	Length (Inch)	13'-1"
	Width (Inch)	6'-7"
	Height (Inch)	14'-6"
	Net Weight (lbs)	3260
	Operating Weight (lbs)	6340

	3 Motor	
	Manufacturer	Teco / Tatung or Equivalent
	Type	TEFC
	Volt/Phase/Hz	230/460/3/60HZ
	Power	3HP
	No. of Pole	4
	Speed (rpm)	1745
	Insulation	Class F
	Protection	IP55
	Service Factor	1.15
	No. of Motor	1

	4 Fan	
	Type	Axial
	Air Flow Rate (CFM)	39375
	Speed (rpm)	360
	Diameter (Inch)	63"
	No. of Fan	1
	No. of Fan Blade	4
	Transmission Type	Vee Belt

	5 Operating Condition	
	Nominal Flow (USGPM)	
	Water Out Temp.	°F
	Water In Temp.	°F
	Ambient Wet Bulb Temp.	°F

	6 Infill	
	Sheet Thickness (Inch)	1/64"

	7 Material	
	Air Inlet Louver (Optional)	FRP
	Basin	FRP
	Bolt & Nuts	SS 304
	Casing	FRP
	Distribution Tray	FRP
	Eliminator	FRP
	Fan Blade	Al. Alloy
	Fan Hub	GI + Al. Alloy
	Fan Guard	Hot Dip Galv. Steel
	Fan Stack	FRP
	Infill	PVC
	Infill Support Mesh	Hot Dip Galv. Steel
	Ladder	Hot Dip Galv. Steel
	Motor Support	Hot Dip Galv. Steel
	Strainer	SS 304
	Structure	Hot Dip Galv. Steel
	Sump Tank	FRP
	Pulley Box	FRP

	8 Piping	
	Inlet (Dia/Qty)	4" x 2
	Outlet (Dia/Qty)	6" x 1
	Overflow (Dia/Qty)	2" x 1
	Drain (Dia/Qty)	2" x 1
	Make-up (Dia/Qty)	1" x 1
	Manual Make-up (Dia/Qty)	1" x 1
	Suction tank	1

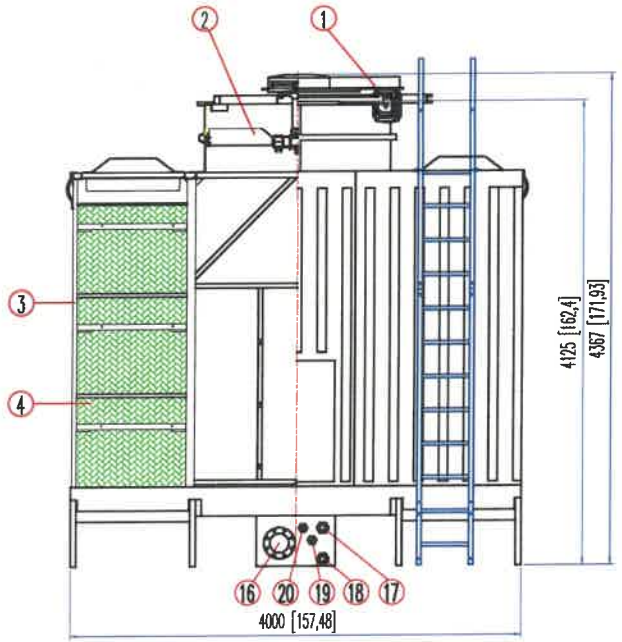

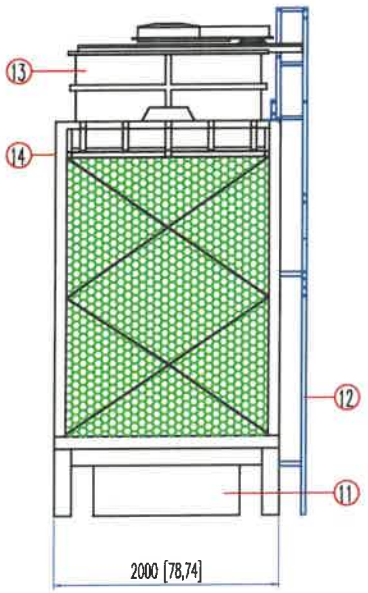

ITEM	PART	SPECIFICATION
1	MOTOR	2.2KW/4P
2	FAN	AL/ø1600MM
3	FRAME WORK	G.I.
4	FILLER SHEET	PVC
5	HOT WATER BASIN COVER(OPTIONAL)	FRP
6	DISTRIBUTION TRAY CAP	FRP
7	HOT WATER BASIN	FRP
8	MOTOR SUPPORT	G.I.
9	FAN GUARD	G.I.
10	BELT GUARD	FRP
11	SUMP TANK	FRP
12	LADDER	G.I.
13	FAN STACK	FRP
14	SIDE PANEL	FRP

ITEM	PART	SPECIFICATION	QTY
15	INLET	6"(FLANGE)	2
16	OUTLET	6"(FLANGE)	1
17	OVERFLOW	2"(ABS SOCKET)	1
18	DRAIN	2"(ABS SOCKET)	1
19	AUTOMATIC MAKE-UP	1"(ABS SOCKET)	1
20	MANUAL MAKE-UP	1"(ABS SOCKET)	1

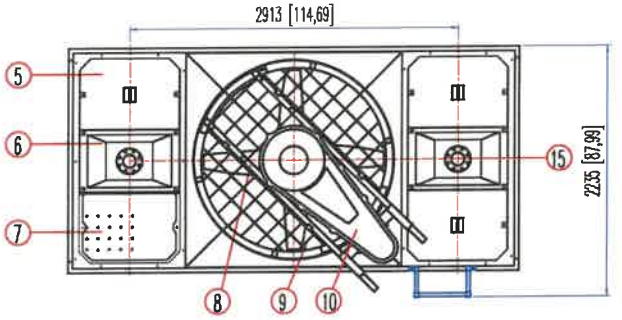

			APPROVED		2018.12.31	ENGINEERED PRODUCTS COMPANY	
			CHECKED		2018.12.31		
			DRAWN	WHG	2018.12.31	DWG TITLE	COOLING TOWER OVERALL DIMENSION
			DESIGNED	KML	2018.12.31	DWG DETAIL	FW-125 SCALE 1:60
REV	APPROVED	DATE	DWG NO.	ADW-0125-R2		PROJECT	