PUERTO RICO AQUEDUCT AND SEWER AUTHORITY
SAN JUAN, PUERTO RICO

Autoridad de Acueductos y Alcantarillados

ESTADO LIBRE ASOCIADO DE PUERTO RICO

Volume B
Standard Contract Documents

JANUARY 2020

General Table of Contents ……..... B.1.1
B.1 - Standard Instructions to Bidders……. B.1.1
B.2 - General Conditions……. B.2.1
B.3 - Standard Technical Specifications…….. B.3.1
B.4 - General Information for Contractors…….. B.4.1
B.5 - Federally Funded Projects.....…….. B.5.1
B.6 - Supplementary Content for Federal Projects……..... B.6.1
B.7 - American Iron and Steel Requirements for State Revolving Fund Projects..... B.7.1

Detailed Table of Contents

B. - Standard Documents

B.1 - STANDARD INSTRUCTIONS TO BIDDERS B.1.1

Article 1. – General…….. B.1.1
Section 1.01 Documents to be submitted with Proposal…… B.1.1

Article 2. - Definition of Terms……..... B.1.1

Article 3. - The Bid…….…….…….... B.1.1
Section 3.01 Work Covered by Proposal…….…….. B.1.1
Section 3.02 Certificate of Bidder Registration……..…..……. B.1.1
Section 3.03 Proposal Guarantee……...…… B.1.2
Section 3.04 Addenda…….....…. B.1.2
Section 3.05 Modifications or withdrawal of Bids……..... B.1.2
Section 3.06 Delayed Proposals……. B.1.2
Section 3.07 Taxes…….……..….. B.1.2
Section 3.08 Payment for Services…….……..……. B.1.2
Section 3.09 Firms, Partnerships or Corporations……...…….. B.1.3

Article 4. - Bidders to Examine Contract Documents and Investigate Site of Work……..…….. B.1.3
Section 4.01 Examination of Contract Documents……...……..... B.1.4
Section 4.02 Land to be Used……...…… B.1.5
Section 4.03 Electric Power, Water, Communications and other Facilities……. B.1.5
Section 4.04 Technical Specifications…….…… B.1.5
Section 4.05 Pre-Bid Meeting…….…… B.1.5

Article 5. - Bid Opening…….…….……. B.1.5
Section 5.01 Bid Opening…..…….……. B.1.5
Section 5.02 Award……..…….…….. B.1.6
Section 5.03 Alternatives…….....…….. B.1.6
Section 5.04 Cancellation of Award…….……... B.1.6
Section 5.05 Execution of Contract……..……....…….…..... B.1.6

Article 6. - Rejection of Proposals and Disqualification of Bidders.....……. B.1.6

Article 7. – Time……..…….…… B.1.7
Section 7.01 Time is of the Essence…..…….. B.1.7

Article 8. - Standard Forms…….……. B.1.8
1. Payment Bond……..…… B.1.9

2. Performance Bond……..……. B.1.12
3. Hold Harmless Agreement……... B.1.14
4. Release of Debt (Relevo de Deuda)……..…….. …..... B.1.15
5. Formulario Representativo del Aviso de Excavación……..… B.1.16
6. Formulario Representativo de Documentos a Someterse con la Solicitud de Permiso CES ……..….. B.1.18
7. Formularios Representativos del Registro Único de Licitadores ……...… B.1.20
8. Formulario Representativo de Permiso Corte del DTOP……...….. B.1.23

Article 9. - EPA, FEMA or HD as the Funding Agency……...……... B.1.30

Article 10. - Rural Development as the Funding Agency…….…….. B.1.32

B.2 - GENERAL CONDITIONS B.2.1

Index…… B.2.3

Part A. Introduction
Article 1. – Legal Basis; Application…….…….…… B.2.7
1.1 Legal Basis……..…….. B.2.7
1.2 Application…….…….. B.2.7

Part B. Uniform General Conditions
Article 1. - Definitions And Terminology……..…….…… B.2.7
1.1 Defined Terms……..……. B.2.7
1.2 Other Terms……...…… B.2.15
1.3 Terminology……..…… B.2.15

Article 2. - Contract Documents……...…….. B.2.16
2.1 Intent and Interpretation of Contract Documents…….. B.2.16
2.2 Order of Precedence of Contract Documents…… B.2.16
2.3 Written Interpretations……...…… B.2.17
2.4 Execution and Correlation…….…… B.2.17
2.5 Review of Contract Documents and Field Conditions by Contractor……... B.2.18
2.6 Amending and Supplementing Contract Documents…… B.2.18
2.7 Copies Furnished, Ownership and Reuse of Documents…….. B.2.19

Article 3. - Bonds And Insurance……..…….. B.2.19
3.1 General for Owners with OCIP……. B.2.19
3.2 General for Owners without OCIP……...……. B.2.19
3.3 Performance, Payment, and Other Bonds……..…… B.2.21
3.4 Workmen’s Compensation Insurance…… B.2.22
3.5 Contractor Liability Insurance……...…… B.2.22
3.6 Business Auto Policy……. B.2.24
3.7 Contract Work – Builders Risk Insurance……...…….. B.2.24
3.8 Installation Floater Policy…….……. B.2.25

3.9 Subcontractor's and Sub-Subcontractor's Liability Insurance…… B.2.26
3.10 Owner's Liability Insurance……. B.2.26

Article 4. – Site…….. B.2.26
4.1 Availability of Lands…….. B.2.26
4.2 Subsurface and Physical Conditions…….. B.2.26
4.3 Differing Subsurface or Physical Conditions…….. B.2.27
4.4 Price and Time Adjustments…….. B.2.28
4.5 Underground Facilities…… B.2.28
4.6 Reference Points……. B.2.29
4.7 Hazardous Environmental Condition at Site…….. B.2.30

Article 5. – Owner……..…… B.2.32
5.1 General…….. B.2.32
5.2 Information and Services Required of the Owner……. B.2.32
5.3 Pay Promptly When Due……. B.2.33
5.4 Owner's Right to Stop to Work……. B.2.33
5.5 Owner's Right to Carry Out the Work Without Terminating the Employment of the Contractor……. B.2.33
5.6 Owner's Right to Clean Up……. B.2.33
5.7 Evidence of Financial Arrangements……. B.2.34
5.8 Limitations on Owner's Responsibilities……. B.2.34

Article 6. – Contractor……. B.2.34
6.1 Supervision and Superintendence…….. B.2.34
6.2 Labor and Working Hours……. B.2.35
6.3 Services, Materials, and Equipment…….. B.2.36
6.4 Progress and Other Schedules…….. B.2.37
6.5 Submittals for Approvals, Substitutes and/or "Equals"…….. B.2.40
6.6 Review of Contract Documents……. B.2.45
6.7 Patent, Fees and Royalties……. B.2.46
6.8 Permits……. B.2.46
6.9 Laws and Regulations …….. B.2.47
6.10 Taxes…….. B.2.48
6.11 Use of Site and Other Areas……. B.2.48
6.12 Record Document……. B.2.50
6.13 Safety and Protection ……. B.2.50
6.14 Safety Representative…… B.2.51
6.15 Hazard Communication Programs …….. B.2.51
6.16 Plans and Working Drawings; As-Built Plans…….. B.2.51
6.17 As Built Record Drawings…… B.2.52
6.18 Notice to Proceed……. B.2.52
6.19 Contractor's General Warranty and Guarantee……. B.2.58
6.20 Indemnification…….. B.2.59
6.21 Subcontractors, Suppliers and Others…… B.2.59

Article 7. - Architect/Engineer And Designated Inspector…….……..…….. B.2.61
7.1 Administration of the Contract…….. B.2.61
7.2 Duties of Architect/Engineer and the Owner's Representative……..… B.2.62

Article 8. - Other Work And Separate Contracts…… B.2.64
8.1 Owner's Right to Award Separate Contract, Perform Work with Owners Employees and Utility Workers. Related Work at Site……..…….. B.2.64
8.2 Owner's Right to Award Separate Contract…….…….. B.2.67
8.3 Mutual Responsibility of Contractors……...…… B.2.67

Article 9. – Time……...…….. B.2.68
9.1 Progress and Completion……..…. B.2.68
9.2 Change of Contract Time……..… B.2.69
9.3 Delays and Extensions of Time……. B.2.69
9.4 Delay Damages…….. B.2.71
9.5 Liquidated Damages……..…… B.2.71
9.6 Early Completion Incentive……..……. B.2.73

Article 10. - Change Of Contract Price, Cost Of The Work And Unit Price Work… B.2.73
10.1 Change of Contract Price……...…… B.2.73
10.2 Cost of the Work……..……. B.2.73
10.3 Cash Allowances……..……. B.2.76
10.4 Unit Price Work……. B.2.77
10.5 Contractor's Fee……...……. B.2.77

Article 11. - Changes In The Work……. B.2.78
11.1 Authorized Changes in the Work……..…… B.2.78
11.2 Unauthorized Changes in the Work ……...…… B.2.79
11.3 Execution of Change Orders and Extra Work Orders……... B.2.79
11.4 Notification to Surety……..…….. B.2.80
11.5 Claims and Disputes …….…….. B.2.80

Article 12. - Tests And Inspections; Correction, Removal Or Acceptance Of Defective Work…….……. B.2.80
12.1 Notice of Defects……..……. B.2.80
12.2 Access to Work……..…… B.2.81
12.3 Tests and Inspections …….…….. B.2.81
12.4 Uncovering Work…….……. B.2.82
12.5 Correction or Removal of Deficient Work……...……. B.2.83
12.6 Correction Period……...…… B.2.83
12.7 Acceptance of Non-Compliant Work ……... B.2.84
12.8 Owner's Right to Correct Deficient Work……...……. B.2.84

Article 13. - Payments and Completion……..…… B.2.85
13.1 Proposal Schedule and Schedule of Values ……... B.2.85
13.2 Progress Payments…….…… B.2.86

13.3 Contractor's Warranty of Title……. B.2.91
13.4 Substantial Completion……..... B.2.91
13.5 Partial Utilization…….. B.2.92
13.6 Final Inspection……. B.2.93
13.7 Final Payment ……..... B.2.93
13.8 Final Completion Delayed……..…….. B.2.94
13.9 Waiver of Claims……..……. B.2.95
13.10 Unilateral Liquidation…….….. B.2.95

Article 14. – Protection and Persons of Property…… B.2.96
14.1 Public Convenience and Safety……. B.2.96
14.2 Laws to be Observed …….…….. B.2.96
14.3 Sanitary, Health and Safety Provisions……. B.2.96
14.4 Labor Relations and Wages …….…….. B.2.97
14.5 Environmental Protection…….. B.2.97
14.6 Construction Over or Adjacent to Navigable Waters ……... B.2.98
14.7 Traffic Protection Devices……..…….. B.2.98
14.8 Use of Explosives…….…. B.2.98
14.9 Protection and Restoration of Property……..... B.2.99
14.10 Forest Protection……..... B.2.100
14.11 Responsibility for Damage Claims……...…. B.2.100
14.12 Contractor's Responsibility for Work……... B.2.100
14.13 Emergencies ……...…… B.2.101

Article 15. - Suspension Of Work And Termination…….……. B.2.102
15.1 Suspension of Work……..… B.2.102
15.2 Owner May Terminate for Cause ……... B.2.104
15.3 Owner May Terminate the Contract for Convenience…….……. B.2.105
15.4 Contractor's Right to Terminate the Contract…….….. B.2.106

Article 16. - Dispute Resolution ……... B.2.107
16.1 Disputes……. B.2.107
16.2 Remedies……... B.2.108
16.3 Mediation……..…. B.2.108
16.4 Arbitration……. B.2.108

Article 17. – Miscellaneous……..... B.2.109
17.1 Governing Law…….. B.2.109
17.2 Federal Funds…… B.2.110
17.3 Notice……..... B.2.110
17.4 Computation of Times……... B.2.110
17.5 Ownership of Documents…….. B.2.111
17.6 Personal Liability of Public Officials…… B.2.111
17.7 No Waiver of Legal Rights…… B.2.111
17.8 Cumulative Remedies ……..…….…..... B.2.111
17.9 Successors and Assigns……...…….. B.2.111

17.10 Survival of Obligations……..…… B.2.111
17.11 Language……... B.2.112
17.12 Amendments ……... B.2.112

Part C. Additional Provisions
Article 1. – Separability Clause; Effectiveness……..…. B.2.112
1.1 Separability Clause……...…. B.2.112
1.2 Effectiveness…….…. B.2.112

Certification…… B.2.113
Letter from "Oficina Procuradora del Ciudadano" dated on February 8, 2011…….. B.2.114
Análisis de Flexibilidad Administrativa y Reglamentaria para Pequeños Negocios . B.2.115

B.3 - STANDARD TECHNICAL SPECIFICATIONS B.3.1

B.4 - GENERAL INFORMATION FOR CONTRACTORS B.4.1
Article 1. - Puerto Rico Aqueduct & Sewer Authority Owner Controlled Insurance Program (OCIP) Manual For Contractors And Subcontractors..... B.4.2
Article 2. - Supplemental General Conditions For The Puerto Rico Aqueduct & Sewer Authority Owner Controlled Insurance Program (OCIP) And Other Insurance And Bond Requirements For Contractors And Subcontractors……..….. B.4.42

B.5 - FEDERALLY FUNDED PROJECTS..... B.5.1

B.6 - ADDITIONAL CONTENT FOR FEDERAL PROJECTS..... B.6.1

B.7 - AMERICAN IRON AND STEEL REQUIREMENTS FOR STATE REVOLVING FUND PROJECTS..... B.7.1
Article 1. - EPA Memorandum dated Mar 20, 2014. Implementation of American Iron and Steel provisions of P.L. 113-76, Consolidated Appropriation Act, 2014 and Guiadance B.7.1
Article 2. - EPA Memorandum dated May 11, 2018. Application of American Iron and Steel Requirement for Drinking Water State Revolving Fund Projects for Fiscal Year 2018..... B.7.21
Article 3. - Drinking Water State Revolving Fund American Iron and Steel Requirement - 2018 Annual Repor Addendum..... B.7.23

COMMONWEALTH OF PUERTO RICO
PUERTO RICO AQUEDUCT AND SEWER AUTHORITY
SAN JUAN, PUERTO RICO

B. - STANDARD DOCUMENTS
B.1 - STANDARD INSTRUCTIONS TO BIDDERS

ARTICLE 1. - GENERAL

Section 1.01 Documents to be submitted with Proposal

The documents to be submitted in the Proposal are included in Article 2. of the Supplementary Instructions to Bidders.

ARTICLE 2. - DEFINITION OF TERMS

The terms used in the Supplementary and Standard Instructions to Bidders are defined in Article 1 – Definitions, of the Section B.2 - General Conditions, unless otherwise indicated herein.

ARTICLE 3. - THE BID

Section 3.01 Work Covered by Proposal

Everything required to complete Work on the Project as described in the Contract Documents shall be considered as included in the Proposal.

Section 3.02 Certificate of Bidder Registration

In compliance with Law 85 of June 18, 2002, all bidders must include with their bids a certification from the Bidder Registration Office of the General Service Administration (*Registro Único de Licitadores de la Administración de Servicios Generales)* indicating they are eligible to participate in bids of the Commonwealth of Puerto Rico. Their office is located in Barbosa Avenue and Quisqueya Street in Hato Rey, P.R., Telephone (787) 759-7676, 759-7380, ext. 2377, 2734, 2735. The following certifications are required to obtain the eligibility certification.

Article 8 titled “Standard Forms” contain representative requirements for admission to the *Registro Único de Licitadores de la Administración de Servicios Generales* for illustration purposes only. The Bidder Registration Office of the General Services Administration has the official requirements that bidders must comply with.

Section 3.03 Proposal Guarantee

The proposal guarantee shall be as specified in Article 3 of the General Conditions titled Insurance and Bonds.

Section 3.04 Addenda

Interpretation in response to inquiries made by prospective Bidders and any supplemental instructions will be issued by PRASA in the form of written Addenda. Such Addenda will be sent via fax, if possible. Otherwise, Bidders must be notified by a telephone call. Only persons who have obtained copies of the Construction Drawings and specifications will be advised. All Addenda so issued must be carefully considered and complied with and shall become part of the Contract Documents. Failure of any Bidder to receive any addendum issued by PRASA shall not relieve him from any obligation under his bid as submitted.

Section 3.05 Modifications or withdrawal of Bids

Bids may be modified or withdrawn on written request received from Bidders prior to the time of opening. Bids withdrawn will not be read in public, and will be returned unopened. Negligence on the part of the Bidder in preparing the bid confers him no right to withdraw the bid after it has been opened.

Any modification to a bid received in writing before the date and time of bid opening will be considered valid if the modification or change to the bid is explained and validated with the signature of the Bidder.

No alteration or addition shall be made to the blanks in the proposal form. A Bidder shall be able to make explanations through a letter included with the proposal. This letter shall be sent in duplicate.

Section 3.06 Delayed Proposals

Bids received after the time specified for opening the bids will not be considered and will be returned unopened.

Section 3.07 Taxes

The attention of Bidders is directed to the fact that some of the items may be subject to Local Government or Federal Tax, and that due cost thereof should be included in the bids.

Section 3.08 Payment for Services

Prospective Bidders should be aware and comply with all requirements of the Puerto Rico Income Tax Law of 1954, as amended, and Circular Letters from the Treasure Department, payment for services to individuals who are citizens of the United States and are not residents of Puerto Rico are subject to a retention of 20%, while payments to individuals who are not citizens of the United States and to corporations not resident in Puerto Rico are subject to a retention of 29%.

Payment for services to individuals, partnerships or corporations who are resident or are authorized to do business in Puerto Rico are subject to a 7% retention, unless it presents a Certificates of Release of Debt from the Puerto Rico Treasury Department indicating a reduced retention amount.

Section 3.09 Firms, Partnerships or Corporations

1. Bids submitted by partnerships must be signed with the name of the partnership by an authorized member or representative authorized to bind the partnership. Bids shall clearly include the name of the partnership, the name of the person signing, his designation or title in the partnership, and his signature.

2. Bids submitted by Corporations must be accompanied by a certificate of the Department of State of Puerto Rico under its seal of office, of the filing of the Charter of Certificate of Incorporation. Such certificate by the Department of State, shall be prima facie evidence of the right of the Corporation to do business in Puerto Rico.

3. Bids submitted by corporations must be signed with the name of the Corporation, followed by the signature and designation of the President, Secretary or any other person authorized to bind the Corporation in the Contract. The names of all persons signing shall be typed or printed below the signature.

4. The General Corporation Law of Puerto Rico states that a corporation organized and existing under the laws of a jurisdiction other than Puerto Rico is a foreign corporation. In order for a foreign corporation to do business in Puerto Rico it must file with the Puerto Rico Department of State a certificate of existence issued by the Secretary of State or other authorized officer of the jurisdiction of its incorporation together with the required application and other requirements. The Bidder that is a corporation organized and existing under laws of a jurisdiction other than Puerto Rico must familiarize themselves and comply with these requirements.

5. A bid by a person who affixed to his signature the word "President", "Secretary", "Agent", or other designation, without disclosing his principal, may be held to be the bid of the individual signing.

6. Satisfactory evidence of the authority of the officer signing on behalf of a Partnership or Corporation shall be furnished when requested.

7. Bidders shall include their full business address in the proposal form.

ARTICLE 4. - BIDDERS TO EXAMINE CONTRACT DOCUMENTS AND INVESTIGATE SITE OF WORK

Section 4.01 Examination of Contract Documents

1. Bidders must carefully examine the Contract Documents and in addition must use whatever means may be necessary to completely satisfy themselves, not only of the quantity of materials and labor, and the extent and requirements of the Work, but also of the actual conditions under which the Work specified is to be performed.

2. Boring logs, water elevations, profiles and other subsurface information shown on the Construction Drawings, or available at PRASA for inspection by the Bidders, were obtained by PRASA for use in the study and design of the project. Such data is made available to the Bidders in good faith so that they may have access to the same subsurface information and other data available to PRASA and shall be supplemented by the personal investigation, interpretation and judgment of the Bidders.

3. It is a prerequisite that all Bidders shall visit the site of the Work to determine actual conditions for themselves. Bidders must carefully examine the specifications and Construction Drawings and in addition must use whatever means may be necessary to completely satisfy themselves, not only of the quantity of materials and labor, and the extent and requirements of the work, but also of the actual conditions under which the work specified is to be performed. If during such site investigations, it should appear that there exist certain paved areas, such as streets, roads, and highways, or portions thereof, or where sidewalks, driveways, or other special surfacing, structures and obstacles are discovered, all of which have not been shown on the Construction Drawings or the specifications, Bidders are hereby made responsible, and therefore are required, to include in their bid prices the cost of removing such paved areas, surfaces, structures and obstacles to the extent necessary to perform the work as specified, and to include also the cost of replacing and restoring such paved areas, surfaces, structures and obstacles to their original conditions; it being further understood, that all bids shall be made as reflecting said costs, and the argument that such costs were not included at the time of bidding shall not constitute grounds upon which to base a claim for adjustment of the bid prices under the a Change Order. It is, therefore, a prerequisite that all Bidders shall visit the site of the work to determine actual conditions for themselves. Prospective Bidders shall submit an affidavit certifying that they visited, examined and evaluated the site of the work. Affidavit form is enclosed.

4. If Bidders fail to fully understand any clause or requirement of the specifications, an inquiry must be made from PRASA for its interpretation of the clause or requirement ten (10) calendar days prior to opening of bids. Such requests shall be addressed to the PRASA Executive President or his designated representative. Questions and clarifications may also be raised at the pre-bid meeting if one is held. PRASA will issue Addenda covering such revisions and/or additions to the Instruction to Bidders and/or to the Bidding Documents that are considered necessary from questions raised or clarifications requested in writing or at the pre-bid meeting if one is held.

5. Specific requirements for the project including those related to the applicable environmental document such as Environmental Evaluation, Environmental Impact Statement (DIA), Not Significant Environmental Impact Statement, or any other environmental document of the Project previously issued by PRASA and related documents may be seen at the Environmental Section, Planning Department, Fifth Floor, Suite 515 of the Puerto Rico Aqueduct and Sewer Authority.

6. Failure on the part of Bidders to thoroughly acquaint themselves with the Work to be performed and the conditions under which it will be performed will not be considered as a valid excuse for claims of any kind after the award of the contract.

7. All necessary studies for bidding purposes shall be made at the Bidder's expense.

Section 4.02 Land to be Used

Bidders shall investigate the property owned by PRASA on the site to determine its suitability for their use. The selected Contractor shall provide, at his own expense, for the use of any additional land or rights of way required by him for the construction of the Work and shall police such lands in a manner satisfactory to PRASA.

Section 4.03 Electric Power, Water, Communications and other Facilities

Bidders are instructed to investigate electric power, water, communication, transportation and other facilities required in connection with the construction of the Work which must be secured by Contractor at his own expense.

Section 4.04 Technical Specifications

All Technical Specifications applying specifically to this project are included herewith as indicated in the Table of Contents.

Section 4.05 Pre-Bid Meeting

The Advertisement for Bids indicates if a pre-bid meeting is to be held, the time and place for such meeting, and if the attendance of Bidders to the pre-bid meeting is a requisite for submitting bids.

ARTICLE 5. - BID OPENING

Section 5.01 Bid Opening

1. No bid, or correction to bids previously submitted, will be accepted on or after the date and time of bid opening.

2. Bids will be opened and read aloud in the place and at the date and time indicated in the Bid Advertisement.

3. The bid-opening act will be open to the public.

4. All bids submitted including proposals and other documents will become property of PRASA after the date and time of the bid opening.

5. When the bidding under consideration requires the posting of a bond, the relevant facts to this will be localized and read out loud.

Section 5.02 Award

The contract will be awarded to the lowest responsive, responsible Bidder considering that his proposal conforms to all conditions indicated in the Bidding documents. The responsibility of the Bidder will be determined by the PRASA. PRASA reserves the right to waive any informalities, to accept any or all bids, and to reject any or all bids and to make award for considerations other than that of price unless the Bid Advertisement indicates otherwise.

PRASA reserves the right to reject any or all Bids, including without limitation, nonconforming, nonresponsive, unbalanced, or conditional Bids. PRASA further reserves the right to reject the Bid of any Bidder whom it finds, after reasonable inquiry and evaluation, to be non-responsible. PRASA also reserves the right to waive all informalities not involving price, time, quantity, quality, delivery, changes in the Work, law compliance and federal funding agency requirements, as applicable.

Section 5.02.1 No Award to Convicts

PRASA will comply with Law 2 of January 2, 2018, and will not award a contract to a natural or judicial person who has been convicted or who have declared themselves guilty of crimes listed in the law. All natural and judicial persons bidding in this project shall submit a declaration under oath before a notary public informing all convictions and instances where bidder has declared himself guilty of crimes listed in Law 2 of January 2, 2018.

Section 5.03 Alternatives

Indicate variation of bid price for Alternatives listed in the Proposal Form. Unless otherwise indicated, include Alternate price as a difference in bid price by adding to or deducting from the base bid price. PRASA will decide the Alternatives to include as part of the Work. In making this decision PRASA will follow the priority of the Alternatives. The priority of the Alternatives is the order they are included in the proposal form. This means that Alternative two can only be selected in Alternative one is selected.

Bids will be evaluated on the total of the base price and the Alternatives selected by PRASA.

Section 5.04 Cancellation of Award

PRASA reserves the right to cancel the award of any contract at any time before the execution of said contract without any liability against PRASA.

Section 5.05 Execution of Contract

1. The Bidder to whom the contract is awarded shall execute the contract within ten (10) calendar days after the date of Notice of Award. The contract will be signed in the name of PRASA by the PRASA Executive President or any authorized representative. No proposal shall be considered binding upon PRASA until the contract has been so signed. Contractor shall be furnished with a signed copy of the contract.

2. Failure of the Bidder to whom an award is made to submit the required documents within the prescribed time and to execute the contract within ten (10) calendar days after the date of Notice of Award, unless an extension of time is granted by PRASA, shall be just cause for cancellation of the award and the forfeiture of the Proposal Guarantee which shall then become the property of PRASA, not as a penalty but in liquidation of damages sustained. This award may then be made to the next lowest responsible Bidder, or the Work may be re-advertised, or performed as PRASA may decide.

3. In case that the PRASA Executive President or his authorized representative fails to execute the contract within the ten (10) calendar day period after the successful Bidder has submitted all the prescribed documents in good order, the Bidder may withdraw his proposal without forfeiture of the Proposal Guarantee, unless the Bidder agrees in writing to a longer period.

ARTICLE 6. - REJECTION OF PROPOSALS AND DISQUALIFICATION OF BIDDERS

PRASA reserves the right to disqualify a Bidder from bidding on a project and reject his proposal for any of the following reasons:

1. Failure on the part of any Bidder to submit the documents and certifications required by Section titled "Documents to be submitted in the Proposal" of the Supplementary Instructions to Bidders.

2. Submission of a proposal with conditions that change or modify the conditions originally stipulated for the bid will be deemed cause for the rejection of the proposal as non-responsive.

3. Submission of two or more proposals by the same Bidder will invalidate all bids submitted by said Bidder.

4. If the Advertisement for Bids indicates that the attendance of Bidders to the pre-bid meeting is a requisite for submitting bids, bids submitted by Bidders who do not attend the pre-bid meeting will be rejected.

5. There is evidence of collusion among Bidders. Bids from participants in collusion among Bidders will be rejected.

6. Lack of competency, adequate organization, plant, machinery or other equipment for the project being bid, or inadequate financial resources as revealed by the Experience and Equipment Statement.

7. Failure to comply with any pre-qualification requirements established by PRASA.

8. Unsatisfactory performance record in previous and/or current contract work for PRASA, as judged on the basis of workmanship and/or progress.

9. Amount of uncompleted work under other contracts or obligations which in the judgment of PRASA might result in unsatisfactory progress in additional work awarded.

10. Default under previous contracts with PRASA or other government agencies.

11. Proposals for items to be paid on a unit price basis which is unbalanced or with a Cost Breakdown which is unbalanced will be rejected and the bidder will be disqualified. The determination of unbalancing will be made by the PRASA.

12. Failure to provide a certificate of bidder registration from the Bidder Registration Office of the General Service Administration (*Registro Único de Licitadores de la Administración de Servicios Generales)* indicating bidder is eligible to participate in bids of the Commonwealth of Puerto Rico.

ARTICLE 7. - TIME

Section 7.01 Time is of the Essence

Completion time, date of Substantial Completion and date of Final Acceptance shall be considered to be of the essence of the contract.

ARTICLE 8. - STANDARD FORMS

The forms to be submitted in the Proposal are found in Article 3 of the Supplementary Instructions to Bidders. The standard forms included below are:

1. Payment Bond
2. Performance Bond
3. Hold Harmless Agreement
4. Release of Debt (Relevo de Deuda)
5. Formulario Representativo del Aviso de Excavación
6. Formulario Representativo de los Documentos a Someterse con la Solicitud de Permiso CES e Información General
7. Formularios Representativos del Registro Único de Licitadores
8. Formulario Representativo de la Otorgación de permiso para corte de pavimento, paseo, talud, acera y/o encintado por el Departamento de Transportación y Obras Públicas.

1. PAYMENT BOND

KNOW ALL MEN BY THESE PRESENTS, that we, the undersigned _____ as principal, _____ _____ and _____ as sureties, are hereby held and firmly bound unto the Puerto Rico Aqueduct and Sewer Authority, San Juan, Puerto Rico, in the sum of _____ _____ ($ _____) Dollars, for the payment of which, well and truly to be made, we hereby jointly and severally bind ourselves, our heirs, executors, administrators, successors and assigns. Signed this _____ day of _____, 20____.

The condition of this obligation is such that:

Whereas, the said principal did on the _____ day of _____, 20___ enter into a contract with the Puerto Rico Aqueduct and Sewer Authority, San Juan, Puerto Rico for furnishing materials and performing labor required for the construction of:

Project: _____
(Project Description)

_____ _____ _____
(CIP NUMBER) (Federal Funding Agency: EPA, FEMA, RD, PWS or N/A) (Funding Agency Number)

located at _____

_____, _____, Puerto Rico,
(Ward) (City)

as stated in his PROPOSAL, which said contract is made a part of this, the bond, the same as though set forth herein.

NOW, THEREFORE, THE CONDITION OF THIS OBLIGATION IS SUCH, that if said Principal and all Subcontractors to whom any portion of the Work provided for in said contract is sublet, shall pay

all lawful claims of Subcontractors and material men for labor performed and materials furnished in the carrying forward, performing or completing of said contract, (we agreeing and assenting that this undertaking shall be for the benefit of any material man having a just claim, as well as for the obligee herein), and shall promptly make payment to all persons who perform labor or render services in the prosecution of the Work provided for in said contract then this obligation shall be void; otherwise to remain in full force and effect.

All persons who have performed labor or rendered services as foresaid shall have a direct right of action against the Principal and Surety, on this Bond, which right of action shall be asserted in proceedings instituted in Puerto Rico. Insofar as permitted by the laws of Puerto Rico, such right of action shall be asserted in a proceeding instituted in the name of the obligate to the use and benefit of the persons instituting such action and of all other persons having claims hereunder shall have the right to be made a party to such proceeding (but not later than twelve months after the complete performance of said Contract and final settlement thereof) and to have such claim adjudicated in such action and judgment rendered thereon.

The Surety shall not be liable hereunder for any damages or compensation recoverable under any workmen's compensation or employer's liability statute.

In no event shall the Surety be liable for a greater sum than that specified in this bond, or subject to any suit, action or proceeding therein that is instituted later than twelve months after the complete performance of said Contract and final settlement thereof.

As used herein the term person refers to any person engaged in the prosecution of the Work provided for in said Contract or in any amendment or extension of or addition to said Contract, who is an agent, servant or employee of the Principal, or of any Subcontractor, or of any assignee of said Principal or of any subcontract or, and also anyone so engaged who performs the work of a laborer or of a mechanic

regardless of any contractual relationship between the Principal, or any assignee of said Subcontractor, and such laborer or mechanic, but shall not include office employees not regularly stationed at the side of the Work.

This bond will remain in full force and effect for an additional year after the date of acceptance of the Work and liquidation of the contract.

SIGNED, SEALED AND DELIVERED This _____ day of _____, _____.

PRINCIPAL:
Firm Name: _____
By (Typed Name):_____,
Authorized Representative
Address: _____
_____
Signature:_____
Date: _____
Seal

SURETY:
Firm Name: _____
By (Typed Name):_____,
Title _____
Address: _____
_____
Signature:_____
Date: _____
Seal

SURETY:
Firm Name:_____
By (Typed Name):_____,
Authorized Representative
Address: _____
_____
Signature:_____
Date: _____
Seal

Note: Date of BOND must not be prior to date of Contract. If Contractor is partnership, all partners should execute BOND.
IMPORTANT: Surety companies executing BONDS must appear on the Treasury Department's most current List (Circular 570 as amended) and be authorized to transact business in the state where the Project is located.

2. PERFORMANCE BOND

KNOW ALL MEN BY THESE PRESENTS, that we, the undersigned _____ as principal, _____ and _____ as sureties, are hereby held and firmly bound unto the Puerto Rico Aqueduct and Sewer Authority, San Juan, Puerto Rico, in the sum of _____ _____ ($ _____) Dollars, for the payment of which, well and truly to be made, we hereby jointly and severally bind ourselves, our heirs, executors, administrators, successors and assigns. Signed this _____ day of _____, _____.

The condition of this obligation is such that:

Whereas, the said principal did on the _____ day of _____, _____ enter into a contract with the Puerto Rico Aqueduct and Sewer Authority, San Juan, Puerto Rico for furnishing materials, equipment and performing labor required for the Construction of:

Project: _____
(Project Description)

_____ _____ _____
(CIP NUMBER) (Federal Funding Agency: EPA, FEMA, RD, PWS or N/A) (Funding Agency Number)

located at _____

_____, _____, Puerto Rico,
(Ward) (City)

as stated in his PROPOSAL, which said contract is made a part of this, the bond, the same as though set forth herein.

Now, if the said principal shall well and faithfully do and perform said contract, then this obligation shall be void; otherwise the same shall remain in full force and effect it being expressly understood and

agreed that the liability of surety for any and all claims hereunder shall in no event exceed the amount of this obligation as herein stated.

The said surety hereby stipulates and agrees that no modification, omissions or addition in or to the terms of the said contract or in or to the Construction Drawings or specifications therefore shall in anywise affect the obligation of said surety on its bond.

This bond will remain in full force and effect for an additional year after the date of acceptance of the Work and liquidation of the contract.

SIGNED, SEALED AND DELIVERED This _____ day of _____, _____.

PRINCIPAL:
Firm Name: _____
By (Typed Name):_____,
Authorized Representative
Address: _____
_____
Signature:_____
Date: _____
Seal

SURETY:
Firm Name: _____
By (Typed Name):_____,
Title _____
Address: _____
_____
Signature:_____
Date: _____
Seal

SURETY:
Firm Name:_____
By (Typed Name):_____,
Authorized Representative
Address: _____
_____
Signature:_____
Date: _____
Seal

Note: Date of BOND must not be prior to date of Contract. If Contractor is partnership, all partners should execute BOND.
IMPORTANT: Surety companies executing BONDS must appear on the Treasury Department's most current List (Circular 570 as amended) and be authorized to transact business in the state where the Project is located.

3. HOLD HARMLESS AGREEMENT

Project: _____
(Project Description)

_____ _____ _____
(CIP NUMBER) (Federal Funding Agency: EPA, FEMA, RD, PWS or N/A) (Funding Agency Number)

located at _____

_____, _____, Puerto Rico.
(Ward) (City)

Contractor and its insurer shall save harmless the Puerto Rico Aqueduct and Sewer Authority from and against any and all claims, demands, suits including also any claim or demand for any infringement of any patent or the use of any secret process in connection with the performance of the contract hereinunder referred to (including expenses of suits, whether groundless or not); judgments or awards which may be made, brought or recovered against PRASA for or on account of, or arising out of, any act, happening, event or cause in connection with the above mentioned project, whether or not such claims, demands, or suits arise out of the alleged negligence, active, passive or statutory of the Puerto Rico Aqueduct and Sewer Authority or the negligence, active, passive or statutory of Contractor and they, Contractor and its insurer, shall appear in Court on behalf of the Puerto Rico Aqueduct and Sewer Authority.

INSURANCE COMPANY: Firm Name:_____ _____ By (Typed Name): _____ Title _____ Signature:_____ Date: _____ Seal	CONTRACTOR: Firm Name:_____ _____ By (Typed Name): _____ Title _____ Signature:_____ Date: _____ Seal

4. RELEASE OF DEBT (RELEVO DE DEUDA)

I,
Yo, _____

Supplier (Subcontractor) to
Suplidor (subcontratista) a _____

In Project No.
En el Proyecto No. _____

Of (title)
De (título) _____

hereby release the Puerto Rico Aqueduct and Sewer Authority of all responsibility for-payment
por esta relevo a la Autoridad de Acueductos y Alcantarillados de toda responsabilidad de pago

for supplies (certified work) as consigned on invoice (Subcontractor's certification) No. _____
por materiales (trabajos certificados) según consignado en factura (certificación subcontratista) Num. _____

Dated
De fecha _____

For a value of
Por un valor de _____

In this day
En _____, este día _____.

_____

CORPORATE SEAL
SELLO

AUTHORIZED SIGNATURE
FIRMA AUTORIZADA

5. FORMULARIO REPRESENTATIVO DEL AVISO DE EXCAVACIÓN

_____
Número de Control

GOBIERNO DE PUERTO RICO
COMISIÓN DE SERVICIO PÚBLICO
OFICINA PARA LA COORDINACIÓN DE
TRABAJOS DE EXCAVACIÓN

AVISO DE EXCAVACIÓN

Fecha ____/____/____
mes día año

Recibido vía:
[ ] Fax [ ] Teléfono
[ ] Personalmente

Hora: _____ [ ] AM [ ] PM

Favor de cumplimentar en su totalidad la siguiente información:

INFORMACIÓN DEL EXCAVADOR

Nombre de la Compañía: _____
Teléfono de la Oficina: _____ Celular _____
Teléfono de Campo de Trabajo ("field") _____ Beeper _____

Nombre del Representante Autorizado _____
Fax: _____
Dirección Posta: _____
Pueblo _____ Zip Code _____

INFORMACIÓN SOBRE LA EXCAVACIÓN

Lugar exacto de la excavación:

Zona Rural
Barrio _____ Sector _____ Carr. _____
Kilómetro _____ Hectómetro _____ Pueblo _____

Zona Urbana
Urbanización _____ Calle _____
Bloque _____ Número _____ Pueblo _____

Referencias Disponibles (favor de detallar e indicar puntos de referencia que incluyan calles aledañas, semáforos, intersecciones, comercios, instituciones, entre otros.)
_____
_____
_____

Fecha de comienzo de la excavación: _____
Tiempo que durará la excavación: _____
Tipo de Maquinaria: _____
¿Utilizará explosivos? Si [ ] No [ ] Tipo de Explosivo _____

VEA AL DORSO

Razón para la excavación: _____

Breve descripción del trabajo: (Profundidad y Tamaño de la excavación en pies o pulgadas) _____
_____
_____
_____
_____

PARA USO EXCLUSIVO DE LA OFICINA PARA LA COORDINACIÓN DE TRABAJOS DE EXCAVACIÓN

For information only-

Entidades notificadas:
[ ] PRTC [ ] AEE [ ] AAA [ ] DTOP (ACT)
[ ] OTROS _____

Se recibirán notificaciones de aviso de excavación de lunes a viernes de 7:00 a.m. a 5:00 p.m. (excepto días feriados y fines de semana).

En caso de emergencia se aceptarán notificaciones los siete (7) días a la semana, 24 horas al día.

El excavador tiene la obligación de notificar a la Oficina para la Coordinación de Trabajos de Excavación con tres (3) días laborables de anticipación para comenzar las excavaciones.

La Oficina para la Coordinación de Trabajos de Excavación notificará a los dueños de las utilidades la excavación en un término no mayor de tres horas de recibida.

Teléfonos de la Oficina para la Coordinación de Trabajos de Excavación (24 horas al día, 7 días a la semana).

Teléfono Oficina a llamar área metropolitana 764-4900
Números de Fax 753-4900 ó 763-4[illegible]

Nombre del funcionario que tomó la información del excavador:
_____ Firma: _____
Nombre Apellidos

Nombre del funcionario que tramitó el aviso de excavación:
_____ Firma: _____
Nombre Apellidos

Documentos que se anejan en este formulario: _____
_____
_____
_____
_____
_____
_____

For information only-

Note: This is not a PRASA form. It is included for information purposes.
Contractor shall obtain form from the Comisión de Servicio Público.

6. FORMULARIO REPRESENTATIVO DE DOCUMENTOS A SOMETERSE CON LA SOLICITUD DE PERMISO CES E INFORMACION GENERAL

FORMA CES-002

GOBIERNO DE PUERTO RICO / OFICINA DEL GOBERNADOR
JUNTA DE CALIDAD AMBIENTAL / AREA DE CALIDAD DE AGUA

Junta de Calidad Ambiental

CES - _____ - _____ - _____
PARA USO OFICIAL

		Sometido por el Proyectista	Recibido por la JCA
1.	Mapa de localización que incluya los límites de la propiedad.	☐	☐
2.	Plano Topográfico en escala de 1 en 20,000.	☐	☐
3.	Identificación de accesos o vías públicas desde o hacia el lugar del proyecto.	☐	☐
4.	Estudios de Suelos (si aplica).	☐	☐
5.	Plan de Trabajo que incluya:	☐	☐
	a) Itinerario de Actividades.	☐	☐
	b) Fecha de informe inicial sobre implantación de Plan CES.	☐	☐
	c) Itinerario instalación de medidas de control.	☐	☐
6.	Certificación de Documento Ambiental (Evidencia de haber cumplido con el Artículo [illegible] de la Ley de Política Pública Ambiental, Ley número 9 del 18 de junio de 1970, según enmendada).	☐	☐
7.	Evidencia de pago de cuotas de radicación (Forma CES-003).	☐	☐
8.	Certificación del Inspector Designado (Forma CES-004 firmada y sellada en original).	☐	☐
9.	Certificación de Ingenieros o Arquitectos, distintos al proyectista, que hayan desarrollado o preparado cualquier documento que acompañe esta solicitud (Forma CES-005 firmada y sellada en original).	☐	☐
10.	Certificación de que el lugar de disposición de componentes de la corteza terrestre fuera del proyecto tiene Permiso CES vigente (Forma CES-006).	☐	☐
11.	Evidencia de que el proyectista y otros profesionales que certifiquen planos y documentos están al día en sus cuotas de colegiación.	☐	☐
12.	PLAN CES (firmado y sellado en original) que incluya:	☐	☐
	a) Localización de sistemas y áreas de drenaje y cálculos de escorrentía.	☐	☐
	b) Localización y representación gráfica de las áreas afectadas.	☐	☐
	c) Identificación del lugar donde se almacenarán o dispondrán los componentes de la corteza terrestre.	☐	☐
	d) Descripción de medidas de control provisionales y permanentes, incluyendo diseño, especificaciones e itinerario de mantenimiento.	☐	☐
	e) Descripción de actividades de forestación y áreas de vegetación existentes que no serán alteradas.	☐	☐
	f) Localización y representación gráfica del patrón de drenaje final propuesto incluyendo topografía y cuerpos de agua.	☐	☐
	g) Plano de Nivelación.	☐	☐
	h) Estimado de costos de Implantación y Mantenimiento.	☐	☐
	i) Descripción de medidas no incluídas en el "Manual de Mejores Prácticas y Especificaciones para el Control de la Erosión para Prevenir la Sedimentación".	☐	☐
13.	Otros documentos:		
	a) Resolución de la Agencia Originadora.	☐	☐
	b) Memorial Explicativo.	☐	☐
	c) Carta de autorización del dueño.	☐	☐
	d) Certificación de que aún no se ha subastado o contratado la construcción del proyecto.	☐	☐

For information only-

Note: This is not a PRASA form. It is included for information purposes.

CES-____-____-_____

Información General
(Deberá completarse en letra de molde o impresa)

A. Nombre del Dueño _____ Seguro Social _____-____-_____

Dirección Física _____
(Calle o Carretera) (Num. O Km.)

(Barrio) (Pueblo)
Dirección Postal _____

(Pueblo) (Zip code)
Teléfonos: Residencial (____)_____-_____ Oficina (____)_____-_____ Ext. _____
Otros: _____

B. Nombre del Proyectista _____ Seguro Social _____-____-_____

Dirección Física _____
(Calle o Carretera) (Num. O Km.)

(Barrio) (Pueblo)
Dirección Postal _____

(Pueblo) (Zip code)
Teléfonos: Residencial (____)_____-_____ Oficina (____)_____-_____ Ext. _____
Otros: _____

C. Nombre de la Constructora _____

Dirección Física _____
(Calle o Carretera) (Num. O Km.)

(Barrio) (Pueblo)
Dirección Postal _____

(Pueblo) (Zip code)
Teléfonos: Residencial (____)_____-_____ Oficina (____)_____-_____ Ext. _____
Otros: _____

D. Nombre del Proyectista _____ Seguro Social _____-____-_____

Dirección Física _____
(Calle o Carretera) (Num. O Km.)

(Barrio) (Pueblo)
Dirección Postal _____

(Pueblo) (Zip code)
Teléfonos: Residencial (____)_____-_____ Oficina (____)_____-_____ Ext. _____
Otros: _____

Sometido por: _____ Fecha: _____
Proyectista

Note: This is not a PRASA form. It is included for information purposes.

For information only

7. FORMULARIOS REPRESENTATIVOS DEL REGISTRO ÚNICO DE LICITADORES

ASG-432
Registro Unico de Licitadores
Rev. Octubre 2002

ESTADO LIBRE ASOCIADO DE PUERTO RICO
Commonwealth of Puerto Rico
ADMINISTRACION DE SERVICIOS GENERALES
General Servise Administration
PROGRAMA DE COMPRAS, SERVICIOS Y SUMINISTROS
Parchase, Services, Supply Program
P.O. Box 7426, San Juan, Puerto Rico –016-7428

Número de Licitador
Bidder's No.

(Pasa uso de ASG)

SOLICITUD PARA INGRESO AL REGISTRO UNICO DE LICITADORES

Nombre del Solicitante: Name of Applicant:	☐ Negocio Individual / Individual Business ☐ Sociedad / Partnership
Nombre Comercial o haciendo negocio como: Comercial name or doing business at:	☐ Corporación / Corporation ☐ Corporación Foranea / Foreing Corporation
Número de Seguro Social Patronal: Federal Indentification Number:	Fecha que se estableció o incorporó: Date established or date of incorporation:
Números de Teléfono: Telephone Numbres: / Número de Fax: Fax Numbres:	Nombre, título y dirección física de Miembros de la Junta de Directores y Oficiales Principales: / Name and title of principal officer and their address including street, city, state and zip code.
Correo Electrónico: E-mail:	1.
Dirección Postal: Postal Address:	2.
Dirección Física, oficina principales: Main Office (street, city, state, zip code):	3.
De estar acogido a los beneficios de la Ley 42 del 5 de agosto de 1989, conocida como: Ley de Preferencia par alas compras del Gobierno, indique: Desde: Hasta: %	Nombre y dirección física del Agente Residente: Name, Address and telephone of the Resident Agent in Puerto Rico:

Nombres, títulos y firmas de personas autorizadas a firmar oferta. / Name, Title and Signature of persons authorized to sign bids.

Nombre/Name	Título/Title	Firma / Signatura
Nombre/Name	Título/Title	Firma / Signatura
Nombre/Name	Título/Title	Firma / Signatura

Certifico correcta la información aquí suministrada.
I certify the above information is correct.

_____ Fecha de esta solicitud / Date of this Application

_____ Firma Autorizada / Authorized Signature

For information only. Contractor shall obtain form from the Comisión de Servicio Público

NOTA: TODOS LOS BLANCOS DEBERAN SER CUMPLIMENTADOS ANTES DE SOMETER LA SOLICITUD.
NOTE: ALL BLANKS MUST BE FILLED BEFORE SUBMITTING THE APPLICATION.

Note: This is not a PRASA form. It is included for information purposes.

REQUISITOS PARA INGRESAR AL REGISTROO UNICO DE LICITADORES
REQUIREMENTS FOT ADMISSION TO THE SOLE BIDDER'S REGISTRY
Requirements only for Foreing Corporation

1. Cuota Annual: Efectivo, Gito Postal o Bancario o Cheque Certificado a nombre del Secretario de Hacienda.
Payment of the Annual Fee: Cash, Money Order or certified check made out to the Secretary of the Treasury.

VENCIMIENTO /EXPIRES ON

$450.00 – Corporación / Corporation
$350.00 – Individuo y/o Sociedad Especial / Individuals

2. Pagos Municipales

VENCIMIENTO /EXPIRES ON

Copia de Patente Municipal o recibo de Pago.
CRIM Certificación de Radicación de Planillas Propiedad Mueble
- CRIM Certificación de Deuda de Propiedad Mueble
- CRIM Certificación de Deuda Propiedad inmueble o certificación negativa de poseer Propiedad Inmueble

3. Departamento de Hacienda

VENCIMIENTO/EXPIRES ON

Certificaión de Radicació de Planillas de contribució sobre ingresos por los últimos cinco (5) años.
- Certificación de Deuda Contributiva (Modelo SC6096)

A sworn affidávit that there is no debt outstanding with the Commonwealth of Puerto Rico

4. Seguros

VENCIMIENTO /EXPIRES ON

Certificaión de Deuda de Fondo de Seguro del Estado.
- Certificación de Deuda del Fondo del Seguro del Estado.
- Certificación de Deuda del Departamento del Trabajo de Seguro de Incapacidad y Desempleo.
- Certificación de Deuda del Departamento del Trabajo de Seguro Social Choferil.

5. Otros Documentos

VENCIMIENTO /EXPIRES ON

Declaración Jurada (Affidávit) se le entregará modelo para ser juramentada (Ley 458)
Sworn Affidávit (correct format to be supplied by GSA).
Estado Financiero anual compilado si el negocio tiene ingresos de un millón de dólares o más debe estar certificado por un Contador Público Autorizado.
Una carta de referencia bancaria y comercial.
Copia de todo permiso, licencia y autorización necesaria para operar su negocio establecido po leyes especiales, ambientales, de salud u otras.

6. Requisitos para Corporaciones

VENCIMIENTO /EXPIRES ON

Copia de los artículos de incorporación. / ** Copy of the articles of corporation.
Copia de Certificado de Incorporación.
Certificado de Departamento de Estado que indica que están autorizados a efectuar negocios en Puerto Rico.
Certification from the Puerto Rico Department of State that the corporation is authorized to do business in Puerto Rico
Certificado de Cumplimiento con la Ley General de Corporaciones.
Good Stantdng Certificate from the Puerto Rico Department of State, regarding the submission of Annual Corporate Reports.
Resolución corporative autorizando a las personas que firmarán.

7. Requisitos para Individuos

VENCIMIENTO /EXPIRES ON

Declaración Jurada (Affidávit en Original) indicando que su negocio es individual y su spropósitos.
- Certificación de Deuda de la Administración para el Sustento de Menores (ASUME).

8. Requisitos para Sociedad Especial

VENCIMIENTO /EXPIRES ON

Copia del documento certificado por el Departamento de Hacienda que indique que es Sociedad Especial.
Copia de la Escritura de la Sociedad Especial.

De tener deuda con cualquier agencia del Estado Libre Asociado de Puerto Rico, deberá someter copia de plan de pago y evidencia de estar al día con el mismo.

For information only. Contractor shall obtain form from the Comisión de Servicio Público.

DECLARACION JURADA
[SWORN STATEMENT]
REGISTRO ÚNICO DE LICITADORES

Yo *[I]*_____, con número de seguro social *[with social security number]* _____, mayor de edad *[of legal age]*_____, y vecino de *[and resident of]* _____, bajo el más solemne Juramento *[Ander the most solemn oath]*,

DECLARO *[I hereby swear as follows]:*

1. Que mi nombre y demás circunstancias personales son las anteriormente expresadas. *[That my personnel circunmstances are as above stated.]*
2. Que ni el suscribiente, ni la corporación o sociedad especial que represento, ni ninguno de sus oficiales principales de la misma ha sido convicto o se ha declarado culpable en el foro estatal o federal, o en cualquier otra jurisdicció de los Estados Unidos de América de aquiellos delitos constitutivos de fraude, malversación o apropiación ilegal de fondos públicos enumerados en el Artículo 3 de la Ley 458 de 29 de diciembre de 2000, según enumerada la cual prohíbe adjudicar subastas o contratos gubernamentales a convictos por fraude, malversació o apropiación ilegal de fondos públicos. *[That neither the signer, nor the corporation, nor any special society that I may represent, nor any of its corporate officers has been convicted, nor has pleaded guilty at a state or federal ber, in any jurisdiction of the Unites States of America, of crimes consisting of fraud, embezzlement or misappropriation of public funds, as stated in Article 3 of Act 458 of December 29, 2000, as amended, which prohibits the adjudgement of auctions or govermernt contracts to those convicted of fraud, misapplication or misappropriation of public funds.]*
3. Que entiendo y acepto que la convicció o culpabilidad por cualquiera de los delitos enumerados en el Artículo 3 de la citada Ley conlleva, además de cualesquiera penalidades, la rescisión automática de todos los contratos vigentes a la fecha de tal convicción entre el suscribiente y cualesquiera agencia o instrumentalidades del Gobierno Estatal, Corporaciones Públicas, Municipios, Rama Legislativa o Rama Judicial. *[That I understand and accept that any guilty plea or convintion for any oth the crimes specified in Article 3 of said Act, will also result in the immediate cancellation of any contracts in force at the time of conviction, between the undersigned and whichever Government Agencies, Instrumentalities, Public Corporations, Municipalities and the Legislative or Judicial Branches]*.
4. Que suscribo esta declaración jurada de conformidad con lo establecido en el Artículo 6 de la Ley 458 de 29 de diciembre de 2000, según enmendada, ley que prohibe adjudicar subastas gubernamentales a convictos de fraude, malversación o apropiación ilegal de fondos públicos. *[That I subscribe this sworn statement in conformity with what is established in Article 6 of Act 458 of December 29, 2000, as ammended, which prohibits awarding bids for government contracts, to those convicted of fraud, embezzlement or misappropriation of public funds.]*
5. Que hago la presente declaración jurada para que las agencies gubernamentales tengan conocimiento de lo aquí declarado y para cualquier otro propósito administrativo y/o legal. *[That I make this sworn statement so that all Government Agencies may have knowledgeg of what is herewith declare and for any other admiinistrative and/or legal purpose that may be required.]*

Y PARA QUE ASI CONSTE, juro y firmo la rpesente delcaració en *[AND SO AS TO MAKE IT KNOWN, I herby swear and sign this statement in]* _____ a los *[on this]* _____ días del mes de *[days of]* _____ de _____.

_____
DECLARANTE *[DEPONENT]*

AFFIDAVIT NUMERO *[NUMBER]:* _____
JURADO Y SUSCRITO ante mí por *[SWORN AND SUBSCRIBED befote me by]* _____, de las circunstancias personales anteriormente mencionadas y a quien identifico mediante *[with the adoresaid personnel circumstances and whom I have identufied by jeans of a]* _____ en *[in]* _____, _____, hoy *[on this]* _____ días del mes de *[days of]* _____ de _____.

_____
NOTARIO PUBLICO *[NOTARY PUBLIC]*

For information only, Contractor shall obtain form from ASG.

8. FORMULARIO REPRESENTATIVO DE PERMISO CORTE DEL DTOP

ESTADO LIBRE ASOCIADO DE PUERTO RICO
DEPARTAMENTO DE TRANSPORTACIÓN Y OBRAS PUBÚCAS
PROGRAMA DE CONS ERVACIÓN DE CARRETERAS
Oficina Regional de _____
OTORGACION DE PERMISO

Permiso # _____
Fecha _____

Permiso otorgado por el Secretario de Transportación y Obras Públicas o su representante autorizado a _____ con dirección en e instalar _____ para practicar un corte e instalar tubería y/o otros conductos soterrados dentro de la servidumbre de paso de la(s) carretera(s) que se menciona(n) a continuación con el propósito de _____
_____
_____
_____

Carretera PR-_____, km. _____ a km. _____
Carretera PR-_____, km. _____ a km. _____
Carretera PR-_____, km. _____ a km. _____

En la ejecución de los trabajos autorizados por este permiso deberán cumplirse las siguientes condiciones:

1. El trabajo se ejecutará con sujeción a los planos presentados y aprobados por este Departamento.

2. Los trabajos autorizados por este permiso deberán comenzarse dentro del término de _____ a partir de la fecha de concesión y una vez comenzados deberán continuar sin interrupción hasta terminarse. Se concederá un plazo máximo de _____ días para la ejecución de estos trabajos y una vez vencido este plazo queda sin efecto la presente autorización, salvo que se extienda prórroga previa solicitud al efecto.

3. El concesario deberá notificar al Director Regional de ese Departamento, por lo menos con cinco (5) días de anticipación, la fecha de comienzo de los trabajos al efecto de poder coordinar la correspondiente inspección de los mismos.

4. Durante las operaciones de construcción del tendido de los conductos soterrados y/o de la planta soterrada se instalarán aquellas señales que sean necesarias para el buen funcionamiento del tránsito. El concesionario o contratista deberá proveer e instalar las señales y barreras Clase I, grillas y otros artefactos de iluminación en horas de la noche, señales de precaución y otras barreras protectoras, además del uso de abanderados durante las horas diurnas mientras dure la construcción del proyecto, agentes policiacos, si fuera necesario etc., según especificado en la Parte V del nuevo Manual de Dispositivos Uniformes de Control de Tránsito para Calles y Carreteras, publicado por la Asociación Americana de Funcionarios Oficiales de Carreteras Estatales (AASHO).

For information only. Contractor shall obtain form from the DTOP.

5. No se removerá ningún dispositivo existente de control de tránsito (señales), etc sin la previa autorización del Director Regional y de ser necesario remover alguno provisionalmente, el mismo deber ser reinstalado y/o reemplazado por uno nuevo a la brevedad posible en el mismo sitio y condiciones iguales al anterior removido o destruido originalmente.

6. En todos los casos donde sea posible los conductos soterrados se localizarán fuera del pavimento de rodaje y de los paseos, aprovechando el espacio existente más próximo al límite de servidumbre. En casos especiales donde sea imprescindible utilizar el paseo o el pavimento para instalar los conductos, deberá entonces discutirse el caso específicamente con el Director Regional o su representante autorizado para decidir lo que sea más conveniente.

7. El límite de longitud, anchura y profundidad de los tramos de las excavaciones será establecido por el Director Regional, luego de considerar las condiciones individuales del sector donde se están llevando a cabo las operaciones del tendido referido con relació a la fluidez y continuidad del tránsito, accesos a negocios particulares, cruce de peatones, etc. Dichos límites podrán variarse de acuerdo con las condiciones apreciadas.

8. Para no permitir el apozamiento de las aguas pluviales y evitar accidentes en el transcurso del la noche la excavación en cortes longitudinales, se hará en un tramo de tal longitud que permita instalrse la tubería y a apisonar el terreno al suspender los trabajos por la tarde, no será permitido colocar vallas ni dejar obstáculos en la zona de la carretera una vez levantados los trabajos. Se seguirá una alineación lo más recta posible, sin curvas innecesarias y manteniendo el mismo ancho en toda su extensión.

9. Si por fuerza mayor se descontinúa la labor por un número determinado de horas en los trabajos de cortes al pavimento o excavación de trincheras, se procederá a cubrir las áreas abiertas con planchas de acero (tolas) de ocho a diez pies de largo y un grueso de una pulgada, con el fin de permitir el libre tránsito de vehículos por la vía pública.

10. En carreteras primarias y secundarias que puedan convertirse en futuras avenidas o vías arteriales de importancia las tuberías o conductos soterrados tendrán una profundidad mínima de 4’-0” bajo el nivel del pavimiento o paseo y sobre el tope del mismo. En las demás carreteras dicha profundidad podrá ser de 2’6”. La profundidad mínima bajo aceras, cajas de siembras, isletas separadas o cunetas será de 2’-0”.

11. Al hacer el corte, el concesionario tendrá especial cuidado de no causar daños a cualquier cable de las Fuerzas Armadas que esté tendido en el tramo de la carretera. De cualquier daño que sufra este cable por el corte que se haga en la carretera será responsable el concesionario.

12. No se permitirá realizar cortes en la carretera durante las horas de mayor afluencia de tránsito, por lo cual se utilizarán las horas de labor según lo determine el Director Regional.

13. Cualquier corte transversal a través de la carretera afectado y que fuera imprescindible realizar para el cruce de la planta soterrada se hará en horas diurnas o de la noche según indicado en las condiciones generales o enmendada en las especiales de este permiso, y/o según determinado por el Director Regional. Los mismos se realizarán en dos o más etapas, permitiéndole la circulación del tránsito por la otra mitad del pavimento de rodaje mientras se trabaja en el lado opuesto.

For information only. Contractor shall obtain form from the DTOP.

14. Los vehículos, equipo, maquinaria, que no estén en uso inmediato deberán estar estacionados y ubicados en todo momento en sitios donde no se interrumpa elfluir del tránsito.

15. No deberá depositarse tubería o cualquier material a usarse en la ejecuciónd e las obras a lo largo de los paseos y/o cunetas de la carretera. Los mismos deberán ser depositados fuera de la servidumbre de la carretera.

16. Bajo ninguna circunstancia se permitirá limitar, reducir, obstruir o en alguna forma alterar la circulación peatonal a lo largo de las aceras o paseos disponibles frente al proyecto, debiéndose mantener estas áreas completamente limpias y en condiciones adeucadas para el uso de peatones.

17. En la zona metropolitana, carreteras expreso, ciertas avenidas urbanas, vias arteriales y en otras carreteras de intenso tránsito vehicular, los trabajos de excavación que haya que ejecutarse en cualquier parte del área de rodaje de la carretera deberán llevarse a cabo exclusivamente durante el periodo comprendido entre las _____ AM / PM y las _____ AM / PM si los mismos no han sido terminados antes de las _____A.M./P.M. es obligación del concesionario dejar la zanja completamente tapada, el terreno apisonado y el tramo libre para el tránsito, repitiendo este procedimiento hasta la terminación del trabajo. Cualquier solicitud de cambio en el horario para los trabajos objeto de este permiso, se coordinará directamente con la Oficina del Director Regional.

18. Se realizarán pruebas de ensayo para determinar la localización de posibles obstáculos en las excavaciones antes de proceder finalmente con las mismas a todo lo largo de las alineaciones propuestas.

19. El concesionario deberá investigar con las distintas agencias del servicio público y privadas la localización de las instalaciones soterradas existentes para evitar daño a las mismas.

20. El tendido de los conductos soterrados referidos estará sujeto y se realizará de acuerdo con las normas, requisitos y/o código de la Asociación Americana de Oficiales de Carreteras Estatales (AASHO) por sus siglas en inglés) aplicables al caso.

21. Las trincheras de profundidad mayor de cuatro pies se protegerán adecuadamente con tablaestacado y travesaños o durmientes según requerido y de acuerdo con las normas, reglamentos de las agencias a cargo de velar por la seguridad y condiciones de trabajo de los obreros.

22. Durante la construcción de los registros en las aceras o adyacentes al pavimento de rodaje, cuando se utilicen tablestacados para proteger las excavaciones, se procederá a cortar el mismo al nivel de la acera o pavimento y se cubrirá la trinchera con los paneles de “Plywood” o planchas de acero (tolas) respectivamente, según esea requerido por el Director Regional.

23. Los registros de inspección y conductos de hormigón que se propongan como parte de la planta soterrada se construirán siguiendolas especificaciones gubernamentales para los mismos con relación a la seguridad, resistencia a fuerzas laterales, diseño, capacidad, etc.

24. El producto de las excavaciones será removido de la zona de la carretera y en ningún momento será depositado en los paseos o en las cunetas.

For information only. Contractor shall obtain form from the DTOP.

25. No se permitirá realizar trabajo alguno dentro del derecho de via de la carretera cuando el tiempo esté lluvioso.

26. En los casos de acometidas de agua o alcantarillado la parte superior del tubo quedará alojada a una profundidad no menor de cuarenta y cinco (45) centímetros por debajo de la rasante de la superficie de rodaje.

27 Para el relleno de la zanja en el área de rodaje o paseo, se utilizará el material proveniente de la excavación si está seco y es de buena calidad o en su defecto se usará material selecto de acuerdo con las especificaciones del Departamento debiendo ser bien compactado.

28. El pavimento flexible para la reparación de los tramos asfálticos de las carreteras afectadas consistirá de una capa de seis (6) pulgadas de espesor (0.15 metros) de piedra triturada Clase I, Gradación A, hasta el tamaño 3" para la bae, una capa de cuatro (4) pulgadas de espesor (0.15 metros) de piedra triturada Clase I, Gradación A, hasta el tamaño 1 1/2" para la superficie, conforme a las especificaciones del Departamento de Transportación y Obras Públicas para estos materiales. Para la superficie de rodaje se usará un tipo de pavimento igual o superior al existente con un declive lateral no mayor de dos (2) por ciento.

29. El pavimento rígido para la reparación de carriles de tránsito en hormigón que por cualquier circunstancia pudieran ser demolidos durante la construcción de las obras referidas consistirá de una capa compactada de 0.125 metros de espesor (5") de grava Clase I, Gradación A, para la base, una capa de 0.025 metro de espesor (1") de arena y un pavimento de 0.20 metros (8") de espesor de hormigón Clase A, de resistencia a la compresión no menor de 3,000 libras por pulgada cuadrada, con un declive lateral no mayor de uno (1) por ciento.

30. El pavimento rígido para la reparación de calles marginales y bocacalles en hormigón que por cualquier circunstancia pudieran ser demolidos durante la construcción de las obras referidas consistirá de una capa compactada de 0.125 metros (2") de arena y un pavimento de 0.175 metro (7") de espesor de hormigón Clase A, de resistencia a la compresión no menor de 3,000 libras por pulgada cuadrada, con un declive lateral no mayor de uno (1) por ciento.

31. El hormigón a depositarse en los encintados, sardineles, badenes, aceras y muros protectores será Clase A, de resistencia a la compresión no menor de 3,000 libras por pulgada cuadrada.

32. Cuando los cortes de las aceras existentes tuvieran un ancho menor de un metro, estos se realizarán con sierra circular mecánica especial para ese uso, manteniendo una alineación lo más recta posible y un ancho uniforme. Cuando los cortes de las aceras tuvieran un ancho mayor de un metro, las aceras se repondrán en paños completos.

33. En caso de que no se termine la labor de reponder el hormigón en las aceras para ponerlas en uso durante las horas diurnas, se procederá a cubrir las mismas con paneles de "Plywood" de (4 por 6 pies) grueso no menor de ¾ pulgadas, de manera que se permita el paso de peatones con seguridad y se evite la erosión del suelo.

For information only. Contractor shall obtain form from the DTOP.

34. Cuando los paseos, firme y asfaltado sean afectados por el tendido de la planta soterrada, los mismos se repondrán en su forma original, dejándolos en igual o mejor condición que la existente. Siendo este el punto más importante de esta concesión esta Oficina exigirá el trabajo de reposición de alta calidad o de lo contrario este Departamento ejecutará el trabajo y el concesionario tendrá que pagar por todos los gastos incurridos.

35. La rasante del firme de la carretera no podrá ser alterada bajo ninuguna circunstancia.

36. En los curces de la planta soterrada en o cerca de obras de desague de la carretera se tomarán las medidas de seguridad que sean necesarias para garantizar la estabilidad de lsa fundaciones y sus alrededores, utilizándose para ello tablestacado hincado a la profundidad requerida si así se hiciere necesario o conveniente de a acuerdo con lo determinado por el Director Regional.

37. En caso de que la alineación del tendido prouesto en los alrededores de la carretera afectada cruce de terrenos de baja consistencia y capacidad para soportar el peso de la misma, se proveerá un sistema de soporte para dicha planta ya sea sobre pilotillos, durmientes o sobre una base de hormigón.

38. Todo el trabajo dentro del derecho de vía de la carretera afectada se hrá de acuerdo con las normas del Departamento de Tranportación y Obras Públicxas y estará sujeto a las recomendaciones, supervisión y aceptación del Director Regional o su representante autorizado.

39. El concesionario será responsable de remover y/o relocalizar dicha planta soterrada si en algún momento interfiere con el ensanche futuro de la carretera afectada.

40. El concesionario deberá coordinar con los dueños o administradores de los establecimientos comerciales afectados, el cierre temprano de sus accesos para el cruce del tendido de los conductos soterrados a través de los mismos. Los trabajos en dichos accesos deberán realizarse en el periodo mínimo de tiempo posible de manera que se eviten molestias o inconvenientes innecesarios para las operaciones de dichos establecimientos.

41. No se permitirá el corte transversal del pavimento de rodaje de ciertas avenidas urbanas, carreteras expreso, vias arteriales, ciertas carreteras primarias y secundarias, etc. según determinado por el Departamento. El cruce de los conductos soterrados propuestos a través de la carretera afectada se efectuará mediante la construcción de un túnel de hormigón o acero, en secciones o tramos, de diámetros adecuados utilizándose el método de tendido a presión (Jacking Methods) u otro similar que garantice la estabilidad del pavimento y terraplén de la carretera.

42. En caso de cruces de conductos soterrados propuestos en futuras avenidas y carreteras expreso, vías arteriales o primarias, los mismos se tenderán en el ancho total de la sección típica requerida para le vía pública afectada, por una tubería protectora de hormigón o acero de diámetro adecuado y no menor de 12”D, “gauge Nº. 12, bolock steel” igual o similar, para permitir su reparación y mantenimiento en el futuro sin necesidad de demoler los pavimentos de rodaje de la carretera.

43. En el caso anterior la profundidad mínima para el tubo protector de hormigón o acero será de 4’-0” bajo el nivel del pavimento y sobre el tope del mismo.

For information only. Contractor shall obtain form from the DTOP.

44. En caso de ser necesario la remoción de la verja que limita la servidumbre de la carretera la misma será repuesta en el mismo lugar tan pronto se termine el trabajo.

45. El concesionario vendrá obligado a relocalizar por su cuenta cualquier poste de línea de energía eléctrica, del teléfono, telégrafo u otras que pudieran interferir en el trabajo propuesto para lo cual deberá comunicarse con la agencia o compañía correspondiente.

46. La ejecución total o parcial del trabajo autorizado por este permiso será considerada como una aceptación de todas las condiciones estipuladas.

47. El Director Regional o su representante ejercerá inspección sobre los trabajos autorizados por el presente permiso y dictará las disposiciones que crea conveniente para el buen cumplimiento de la ejecución de este permiso.

48. Este permiso deberá ser presentado a cualquier empleado de este Departamento que lo exija en el sitio de trabajo.

49. El concesionario deberá avisar al Director Regional jdel Departamento la fecha de terminación de los trabajos a los efectos de realizar la inspección correspondiente.

50. La responsabilidad en el aspecto de la conservación en los sitios donde se realicen las excavaciones autorizadas por este permiso, se extenderá por un periodo de cuatro (4) meses después de terminado el trabajo y haber sido aceptado por este Departamento, el cual empezará a contar desde la fecha de aceptación. Cualquier desperfecto que ocurra en el firme y/o pavimento durante este periodo de observación, salvo desperfectos causados por fuerza mayor, el concesionario tendrá la obligación de corregirlo o en caso contrario este Departamento ejecutará el trabajo con cargo al susodicho concesionario.

51. Queda entendido que este Departamento no se hace responsable de los daños que pueda sufrir la tubería que en virtud de est permiso sea colocada dentro de la zona de la carretera a causa de las reparaciones que hagan en el futuro.

52. El concesionario o su representante o agente encargado de ejecutar el trabajo será responsable de cualquier daño a la vida o propiedad pública o privada causado por la ejecución del mismo, aún cuando este trabajo esté radicado dentro de la propiedad del Estado.

53. Este permiso se concede sin perjuicio de tercero y dejando a salvo el derecho de propiedad.

54. Este permiso es personal e intransferible y el concesionario no podrá traspasarlo a persona alguna sin el consentimiento previo, por escrito, del Secretario de Transportación y Obras Públicas, o su representante autorizado.

55. Este permiso no concede al concesionario derecho alguno de propiedad ni en concepto de servidumbre y podrá ser revocado o enmendado en cualquier momento y sin previo aviso por el Secretario de Transportación y Obras Públicas o su representante autorizado.

For information only. Contractor shall obtain form from the DTOP.

56. Este permiso quedará sin efecto si durante la vigencia delmsimo este Departamento, la Autoridad de Carreteras o cualquier otra agencia autorizada procede a realizar trabajos de repavimentación de dicha carretera.

57. El concesionario o contratista a cargo de la obra realizará la coordinación necesaria con los organismos correspondientes y obtendrá su autorización y permiso que fuere necesario para proveer desvíos al tránsito que fuere imprescindible realizar, si así se hiciere necesario llevar a cabo según determinado por el Director Regional. El contratista además, proveerá todo aditamento, material y equipo requerido durante cualquier eventualidad que surja como consecuencia de la construcción de la obra referida debido a dificultades en las operaciones por la complejidad de las misma o por causas imprevistas, ajenas a su voluntad y buena fe en la ejecución de la misma.

58. Cuando el concesionario sea una agencia, compañía, autoridad u organismo gubernamental, este no aceptará las obras construidas por sus contratistas particulares en la zona de las carreteras afectadas hasta tanto el Departamento de Transportación y Obras Públicas inspeccione y considere las mismas aceptables.

59. Cuando el concesionario sea un contratista particular esté deberá depositar una fianza por la cantidad de _____ a favor del Secretario de Hacienda para garantizar la completa y buena ejecución de los trabajos autorizados y el cumplimiento de las cláusulas del permiso otorgado.

60. El concesionario ha depositado una fianza por la cantidad de _____ ($_____) dólares en efectivo o cheque a favor del Secretario de hacienda, según el recibo Oficial # _____ fechada en _____ o mediante Bono # _____ de la Compañía de Seguros _____ fechado el _____.

61. En caso de que los trabajos no sean realizados conforme al permiso otorgado al efecto, el Director de la Oficina de Finanzas y Suministros de este Departamento dispondrá de la fianza prestada de acuerdo con la reglamentación promulgada por el Secretario de hacienda.

62. Disposiciones Especiales:

_____

_____

_____

For information only. Contractor shall obtain form from the DTOP.

ARTICLE 9. - EPA, FEMA OR HD AS THE FUNDING AGENCY

This Article applies when the Funding Agency is the Environmental Protection Agency, the Federal Emergency Management Agency and/or the Health Department.

1. Any contract or contracts awarded under this invitation for bids are expected to be funded in part by a grant from the U.S. Environmental Protection Agency, the Federal Emergency Management Agency or the Health Department. Neither the United States nor any of its departments, agencies or employees is or will be a party to this invitation for bids or any resulting contract.

2. Projects for the construction of treatment works under the Clean Water Act are subject to regulations contained in 40CFR35.936, 40CFR35.938 and 40CFR35.939.

3. Bidders shall be aware of the Instructions to Bidders on Equal Opportunity Requirements in Areas Outside of Hometown and Imposed Plan Areas.

   Bidders are advised that:

   a. Any contract or subcontract resulting from this invitation for bids is subject to Executive Order 11246; and

   b. By the submission of its bid, each Bidder acknowledges that he understands and agrees to be bounded by the Equal Opportunity requirements of EPA regulations, 40CFR Part 8, particularly 58.4(b) which shall be applicable throughout the performance of work under any contract awarded pursuant to this solicitation.

   c. If awarded the contract, it will similarly bind contractually each subcontractor. In implementation of the foregoing policies, each Bidder further understands and agrees that if awarded the contract, it must engage in affirmative action directed at promoting and insuring Equal Employment Opportunity in the workforce used under the contract and that it must require contractually the same effort of all subcontractors whose subcontracts exceed $100,000. The Bidder understands and agrees that "affirmative action"' as used herein shall constitute a good faith effort to achieve and maintain minority employment in each trade in the on-site workforce used on the project.

   Bidders are requested to submit with their bids:

   a. An executed certificate as to non-segregated facilities in accordance with the attached form; and

   b. An executed certificate as to prior participation in contracts subject to E.0. 11246 in accordance with the attached form.

4. Projects funded by U.S. EPA are subject to the regulations contained in the Non-Hometown Plan Areas.

   The following statement must be part of the bid instructions:

EEO Clause

By the submission of its bid, each bidder acknowledges that he understands and agrees to be bound by the Equal Opportunity requirements of EPA regulations (40 CFR Part 8, particularly Section 8.4 (b) which shall be applicable throughout the performance of work under any contract awarded pursuant to this solicitation. Each bidder agrees that if awarded a contract, it will similarly bind contractually each subcontractor. In implementation of the foregoing policies, each bidder further understands and agrees that if awarded a contract, it must engage in affirmative action directed at promoting and insuring Equal Employment Opportunity in the work force used under the contract (and that it must require contractually the same effort of all subcontractors whose subcontracts exceed $100,000). The bidder understands and agrees that "affirmative action" as used herein shall constitute a good faith effort to achieve and maintain minority employment in each trade in the on-site work force used on the project.

Notification of Subcontractor

Each prime contractor and subcontractor shall include by reference the EEO Clause and applicable Bid Conditions in all advertisements or other solicitations for bids, and shall include the EEO Clause and applicable Bid Conditions in all contracts.

Each prime contractor and subcontractor must provide written notice to each subcontractor of the specific reporting and record-keeping requirements under the EEO Clause and applicable Bid Conditions. Upon award of a subcontract, each contractor shall immediately notify the Compliance Agency of the contract number, the subcontractor's name, dollar amount of contract, estimated start and completion dates, and the crafts, which will perform work under the subcontract.

5. A copy of the Federal Wage Rate Decision valid at the time of contract award. Copies of wage rate decisions and further guidance are available from the Construction Grants Branches, USEPA, Region II.

ARTICLE 10. - RURAL DEVELOPMENT AS THE FUNDING AGENCY

This Article applies when the Funding Agency is the Rural Development.

CONTRACTOR'S AFFIRMATIVE ACTION PLAN FOR EQUAL EMPLOYMENT OPPORTUNITY
UNITED STATES DEPARTMENT OF AGRICULTURE

CONTRACTOR´S AFFIRMATIVE ACTION PLAN FOR EQUAL EMPLOYMENT OPPORTUNITY UNDER EXCECUTIVE ORDER 11246 AND EXECUTIVE ORDER 11375

Employers of more than 50 persons who hold Government Contracts or sub-contracts of $50,000 or more are required to have at each installation a written program of affirmative action to assure that all employment and the conditions of employment at each installation are free of discrimination on account of race, color, religion, sex or national origin. As a minimum, and with such additions as are appropriate to the circumstances of the community and the capabilities of the contractor's facility, the following elements for an affirmative action equal employment opportunity plan are recommended:

1. Identify and analyze minority components of the labor pool available to the contractor facility. Determine the areas of unemployment and its causes. Sources of information are local Boards of Trade, Chamber of Commerce, U.S. Employment Service, minority group leaders, school authorities, and vocational services.

2. Analyze facility hiring activity for the past year, and maintain applicant and employee records to support findings. This includes examination of recruitment sources and qualifications requirements. Obtain certification of applicant and promotion test validation in accordance with Department of Labor Order of Sept. 24, 1968, (33F.R. 186) issued pursuant to Executive Order 11246.

3. Make job opportunity information equally available to minority group and non-minority group applicants.

4. Keep employment offices well marked and accessible to applicants, staffed where feasible with experienced interviewers.

5. Carefully adjust qualification requirements to needs of job. Do not inflate or set unrealistic standards. See that questions raised by applicants regarding eligibility are answered and that all are treated equally.

6. Assure equality of opportunity regardless of race in lines of progression and promotion ladder.

7. Provide for on-the-job and off-the-job training with safeguards against racial discrimination.

8. Calculate turnover, retirement, and replacement needs for appropriate periods in advance.

9. Set goals for the assignment of stated numbers of minority workers to the permanent work force.

10. Provide for recording progress on equal employment opportunity objectives.

11. Record contacts with public and private agencies and organizations serving minority groups.

12. Insure that the employer's equal employment opportunity policy is known to applicants as well as employees.

FORM AD-425(3-69)
AGPR (41CPR) 4-12.810

B.2 - GENERAL CONDITIONS

UNIFORM GENERAL CONDITIONS FOR PUBLIC WORKS CONTRACTS IN PUERTO RICO

DEPARTAMENTO DE TRANSPORTACIÓN Y OBRAS PÚBLICAS
DEPARTMENT OF TRANSPORTATION AND PUBLIC WORKS
GOBIERNO DE PUERTO RICO

DEPARTAMENTO DE ESTADO

Número: 7998
Fecha: 3 de marzo de 2011
Aprobado: Hon. Kenneth D. McClintock
Secretario de Estado

Por: Eduardo Arosemena Muñoz
Secretario Auxiliar de Servicios

UNIFORM GENERAL CONDITIONS

for

Public Works Contracts in Puerto Rico

PUERTO RICO VERDE

DEPARTAMENTO DE TRANSPORTACIÓN Y OBRAS PÚBLICAS
DEPARTMENT OF TRANSPORTATION AND PUBLIC WORKS
GOBIERNO DE PUERTO RICO

UNIFORM GENERAL CONDITIONS

for

Public Works Contracts in Puerto Rico

PUERTO RICO VERDE

CARRETERAS TRANSPORTE URBANO TRANSPORTE MARÍTIMO SERVICIOS

INDEX

PART A. INTRODUCTION

Article 1 - LEGAL BASIS; APPLICATION……1
1.1 Legal Basis
1.2 Application

PART B. UNIFORM GENERAL CONDITIONS

Article 1 - DEFINITIONS AND TERMINOLOGY……1
1.1 Defined Terms
1.2 Other Terms
1.3 Terminology

Article 2 – CONTRACT DOCUMENTS……10
2.1 Intent and Interpretation of Contract Documents
2.2 Order of Precedence of Contract Documents
2.3 Written Interpretations
2.4 Execution and Correlation
2.5 Review of Contract Documents and Field Conditions by Contractor
2.6 Amending and Supplementing Contract Documents
2.7 Copies Furnished, Ownership and Reuse of Documents

Article 3 – BONDS AND INSURANCE……13
3.1 General for Owners with OCIP
3.2 General for Owners without OCIP
3.3 Performance, Payment, and Other Bonds
3.4 Workmen's Compensation Insurance
3.5 Contractor's Liability Insurance
3.6 Business Auto Policy
3.7 Contract Work - Builders Risk Insurance
3.8 Installation Floater Policy
3.9 Subcontractor's and Sub-Subcontractor's Liability Insurance
3.10 Owner's Liability Insurance

Article 4 – SITE……20
4.1 Availability of Lands
4.2 Subsurface and Physical Conditions
4.3 Differing Subsurface or Physical Conditions
4.4 Price and Time Adjustments
4.5 Underground Facilities
4.6 Reference Points

4.7 Hazardous Environmental Condition at Site

Article 5 – OWNER……26
5.1 General
5.2 Information and Services Required of the Owner
5.3 Pay Promptly When Due
5.4 Owner's Right to Stop the Work
5.5 Owner's Right to Carry Out the Work Without Terminating the Employment of the Contractor
5.6 Owner's Right to Clean Up
5.7 Evidence of Financial Arrangements
5.8 Limitations on Owner's Responsibilities

Article 6 – CONTRACTOR……28
6.1 Supervision and Superintendence
6.2 Labor and Working Hours
6.3 Services, Materials, and Equipment
6.4 Progress and Other Schedules
6.5 Submittals for Approvals, Substitutes and or "Equals"
6.6 Review of Contract Documents
6.7 Patent, Fees and Royalties
6.8 Permits
6.9 Laws and Regulations
6.10 Taxes
6.11 Use of Site and Other Areas
6.12 Record Document
6.13 Safety and Protection
6.14 Safety Representative
6.15 Hazard Communication Programs
6.16 Plans and Working Drawings; As-Built Plans
6.17 As Built Record Drawings
6.18 Notice to Proceed
6.19 Contractor's General Warranty and Guarantee
6.20 Indemnification
6.21 Subcontractors, Suppliers and Others

Article 7 – ARCHITECT/ENGINEER AND DESIGNATED INSPECTOR……55
7.1 Administration of the Contract
7.2 Duties of Architect/Engineer and the Owner's Representative

Article 8 – OTHER WORK AND SEPARATE CONTRACTS……58
8.1 Owner's Right to Award Separate Contract, Perform Work with Owners Employees and Utility Workers. Related Work at Site
8.2 Owner's Right to Award Separate Contract
8.3 Mutual Responsibility of Contractors

Article 9 – TIME……62
9.1 Progress and Completion
9.2 Change of Contract Time
9.3 Delays and Extensions of Time

9.4 Delay Damages
9.5 Liquidated Damages
9.6 Early Completion Incentive

Article 10 – CHANGE OF CONTRACT PRICE, COST OF THE WORK AND UNIT PRICE WORK……67
10.1 Change of Contract Price
10.2 Cost of the Work
10.3 Cash Allowances
10.4 Unit Price Work
10.5 Contractor's Fee

Article 11 – CHANGES IN THE WORK……72
11.1 Authorized Changes in the Work
11.2 Unauthorized Changes in the Work
11.3 Execution of Change Orders and Extra Work Orders
11.4 Notification to Surety
11.5 Claims and Disputes

Article 12 – TESTS AND INSPECTIONS; CORRECTION, REMOVAL OR ACCEPTANCE OF DEFECTIVE WORK……74
12.1 Notice of Defects
12.2 Access to Work
12.3 Tests and Inspections
12.4 Uncovering Work
12.5 Correction or Removal of Deficient Work
12.6 Correction Period
12.7 Acceptance of Non-Compliant Work
12.8 Owner's Right to Correct Deficient Work

Article 13 – PAYMENTS AND COMPLETION……..79
13.1 Proposal Schedule and Schedule of Values
13.2 Progress Payments
13.3 Contractor's Warranty of Title
13.4 Substantial Completion
13.5 Partial Utilization
13.6 Final Inspection
13.7 Final Payment
13.8 Final Completion Delayed
13.9 Waiver of Claims
13.10 Unilateral Liquidation

Article 14 – PROTECTION OF PERSONS AND PROPERTY……..……90
14.1 Public Convenience and Safety
14.2 Laws to be Observed
14.3 Sanitary, Health and Safety Provisions
14.4 Labor Relations and Wages
14.5 Environmental Protection
14.6 Construction Over or Adjacent to Navigable Waters
14.7 Traffic Protection Devices

14.8 Use of Explosives
14.9 Protection and Restoration of Property
14.10 Forest Protection
14.11 Responsibility for Damage Claims
14.12 Contractor's Responsibility for Work
14.13 Emergencies

Article 15 – SUSPENSION OF WORK AND TERMINATION……...96
15.1 Suspension of Work
15.2 Owner May Terminate for Cause
15.3 Owner May Terminate the Contract For Convenience
15.4 Contractor's Right to Terminate the Contract

Article 16 – DISPUTE RESOLUTION……101
16.1 Disputes
16.2 Remedies
16.3 Mediation
16.4 Arbitration

Article 17 – MISCELLANEOUS……103
17.1 Governing Law
17.2 Federal Funds
17.3 Notice
17.4 Computation of Time
17.5 Ownership of Documents
17.6 Personal Liability of Public Officials
17.7 No Waiver of Legal Rights
17.8 Cumulative Remedies
17.9 Successors and Assigns
17.10 Survival of Obligations
17.11 Language
17.12 Amendments

PART C. ADDITIONAL PROVISIONS

ARTICLE 1: SEPARABILITY CLAUSE; EFFECTIVENESS……106

1.1 Separability Clause.
1.2 Effectiveness

UNIFORM GENERAL CONDITIONS FOR PUBLIC WORKS CONTRACTS

PART A. INTRODUCTION

ARTICLE 1 –LEGAL BASIS; APPLICATION

1.1 Legal Basis. The Secretary of Transportation and Public Works, in accordance with the powers conferred upon him by Law No. 198 of May 15, 1943, as amended by Law No. 131 of September 2, 2010 and Law No. 170 of August 12, 1988, as amended, hereby enacts the following regulations to establish the applicable legal framework for the contracting and management of all public works.

1.2. Application. The provisions of these Regulations shall be applicable to all contracts for public works executed by all government agencies, departments, public corporations and instrumentalities.

PART B. UNIFORM GENERAL CONDITIONS

ARTICLE 1 -DEFINITIONS AND TERMINOLOGY

1.1 Defined Terms

1.1.1 Wherever used in the Contract Documents and printed with initial capital letters, the terms listed below will have the meanings indicated which are applicable to both the singular and plural thereof.

1.1.1.1. Agreement (or Contract) - The written instrument, which is evidence of the agreement between Owner and Contractor covering the Work.

1.1.1.2. Application for Payment - The form acceptable to Owner which is to be used by Contractor during the course of the Work in requesting progress or final payment and which is to be accompanied by such supporting documentation as is required by the Contract Documents.

1.1.1.3. Architect/Engineer - The Architect or Engineer, referred herein as Architect/Engineer, is the professional licensed and collegiate to practice architecture or engineering in the Commonwealth of Puerto Rico and is referred to throughout the Contract Documents. It is the Architect or Engineer authorized by the Owner for the preparation of all construction documents, plans and specifications and to submit such documents for the approval of the related public agency. The Architect/Engineer may designate an authorized representative. The Architect/Engineer is the individual or entity named as such in the Agreement.

1.1.1.4. Architect/Engineer's Consultant - An individual or entity having a contract with the Architect/Engineer to furnish services as Architect/Engineer's independent professional and collegiate consultant with respect to the Project and who is identified as such in the Supplementary Conditions.

1.1.1.5. Bonds - Performance and Payment bonds and other instruments of surety required in the Contract Documents.

1.1.1.6. Certificate of Final Acceptance - Certificate issued by the Owner, or its duly authorized representative to Contractor indicating the date that the Work reached Final Acceptance.

1.1.1.7. Certificate of Substantial Completion - Certificate issued by the Owner, or its duly authorized representative, to the Contractor indicating the date that Substantial Completion was achieved for the Work.

1.1.1.8. Change in Law – Change in Law shall include: (i) the enactment or adoption by any legislative, regulatory, executive or administrative body of the Commonwealth of Puerto Rico or of the United States of America of any law, or any change or amendment to any law, in force as of the bid opening date, (ii) any change in the interpretation thereof which is final and not subject to administrative or judicial review, which cannot be complied with by a party without incurring in additional costs.

1.1.1.9. Change Order - A written order issued by the Owner, or its duly authorized representative, to the Contractor, signed by both parties, covering, additions, deletions, and/or revisions in the Work and/or an adjustment in the Contract Price and/or the Contract Time, if any, issued on or after the Effective Date of the Agreement. In Unit Price Contracts, a Change Order can also reflect a change in the number of items, as well as an increase or decrease, contained in the proposal. In Lump Sum Contracts, it reflects an order for additional or less work.

1.1.1.10. Claim - A claim is a demand or assertion by one of the parties seeking, as a matter of right, adjustment or interpretation of Contract terms, payment of money, extension of time or other relief with respect to the terms of the Contract. The term "Claim" also includes other disputes and matters in question between the Owner and Contractor arising out of or relating to the Contract. Claims must be made by written notice and in accordance with Article 11.5. The responsibility to substantiate Claims shall rest with the party making the Claim.

1.1.1.11. Commonwealth - The Commonwealth of Puerto Rico.

1.1.1.12. Construction Change Directive – A Construction Change Directive is a written order signed by the Owner, directing a change in the Work prior to agreement on adjustment, if any, in the Contract Price or Contract Time, or both. The Owner may, without invalidating the Contract, order changes in the Work within the general scope of the Contract consisting of additions, deletions or other revisions, the Contract Price and Contract Time adjusted accordingly. A Construction Change Directive shall be used only in the absence of total agreement on the terms of the Change Order, Extra Work Order or Work Change Directive, and shall be paid with the monthly Progress Payment according to the method indicated in Article 10.1.2.3.

1.1.1.13. Contract (or Agreement) - The entire and integrated written Agreement between the Owner and Contractor concerning the Work. The Contract supersedes prior negotiations, representations, or agreements, whether written or oral.

1.1.1.14. Contract Documents - The Contract Documents establish the rights and obligations of the parties and include: (i) the Agreement, (ii) addenda (which pertain to the Contract Documents), (iii) Contractor's bid or proposal (including documentation accompanying the Bid and any post Bid documentation submitted prior to the Notice of Award), (iv) the Notice to Proceed, (v) the Bonds, (vi) these General Conditions, (vii) the Supplementary Conditions, (viii) the Special Provisions, (ix) the Specifications, (x) the Drawings as the same are more specifically identified in the Agreement, including Standard Drawings, if applicable and (xi) Instructions to Bidders. It shall also include: (i) all Written Amendments, (ii) Change Orders and Extra Work Orders, (iii) Work Change Directives, (iv) Field Orders and (v) Architect/Engineer's written interpretations and clarifications issued on or after the Effective Date of the Agreement. Approved Shop Drawings and the reports and drawings of subsurface and physical conditions are not Contract Documents. Only printed or hard copies of the items listed in this Article are Contract Documents. Files in electronic media format of text, data, graphics, and the like that may be furnished by Owner to Contractor are not Contract Documents, unless otherwise specified in the bid documents.

1.1.1.15. Contract Item or Pay Item - A portion of Work specifically described and for which a price either unit or lump sum is provided. It includes the performance of all Work and the furnishing of labor, equipment and materials described in the Specifications.

1.1.1.16. Contract/Project Limits - The area, including Site and off-Site, within which the Work is to be performed.

1.1.1.17. Contract Price - See Contract Sum.

1.1.1.18. Contract Sum - It is the Contract Price as stated in the Agreement and is the total amount payable by the Owner to the Contractor for the performance of the Work under the Contract Documents subject to additions and deductions, stipulated in the Contract Documents.

1.1.1.19. Contract Time or Time - It is the period of time allotted in the Contract Documents for Substantial Completion of the Work.

1.1.1.20. Contract Unit - A major subdivision of the construction Project identified as such in the Contract Documents.

1.1.1.21. Contracting Officer - The Contracting Officer is the authorized representative of the Owner under the Contract Documents.

1.1.1.22. Contractor - The Contractor is the person or organization that contracts with the Owner for the performance of the Work described in the Contract Documents. The term Contractor, identified as such in the Agreement, means the Contractor or his authorized representative. In cases of Design-Build Contracts, the term Contractor shall also signify the Design-Builder Contractor.

1.1.1.23. Cost of the Work - See section 10.2 for definition.

1.1.1.24. Day - The word "day" shall constitute a calendar day of twenty-four (24) hours measured from midnight to the next midnight.

1.1.1.25. Design-Build Contracts – Shall be those contracts where the Contractor undertakes the duty to design the Work, in addition to performing the duties of Contractor.

1.1.1.26. Design-Builder Contractor – Shall be the Contractor in Design-Build Contracts, who in addition to having all duties of Contractor has the duty to design the Work, as specified in the Contract Documents.

1.1.1.27 Dispute – Any Claim, dispute or other disagreement involving the interpretation of the Contract Documents, a change in the Contract Sum, and or a change in the Contract Time, and other matters in question arising out of, or relating to the Contract or the breach thereof, except for Claims which have been waived by lack of proper notice and/or the making or acceptance of final payment as provided in Articles 13.7.2 and 13.9.1

1.1.1.28. Drawings or Plans - The approved drawings and supplementary drawings showing the location, character, dimensions, and details of the Work to be done which are part of the Contract Documents.

1.1.1.29. Effective Date of the Agreement - The date indicated in the Agreement on which it becomes effective, but if no such date is indicated, it means the date on which the Agreement is signed and delivered by the last of the parties to the Contract.

1.1.1.30. Engineer or Architect - See Architect/Engineer.

1.1.1.31. Equal or Similar and Substitute - "Similar or Equal" or "Substitute", when used in relation to materials, parts, machinery, equipment, formulas of the Project and/or anything to them related, shall mean that they be of substantially the same quality, form, appearance, resistance, endurance, efficiency, capacity, safety, specifications and any other quality inherent, or related, to them as they are indicated in the drawings and/or specifications of the Contract.

1.1.1.32. Equipment - All machinery and implements, together with the necessary supplies for upkeep and maintenance, and all tools and apparatus necessary for the proper construction and acceptable completion of the Work.

1.1.1.33. Extra Work - An item of Work not provided for in the Contract as awarded but found by the Owner or its duly authorized representative necessary for the satisfactory completion of the Contract within its generally intended scope.

1.1.1.34. Extra Work Order - Is a written order issued by the Owner to Contractor and signed by both parties in a unit price contract concerning the performance of the Work or furnishing of materials involving Extra Work. It authorizes a change in the Work, adjustments in the Contract Price and/or Contract Time for services, or Work, for which there is no basis of payment, either direct or indirect, provided in the proposal, or Contract, or if the resulting overruns, or underruns, of any item, or items, exceed certain percentages. Extra Work Orders apply only to unit price contracts. Such Extra Work may be performed at agreed prices or as provided in Section 10.2 of these General Conditions.

1.1.1.35. Federal Agency - Any agency of the government of the United States of America or its succeeding agency.

1.1.1.36. Field Order - A written order issued by the Owner that requires minor changes in the Work but which does not involve a change in the Contract Price or the Contract Time.

1.1.1.37. Final Acceptance - Shall mean the acceptance of the Work by the Owner after the final inspection as evidenced by the Certificate of Final Acceptance sent to Contractor by Owner.

1.1.1.38. Force Account Work - Additional Work that is paid for based on the Cost of the Work as defined in Article 10.2.

1.1.1.39. Force Majeure - Means an act of God; earthquake; tidal wave; hurricane; act of the public enemy; war; blockade; public riot; lighting; fire; flood; explosion; a strike, excluding strikes and any other activity or demonstration by Owner's personnel that does not interfere directly with the Work; and any other cause, whether of the kind specifically enumerated herein or otherwise, which is not reasonably within the sole control of Contractor. A rain, windstorm flood or other natural phenomenon of normal intensity for the particular locality shall not be construed as Force Majeure.

1.1.1.40. Hazardous Environmental Condition - The presence at the Site of asbestos, PCBs, petroleum, hazardous waste, or radioactive material in such quantities or circumstances that may present a substantial danger to persons or property exposed thereto in connection with the Work.

1.1.1.41. Hazardous Waste - The term Hazardous Waste shall have the meaning provided in Section 1004 of the Solid Waste Disposal Act (42 U.S.C. §6903) as amended.

1.1.1.42. Holidays - Saturdays, Sundays and the legal holidays listed below on which the Contractor will not be allowed to perform Work under the Contract except as otherwise ordered or authorized in writing by the Owner. All other Holidays not listed below will be considered working days. Also, if any of the listed holidays falls on a Sunday, the following Monday will be considered a holiday.

New Year's Day	January 1
Three Kings Day	January 6
Good Friday	Variable
Independence Day	July 4
Constitution Day	July 25
Labor Day	First Monday of September
Election Day (when occurring)	Tuesday after 1st Monday in November
Thanksgiving	Fourth Thursday in November
Christmas Day	December 25

1.1.1.43. Laboratory - The material testing laboratory of the Owner or any other testing laboratory which may be approved by the Owner or its duly authorized representative.

1.1.1.44. Laws and Regulations; Laws or Regulations - Any and all applicable laws, rules, regulations, ordinances, codes, and orders of any and all governmental bodies, agencies, authorities, and courts having jurisdiction.

1.1.1.45. Liens - Charges, security interests, or encumbrances upon Project funds, real property, or personal property.

1.1.1.46. Major and Minor Contract Items - Any item having a Contract value equal to or greater than five per cent (5%) of the original Contract amount shall be considered as a major item. All the other Contract items shall be considered as minor items. A minor item may become a major item when the minor item is increased to the extent that the total cost of the item is equal to or greater than five per cent (5%) of the original Contract amount.

1.1.1.47. Materials - Any substances specified for use in the construction of the Project and its appurtenances.

1.1.1.48. Milestone - A principal event specified in the Contract Documents related to an intermediate completion date or time prior to the Substantial Completion of the whole Work.

1.1.1.49. Notice of Award - The written notice by the Owner to the apparent successful bidder stating that upon timely compliance by the apparent successful bidder with the conditions precedent listed therein, Owner will sign and deliver the Agreement.

1.1.1.50. Notice to Proceed - A written notice issued by the Owner to the Contractor fixing the date on which the Contract Time will commence to run and on which Contractor shall start to perform the Work under the Contract Documents. Such Notice to Proceed shall identify the persons included in article 5.2.2. Unless otherwise agreed by the parties, all permits and/or endorsements to be furnished by the Owner needed to start construction of the Project must be obtained prior to issuance of the Notice to Proceed.

1.1.1.51. OCIP - see Owner-Controlled Insurance Program.

1.1.1.52. Off-Site Work - Work to be performed outside of the of the Project's limits.

1.1.1.53. Owner - The Owner is the Department, Agency, Public Corporations, or any other instrumentality of the Commonwealth of Puerto Rico as identified in the Agreement and is referred to throughout the Contract Documents as if singular in number and masculine in gender. The term Owner means the Owner or his authorized representative. It shall also mean any person, or entity, named as such in the Contract Documents.

1.1.1.54. Owner-Controlled Insurance Program - also known as "OCIP". An insurance program under which

Commercial General Liability, Excess General Liability, Builder's Risk, and Contractor's Pollution Liability coverage are procured or provided by the Owner for the Contractor, Subcontractors of any tier, who have been properly enrolled, while performing operations at the Project Site.

1.1.1.55. Owner's Representative – One or more persons or entity designated by the Owner, who will perform the functions of the Owner as described in these General Conditions. The Owner's Representative may employ Project Inspectors and/or other assistants to perform any function, duty or responsibility, as delegated by the Owner's Representative, including but not limited to the detailed inspections of performance of any or all portions of the Work.

1.1.1.56. Partial Utilization - Use by Owner of a substantially completed part of the Work for the purpose for which it is intended (or a related purpose) prior to Substantial Completion of all the Work.

1.1.1.57. Pay Item - See Contract Item.

1.1.1.58. Payment Bond - The security required to be furnished by the Contractor and his Surety and approved by the Owner to guarantee the payment of all persons or entities supplying labor, material and equipment in the prosecution of the Work or services required for completion of the Contract.

1.1.1.59. Performance Bond - The security required to be furnished by the Contractor and his Surety and approved by the Owner to guarantee the completion of all the requirements of the Contract.

1.1.1.60. Plans - See Drawings.

1.1.1.61. Project – The total construction of which the Work to be performed under the Contract Documents is the whole, or part.

1.1.1.62. Project Inspector - The professional, duly licensed and collegiate Engineer or Architect, or a legally qualified entity, contracted and/or designated by the Owner and/or the Owner's Representative to perform, as a Project Inspector, the continuous on Site inspection of any or all portions of the Work.

1.1.1.63. Project Manager- The professional licensed and collegiate Engineer or Architect, designated in accordance with the Contract as the Contractor's authorized representative who is made by Contractor responsible for and placed in charge of the Work.

1.1.1.64. Project Manual - The bound documentary information prepared for bidding and constructing the Work.

1.1.1.65.Project Schedule- A schedule, prepared and maintained by Contractor, describing the sequence and duration of the activities comprising the Work within the Contract Times, as required by Article 6.4 of these General Conditions.

1.1.1.66. Reasonable Close Conformity - Compliance with reasonable and customary manufacturing and construction tolerances when working tolerances are not specified. When working tolerances are specified, reasonably close conformity means compliance with such working tolerances. Without detracting from the complete and absolute discretion of the Owner or its duly authorized representative to insist upon compliance with such tolerances, the Owner or its duly authorized representative may, at his sole option and reasonable discretion, accept variations beyond such tolerances when and where they will not materially affect the value or utility of the Work and the interests of the Owner.

1.1.1.67. Reference Specifications - Specifications issued by other official and/or professional organizations that are referred to and made part of the Owner's specifications and other Contract Documents. Unless otherwise specifically indicated in the Contract Documents, references cited shall be the edition of such specifications in effect at the time the Project is advertised for bids/proposals.

1.1.1.68. Right of Way - A general term denoting land, property, easement or interest therein, usually in a strip, acquired for the Project or for the benefit of another project or public utility.

1.1.1.69. Samples - Physical examples of materials, equipment, or workmanship that are representative of some portion of the Work and which establish the standards by which such portion of the Work will be judged.

1.1.1.70. Shop Drawings or Working Drawings - All drawings, diagrams, schedules, and other data or information, which are specifically prepared or assembled by or for the Contractor and submitted by Contractor to illustrate some portion of the Work.

1.1.1.71. Site - Lands or areas indicated in the Contract Documents as being furnished by Owner upon which the Work is to be performed, including rights-of-way and easements for access thereto, and such other lands furnished by Owner that are designated for the use of Contractor. It shall also mean areas for the performance of off-site work, if same is required in the Contract Documents.

1.1.1.72. Special Conditions - Special requirements, regulations or direction, covering conditions peculiar to a particular project. Special Conditions shall prevail over particular provisions of these General Conditions only when such option is provided in any particular Article of these General Conditions by the use of words such as "unless otherwise indicated in the Contract Documents…" In all other instances these General Conditions shall prevail over any conflicting provision contained in the Special Conditions.

1.1.1.73. Specialty Item - A Contract Item, which is specifically identified in the Contract Documents as exempted from the computations to determine the total amount of the Work that the Contractor may be authorized to subcontract.

1.1.1.74. Specifications - That part of the Contract Documents consisting of written Technical Specifications, descriptions of materials, equipment, systems, standards, and workmanship as applied to the Work and certain administrative details applicable to the Work.

1.1.1.75. Standard Drawings - See Standard Plans.

1.1.1.76. Standard Plans (or Standard Drawings) - Drawings approved for repetitive use, showing details to be used where appropriate, included in the Plans or published as a separate document.

1.1.1.77. Standard Specifications - The set of specifications approved by the Owner for general application and repetitive use.

1.1.1.78. Subcontractor - A Subcontractor is an individual or entity that has a direct contract with the Contractor to perform any of the Work at the Site. The term Subcontractor as referred throughout the Contract Documents means the Subcontractor or his authorized representative.

1.1.1.79. Substantial Completion - The time at which the Work (or a specified part thereof) has progressed to the point where, in the opinion of the Owner, or its authorized representative, the Work (or a specified part thereof) is sufficiently complete, in accordance with the Contract Documents, so that the Work (or a specified part thereof) can be utilized for the purposes for which it is intended. The terms "substantially complete" and "substantially completed" as applied to all or part of the Work refer to Substantial Completion thereof.

1.1.1.80. Supplemental Agreement - A written agreement executed by the Contractor and Owner supplementing the Contract to cover Extra Work and/or changes and/or changed conditions incidental to and necessary for the acceptable completion or the Project.

1.1.1.81. Supplemental Specifications - Approved additions and/or revisions to the Standard Specifications, including Technical Specifications.

1.1.1.82. Supplementary Conditions - That part of the Contract Documents that amends, or supplements, where allowed, these General Conditions.

1.1.1.83 Supplier - A manufacturer, fabricator, supplier, distributor, materialmen, or vendor having a direct contract with Contractor or with any Subcontractor to furnish materials or equipment to be incorporated in the Work.

1.1.1.84. Surety - The insurance or bonding corporation or other legal entity, other than the Contractor, authorized to do business in Puerto Rico, bound with and for the Contractor for the proposal guaranty and/or the Payment Bond and/or the Performance Bond, or other bonds and insurances required by the Contract Documents.

1.1.1.85. Technical Specifications - The directions, provisions and requirements setting forth, or relating to, the performance of the Work and to the kind and quality of materials and labor to be furnished under the Contract for the execution of the Project. Any entity making changes in the Technical Specifications and/or Plans and Drawings, must perform so complying with all laws, codes, rules and regulations applying to them.

1.1.1.86. Underground Facilities/Utilities - All underground pipelines, conduits, ducts, cables, wires, manholes, vaults, tanks, tunnels, or other such facilities or attachments, and any easements containing such facilities, including those that convey electricity, gases, steam, liquid petroleum products, telephone or other communications, cable television, water, wastewater, storm water, other liquids or chemicals, or traffic or other control systems.

1.1.1.87. Unit Price Work - Work to be paid for based on unit prices.

1.1.1.88. Utility - A public or privately owned agency or entity and the lines and facilities for producing, transmitting or distributing data or voice communications, power, electricity, gas, oil, gasoline, water, sewer and similar commodities for public or private use.

1.1.1.89. Work - The entire construction referred to in the Agreement and the performance of the services identified to be provided in the Contract Documents. Work includes and is the result of performing or providing all labor, services, and documentation necessary to produce and make workable such construction, and furnishing, installing, and incorporating all materials and equipment into such construction, all as required by the Contract Documents.

1.1.1.90. Work Change Directive - A written statement to Contractor issued on or after the Effective Date of the Agreement and signed by the Owner and recommended by the Architect/Engineer ordering an addition, deletion, or revision in the Work, or responding to differing or unforeseen subsurface or physical conditions under which the Work is to be performed or to emergencies. A Work Change Directive will not change the Contract Price or the Contract Time but is evidence that the parties expect that the change ordered or documented by a Work Change Directive will be incorporated in a subsequently issued Change Order following negotiations by the parties as to its effect, if any, on the Contract Price or Contract Time.

1.1.1.91. Work Order - A written order, signed by the Owner, or its duly authorized representative, which requires performance of a specific contractual issue by the Contractor without negotiation of any sort. If Contractor is not in agreement with the Work Order, he may present a Claim as established in Article 11.5.

1.1.1.92. Working Day - A calendar day, exclusive of Saturday and Sunday and designated legal holidays. All periods of time under the Contract Documents shall be measured in calendar days, unless Working Days are specified.

1.1.1.93. Working Drawings - See Shop Drawings.

1.1.1.94. Written Amendment - See Supplemental Agreement.

1.2 Other Terms - The Owner's manuals and sets of regulations contain additional terms, not included above, which are used in the plans and other Contract Documents. Such terms shall be interpreted as defined in the Owner's manuals and sets of regulations.

1.3 Terminology

1.3.1 Intent of Certain Terms or Adjectives.

1.3.1.1. Unless otherwise indicated in the Contract Documents, whenever in the Contract Documents the terms "as allowed," "as approved," or terms of like effect or import are used, or the adjectives "reasonable," "suitable," "acceptable," "proper," "satisfactory," or adjectives of like effect or import are used to describe an action or determination of Architect/Engineer as to the Work, it is intended that such action or determination will be solely to evaluate, in general, the completed Work for compliance with the requirements of and information in the Contract Documents and conformance with the design concept of the completed Project as a functioning whole as shown or indicated in the Contract Documents (unless there is a specific statement indicating otherwise). The use of any such term or adjective shall not be effective to assign to Architect/Engineer any duty or authority to supervise or direct the performance of the Work or any duty or authority to undertake responsibility contrary to the provisions of these General Conditions and the Contract Documents.

1.3.2 Deficient.

1.3.2.1. The word "deficient," when modifying the word "Work," refers to Work, or part of it, that is unsatisfactory, faulty, or defective in that it does not conform to the Contract Document or does not meet the requirements of any inspection, reference standard, test, or approval referred to in the Contract Documents, or has been damaged prior to Owner's Representative's recommendation of final payment, unless responsibility for the protection thereof has been assumed by Owner at Substantial Completion in accordance with these General Conditions.

1.3.3 Furnish, Install, Perform, Provide.

1.3.3.1. The word "furnish," when used in connection with services, materials, or equipment, shall mean to supply and deliver said services, materials, or equipment to the Site (or some other specified location) ready for use, assembling, or installation and in usable or operable condition.

1.3.3.2. The word "install," when used in connection with services, materials, or equipment, shall mean to put into use or place in final position, said services, materials, or equipment complete and ready for intended use.

1.3.3.3. The words "perform" or "provide," when used in connection with services, materials, or equipment, shall mean to furnish and install said services, materials, or equipment complete and ready for intended use.

1.3.3.4. When "furnish," "install," "perform," or "provide" is not used in connection with services, materials, or equipment in a context clearly requiring an obligation of Contractor, “install”, “perform” and/or, "provide" is implied.

1.3.4 Unless stated otherwise in the Contract Documents, words or phrases that have a well-known technical or construction industry or trade meaning are used in the Contract Documents in accordance with such recognized meaning.

ARTICLE 2 - CONTRACT DOCUMENTS

2.1 Intent and Interpretation of Contract Documents

2.1.1 The Contract Documents constitutes the Contract. The Contract Documents represent the entire and integrated agreement between the parties hereto and supersedes all prior negotiations, representations, or agreements, either written or oral, including the bidding documents. The Contract Documents may be amended or modified as set forth in section 2.6.

2.1.2 The intent of the Contract Documents is to provide for the construction and completion of the Work described.

2.1.3 The Contractor shall furnish all labor, materials, equipment, tools, transportation and supplies required to complete the Work in accordance with the plans, specifications and terms of the Contract Documents.

2.1.4 The relationship which the parties intend to create under the Contract Documents is that of principal and independent Contractor and nothing herein is intended or shall be construed, so as to create a relationship of any kind, form or manner, such as but not limited to partnership, co-venturers, or employment between the Owner and Contractor, unless clearly otherwise expressed in the Contract Documents.

2.2 Order of Precedence of Contract Documents

2.2.1 The Contract Documents for each particular Project shall specify the order of precedence among the diverse documents that form the Contract Documents, except for the order of precedence of the General Conditions which may not be altered unless allowed to be altered by means of the Special Conditions as described in Article 1.1.1.71 . If no such order of precedence is established in the Contract Documents for the Project, the following order shall be followed:

2.2.1.1. Agreement (which shall include the Bonds and required insurance policies).

2.2.1.2. Dated Contractor's Proposal

2.2.1.3. All addenda issued prior to Bid Date. Unless no conflict exist between addenda, the issuance of a subsequent addendum will supersede all previously issued addenda.

2.2.1.4. Instructions to Bidders

2.2.1.5. The General Conditions of the Contract, (except where in accordance with Article 1.1.1.72 they are allowed to be changed by the Special Conditions).

2.2.1.6. Special Conditions.

2.2.1.7. Plans or Drawings

2.2.1.8. The Standard Drawings.

2.2.1.9. Specifications.

2.2.1.10. Technical Specifications.

2.2.1.11. Supplemental Specifications.

2.2.1.12. Standard Specifications.

2.3 Written Interpretations

2.3.1 Provided reasonable time is granted to Owner, written interpretations necessary for the proper execution or progress of the Work in the form of drawings, or otherwise, will be issued with reasonable promptness by the Owner, its designated representative, or Architect/Engineer so as not to adversely affect the critical path of the Project Schedule.

2.3.2 Contractor may make written request to the Owner, Owner's Representative, or the Architect/Engineer for such interpretations, when deemed necessary for the proper progress of the Work.

2.3.2.1. Such interpretations shall be consistent with and reasonably inferable from the Contract Documents and may be effected by Field Orders.

2.3.2.2. Interpretation drawings are not necessarily changes in the Work.

2.3.3 Except as may otherwise specifically stated in the Contract Documents, the provisions of the Contract Documents shall take precedence in resolving any conflict, error, ambiguity, or discrepancy between the provisions of the Contract Documents and:

2.3.3.1. the provisions of any standard, specification, manual, code, or instruction (whether or not specifically incorporated by reference in the Contract Documents); or

2.3.3.2. the provisions of any Laws or Regulations applicable to the performance of the Work (unless such an interpretation of the provisions of the Contract Documents would result in violation of such Law or Regulation).

2.4 Execution and Correlation

2.4.1. The Agreement shall be signed by the Owner and Contractor or their authorized representatives. The other component parts of the Contract Documents, if not signed by the Owner or Contractor, shall be marked by their authorized representative.

2.4.2 By executing the Contract Documents, the Contractor represents that he has visited the Contract Limits within the Site, familiarized himself with the local conditions under which the Work is to be performed, correlated his observations with the requirements of Contract Documents, and accepts the same.

2.4.2.1 The Owner warrants that it has submitted all the necessary documents required of Owner to be submitted to the appropriate governmental agencies needed for the prosecution of the Work, as required by applicable laws and regulations.

2.4.3 The Owner and the Contractor acknowledge that no service or Work under the Contract Documents will be performed until both parties duly sign the Contract and the Notice to Proceed is issued.

2.4.3.1. No payment and/or disbursement will be made or paid for services rendered in violation of this clause.

2.4.4 The Contract Time.

2.4.4.1. The- Contract Time must be specifically expressed on the Contract.

2.4.4.2. The Contract Time will be extended by the same number of days in which the term to execute the Work is extended by Change Orders or by any other mean allowed or permitted by the Contract or Contract Documents.

2.4.4.3. Furthermore, the parties agree that no Work or service will be performed or received beyond Final Acceptance of the Contract.

2.4.4.4. No payment and/or disbursement will be made or paid for services rendered in violation of this clause.

2.4.5 The Contract Documents are complementary, and what is required by anyone shall be as obligatory as if required by all. The intention of the Contract Documents is to include all labor, materials, equipment and other items as provided on these General Conditions necessary for the proper execution and completion of the Work.

2.4.5.1. It is not intended that Work not covered under any heading, section, branch, class or trade of the Specifications shall be supplied unless it is required elsewhere in the Contract Documents.

2.4.5.2. The organization of the Specifications in divisions, sections, articles, and the arrangement of drawings shall not control the Contractor in dividing the Work among subcontractors or in establishing the extent of Work to be performed by any trade.

2.5 Review of Contract Documents and Field Conditions by Contractor.

2.5.1 Before undertaking each part of the Work, Contractor shall carefully study and compare the Contract Documents with each other and check and verify pertinent dimensions and quantities therein and all applicable field measurements.

2.5.2 Contractor shall promptly report in writing to Owner any conflict, error, ambiguity, inconsistency, discrepancy, or omission that Contractor may discover and shall obtain a written interpretation or clarification from Owner before proceeding with any Work affected by said conflict, error, ambiguity, inconsistency, discrepancy or omission.

2.5.2.1. However, Contractor shall not be liable to Owner for failure to report any conflict, error, ambiguity, or discrepancy in the Contract Documents, unless Contractor failed to report it to the Owner with sufficient time for the Owner to provide a solution before the critical path of the Project is affected.

2.5.2.2. If the Contractor performs any construction activity in violation of this Article 2.5, the Contractor shall assume appropriate responsibility for such performance and shall bear an appropriate amount of the costs attributed to correction.

2.5.2.3. The Owner shall provide a solution to any reported conflict, error, ambiguity, discrepancy, or omission and if such solution adversely affects cost or the critical path of the Project, Owner will adjust Contract Price and Contract Time accordingly.

2.6 Amending and Supplementing Contract Documents

2.6.1 The Contract Documents may be amended to provide for additions, deletions, and revisions in the Work or to modify the terms and conditions thereof in one (1) or more of the following ways:

2.6.1.1. a Written Amendment;

2.6.1.2. a Change Order;

2.6.1.3. an Extra Work Order; or

2.6.1.4. a Work Change Directive.

2.6.2 The requirements of the Contract Documents may be supplemented and minor variations and deviations in

the Work may be authorized, by one (1) or more of the followings ways:

2.6.2.1. a Field Order;

2.6.2.2. Owner's, or his authorized representative's, approval of a Shop Drawing or Sample; or

2.6.2.3. Owner's, his authorized representatives, or Architect/Engineer's written interpretation or clarification.

2..6.3 A modification may be made only after execution of the Contract.

2..7 Copies Furnished, Ownership and Reuse of Documents

2.7.1. The Contractor will be furnished, free of charge, four (4) complete copies of the Contract Documents. Additional copies will be furnished upon request at the cost of reproduction. If Contractor so requests it, Owner will also furnish, free of charge, if available, an electronic file in PLT format (plot to File) so that the Contractor may make the copies of plans and/or drawings that he needs to build the Project. If such electronic files are not available, the Owner shall allow the Contractor to prepare electronic files and to print, at Contractor's cost, but without additional payment to Owner or Architect/Engineer, those copies needed for use by Contractor.

2.7.2. All Drawings, Specifications and copies thereof furnished by the Owner, Architect/Engineer, or Owner's Representative are, and shall remain, property of the Owner.

2.7.2.1. The Contractor can make copies of all the Drawings, Specifications, and other Contract Documents without permission, and without the payment of any fees or royalties, to the Owner, Architect/Engineer, or Owner's Representative as long as they are necessary for use in the execution of the Work.

2.7.3. Contractor and any Subcontractor or Supplier or other individual or entity performing or furnishing any of the Work under a direct or indirect contract with Owner:

2.7.3.1. shall not have or acquire any title to or ownership rights in any of the Drawings, Specifications, or other documents (or copies of any thereof) prepared by or bearing the seal of Owner, Architect/Engineer or Engineer's Consultant, including electronic media editions; and

2.7.3.2. shall not reuse any of such Drawings, Specifications, other documents, or copies thereof on extension of the Project or any other project without written consent of Owner.

2.7.4 This prohibition will survive final payment, completion, and acceptance of the Work, or termination or completion of the Contract. Nothing herein shall preclude Contractor from retaining copies of the Contract Documents for record purposes.

ARTICLE 3- BONDS AND INSURANCE

3.1 General- For Owners with OCIP

3.1.1 The Contractor shall not commence work under the Contract until he has obtained the various insurances policies and bonds specified in the Owner's Controlled Insurance Program. Owner shall provide to Contractor an exact copy of the applicable Owner Controlled Insurance Program manual together with the Contract Documents.

3.2 General- For Owners without OCIP.

3.2.1 The Contractor shall not commence work under the Contract until he has obtained the various

insurances and bonds specified in this section and has submitted to the Owner certificates of insurance (and other evidence requested by Owner) evidencing his compliance with the various insurance requirements set forth in this Article.

3.2.1.1. Unless otherwise indicated in the Contract Documents, Contractor must, within ten (10) calendar days from the Notice of Award, provide to Owner, in form satisfactory to Owner as provided in detail in this Article, the following:

3.2.1.1.1. Performance Bond

3.2.1.1.2. Payment Bonds

3.2.1.1.3. Workmen's Compensation Insurance Policy issued by The Puerto Rico State Insurance Fund and all Social Insurances required by law.

3.2.1.1.4. General Liability Insurance

3.2.1.1.5. Business Auto Policy

3.2.1.1.6. Contract Works Policy (Builder's Risk)

3.2.1.1.7. Installation Floater Policy (when applicable)

3.2.2 Notwithstanding the requirements set forth in this Article, the Owner may opt out of part of the requirements included in this Article and require any and all other policies that it understands are needed for its particular construction projects, including other policies not required herein.

3.2.2.1. However, such decision to opt out of part of the requirements of this Article must be written and signed by the Owner stating particularly the reasoning behind it Such written decision must be made part of Owner's Project file.

3.2.3. The insurance and bond policies required herein shall be obtained from insurance and surety companies complying with the requirements of Puerto Rico's Insurance Commissioner.

3.2.3.1. Prior to Bid announcement Date, Owner will publish a list of unacceptable insurance and bonding companies so that Contractor has knowledge of which companies are not authorized to provide insurances or bonds for the Work. Unless otherwise indicated in the Contract Documents, the Contractor must obtain an endorsement naming the Owner as an additional insured in each of the required insurance policies in this Article (as applicable).

3.2.4 The Contractor shall, throughout the performance of Work under the Contract and until the Final Acceptance of the Project, maintain current, and in effect all the required insurance, except the Contract Works Policy (Builder's Risk), which shall terminate on the date of Substantial Completion.

3.2.4.1. If on the termination date of any of the policies, the Project is still under construction and the Contractor has not renewed the policies, the Owner can renew them and deduct the amount paid for the premium, and applicable costs from the next payment, only if Contractor does not remedy and provide timely evidence of coverage.

3.2.5. Insurance coverage in the minimum limit amounts set forth herein shall not be construed to release the

Contractor from liability in excess of such coverage limit. Contractor must give thirty (30) calendar days written notice to Owner before any policy coverage is changed, canceled or not renewed and shall cause the insurance carrier to do the same.

3.2.6 Acceptance of Insurance; Option to Replace. If either Owner or Contractor has any objection to the coverage afforded by or to other provisions of the insurance required to be purchased and maintained by the other party in accordance with this Article on the basis of non-conformance with the Contract Documents, the objecting party shall so notify the other party in writing within twenty (20) days after receipt of the certificates of insurance and bonds (or other such evidence) required by Article 3.1.1.

3.2.6.1. Owner and Contractor shall each provide to the other such additional information with respect to insurance provided as the other may reasonably request.

3.2.6.2. If either party fails to purchase or maintain all of the insurance required of such party by the Contract Documents, such party shall notify the other party in writing of such failure prior to the start of the Work, or of such failure is to maintain, prior to any change in the required coverage.

3.2.6.3. Without prejudice to any other right or remedy, the other party may elect to obtain equivalent insurance to protect such other party's interest at the expense of the party who was required to provide such coverage, and a Change Order (or Extra Work Order in a unit price Contract) shall be issued to adjust the Contract Price accordingly.

3.2.7. If Owner finds it necessary or convenient to occupy or use a portion or portions of the Work prior to Substantial Completion of all the Work as provided in section 14.5 no such use or occupancy shall commence before the insurers providing the property insurance pursuant to section 3.6 have acknowledged notice thereof and in writing effected any changes in coverage needed thereby.

3.2.7.1. The insurers providing the property insurance shall consent by endorsement on the policy or policies, but the property insurance shall not be canceled or permitted to lapse on account of any such partial use or occupancy.

3.2.7.2. If the Owner accepts, occupies, or uses a portion, or portions, of the Work for its intended use, or whatever use he deems necessary or convenient, it is the Owner's responsibility to insure the property comprising said portion, or portions of the Work.

3.2.7.3. If the Contractor obtained the Contract Works Policy (Builder's Risk) for the Work, the Owner may request that Contractor continues to carry said insurance and will pay the cost, as a Change Order, based on the proportion of the occupied area versus the total Project area.

3.2.7.4. If requested by Contractor, the Owner shall supply copy of its insurance policy, and/or certificate of insurance evidencing that said portion, or portions, of the Work now under the Owner's care, custody and control is properly insured.

3.3 Performance, Payment, and Other Bonds

3.3.1. Unless otherwise stated in the Contract Documents, the Contractor must, within ten (10) calendar days from the date of Notice of Award, furnish and file with the Owner, in form satisfactory to, and with Sureties approved by the Owner, the following:

3.3.1.1. Performance Bond to guarantee the faithful performance of the Contract, in an amount equal to at least fifty percent (50%), but not more than one hundred percent (100%) of the Contract Sum, as stated in the Supplementary General Conditions of the Contract. If none is stated, the amount shall be one hundred percent

(100%) of the Contract Sum.

3.3.1.2. Payment Bond, including Labor Bond in an amount equal to at least fifty percent (50%), but not more than one hundred percent (100%) of the Contract Sum, as stated in Supplementary General Conditions of the Contract. If none is stated, the amount shall be one hundred percent (100%) of the Contract Sum.

3.3.1.3. A separate and additional Payment Bond in an amount equal to the requirements of Law No. 111, approved June 22, 1961, as it may be amended in the future, payable to the Secretary of Labor of the Commonwealth of Puerto Rico to guarantee payment to laborers and employees of the Contractor.

3.3.1.4. Contractor shall also furnish such other Bonds as are required by the Contract Documents.

3.3.2. The Payment and Performance Bonds shall remain in effect as follows:

3.3.2.1. Under the Performance Bond: one (1) year after the date when the final payment becomes due for warranty work, as stipulated in the warranty clause, or as provided otherwise by Laws or Regulations or by the Contract Documents.

3.3.2.2. Under the Payment Bond: six (6) months after the retainage is paid in full to the Contractor, except as provided otherwise by Laws or Regulations or by the Contract Documents.

3.3.3 All Bonds shall be in the form prescribed by the Contract Documents except as provided otherwise by Laws or Regulations. All Bonds must be signed by an attorney in fact duly authorized by the Commissioner of Insurance of Puerto Rico, and must be accompanied by a certified copy of such power of attorney.

3.3.4 If the Surety on any Bond furnished by Contractor is declared bankrupt or becomes insolvent or its right to do business is terminated in any state where any part of the Project is located or it ceases to meet the requirements of the Puerto Rico's Insurance Commissioner, Contractor shall within twenty (20) days thereafter substitute said Bond and Surety with acceptable substitutes.

3.4 Workmen's Compensation Insurance

3.4.1 The Contractor shall provide Worker's Compensation Insurance as required by the "Workers' Compensation Act of the Commonwealth of Puerto Rico". The Contractor shall furnish the Owner a certificate from the State Insurance Fund Corporation covered by the Workers' Compensation Act of the Commonwealth of Puerto Rico.

3.4.2 The Contractor shall also be responsible for compliance with said "Workers' Compensation Act" by all his subcontractors and agents.

3.5 Contractor's Liability Insurance

3.5.1 Contractor shall purchase and maintain the following liability insurance coverage, in an occurrence format, and other insurance as is appropriate for the Work being performed and will provide protection from claims set forth which may arise out of or result from Contractor's performance of the Work and Contractor's other obligations under the Contract Documents, whether it is to be performed by Contractor, any Subcontractor or Supplier, or by anyone directly or indirectly employed by any of them to perform any of the Work, or by anyone for whose acts any of them may be liable:

3.5.1.1. Limits. Unless otherwise stated in the Special Conditions of the Contract, the liability insurance limits shall not be less than:

3.5.1.1.1.	General Aggregate Limit	$1,000,000
3.5.1.1.2.	Products/Completed Operations Aggregate Limit	$1,000,000
3.5.1.1.3.	Personal and Advertising Injury Limits	$ 500,000
3.5.1.1.4.	Each Occurrence Limit	$ 500,000
3.5.1.1.5.	Fire Damage Limit	$ 50,000
3.5.1.1.6.	Medical Expense Limit	$ 5,000

3.5.1.2. Claims for damages because of bodily injury, occupational sickness or disease, or death of any person other than Contractor's employees;

3.5.1.3. Claims for damages insured by reasonably available personal injury liability coverage which are sustained: (i) by any person as a result of an offense directly or indirectly related to the employment of such person by Contractor, or (ii) by any other person for any other reason;

3.5.1.4. Claims for damages, other than to the Work itself, because o injury to or destruction of tangible property wherever located, including loss of use resulting there from.

3.5.2 The insurance policies so required by this section 3.4 to be purchased and maintained, unless otherwise specified in the Contract Documents, shall:

3.5.2.1. include at least the specific coverage and be written for no less than the limits of liability provided in the Supplementary Conditions or required by Laws or Regulations, whichever is greater,

3.5.2.2. include complete operations/premises/products insurance;

3.5.2.3. include contractual liability insurance covering Contractor's indemnity obligations under these General Conditions. Unless otherwise specified in the Contract Documents, the indemnity clause shall read as follows:

3.5.2.3.1. The Contractor for itself, agents, employees, successors and assigns agrees to save harmless the Owner, its Officers, Agents, Employees and Architect/Engineer from and against any and all claims, demands and/or suits, except as stated below, whether judicial or extra judicial for any cost whatever arising out or related to the execution of the Contract, and its insurers shall defend the Owner, its officers, agents, Employees and Architect/Engineer from such claims, demands and/or suits and shall bear all the expenses for such defense contemplated within the coverage limits provided by the Contractor's general liability policy, except where such claims, demands and/or suits are due solely to the negligence of the Owner, its Officers, Agents, employees and negligence, errors and/or omissions of the work performed by the Architect/Engineer.

3.5.2.4. include personal & advertising liability.

3.5.2.5 include XCU hazards (Explosion, Collapse, and Underground), as applicable.

3.5.2.6. include Contractor's subcontracted work;

3.5.2.7. include fire damage and medical expenses;

3.5.2.8. remain in effect at least until Final Acceptance and at all times thereafter when Contractor may be correcting, removing or replacing Work; in accordance with section 13.7 and

3.5.2.9. Include Employer's Liability - Stop Gap coverage with a minimum limit of five hundred thousand

dollars ($500,000.00) each personal occurrence and five hundred thousand dollars ($500,000.00) each accident.

3.6 Business Auto Policy

3.6.1 Automobile Liability coverage shall be written to protect the Contractor against all claims for bodily injuries to members of the public and damage to property of others arising from the use of motor vehicles, and shall cover operations on or the site of all motor vehicles, whether they are owned, non-owned or hired.

3.6.2 Unless otherwise stated in the Contract Documents, the liability limits shall not be less than:

3.6.2.1. Bodily Injury: two hundred and fifty thousand dollars ($250,000.00) each person and five hundred thousand dollars ($500,000.00) each occurrence.

3.6.2.2. Property Damage: one hundred thousand dollars ($100,000.00) each occurrence or two hundred and fifty thousand dollars ($250,000.00) combined single limit for bodily injuries and property damage liability.

3.7 Contract Work-Builders Risk Insurance

3.7.1 Unless otherwise provided in the Contract Documents, the Contractor shall provide a Builder's Risk policy for the amount of coverage set in the Contract Documents. The Builders Risk policy will insure against property damage to the building or structure being constructed or erected during the course of construction.

3.7.1.1. The description of covered property should include all fixtures, materials and supplies to be used in or incidental to, the construction. It should also cover equipment, machinery, materials, etc., not yet installed but destined to become a permanent part of the structure, on the Site or at off Site temporary storage locations.

3.7.1.2. This insurance shall be written under an Inland Marine all risk form, including earthquake, windstorm and flood coverage and shall protect the Contractor, Subcontractors, and the Owner and shall contain a waiver of subrogation clause against the insured parties.

3.7.1.3. Coverage shall be for an amount equal to the Contract Sum, unless otherwise specified in the Contract Documents.

3.7.1.4. Coverage shall include expenses incurred in the repair or replacement of any insured property.

3.7.1.5. Coverage shall include materials and/or equipment stored at the Site or at another location that was agreed to in writing by Owner prior to being incorporated in the Work, provided that such materials and/or equipment have been included in an Application for Payment recommended by Owner.

3.7.1.6. Coverage shall allow partial utilization of the Work by Owner, if Owner complies with Article 3.2.7, herein

3.7.1.7. Coverage shall include testing and startup.

3.7.1.8. Coverage shall be maintained in effect until Substantial Completion is achieved unless otherwise agreed to in writing by Owner and Contractor with thirty (30) days written notice to each other additional insured to whom a certificate of insurance has been issued.

3.7.1.9. Unless otherwise stated in the Contract Documents, flood coverage limits shall be for the Contract Sum or up to a maximum of $250,000.00, whichever is lower.

3.7.1.10. Deductibles under this Policy shall be no more than:

3.7.1.10.1. Flooding no more than $5,000.00

3.7.1.10.2. For named windstorms, or hurricanes, no more than two percent (2%) of the Contract Sum.

3.7.1.10.3. For Earthquakes, no more than five percent (5%) of the total Contract Sum.

3.7.2. If the Contract Documents specify that Owner shall purchase the Builders Risk policy, said policy shall be under the same or better terms and conditions, than those indicated in section 3.6. If Contractor requests in writing that other special insurance be included in the property insurance policies provided under this section 3.6, Owner shall, if possible, include such insurance, and the cost thereof will be charged to Contractor by appropriate Change Order or Written Amendment.

3.7.2.1. Unless otherwise provided in the contract Documents, Owner shall be responsible for the deductible under this policy.

3.7.2.2. Prior to commencement of the Work at the Site, Owner shall in writing advice Contractor whether or not such other insurance has been procured by Owner.

3.7.3. The Contract Documents shall set forth, whenever applicable, which party shall purchase and maintain such boiler and machinery insurance or additional property insurance as may be required by the Supplementary Conditions or Laws and Regulations which will insure the interest of Owner, Contractor, and Subcontractors, each of whom is deemed to have an insurable interest and each shall be listed as an insured or additional insured. Unless otherwise set forth in the Contract Documents, said insurance, if needed, shall be purchased and paid for, by the Owner.

3.7.4. Receipt and Application of Insurance Proceeds

3.7.4.1. If Owner purchases said insurance, Owner is authorized and shall have power to adjust and settle any loss with the insurers unless one of the parties in interest shall object in writing to Owner's exercise of this power within fifteen (15) days after the occurrence of loss.

3.7.4.2. Owner shall settle with the insurers in accordance with what is agreed by the parties who own the insurable interest.

3.7.4.3. If no such agreement among the parties in interest is reached, Owner shall, on behalf of all parties, adjust and settle the loss with the insurers.

3.8 Installation Floater Policy

3.8.1. This policy shall be provided by the Contractor when Builders Risk policy does not apply and coverage is required for only a specific type of property during its installation.

3.8.2. The limit of insurance shall include the aggregate value of the Contractor's, Subcontractor's, or Owner's furnished equipment and materials to be erected or installed by the Contractor.

3.8.3. This insurance shall be written under an Inland Marine all risk form, including earthquake, windstorm and flood coverage and shall protect the Contractor, Subcontractors, and the Owner and shall contain a waiver of subrogation clause against the insured parties.

3.9 Subcontractor's and Subcontractor's Liability Insurance.

3.9.1. Unless otherwise indicated in the Contract Documents, the Contractor shall, throughout the performance of Work under the Contract, procure and maintain in effect, and require all Subcontractors and others performing any such Work to procure and maintain in effect, insurance of the types applicable and with limits no less than the minimum amounts specified above, or insure the activity of his Subcontractors in his own policy.

3.10 Owner's Liability Insurance.

3.10.1 In addition to the insurance required to be provided by Contractor under Article 3.4, Owner, at Owner's option, may purchase and maintain Owner's own liability insurance as will protect Owner against claims which may arise from operations under the Contract Documents.

ARTICLE 4-SITE

4.1 Availability of Lands

4.1.1. Unless otherwise stated in the Contract Documents, Owner shall furnish the Site.

4.1.1.1. Owner shall notify Contractor of any known encumbrances or restrictions specifically related to use of the Site with which Contractor must comply in performing the Work.

4.1.1.2. Owner will obtain in a manner that does not adversely affect the critical path of the Work the easements for permanent structures or permanent changes to existing facilities.

4.1.1.3. If Contractor and Owner are unable to agree on the entitlement to or on the amount of any adjustment in the Contract Price or Contract Time, or both, as a result of any delay in Owner's complying with the responsibilities indicated above, Contractor may make a Claim therefore as provided in section 11.5.

4.1.2. Contractor shall secure and provide all additional lands and access thereto that may be required for temporary construction facilities or storage of materials and equipment.

4.2 Subsurface and Physical Conditions

4.2.1. Reports and Drawings. The Supplementary Conditions identify:

4.2.1.1. those reports of explorations and tests of subsurface conditions at or contiguous to the Site that Architect/Engineer has used in preparing the Contract Documents; and

4.2.1.2. those drawings of physical conditions in or relating to existing surface or subsurface structures at or contiguous to the Site (except Underground Facilities) that Architect/Engineer has used in preparing the Contract Documents.

4.2.2. Limited Reliance by Contractor on Technical Data Provided. On lineal type projects, Contractor may rely upon the general accuracy of the "technical data" contained in such reports and drawings, but such reports and drawings are

not part of the Contract Documents. Such "technical data" is identified in the Supplementary Conditions. Except for such reliance on such "technical data", Contractor may not rely upon or make any Claim against Owner, Architect/Engineer, or any of Architect/Engineer's Consultants with respect to:

4.2.2.1. the completeness of such reports and drawings for Contractor's construction purposes, including, but not limited to, any aspects of the means, methods, techniques, sequences, and procedures of construction to be employed by Contractor, and safety precautions and programs incident thereto; or

4.2.2.2. other data, interpretations, opinions, and information contained in such reports or shown or indicated in such drawings; or

4.2.2.3. any Contractor interpretation of, or conclusion drawn from, any "technical data" or any such other data, interpretations, opinions, or information.

4.2.3. Reliance by Contractor on Technical Data Provided. On building construction projects, Contractor may rely upon the general accuracy of the "technical data" contained in such reports and drawings, and such reports and drawings are part of the Contract Documents. Such "technical data" is identified in the Supplementary Conditions. Except for such reliance on such "technical data", Contractor may not rely upon or make any Claim against Owner, Architect/Engineer, or any of Architect/Engineer's Consultants with respect to:

4.2.3.1. the completeness of such reports and drawings for Contractor's construction purposes, including, but not limited to, any aspects of the means, methods, techniques, sequences, and procedures of construction to be employed by Contractor, and safety precautions and programs incident thereto; or

4.2.3.2. any Contractor interpretation of or conclusion drawn from any "technical data" or any such other data, interpretations, opinions, or information.

4.3 Differing Subsurface or Physical Conditions

4.3.1. Notice: If Contractor believes that any subsurface or physical condition at or contiguous to the Site that is uncovered or revealed either:

4.3.1.1. is of such a nature as to establish that any "technical data" on which Contractor is entitled to rely as provided in section 4.2 is materially inaccurate; or

4.3.1.2. is of such a nature as to require a change in the Contract Documents; or

4.3.1.3. differs materially from that shown or indicated in the Contract Documents; or

4.3.1.4. is of an unusual nature, and differs materially from conditions ordinarily encountered and generally recognized as inherent in work of the character provided for in the Contract Documents; then Contractor, shall promptly, in no event later than 3 working days, after becoming aware thereof and before further disturbing the subsurface or physical conditions or performing any Work in connection therewith (except in an emergency as required by Article 6.16), notify Owner's Representative, Owner and Architect/Engineer in writing about such condition. Contractor shall not further disturb such condition or perform any Work in connection therewith (except as aforesaid) until receipt of written order to do so.

4.3.2. Architect/Engineer's and/or Owner's Representative Review. After receipt of written notice as required by the preceding Article, Architect/Engineer and/or Owner's Representative will promptly review the pertinent condition and determine the necessity of Owner's obtaining additional exploration or tests with respect thereto, and advice Owner in writing of Architect/Engineer's and/or Owner's Representative findings and conclusions.

4.4. Price and Time Adjustments

4.4.1. The Contract Price, or the Contract Time, or both will be equitably adjusted to the extent that the existence of such differing subsurface or physical condition causes an increase or decrease in Contractor's costs of, or time required for, performance of the Work; subject, however, to the following:

4.4.1.1. such condition must meet any one or more of the categories described in Article 4.3.1; and

4.4.1.2. with respect to Work that is paid for on a Unit Price Basis, any adjustment in Contract Price will be subject to the provisions of section 11.3.

4.4.2 Contractor shall not be entitled to any adjustment in the Contract Price or Contract Time if:

4.4.2.1. Contractor knew of the existence of such conditions at the time Contractor made a final commitment to Owner in respect of Contract Price and Contract Time by the submission of a Bid or by becoming bound under a negotiated contract; or

4.4.2.2. the existence of such condition could reasonably have been discovered or revealed as a result of any visual examination, investigation, exploration, test, or study of the Site and contiguous areas required by the Bidding Requirements or Contract Documents to be conducted by Contractor prior to Contractor's making such final commitment; or

4.4.2.3. Contractor failed to give the written notice within the time and as required by Article 4.3.1.

4.4.3 If Owner and Contractor are unable to agree on entitlement to or on the amount or extent, if any, of any adjustment in the Contract Price, or Contract Time, or both, a Claim may be made therefore as provided in section 11.5.

4.5 Underground Facilities

4.5.1. Shown or Indicated. The information and/or data shown or indicated in the Contract Documents with respect to existing Underground Facilities at or contiguous to the Site is based on information and data furnished to Owner's Representative, Owner or Architect/Engineer by the owners of such Underground Facilities, including Owner, or by others. Unless it is otherwise expressly provided in the Supplementary Conditions:

4.5.1.1. Owner and Architect/Engineer shall be responsible for the reasonable accuracy or completeness of any such information or data; and

4.5.1.2. the costs of all of the following will be included in the Contract Price, and Contractor shall have full responsibility for:

4.5.1.2. 1. reviewing and checking all such information and data;

4.5.1.2.2. locating all Underground Facilities shown or indicated in the Contract Documents;

4.5.1.2.3. coordination of the Work with the owners of such Underground Facilities, including Owner, during construction; and

4.5.1.2.4. the safety and protection of all such Underground Facilities and repairing any damage thereto

resulting from the Work.

4.5.2. Not Shown or Indicated.

4.5.2.1. If an Underground Facility is uncovered or revealed at or contiguous to the Site which was not shown or indicated, or not shown or indicated with reasonable accuracy in the Contract Documents, Contractor shall, promptly after becoming aware thereof and before further disturbing conditions affected thereby or performing any Work in connection therewith (except in an emergency as required by Article 14.13), notify said findings in writing to the owner of such Underground Facility, Owner's Representative and Architect/Engineer.

4.5.2.2. Architect/Engineer, Owner's Representative and Owner will promptly review the Underground Facility and determine the extent, if any, to which a change is required in the Contract Documents to reflect and document the consequences of the existence or location of the Underground Facility.

4.5.2.3. During such time, Contractor shall be responsible for the safety and protection of such Underground Facility.

4.5.2.4. If Owner's Representative concludes that a change in the Contract Documents is required, a Work Change Directive, Change Order or Extra Work Order will be issued to reflect and document such consequences.

4.5.2.4.1. An equitable adjustment shall be made to the Contract Price or Contract Time, or both, if warranted under this Article 4.5.

4.5.2.4.2. If Owner and Contractor are unable to agree on entitlement to, or on the amount or extent, if any, of any such adjustment in Contract Price or Contract Time, Owner or Contractor may make a Claim therefore as provided in section 11.5.

4.6. Reference Points

4.6.1. In projects requiring construction of buildings, at the beginning of the project, the Owner will set construction stakes establishing sufficient property lines, baseline and a bench mark. These stakes and marks will constitute all the surveying work the Owner will provide for the use of the Contractor. From the above-mentioned stakes and marks, the Contractor shall develop and establish all necessary marks and controls to perform his work. The Contractor will be held responsible for the preservation of original stakes and marks provided by the Owner at the beginning of the project, and if any of these stakes or marks are carelessly or willfully destroyed or disturbed by the Contractor, the cost of replacing them will be at Contractor's expense. The Owner will be responsible for the accuracy of the original lines and marks furnished to the Contractor.

4.6.1.1. In lineal projects, Owner shall provide engineering surveys to establish reference points for construction which, in Architect/Engineer's judgment, are necessary to enable Contractor to proceed with the Work.

4.6.2. Contractor shall be responsible thereafter for establishing the reference points and property monuments in accordance with the survey provided by Owner and laying out the Work, shall protect and preserve the reference points and property monuments, and shall make no changes or relocations without the prior written approval of Owner. Contractor shall be responsible for replacing the established reference points and property monuments, if affected during construction.

4.6.3. Contractor shall report to Owner's Representative and Architect/Engineer whenever any reference point or property monument is lost or destroyed or requires relocation because of necessary changes in grades or locations, and shall be responsible for the accurate replacement or relocation of such reference points or property monuments by professionally qualified personnel.

4.7. Hazardous Environmental Condition at Site

4.7.1. Reports, Studies and Drawings. Reference is made to the Supplementary Conditions for the identification of those reports and drawings relating to a Hazardous Environmental Condition identified at the Site, if any, that have been utilized by the Architect/Engineer in the Preparation of the Contract Documents.

4.7.2. Limited Reliance by Contractor on Technical Data Provided. On lineal type projects, Contractor may rely upon the general accuracy of the 'technical data" contained in such reports and drawings, but such reports and drawings are not part of the Contract Documents. Such "technical data" is identified in the Technical Specifications. Except for such reliance on such "technical data", Contractor may not rely upon or make any Claim against Owner, Architect/Engineer, or any of Architect/Engineer's Consultants with respect to:

4.7.2.1. the completeness of such reports and drawings for Contractor's construction purposes, including, but not limited to, any aspects of the means, methods, techniques, sequences, and procedures of construction to be employed by Contractor, and safety precautions and programs incident thereto; or

4.7.2.2. other data, interpretations, opinions, and information contained in such reports or shown or indicated in such drawings; or

4.7.2.3. any Contractor interpretation of or conclusion drawn from any "technical data" or any such other data, interpretations, opinions, or information.

4.7.3. Reliance by Contractor on Technical Specifications Provided. On building construction projects, unless otherwise indicated in the Contract Documents, Contractor may rely upon the general accuracy of the "technical data" contained in such Technical Specifications and/or Plans and Drawings. Except for such reliance on such "technical data", Contractor may not rely upon or make any Claim against Owner, Architect/Engineer, or any of Architect/Engineer's Consultants with respect to:

4.7.3.1. the completeness of such reports and drawings for Contractor's construction purposes, including any aspects of the means, methods, techniques, sequences, and procedures of construction to be employed by Contractor, and safety precautions and programs incident thereto; or

4.7.3.2. any Contractor interpretation of or conclusion drawn from any "technical data" or any such other data, interpretations, opinions, or information.

4.7.4. Contractor shall not be responsible for any Hazardous Environmental Condition uncovered or revealed at the Site that was not shown or indicated in Drawings or Specifications or identified in the Contract Documents to be within the scope of the Work.

4.7.5. Contractor shall be responsible for Hazardous Environmental Conditions created due to any materials brought to the Site by Contractor, Subcontractors, Suppliers, or anyone else for whom Contractor is responsible.

4.7.6. If Contractor encounters a Hazardous Environmental Condition or if Contractor or anyone for whom Contractor is responsible creates a Hazardous Environmental Condition, Contractor shall immediately:

4.7.6.1. at Owner's cost, secure or otherwise isolate such condition, if it is not the Contractor's fault; or at Contractor's cost, if it is his fault, or anyone for whom Contractor is responsible;

4.7.6.2. stop all Work in connection with such condition and in any area affected thereby (except in an emergency as required by section 6.16); and

4.7.6.3. notify Owner's Representative, Owner and Architect/Engineer and promptly thereafter confirm such notice in writing, no later than 24 hours after the condition has been encountered. Failure to do so shall constituted a waiver of any claim in connection thereto.

4.7.6.3.1. Owner shall promptly consult with Architect/Engineer and/or Owner's Representative concerning the necessity for Owner to retain a qualified expert to evaluate such condition or take corrective action.

4.7.7. Contractor shall not be required to resume Work in connection with such condition or in any affected area until after Owner's Representative has obtained any required permits related thereto and delivered to Contractor written notice:

4.7.7.1. specifying that such condition and any affected area is or has been rendered safe for the resumption of Work; or

4.7.7.2. specifying any special conditions under which such Work may be resumed safely.

4.7.7.3. If Owner, through Owner's Representative, and Contractor cannot agree as to entitlement to, or on the amount or extent, if any, of any adjustment in Contract Price or Contract Time, or both, as a result of such Work stoppage or such special conditions under which Work is agreed to be resumed by Contractor, either party may make a Claim therefore as provided in Article 11.5.

4.7.8. If after receipt of such written notice, Contractor does not agree to resume such Work based on a reasonable belief it is unsafe, or does not agree to resume such Work under such special conditions, then Owner's Representative may order the portion of the Work that is in the area affected by such condition to be deleted from the Work.

4.7.8.1. If Owner, through Owner's Representative, and Contractor cannot agree as to entitlement to, or on the amount or extent, if any, of an adjustment in Contract Price or Contract Time as a result of deleting such portion of the Work, then either party may make a Claim therefore as provided in Article 11.5.

4.7.8.2. Owner may have such deleted portion of the Work performed by Owner's own forces or others in accordance with Article 8.

4.7.9. To the fullest extent permitted by Laws or Regulations, Owner shall indemnify and hold harmless Contractor, Subcontractors, and the officers, directors, partners, employees, agents, other consultants, and subcontractors of each and any of them from and against all claims, costs, losses, and damages (including but not limited to all fees and charges of engineers, architects, attorneys, and other professionals and all court or arbitration or other dispute resolution costs) arising out of or relating to a Hazardous Environmental Condition, provided that such Hazardous Environmental Condition:

4.7.9.1. was not shown or indicated in the Drawings or Specifications or identified in the Contract Documents to be included within the scope of the Work, and

4.7.9.2. were not created by Contractor or by anyone for whom Contractor is responsible.

4.7.9.3. Nothing in this Article shall obligate Owner to indemnify any individual or entity from and against the consequences of that individual's or entity's own negligence.

4.7.10. To the fullest extent permitted by Laws or Regulations, Contractor shall indemnify and hold harmless Owner's Representative, Owner, Architect/Engineer, Architect/Engineer's Consultants, and the officers, directors, partners, employees, agents, other consultants, and subcontractors of each and any of them from and against all claims, costs, losses, and damages (including but not limited to all fees and charges of engineers, architects, attorneys, and other professionals and all court or arbitration or other dispute resolution costs) arising out of or relating to a Hazardous Environmental Condition created by Contractor or by anyone for whom Contractor is responsible.

4.7.10.1. Nothing in this Article shall obligate Contractor to indemnify any individual or entity from and against the consequences of that individual's or entity's own negligence.

4.7.11. The provisions of sections 4.2, 4.3 and 4.4 are not intended to apply to a Hazardous Environmental Condition uncovered or revealed at the Site.

ARTICLE 5-OWNER

5.1 General

5.1.1. Owner's responsibilities and obligations are expressed throughout these General Conditions and are not limited to the ones contained in this Article.

5.1.2. All functions of the Owner will be performed by the Contracting Officer, unless delegated to others in the Contract Documents.

5.1.3. The Contracting Officer may delegate his full authority to another person, and to that effect shall notify the Contractor by written communication.

5.1.4. Unless otherwise specified in the Contract Documents, the person signing this Contract shall be interpreted to mean the Contracting Officer.

5.2 Information and Services Required of the Owner

5.2.1. The Owner shall furnish all available information describing the Project including, but not limited to, physical characteristics, legal limits and utility locations for the Project.

5.2.1.1. Said information should have been made available with reasonable time, and, unless otherwise specified in Bid Documents, prior to bid opening.

5.2.2. Before commencement of the Work, as specified in the Notice to Proceed, the Owner shall inform the Contractor in writing the name of the Owner's Infrastructure Area Director, Architect/Engineer, Contracting Officer, Owner's Representative and Project Inspector, if applicable. Owner reserves the right to change, from time to time, the designated persons or entities and any other designated representative who will perform the functions of the Owner.

5.2.3 Furnishing of Right of Way - The Owner will be responsible for obtaining the necessary rights-of-way in advance of construction. Any exceptions will be indicated in the Contract Documents.

5.2.4 Information or services to be provided by Owner shall be furnished by the Owner with reasonable promptness so as to avoid any delay in the orderly programmed progress of the Work.

5.3 Pay Promptly When Due

5.3.1. Owner shall make payments to Contractor promptly when they are due.

5.4 Owner's Right to Stop the Work

5.4.1. The Owner's Representative and/or Owner may in accordance with Article 15.1.2 order the Contractor to stop the Work, or any portion thereof if the Contractor:

5.4.1.1. fails to start (and expeditiously continues) correcting defective work promptly after Contractor is notified in writing by the Owner;

5.4.1.2. persistently fails to supply materials or equipment in accordance with the Contract Documents; or

5.4.1.3. for any other significant reason deemed necessary to insure the proper execution of the Contract until the cause for such order has been eliminated.

5.5 Owner's Right to Carry Out the Work Without Terminating the Employment of the Contractor

5.5.1. If the Contractor persistently neglects to carry out the Work in accordance with the Contract Documents or persistently fails to comply with any provision of the Contract, the Owner, through the Owner's Representative, may, after ten (10) days written notice to the Contractor and Surety, if any, and without prejudice to any other remedy he may have, perform said Work and/or, remedy such deficiencies.

5.5.1.1. In such case, an appropriate deduction for the cost of performing said Work and/or correcting such deficiencies shall be made from the payments then, or thereafter, due the Contractor. If the payments then, or thereafter, due the Contractor are not sufficient to cover such amount, the Contractor and/or surety shall pay the difference to the Owner.

5.5.2. The cost to be charged to Contractor of such Work, repairs or replacement, will be the actual cost incurred by Owner.

5.6 Owner's Right to Clean Up

5.6.1. If a dispute arises between the separate contractors in the Project as to their responsibility for cleaning up as required by these General Conditions, the Owner may, after written notice to Contractor, clean up and charge the cost thereof to the several contractors in the proportion that the Architect/Engineer, or the Owner's Representative, determines equitable. If the Contractor is not in agreement with the cost distribution, he may make a claim as provided in Article 11.5.

5.7 Evidence of Financial Arrangements

5.7.1. Upon Contractor's request, Owner will furnish Contractor reasonable evidence that financial arrangements

have been made for the payment of Owners' obligations under the Contract, and that all documentation for said purpose has been filed pursuant to applicable Laws and Regulations.

5.7.1.1. If requested in writing by Contractor, Owner shall supply reasonable written evidence that Owner has complied with these requirements.

5.8 Limitations on Owner's Responsibilities

5.8.1. Unless otherwise provided in the Contract Documents the Owner, through Owner's Representative, shall have no authority over, nor responsibility for, Contractor's means, methods, techniques, sequences, or procedures of construction, or the safety precautions and programs incident thereto, or shall not be held responsible for any failure of Contractor to comply with Laws or Regulations applicable to the performance of the Work. Owner's Representative, or Owner, will not be responsible for Contractor's failure to perform the Work in accordance with the Contract Documents.

ARTICLE 6 - CONTRACTOR

6.1 Supervision and Superintendence

6.1.1. Contractor shall supervise and direct the Work competently and efficiently, devoting such attention thereto and applying such skills and expertise as may be necessary to perform the Work in accordance with the Contract Documents.

6.1.1.1. Contractor shall be solely responsible for the means, methods, techniques, sequences, and procedures of construction, but Contractor shall not be responsible for the negligence of Owner or Architect/Engineer in the design or specification of a specific means, method, technique, sequence, or procedure of construction, which is shown or indicated in and expressly required by the Contract Documents.

6.1.1.1.1. When the Contract Documents specify the use of a specific means, method, technique, sequence, or procedure of construction, which is shown or indicated in and expressly required by the Contract Document, such means, method, technique, sequence, or procedure of construction shall be used unless others are authorized by the Owner's Representative.

6.1.1.1.2. If the Contractor desires to use a means, method, technique, sequence, or procedure of construction other than specified in the Contract Documents, he shall request authority from the Owner's Representative to do so.

6.1.1.1.2.1. The request shall be in writing and shall include a description of the methods and equipment proposed and of the reasons for desiring to make the change.

6.1.1.1.2.2. If approval is given, it will be on the condition that the Contractor will be fully responsible for producing work in conformity with the Contract Documents.

6.1.1.1.2.3. If, after trial use of the substituted methods or equipment, the Owner's Representative determines that the Work produced does not meet Contract requirements, the Contractor shall discontinue the use of the substitute method or equipment and shall complete the remaining Work with the specified methods and equipment.

6.1.1.1.2.4. The Contractor shall remove the deficient Work and replace it with Work of specified quality, or take

such other corrective action as the Owner's Representative may direct.

6.1.1.1.2.5. No change will be made in the Contract amount for the construction items involved or in Contract Time as a result of authorizing a change in methods or equipment under these provisions.

6.1.1.1.3. Contractor shall be responsible to ascertain that the completed Work complies accurately with the Contract Documents.

6.1.2. Project Manager. Unless otherwise indicated in the Contract Documents, the Contractor shall employ a competent licensed and collegiate architect or engineer, as the Project Manager, and necessary assistants to direct the Work. These assistants shall be in attendance at the project site at all times during the prosecution of the Work. The Project Manager shall be satisfactory to the Owner or his representatives and shall not be changed except with the consent of the Owner, unless the Project Manager proves to be unsatisfactory to the Contractor (and Contractor gives Owner written notice of the specific reason for removal as Project Manager) or ceases to be in Contractor's employ.

6.1.2.1. The Project Manager will be Contractor's representative at the Site and shall have authority to act on behalf of Contractor. The Contractor, prior to the start of the Project, will inform the Owner's Representative, if already assigned, or the Owner, if not assigned, the name, authority and responsibilities of the Project Manager and/or Superintendent.

6.1.2.1.1. All communications given or received from the Project Manager shall be binding on Contractor. All communications related to the Contract directed to the Contractor and/or proceeding from the Owner, Architect/Engineer, Owner's Representative and other representatives of the Owner shall be made thru the Project Manager.

6.2 Labor and Working Hours

6.2.1. Contractor shall provide competent, suitably qualified personnel to survey, layout, and construct the Work as required by the Contract Documents.

6.2.1.1. The Contractor shall at all times enforce strict discipline and good order among his employees and shall not employ in relation to the Project or the Work any unfit person or anyone not skilled in the task assigned to him.

6.2.1.1.1. The Contractor shall be responsible to the Owner for the acts and omissions of all of his employees and all subcontractors, their agents and employees and all other persons performing any work under a contract with the Contractor.

6.2.1.2. The Contractor shall, at all times, employ sufficient labor and equipment for prosecuting the Work to full completion in the manner and within the time required in the Contract Documents.

6.2.1.2.1. Workers engaged in special work or skilled work shall have sufficient experience in the performance of such work and in the operation of the equipment and tools to perform it properly and satisfactorily.

6.2.1.2.2. Any person employed by the Contractor or by a subcontractor who, as determined by the Owner's Representative, does not perform his work in a proper and skillful manner, or is disrespectful, intemperate,

disorderly or otherwise objectionable shall, at the written request of the Owner's Representative, be removed forthwith by the Contractor or Subcontractor employing such employee, and such person shall not be employed again on any portion of the Work without the written consent of the Owner's Representative. Owner's Representative shall specify, in writing, the reason for the removal of such person from the jobsite.

6.2.1.2.2.1. Should the Contractor fail to remove such person or persons as required herein, the Owner may withhold payment of estimates which are or may become due, or may suspend the Work by written notice until such orders are complied with.

6.2.2. Except as otherwise required for the safety or protection of persons or the Work or property at the Site, or adjacent thereto, or for completion of daily Work as provided in Article 9.1.2.2.2. or as otherwise stated in the Contract Documents, all Work shall be performed during regular working hours and Contractor will not permit overtime work or the performance of Work on Saturday, Sunday, or any legal holiday without Owner's Representative's written consent (which will not be unreasonably withheld).

6.2.2.1. The Contractor shall comply with all the applicable Federal and Commonwealth laws, rules and regulations concerning fair labor practices including minimum wages, work hours, equal employment opportunities, non-discrimination, civil rights, employment of minors, and other labor relation matters.

6.2.2.2. The Contractor shall pay weekly, in lawful money of the United States of America, including payment by check or direct deposit, the entire amount of wages, less legally authorized or mandated deductions, earned by each of the laborers and employees engaged in the work.

6.2.2.2.1. The Contractor shall make available the Project payrolls to the Owner's Representative for inspection and shall submit copies of such payrolls to the Owner's Representative when required.

6.2.2.2.1.1. Any irregularities noted in the Project's payrolls will be brought to the attention of the Contractor by the Owner's Representative for appropriate corrective action and payment of any pending wages. Should the Contractor fail to take the necessary action, he will be subject to such civil and criminal proceedings as provided by law and regulations.

6.2.2.2.1.2. Payment of wages to laborers and employees of the Contractor for their work shall have preference over the payment of other debts of the Contractor, except as otherwise established by law.

6.3 Services, Materials, and Equipment

6.3.1. Unless otherwise specified in the Contract Documents, Contractor shall provide and assume full responsibility for all services, materials, equipment, labor, transportation, construction equipment and machinery, tools, appliances, fuel, power, light, heat, telephone, water, sanitary facilities, and all other facilities and incidentals necessary for the performance, testing, start-up, and completion of the Work.

6.3.2. All materials and equipment incorporated into the Work shall be as specified or, if not specified, shall be of good quality and new, except as otherwise provided in the Contract Documents.

6.3.2.1. All warranties and guarantees required by the Contract Documents shall expressly benefit Owner.

6.3.2.2. If required by Owner's Representative, Contractor shall furnish satisfactory evidence (including reports of required tests) as to the source, kind, and quality of materials and equipment.

6.3.2.3. All materials and equipment shall be stored, applied, installed, connected, erected, protected, used, cleaned, and conditioned in accordance with instructions of the applicable Supplier, except as otherwise provided in the Contract Documents.

6.4 Progress and Other Schedules

6.4.1. Measurement and payment.

6.4.1.1. Unless otherwise specified in the Contract Documents, all costs in connection with the preparation and maintenance of schedules, workplans, submittals and other work specified in this Article 6.4 are to be included and form part of the project's general administrative expenses. Contractor's Cost for said work required in Article 6.4 shall not be paid as a separate pay item in Unit Price contracts or as a Schedule of Values item, in Lump Sum contracts.

6.4.2. General.

6.4.2.1. Progress schedules shall represent a practical plan to complete the Work within the Contract Time, and shall convey the Contractor's intent as to the manner of prosecuting the progress of the Work.

6.4.2.2. The scheduling and execution of construction in accordance with the Contract Documents are the responsibility of the Contractor. The Contractor shall involve and coordinate all Subcontractors and Suppliers in the development and updating of progress schedules.

6.4.2.3. The submittal of progress schedules shall be understood to be the Contractor's representation that the progress schedule meets the requirements of the Contract Documents and that the Work is expected to be executed in the sequence and duration indicated in the progress schedule.

6.4.3. Scheduling format.

6.4.3.1. The Project Schedule shall be computer produced using the Critical Path Method ("CPM") format. The schedule shall be computer generated utilizing an Owner approved project scheduling software, as indicated in the Contract Documents, such as Primavera, Microsoft Project, or SureTrak. The project scheduling software selected shall be used consistently from commencement to Final Acceptance of the Project. If the Contractor desires to use a project scheduling software other than the one specified in the Contract Documents, he shall request authorization from the Owner's Representative to do so, prior to the issuance of the Notice to Proceed. If the Contract Documents do not indicate a specific scheduling program, the Contractor may use any of the three mentioned herein, at his sole option.

6.4.3.2. The Project Schedule shall be updated monthly and submitted as indicated in Article 6.4.4. .

6.4.3.3. The schedule shall show Contract tasks, percent complete, progress bars, baseline schedules, milestones, start and finish dates, and other breakdowns as required by the Engineer. The schedules shall show clearly the sequence of activities and shall list specifically the following activities:

6.4.3.3.1. interim milestones completion dates. Phasing and staging of the Work as specified shall be prominently identified;

6.4.3.3.2. submittals and the Owner's Representative review of submittals;

6.4.3.3.3. acquisition of permits;

6.4.3.3.4. any long lead time (over 60 days) orders for material and equipment;

6.4.3.3.5. work to be performed by other contractors and agencies;

6.4.3.3.6. delivery of Owner's furnished equipment and materials indicated for incorporation in the Work.

6.4.3.4. Descriptions of scheduled activities shall include sufficient detail to identify the work that is to be accomplished.

6.4.3.4.1. The schedule shall contain sufficient activities to clearly show the sequence and interdependencies of the Work. The Owner's Representative may request that additional activities and information be added and from time to time may also require reasonable amendments to the schedule format that result in more clarity as to how the information is presented.

6.4.3.4.2. Activity durations shall be expressed in whole days. Work that is to be performed by Subcontractor shall be clearly defined.

6.4.3.4.3. Critical path activities are those activities with a total float equal to or less than zero. Schedules with negative total float may be found to be impractical by the Owner's Representative.

6.4.3.4.4. A schedule showing that Work that is completed in less than the completion time specified, shall be considered to have float. The float shall be the time between the scheduled completion of the Work and the Contract completion date. Float time shall not be for the exclusive benefit of either the Owner or the Contractor. Float shall be a resource available to both parties.

6.4.3.4.4.1. If according to the critical path of the originally approved Project Schedule any party that generates a float in said critical path, then said float shall belong exclusively to the party generating said float.

6.4.3.4.5. A schedule found to be impractical for the preceding reasons or any other reasons shall be revised by the Contractor and resubmitted.

6.4.4 Submittals.

6.4.4.1. Within thirty (30) days after the effective date of the Notice to Proceed (unless otherwise specified in the Contract Documents), Contractor shall submit to Owner's Representative for its timely review:

6.4.4.1.1. a preliminary progress schedule indicating the times (numbers and days or dates) for starting and completing the various stages of the Work, including any Milestones specified in the Contract Documents;

6.4.4.1.2. a preliminary schedule of Shop Drawings and Sample submittals which will list each required submittal and the times for submitting, reviewing, and processing such submittal; and

6.4.4.1.3. a preliminary schedule of values for all of the Work, as specified on Article 13, herein.

6.4.4.2. Submit one (1) electronic copy and the number of hard copies of the Submittals required in Article 6.4 which the Contractor requires to be returned, plus three (3) hard copies which will be retained by the Owner.

6.4.4.3. Schedule submittals will be reviewed by the Owner's Representative, and shall be updated and revised as indicated in section 6.4.6. Re-submittals shall conform to the same requirements as original submittals.

6.4.4.4. The Contractor shall prepare and submit all schedules and schedule analysis reports in electronic as well as hard copies.

6.4.4.5. All progress schedule submittals are subject to review and approval by the Owner's Representative.

6.4.4.5.1. Unless otherwise provided in the Contract Documents, at least ten (10) days before submission of the Application for Payment, a conference, to be attended by Contractor, Owner's Representative, Architect/Engineer, and others as appropriate, will be held to review for purposes of acceptability to Owner's Representative, as provided below, the progress schedules submitted in accordance to Article 6.4.4.1. If said meeting is not held, for reasons other than due to the fault of the Contractor, or if the Owner's Representative does not provide timely approval, or corrections, to the submitted submittals specified in Article 6.4.1., all the previously submitted submittals shall be considered approved, provided Contractor has given notice directly to Owner as required in Article 17.3.2.

6.4.4.5.1.1. Contractor shall have an additional ten (10) days to make corrections and adjustments and to complete and resubmit the schedules. Owner's Representative shall approve said corrections within a period of ten (10) days from the date of re-submittal otherwise they shall be considered approved, provided Contractor has given notice directly to Owner as required in Article 17.3.2.

6.4.4.5.1.1.1. The third progress payment shall not be paid to Contractor until acceptable schedules are submitted to Owner's Representative, or until schedules are considered approved as specified herein.

6.4.4.5.1.1.2. The Progress Schedule will be acceptable to Owner's Representative if in accordance with the Agreement it provides an orderly progression of the Work to completion within any specified Milestones and the Contract Time.

6.4.4.5.1.1.3. Contractor's schedule of Shop Drawings and Sample submittals will be acceptable to Owner's Representative if it provides, in Owner's sole discretion, a workable arrangement for reviewing and processing the required submittals.

6.4.4.6. The first schedule submitted by the Contractor will be reviewed for format, as well as content. The Owner's Representative may request format changes. Once the format has been approved, all subsequent schedules shall be submitted in the approved format.

6.4.5 Four-week work plan.

6.4.5.1. A schedule in calendar time-scaled bar chart format depicting the Contractor's intended work activities for the upcoming four (4) week period shall be submitted on a monthly basis and shall be due on the day of the project's weekly meeting. Each activity of one (1) day or more in duration shall be indicated.

6.4.5.2. Any deviations, such as sequences of work, timing, and durations of activities from the approved Project Schedule, shall be noted and explained in writing.

6.4.5.3. The four (4) week work plan shall be submitted on sheets not less than 8 ½ inches by 11 inches, or as approved by the Owner's Representative.

6.4.6. Review, updates and revisions

6.4.6.1. The Owner's Representative will review and return to Contractor the schedule submittals, with written comments, within the following deadlines counted from the date of receipt.

6.4.6.1.1. Project CPM schedule: 14 calendar days.

6.4.6.1.2. Four (4) week work plan: 8 calendar days.

6.4.6.2. The Contractor shall make all corrections to the Project Schedule requested by the Owner's Representative and resubmit the schedule for approval. If the Contractor does not agree with the Owner's Representative's comments, the Contractor shall provide written notice of disagreement within five (5) days from the receipt of the Owner's Representative's comments. The Owner's Representative's comments on the four (4) week work plan for which the Contractor disagrees shall be resolved in a meeting held for that purpose, if necessary.

6.4.6.3. At least once each month, or often if indicated in the Contract Documents, the Contractor shall submit an updated schedule showing the progress of the Work to date and anticipated activities to be worked on. All updated schedules must comply with Article 6.4.

6.4.6.4. If, according to the approved Project Schedule, the Contractor is thirty (30) or more days behind as to the completion date of any milestone, or the schedule contains thirty (30) or more days of negative float, considering all approved time extensions, the Contractor shall submit a revised schedule, showing a practical plan to complete the Work within the Contract Time.

6.5 Submittals for Approval, Substitutes and/or "Equals"

6.5.1. Submittal for Approval of Materials, Shop Drawings and Samples; Plans and Working Drawings; As-Built Plans.

6.5.1.1. The Contractor shall submit all submittals for approvals of Materials, Shop Drawings and Samples to the Owner's Representative. The Owner's Representative will either perform the review and approval, or forward the Contractor's submittal to the Architect/Engineer's for his review and approval, in accordance with the accepted itinerary for Shop Drawings and Sample submittals.

6.5.1.2. All submittals will be identified as required by Owner's Representative and presented with the number of copies specified in the Contract Documents. If a number is not mentioned, seven (7) copies will be submitted. Of these seven (7) copies, four (4) shall be returned, duly evaluated, to the Contractor.

6.5.1.3. The data shown on the Shop Drawings will be complete with respect to quantities, dimensions, specified performance and design criteria, materials, and similar data to show Owner's Representative the services, materials, and equipment Contractor proposes to provide and to enable Owner's Representative to review the information for the limited purposes of complying with the requirements of Article 6.17.

6.5.1.4. The Architect/Engineer or the Owner's Representative shall have the following deadlines within which

to approve, request additional information or reject any Submittal for Approval of Materials, Shop Drawings and Samples:

6.5.1.4.1. For Materials, Shop Drawings or Samples which are the ones specified in the Contract Documents or are, in the opinion of the Owner's Representative, non-complex Shop Drawings or Materials, the Architect/Engineer or Owner's Representative shall have a period of ten (10) working days.

6.5.1.4.2. For Materials, Shop Drawings or Samples not complying with the requirements indicated in the previous Article, the period shall be twenty (20) working days.

6.5.1.4.3. If no comment by the Architect/Engineer or Owner's Representative is made within said period of time, the Contractor will have the right to Claim if said delay impacts the critical path.

6.5.1.4.4. The above mentioned deadlines can be extended if requested in writing by the Architect/Engineer and/or Owner's Representative as long as approval is made within a time period that does not alter the critical path. Such request for extension shall not be unreasonably denied.

6.5.1.5. Each Sample will be identified clearly as to material, supplier, pertinent data such as catalog numbers, and the use for which it is intended or otherwise as Owner's Representative may require, to enable the Architect/Engineer or the Owner's Representative to review the submittal for the limited purposes of complying with the requirements of Article 6.17.

6.5.1.5.1. The numbers of items each Sample to be submitted will be as specified in the Specifications. If no number of items is mentioned, three (3) samples will be submitted. Of these, three (3) samples, two (2) shall be returned, duly evaluated, to the Contractor.

6.5.2. Where an approval of Materials, Shop Drawing or Samples is required by the Contract Documents or the schedule of Shop Drawings and Sample submittals, any related Work performed, including materials purchases, prior to Owner's Representative or Architect/Engineer's review and approval of the pertinent submittal will be at the sole responsibility of Contractor.

6.5.3. Submittal Procedures.

6.5.3.1. Before delivering each submittal for approvals of Material, Shop Drawing or Sample, Contractor shall have:

6.5.3.1.1. verified that all shop drawing measurements, quantities, shop drawing dimensions, specified performance criteria, installation requirements, materials, catalog numbers, and similar information are in accordance with the Contract Documents and if not in accordance, ascertained that all variations are indicated in the submittal;

6.5.3.1.2. verified all materials with respect to intended use, fabrication, shipping, handling, storage, assembly, and installation pertaining to the performance of the Work;

6.5.3.1.3. verified all information relative to means, methods, techniques, sequences, and procedures of construction and safety precautions and programs incident thereto; and

6.5.3.1.4. Contractor shall also have reviewed and coordinated each Shop Drawing or Sample with other Shop Drawings or Samples and with the requirements of the Work and the Contract Documents.

6.5.3.2. Each submittal shall bear a stamp or specific written indication that Contractor has satisfied Contractor's obligations under the Contract Documents with respect to Contractor's review and approval of that submittal. If required in the Special Conditions, submittals for Materials and Samples must bear a notarized certificate of compliance.

6.5.3.3. At the time of each submittal, Contractor shall give Owner's Representative specific written notice of such variations, if any, that the submittal for approvals of material, Shop Drawing or Sample submitted may have from the requirements of the Contract Documents, such notice to be in a written communication included with the submittal.

6.5.4. The Architect/Engineer or Owner's Representative's Review.

6.5.4.1. Owner's Representative, either himself or through the Architect/Engineer, will perform a timely review, evaluation and comment of Shop Drawings and Samples in accordance with the schedule of Shop Drawings and Sample submittals acceptable to Owner's Representative. If no comment by the Owner's Representative is made within the time stated in this Article 6.5 the Contractor will have the right to claim pursuant the provisions of Article 11.5, if said delay impacts the critical path.

6.5.4.1.1. The Architect/Engineer or the Owner's Representative review and approval will be only to determine if the items covered by the submittals will, after installation or incorporation in the Work, conform to the information given in the Contract Documents and be compatible with the design concept of the completed Project as a functioning whole as indicated by the Contract Documents.

6.5.4.1.2. The Architect/Engineer or the Owner's Representative's review and approval will not extend to means, methods, techniques, sequences, or procedures of construction (except where a particular means, method, technique, sequence, or procedure of construction is specifically and expressly called for by the Contract Documents) or to safety precautions or programs incident thereto.

6.5.4.1.2.1. The review and approval of a separate item, as such, will not indicate approval of the assembly in which the item functions.

6.5.4.1.3. The Architect/Engineer or the Owner's Representative's review and approval of Shop Drawings or Samples shall not relieve Contractor from responsibility for any variation from the requirements of the Contract Documents unless Contractor has in writing called the Architect/Engineer or the Owner's Representative attention to each such variation at the time of each submittal as required by Article 6.17 and the Architect/Engineer or the Owner's Representative has given written approval of each such variation by specific written notation thereof incorporated in or accompanying the Shop Drawing or Sample approval; nor will any approval by the Architect/Engineer or the Owner's Representative relieve Contractor from responsibility for complying with the requirements of Article 6.17.

6.5.5. Re-submittal Procedures.

6.5.5.1. Contractor shall make corrections required by the Architect/Engineer or the Owner's Representative and shall return the required copies of materials submittals, the required number of corrected copies of Shop Drawings and submit as required new Samples for review and approval.

6.5.6 Substitutes and "Or-equals".

6.5.6.1. Whenever an item or material or equipment is specified or described in the Contract Documents by

using the name of a proprietary item or the name of a particular Supplier, the specification or description is intended to establish the type, function, appearance, and quality required. Unless the specification or description contains or is followed by words reading that no like, equivalent, or "or-equal" item or no substitution is permitted, other items of material or equipment or material or equipment of other Suppliers may be submitted to Owner's Representative for review under the circumstances described below. The Contractor will present his submittal for approval, indicating whether the item of material or equipment proposed is an Or Equal or a Substitute.

6.5.6.2. "Or-Equal" Items: If in Owner's Representative's sole discretion an item, or material or equipment proposed by Contractor is functionally equal to that named and sufficiently similar so that no change in related Work will be required, it will be considered by Owner's Representative as an "or-equal" item, in which case review and approval of the proposed item be accomplished without compliance with the special requirements for approval of the proposed substitute items and be acceptable or acceptable with comments. Owner's Representative's basis for rejection of the item of material or equipment as an "or equal" material shall be written and may be subject to appeal, as specified in Article 11.5 of these General Conditions, by Contractor. For the purposes of this Article, a proposed item of material or equipment will be considered functionally equal to an item so named if:

6.5.6.2.1. In the exercise of reasonable judgment, Owner's Representative determines that:

6.5.6.2.1.1. it is at least equal in quality, durability, appearance, strength, and design characteristics;

6.5.6.2.1.2. it will reliably perform at least equally well the function imposed by the design concept of the completed Project as a functioning whole, and;

6.5.6.2.2. Contractor certifies that:

6.5.6.2.2.1. there is no increase in cost to the Owner; and

6.5.6.2.2.2. it will conform substantially, even with deviations, to the detailed requirements of the item named in the Contract Documents.

6.5.6.2.2.3. Owner's Representative shall make the decision on the "or equal" material with sufficient time so as not to alter the Contractor's Programmed Schedule of the Work. If no comment by the Owner's Representative is made within said period of time, the Contractor will have the right to Claim pursuant the provisions of Article 11.5 if said delay impacts the critical path.

6.5.6.3. Substitute Items

6.5.6.3.1. If in Owner's Representative's sole discretion an item or material or equipment proposed by Contractor does not qualify as an "or-equal" item under Article 6.5.6, it will be considered a proposed substitute item.

6.5.6.3.2. Contractor shall submit sufficient information as provided below to allow Owner's Representative to determine that the item or material or equipment proposed is essentially equivalent to that specified and an acceptable substitute therefore.

6.5.6.3.2.1. Requests for review of proposed substitute items, material or equipment will not be accepted by Owner's Representative from anyone other than Contractor.

6.5.6.3.3. The procedure for review by Owner's Representative will be as set forth in Article 6.5.6, as

supplemented in these General Conditions and as Owner's Representative may decide is appropriate under the circumstances.

6.5.6.3.4. Contractor shall first make written application to Owner's Representative for review of a proposed substitute item, material or equipment that Contractor seeks to furnish or use.

6.5.6.3.4.1. The application shall certify that the proposed substitute item will perform adequately the functions and achieve the results called for by the general design, be similar in substance to that specified, and be suited to the same use as that specified.

6.5.6.3.4.2. The application will state the extent, if any, to which the use of the proposed substitute item will prejudice Contractor's timely achievement of Substantial Completion, whether or not use of the proposed substitute item in the Work will require a change in any of the Contract Documents (or in the provisions of any other direct contract with Owner for work on the Project) to adapt the design to the proposed substitute item and whether or not incorporation or use of the proposed substitute item in connection with the Work is subject to payment of any license fee or royalty.

6.5.6.3.4.3. All variations of the proposed substitute item from that specified will be identified in the application, and available engineering, sales, maintenance, repair, and replacement services will be indicated.

6.5.6.3.4.4. The application will also contain an itemized estimate of all costs or credits that will result directly or indirectly from use of such substitute item, including costs of redesign and claims of other contractors affected by any resulting change, all of which will be considered by Owner's Representative in the evaluation of the proposed substitute item.

6.5.6.3.4.5. Owner's Representative may require Contractor to furnish additional data about the proposed substitute item.

6.5.6.3.5. Owner's Representative shall make the decision on the "substitute" material with sufficient time so as not to alter the critical path. If no comment by the Owner's Representative is made within said period of time, the Contractor will have the right to Claim pursuant the provisions of Article 11.5 if said delay impacts the critical path.

6.5.6.3.6. Owner's Representative's basis for rejection of a "substitute" material shall be written and may be subject to appeal and Claim by Contractor, as specified in Article 11.5.

6.5.6.4. If a Substitute item is approved by the Owner and such change affects the Contract Price, then the Contract Price shall be equitably adjusted.

6.5.7. Substitute Construction Methods or Procedures.

6.5.7.1. If a specific means, method, technique, sequence, or procedure of construction is shown, or indicated in, or expressly required by the Contract Documents, Contractor may furnish or utilize a substitute means, method, technique, sequence, or procedure of construction approved by Owner's Representative.

6.5.7.1.1. Contractor shall submit sufficient information to allow Owner's Representative, in Owner's Representative's sole discretion, to determine that the substitute proposed is equivalent to that expressly called for by the Contract Documents. Such submittal shall be made with sufficient time as to allow the Owner's Representative to review it.

6.5.7.1.1.1. The procedure for review by Owner's Representative will be similar to that provided in section 6.5.6 but no Claim may be made by contractor due to untimely evaluation by Owner.

6.5.8. Owner's Representative's Evaluation.

6.5.8.1. Owner's Representative or Architect/Engineer will be allowed a reasonable time, which will not unreasonably delay the critical path of the Work, within which to evaluate each proposal or submittal made pursuant to Article 6.5.

6.5.8.2. Except as provided above. Owner's Representative will be the sole judge of acceptability.

6.5.8.3. No "or-equal" or substitute will be ordered, installed or utilized until Owner's Representative's review is complete, which will be evidenced by written approval by Owner for a substitute or an approved Shop Drawing or an "or-equal."

6.5.8.4. Owner's Representative will advise Contractor in writing of any negative determination.

6.5.8.5. Owner's Representative will charge Contractor for any overtime expenses and other costs incurred in the evaluation of a proposed substitute, similar, or equal materials, unless said proposal was submitted by Contractor with reasonable time as to afford the Owner the time necessary to analyze the submittal without affecting the Project Schedule.

6.5.9. Special Guarantee.

6.5.9.1. Owner's Representative may require Contractor to furnish at Contractor's expense a special performance guarantee or other surety with respect to any substitute.

6.5.10. Contractor's Expense.

6.5.10.1. Contractor shall provide all data in support of any proposed substitute or "or-equal" at Contractor's expense.

6.5.11. Approval of Submittals.

6.5.11.1. If within the periods of time provided under this Article 6 for approval of submittals made by the Contractor, the Owner's Representative fails to render his decision as to any submittal and the critical path is adversely affected, the Contractor shall require in writing the approval of the Owner's Representative, who shall have ten (10) working days to issue his decision. If no decision is forthcoming from the Owner's Representative within the stated time, for reasons other than due to the fault of Contractor, the submittal shall be considered approved, provided Contractor has also given the same timely notice directly to Owner required in Article 17.3.2

6.6 Review of Contract Documents

6.6.1. The Contractor shall carefully study and compare the Contract Documents with each other and with information furnished by the Owner and shall at once report to the Owner, Architect/Engineer, and Owner's Representative any error, inconsistency or omission he may discover.

6.6.1.1. The Contractor shall not be liable to the Owner for any errors, inconsistencies or omissions in the Contract Documents.

6.6.1.2. The Contractor shall not take advantage of any such errors, inconsistencies, or omissions.

6.6.1.3. The Owner's Representative after being notified by the Contractor of such errors, inconsistencies or omissions will make the corrections and interpretations deemed necessary for fulfilling the intent of the Contract Documents, within a reasonable time so as not to alter the programmed progress of the Work. If no comment by the Owner's Representative is made within said time the Contractor will have the right to Claim pursuant the provisions of Article 11.5 if said delay impacts the critical path.

6.7 Patent, Fees and Royalties

6.7.1. Contractor shall pay all license fees and royalties and assume all costs incident to the use, in the performance of the Work or the incorporation in the Work, of any invention, design, process, product, or device which is the subject or patent rights or copyrights held by others.

6.7.2. If a particular invention, design, process, product, or device is specified in the Contract Documents for use in the performance of the Work and if to the actual knowledge of Owner or Architect/Engineer its use is subject to patent rights or copyrights calling for the payment of any license fee or royalty to others, the existence of such rights shall be disclosed by Owner in the Contract Documents.

6.7.3 To the fullest extent permitted by Laws and Regulations, Contractor shall indemnify and hold harmless Owner, Architect/Engineer, Architect/Engineer's Consultants, and the officers, directors, partners, employees or agents, and other consultants of each and any of them from and against all claims, costs, losses, and damages (including but not limited to all fees and charges or engineers, architects, attorneys, and other professionals and all court or arbitration or other dispute resolution costs) arising out of or relating to any infringement of patent rights or copyrights incident to the use in the performance of the Work or resulting from the incorporation in the Work of any invention, design, process, product, or device not specified in the Contract Documents.

6.8 Permits

6.8.1. Unless otherwise indicated in the Contract Documents, the responsibilities for securing and paying for permits, governmental fees and licenses for work to be performed are as follows:

6.8.1.1. To obtain the Construction Permit, the Contractor shall pay the premiums to secure the State insurance Fund policy and the Municipal Construction Taxes, at the rate that is in effect at bid date, unless the Contractor is explicitly not obligated to pay said taxes under the terms and provisions of the Contract Documents, in which case, shall so be specifically stated in the Contract Documents. The Owner shall secure all the Architect or Engineer's and Owner's Representative's certificates necessary and pertinent needed to secure the Construction Permit as well as submit applications and secure the permits for the Plan CES and for the Federal Storm Water Drainage plan, if same is required for the Project.

6.8.1.2. To obtain the Use Permit, the Contractor shall secure the endorsements required for said Use Permit from all government agencies, unless one or more of these cannot be obtained due to circumstances beyond the control of the Contractor. The Owner must ascertain that the reports required for the Use Permit from the Architect or Engineer and Owner's Representative are duly filed with ARPE and must also obtain any of the above mentioned endorsements that cannot be obtained due to circumstances beyond the control of Contractor.

6.8.1.3. All payments due, or to become due, to any agency, public or private, for connection to, or improvement of any of said agencies' infrastructure (Impact Fees) shall be paid by the Owner with sufficient time so as not to adversely affect the critical path of the Work.

6.8.1.4. The Contractor shall secure and pay for all incidental permits required for the completion of the work, unless such incidental permits deviate from the normal procedures, or costs, of the requiring agency and shall do so in a timely manner so as not to adversely affect the critical path of the Work.

6.8.1.5. Any other fees or charges related to permitting to be paid by the Contractor will be indicated in the special conditions.

6.8.1.6. The duties of Owner and of Contactor stated in this Article 6.8 shall be performed in a timely manner as to not adversely affect the critical path of the Work.

6.9 Laws and Regulations

6.9.1. Contractor shall give all notices and comply with all Laws and Regulations applicable to the performance of the Work.

6.9.1.1. Except where otherwise expressly required by applicable Laws and Regulations, neither Owner, nor Owner's Representative nor Architect/Engineer shall be responsible for monitoring Contractor's compliance with any Laws or Regulations.

6.9.1.2. Should the Contractor observe that the Contract Documents are at variance with any Federal, Commonwealth and Municipal laws, ordinances, rules, regulations, by-laws, and all orders or decrees, he shall promptly notify the Owner's Representative in writing and the Owner's Representative shall instruct the Contractor, also in writing, as to how Contractor is to proceed. Any additional cost and /or extra time incurred by the Contractor to comply with Laws and Regulations enacted after the bid opening date, it may file a claim for equitable adjustment of the Contract Price or the Contract Time or both, as shall any decrease in cost or time resulting therefrom.

6.9.1.3. If the Contractor performs any work knowing it to be contrary to Federal, Commonwealth and Municipal laws, ordinances, rules, regulations, by-laws, orders or decrees, the Contractor shall assume full responsibility therefore, and shall bear all cost arising there from.

6.9.1.4. The Contractor shall save the Owner and its authorized representatives harmless from any claim or liability arising from or based on the infraction or violation of any such laws, ordinances, rules, regulations, by-laws, all orders or decrees, except if the infractions or violations are caused by acts of the Owner, or of Owner's authorized representatives.

6.9.1.5. If Contractor performs any Work knowing or having reason to know that he is acting contrary to said Laws or Regulations, Contractor shall bear all claims, costs, losses, and damages (including but not limited to all fees and charges of engineers, architects, attorneys, and other professionals and all court or arbitration or other dispute resolution costs) incurred as a consequence thereof. It shall not be Contractor's primary responsibility to make certain that the Specifications and Drawings are in accordance with Laws and Regulations, but this shall not release Contractor of Contractor's obligations hereunder.

6.10 Taxes

6.10.1. Contractor shall pay all sales, consumer, use, and other similar taxes required to be paid by Contractor in accordance with the Laws and Regulations of the place of the Project which are applicable during the performance of the Work and which were in effect at the bid opening date.

6.10.1.1. Among said taxes, the Contractor shall pay the municipal construction taxes applicable to the Project in a timely fashion, but no later than fifteen (15) calendar days after the first partial (certification) payment is made by the Owner to Contractor.

6.10.1.2. If specifically stated in the Contract Documents, the Municipal Construction tax rate may be determined between Owner and the municipal government where the project is to be located, in such case a specific rate shall be established by the mayor and the municipal legislature, and notified to the Contractor before bid time. If no such rate is indicated in the Contract Documents regarding such arrangement between Owner and the municipal government, then the Contractor shall pay at the rates prevailing at the time of the bid.

6.10.1.1.1. The Contractor shall furnish and deliver to the Owner written evidence that said payment(s) was made before the second partial (certification) payment is made by the Owner to Contractor.

6.10.1.1.2. In case that the Contractor does not furnish and deliver said evidence of payment, the Owner shall deduct from said partial (certification) payments the undisputed amount of municipal tax plus any penalties and fines and pay it directly to the municipality.

6.10.1.1.2.1. If the amount of the second partial (certification) payment is not enough to cover the total amount of the municipal tax, the Owner shall continue to deduct from the following partial (certification) payments until the undisputed amount is paid in full.

6.10.1.1.2.2. The direct payment provided for in Article 6.10.1.1.2 shall be effected after the retainage required in Article 13.2.2 is deducted.

6.11 Use of Site and Other Areas

6.11.1. Limitation on Use of Site and Other Areas.

6.11.1.1. Contractor shall confine construction equipment, the storage of materials and equipment, and the operations of workers to the Site and other areas permitted by Laws and Regulations, and shall not unreasonably encumber the Site and other areas with construction equipment or other materials or equipment.

6.11.1.1.1. Contractor shall assume full responsibility for any damage to any such land or area, or to the Owner or occupant thereof, or of any adjacent land or areas, resulting from the performance of the Work.

6.11.1.1.2. Should any claim be made by any such owner or occupant because of the performance of the Work, Contractor shall promptly resolve the dispute with such other party by negotiation or otherwise resolve the claim by arbitration or other dispute resolution proceeding or at law.

6.11.1.1.3. To the fullest extent permitted by Laws and Regulations, Contractor shall indemnify and hold Owner, Architect/Engineer, Architect/Engineer's Consultant, and the officers, directors, partners, employees, agents, and other consultants of each and any of them harmless from and against all claims, costs, losses, and damages

(including but not limited to all fees and charges or engineers, architects, attorneys, and other professionals and all court or arbitration or other dispute resolution costs) arising out of or relating to any claim or action, legal or equitable, brought by any such owner or occupant against Owner, Architect/Engineer, or any other party indemnified hereunder to the extent caused by or based upon Contractor's performance of the Work.

6.11.2. Removal of Debris during Performance of the Work.

6.11.2.1. During the progress of the Work, Contractor shall keep the Site and other areas free from excessive accumulations of waste materials, rubbish, and other debris caused by his operations on the Site.

6.11.2.1.1. Removal and disposal of such waste materials, rubbish, and other debris shall conform to applicable Laws and Regulations.

6.11.3. Cleaning.

6.11.3.1. Prior to Substantial Completion of the Work Contractor shall clean the Site and make it ready for utilization by Owner.

6.11.3.1.1. At the completion of the Work Contractor shall remove from the Site all tools, appliances, construction equipment and machinery, and surplus materials and shall restore to original condition all property not designated for alteration by the Contract Documents.

6.11.3.1.1.1. If the Contractor fails to clean up as indicated above, the Owner may do so and the cost thereof shall be charged to the Contractor.

6.11.4. Loading Structures.

6.11.4.1. Contractor shall not load nor permit any part of any structure to be loaded in any manner that will endanger the structure, nor shall Contractor subject any part of the Work or adjacent property to stresses or pressures that will endanger it.

6.11.4.2. Owner's Representative shall not permit any of the Owner's Other Contractors, his personnel, or any other entity performing work for him directly at the Site, to load any part of any structure in any manner that will endanger the structure, nor shall Owner's Representative subject any part of the Work or adjacent property to stresses or pressures that will endanger it.

6.11.5. Rights To and Use of Materials Found On the Work.

6.11.5.1. The Contractor, with the prior written approval of the Owner's Representative, may use to perform the Work materials obtained from existing structures at the Site which are to be removed that are determined by the Owner's Representative to be acceptable for a use approved in writing by Owner’s Representative.

6.11.5.2. Unless otherwise provided in the Contract Documents, material from any existing structures to be removed may be used temporarily by the Contractor in the erection of new structures.

6.11.5.2.1. If the material is to be salvaged for the Owner, its modification will not be permitted except as approved by the Owner's Representative.

6.11.5.2.2. Unless otherwise specified in the Contract Documents, all soil existing at the Project Site will be considered fit to be used as fill in the performance of the Work if such soil meets the Project's field fill criteria.

6.12 Record Document

6.12.1. Contractor shall maintain in a safe place at the Site one (1) record copy of all Drawings, Specifications, Addenda, Written Amendments, Change Orders, Extra Work Orders, Work Change Directives, Field Orders, and written interpretations and clarifications in good order and annotated showing changes made during construction.

6.12.1.1. Said documents together with all approved Samples and a counterpart of all approved Shop Drawings will be available to Architect/Engineer and the Owner's Representative.

6.12.1.2. If not previously submitted, prior to Final Acceptance, said documents, Samples, and Shop Drawings will be delivered to Owner's Representative for delivery to Owner.

6.13 Safety and Protection

6.13.1. Contractor shall be solely responsible for initiating, maintaining and supervising all safety precautions and programs in connection with the Work. Contractor shall take all necessary precautions for the safety of, and shall provide the necessary protection to prevent damage, injury or loss to:

6.13.1.1. all persons on the Site or who may be affected by the Work;

6.13.1.2. all the Work and materials and equipment to be incorporated therein, whether in storage on or off the Site; and

6.13.1.3. other property at the Site or adjacent thereto, including trees, shrubs, lawns, walks, pavements, roadways, structures, utilities, and Underground Facilities not designated for removal, relocation, or replacement in the course of construction.

6.13.2. Contractor shall comply with all applicable Laws and Regulations relating to the safety of persons or property, or to the protection of persons or property from damage, injury, or loss; and shall erect and maintain all necessary safeguards for such safety and protection.

6.13.2.1. Contractor shall notify owners of adjacent property and of Underground Facilities and utility owners when prosecution of the Work may affect them, and shall cooperate with them in the protection, removal, relocation, and replacement of their property.

6.13.2.2. All damage, injury, or loss to any property referred to in Articles 6.13.1.2 or 6.13.1.3 caused, directly or indirectly, in whole or in part, by Contractor any Subcontractor, Supplier, or any other individual or entity directly or indirectly employed by any of them to perform any of the Work, or anyone for whose acts any of them may be liable, shall be remedied by Contractor (except damage or loss attributable to the fault of Drawings or Specifications or to the acts or omissions of Owner or Architect/Engineer or Architect/Engineer's Consultant, or anyone employed by any of them, or anyone for whose acts any of them may be liable, and not attributable, directly or indirectly, in whole or in part, to the fault or negligence of Contractor or any Subcontractor, Supplier, or other individual or entity directly or indirectly employed by any of them).

6.13.2.3. Contractor's duties and responsibilities for safety and for protection of the Work shall continue until

such time as all the Work is completed and Owner's Representative has issued a notice to Owner and Contractor of Final Acceptance of the Work (except as otherwise expressly provided in connection with Substantial Completion).

6.13.3. If so provided in the bid documents, the Owner has the right to establish any reasonable monetary penalties for violations of this Section 6.13.

6.14 Safety Representative

6.14.1. Contractor shall designate a qualified and experienced safety representative at the Site whose duties and responsibilities shall be the prevention of accidents and the maintaining and supervising of safety precautions and programs. The safety representative at the Site may have other duties assigned to him.

6.15 Hazard Communication Programs

6.15.1. Contractor shall be responsible for coordinating any exchange of material safety data sheets or other hazard communication information required to be made available at the Site in accordance with Laws or Regulations.

6.16 Plans and Working Drawings; As-Built Plans.

6.16.1. Plans and Working Drawings.

6.16.1.1. The detail Plans and Specifications for the Project have been prepared by licensed and collegiate competent Architect/Engineer exercising reasonable care and are intended to show as clearly as is practicable the Work required to be performed. Contractor will rely on the accuracy of said drawings, specifically in their compliance with all applicable codes and regulations in effect on the bid opening date.

6.16.1.1.1. The Contractor realizes, however, that construction details cannot always be accurately anticipated and that in executing the Work, field conditions may require reasonable minor modifications in the details of plans and quantities of Work.

6.16.1.1.1.1. Therefore, all Work must be carried out taking into account the mentioned considerations as well as field conditions, to the satisfaction of the Owner's Representative, and in accordance with his instructions and with the Contract Documents.

6.16.2 Working Drawings

6.16.2.1. The Plans will be supplemented by such Working Drawings as are necessary to adequately control the Work.

6.16.22. Working Drawings for structures shall be furnished by the Contractor and shall consist of such detailed Plans as may be required to adequately control the Work and to complement the Plans furnished by the Owner.

6.16.2.3. They shall include, among others, stress sheets, shop drawings, erection plans, false work plans, cofferdam plans, bending diagrams for reinforcing steel or any other supplementary plans or similar data required of the Contractor.

6.16.3. Working Drawings and related documents submitted for manufactured and shop-fabricated products shall be accompanied by a certification from the manufacturer that the materials and/or equipment meet all the requirements of the Specifications.

6.16.3.1. In the event that any item is not exactly in accordance with the requirements of the Plans and Specifications, the certificate shall identify and explain each such difference.

6.16.4. Unless otherwise indicated, all Working Drawings are subject to review and acceptance by the Owner's Representative.

6.16.4.1. Such review and acceptance shall not release the Contractor from any of his responsibilities for the safe and successful completion of the Work.

6.16.4.2. The cost of preparing and furnishing all required Working Drawings is included in the Contract Price and no separate payment will be made for such Drawings.

6.17 As Built Record Drawings

6.17.1. The Contractor shall keep at the Site a copy of the Drawings marked in a neat manner that record all changes made during construction.

6.17.1.1. The set of provisional record Drawings shall be kept up to date and submitted for the inspection and approval of the Owner's Representative, at least five (5) days prior to any partial monthly payment, unless otherwise required in the Contract Documents.

6.17.2. Prior to Final Acceptance, the Contractor shall deliver the as built Drawings to the Owner's Representative.

6.17.2.1. These Drawings will be used as the draft for the preparation of the final As Built Drawings for the Project by Architect/Engineer.

6.17.3. The Architect/Engineer will, with the full cooperation of Contractor and of the Owner’s representative prepare final as-built record drawings in reproducible form as reasonably required by Owner, to be delivered to the Owner.

6.17.3.1. The Owner will cause the Architect/Engineer to submit, with enough time so as not to adversely alter the critical path of the Work, the revised as-built drawings to the required governmental entities and obtain the approval of an amended Construction Permit, if same is required, and deliver the same to Owner and Contractor. This amended Construction Permit will be used to obtain the Use Permit for the project.

6.18 Notice to Proceed.

6.18.1. After the Agreement has been executed, the Contractor will be formally notified to proceed with the Work or service provided in the Contract Documents.

6.18.1.1. The Notice to Proceed will stipulate the date on which Owner expects the Contractor will begin construction and the date on which Contract Time will commence to run.

6.18.1.2. Pre-Construction Conference.

6.18.1.2.1. Prior to the start of the Project the Owner will summon all interested parties to a Pre-construction Conference in order to organize the start of the work and other matters. If no such conference is summoned by the Owner, and in any event, the Contractor may start the Work on the date stated in the Notice to Proceed.

6.18.2. Prosecution and Progress.

6.18.2.1. After obtaining written permission issued by the Owner, the Contractor may assemble materials and equipment and start preliminary Work as soon as he is notified of the award, but no responsibility for acceptance and payment of the Work so performed shall be assumed by the Owner until and unless the Contract has been executed and the order to proceed issued.

6.18.2.2. The rate of progress in the prosecution of the Work shall be compared in accordance with Articles 4.2 and 4.3 with approved Progress Schedule as the Work progresses.

6.18.2.2.1. If the Contractor is at fault for falling thirty (30) working days or more behind the approved schedule or ten percent (10%) of Contract Time, whichever is less, Contractor shall submit a revised schedule for completion of the Work within the Contract Time and modify his operations, including, but not limited to, working overtime and on Saturdays, Sundays and legal holidays, to providing such additional materials, equipment and labor as necessary to comply with the revised schedule. Any additional cost caused by the modified schedule will be at Contractor's expense.

6.18.2.3. Should the prosecution of the Work be discontinued for any reason, the Contractor shall notify the Owner's Representative at least twenty-four (24) hours in advance of resuming operations.

6.18.3. Conformity with Plans and Specifications.

6.18.3.1. All work performed and materials furnished shall be in reasonably close conformity with the Plans and other Contract Documents requirements.

6.18.3.2. Plan dimensions and Contract Specification values are to be considered the target values to be strived for and complied with as the design values to which any allowed tolerances are applied.

6.18.3.2.1. Materials and workmanship shall be uniform in character and shall be reasonably close to the prescribed target value or to the middle portion of the tolerance range.

6.18.3.3. When the Specifications include an acceptance plan for any construction or characteristic of materials, the acceptance plan will be used by the parties to determine the attainment of Reasonably Close Conformity with plans and specifications and to assign a value to the non-conforming work which does not meet that standard.

6.18.4 Cooperation with Utilities.

6.18.4.1. The Owner will notify all utility companies, all pipe line owners, or other parties affected, and endeavor to have all necessary adjustments of the public or private utility fixtures, pipe lines, and other appurtenances within or adjacent to the limits of construction, which are not to be performed by the Contractor, made in accordance with the Project construction schedule.

6.18.4.2. Water lines, gas lines, wire lines, service connections, water and gas meter boxes, water and gas valve boxes, light standards, cableways, signals, and all other utility appurtenances within the limits of the proposed construction which are to be relocated or adjusted, are to be moved by their respective owners except for those to be moved by the Contractor as specifically provided in the Contract Documents.

6.18.4.3. It is understood and agreed that the Contractor has considered in his proposal all of the permanent and temporary utility appurtenances in their present or relocated positions as if same are shown on the plans and that no additional compensation will be considered for any delays, inconvenience, or damages sustained by Contractor due to any interference from the said known utility appurtenances or the operations of moving them, except in the case of failure by a utility to reasonably comply with its responsibility in relocating or adjusting its facility as required.

6.18.4.4. Prior to commencing Work, the Contractor shall make arrangements to protect the properties of all public and private utilities and other property within and adjacent to the Work area, if indicated in the Contract Documents, from damage by his construction operations.

6.18.4.5. Contractor shall cooperate with the utility owners in the removal and rearrangement of any underground or overhead utility lines or facilities to minimize interruption to service and duplication of work by the utility owners.

6.18.4.6. In the event of interruption to water or other utility services as a result of accidental breakage, or as a result of being exposed or unsupported, the Contractor shall promptly notify the proper authorities and shall cooperate with them in the restoration of service as promptly as possible.

6.18.4.7. Fire hydrants shall be kept accessible to the Fire Department at all times and no Work shall be undertaken near fire hydrants until provisions for continued service have been made.

6.18.4.8. Contractor shall be responsible for the repair costs of any damage to utility facilities caused by his equipment or operations, except for underground facilities whose existence or approximate location was previously unknown.

6.18.5. Materials.

6.18.5.1. Source of Supply and Quality Requirements.

6.18.5.1.1. The materials used in the Work shall meet all quality requirements of the Contract Documents.

6.18.5.1.2. Unless otherwise provided in the Contract Documents, all materials used in the Work shall be furnished by the Contractor from sources selected by the Contractor.

6.18.5.1.3. Materials will be tested and approved when delivered to the Project or in their final position after incorporation to the Work as provided by the individual specifications.

6.18.5.1.4. At the option of the Owner's Representative, sources of materials may be given preliminary approval before delivery is started.

6.18.5.2. Procurement and Delivery of Materials.

6.18.5.2.1. The Contractor shall schedule the delivery at the Site of all materials and equipment required for the

execution and completion of the Work at a time convenient to him so as to avoid delays in the prosecution of the Work and to allow completion of the Work within the Contract Time specified in the Contract Documents.

6.18.5.3. Earthwork Material Sources.

6.18.5.3.1. Designated Sources.

6.18.5.3.1.1. Specific sources of materials from offsite or onsite locations may be designated on the Plans and described in the Contract Documents.

6.18.5.3.1.2. Unless otherwise provided in the Contract Documents, direct payment will be made for development, preparation, erosion control, hauling and restoration of material sources or related work areas and sites.

6.18.5.3.2. Contractor Sources.

6.18.5.3.2.1. When no materials sources are designated in the Contract Documents, or if the Contractor desires to use materials from sources other than those designated, the Contractor shall be responsible for acquiring the necessary rights to take materials from the sources selected, for determining that the materials meet the specified requirements, and he shall bear all expenses for the exploration, development, erosion control and restoration of such sources, and for all costs of hauling the materials. Contractor will make sure that his sources of materials have the required permits.

6.18.5.4. Contractor's Quality Control.

6.18.5.4.1. The Contractor is responsible for the quality of all materials and workmanship furnished in the construction of the Project.

6.18.5.4.1.1. If specifically required in the Supplementary General Conditions, the Contractor shall provide his own quality control system and procedures including all personnel, equipment, supplies and facilities necessary to obtain samples, perform tests, evaluate test results and adequately control his work in order to insure that all such materials and workmanship meet the Contract requirements.

6.18.5.4.2. The Contractor shall, in all instances, perform his own process control sampling, testing and inspection during all phases of the Work as often and at a rate sufficient to assure that the Work conforms to the Contract requirements.

6.18.5.4.2.1. The Contractor shall insure that all of the testing equipment to be used is properly calibrated and meets the specifications applicable to each specified test procedure.

6.18.5.4.3. The cost of complying with Contractor's quality control obligations referred to in Article 6.18.5.4 is included in the Contract Price and no additional payment will be made therefore.

6.18.5.5. Storage of Materials.

6.18.5.5.1. Materials shall be so stored as to assure the preservation of their quality and fitness for incorporation to the Work.

6.18.5.5.1.1. Stored materials, even though approved before storage, may again be inspected at any time prior to or during their incorporation to the Work.

6.18.5.5.1.2. Stored materials shall be located so as to facilitate their prompt inspection.

6.18.5.5.2. When authorized by the Owner's Representative, portions of the Project Site may be used for storage purposes and for the placing of the Contractor's plant/facilities and equipment provided that they are located so as not to constitute a hazard to the construction of the Project or otherwise.

6.18.5.5.2.1. Any additional space required therefore must be provided by the Contractor at his expense.

6.18.5.5.3. Private property may be used for storage purpose with written permission of the Owner or lessee, and, if requested by the Owner's Representative, copies of such written permission shall be furnished to him.

6.18.5.5.4. All temporary storage areas and plant sites shall be restored to their original condition by the Contractor, at his expense, in a manner acceptable to the Owner's Representative.

6.18.5.6. Handling of Materials.

6.18.5.6.1. All materials shall be handled in such manner as to preserve their quality and fitness for incorporation to the Work.

6.18.5.7. Materials Furnished by the Owner.

6.18.5.7.1. The Contractor shall furnish all materials required to complete the Work, except those indicated in the Contract Documents to be furnished by the Owner.

6.18.5.7.2. Except as provided in Article 6.18.5.7.4, if the material to be furnished by the Owner is to be delivered to the jobsite, the Owner, unless specified otherwise in the Contract Documents, will furnish the material to the Contractor at no cost to the Contractor and the Owner will pay for all transportation, insurance, taxes and other cost related to the furnishing of the material to the jobsite. Cost of unloading is included in the Contract Price and Contractor shall receive no additional compensation for unloading.

6.18.5.7.3. If the material to be furnished by the Owner is to be delivered to the jobsite, the Contract Documents will indicate the delivery schedule. If no such schedule is indicated, the delivery will be made as agreed by the parties. Owner shall program the delivery schedule as not to adversely affect the critical parth.

6.18.5.7.4. If the material to be furnished by the Owner is not to be delivered to the jobsite the Contract Documents will indicate the terms and conditions of said delivery. If no terms and conditions are included in the Contract Documents then the cost of delivery to the jobsite is not included in the Contract Price.

6.18.5.7.5. If the material to be furnished by the Owner is not to be delivered to the jobsite the Contract Documents will indicate the date and time of availability of the material. If no such date and time is indicated, the material will be available by agreement as not to impact the critical path.

6.18.5.7.6. The material to be furnished by the Owner will include all ancillary items included in the Technical

Specification that describes the material to be furnished by the Owner, unless indicated otherwise in the Contract Documents.

6.18.5.7.7. The Owner warrants that the materials furnished by the Owner to the Contractor are of a quality sufficient for the purpose of their use. The Owner further warrants that the material to be furnished is Equal or Similar to that specified in the Technical Specification that describes the material to be furnished by the Owner.

6.18.5.7.8. The material furnished by the Owner will be of sufficient quantity including normal construction breakage, waste and shrinkage to complete the Work, unless the Contract Documents indicate otherwise.

6.18.5.7.9. The Contractor will be responsible for all Owner furnished materials delivered or made available to him in accordance with the terms and conditions of this section. If due to the fault of the Contractor, the Owner has to supply more material to the Contractor than indicated in the Contract Documents, the Owner may deduct this cost from any Partial Payment or Retainage due to the Contractor.

6.18.5.7.10. If the Owner's Representative has informed in a timely manner, the date or schedule of delivery of the material, the Contractor will be liable for all demurrage charges if he fails to receive the Owner furnished material within the time limit or schedule specified.

6.18.5.7.11. Unless otherwise indicated in the Contract Documents, all costs at jobsite including unloading, handling, warehousing and Installation of the Owner furnished material are included in the Contract Price and Contractor shall not receive additional compensation therefore.

6.18.5.8. Certification of Compliance.

6.18.5.8.1. When a certification of a material or assembly is required by the Contract, each lot of such materials or assemblies delivered to the Site shall be accompanied by certificate of compliance in which the delivered material or assembly is clearly identified.

6.18.5.8.2. Commercially manufactured products shall be accompanied by certificates signed by the manufacturer and, when required, supported by tests performed by the manufacturer. Certified copies of such test results shall be furnished to the Owner's Representative.

6.18.5.8.3. Materials or assemblies accompanied by certificates of compliance may be sampled and tested at any time and if found not to be in conformity with Contract Documents will be subject to rejection at any time whether incorporated to the Work or not.

6.18.5.8.3.1. Removal of such rejected materials will be at the Contractor's expense, unless such materials have been supplied by the Owner and it was Owner’s duty to test for conformity with the Contract Documents.

6.18.6 Contractor shall carry on the Work and adhere as reasonably as possible to the Progress Schedule during all Disputes or disagreements with Owner.

6.18.6.1. If the Dispute or disagreement hinders the ability of the Contractor to carry on the Work, the Contractor shall so inform the Owner.

6.18.6.2. If the Dispute allows more than one course of action to be followed in the prosecution of the Work, the Owner's Representative may instruct the Contractor on the course of action to be followed.

6.18.6.3. No Work shall be delayed or postponed pending resolution of any Disputes or disagreements, except as permitted in section 15.4 or as Owner's Representative and Contractor may otherwise agree in writing.

6.18.7. Limitations on Operations.

6.18.7.1. Unless otherwise specified in the Contract Documents, the Contractor shall not open up new Work to the prejudice or detriment of Work already started.

6.18.7.1.1. In lineal projects, the Owner's Representative may require the Contractor to finish a section on which Work is in progress before Work is started on any additional section, if the opening of such section is essential to public safety or convenience.

6.18.7.1.2. If said order causes the Project to be delayed, the Contract Price and/or Contract Time shall be equitable adjusted.

6.19 Contractor's General Warranty and Guarantee

6.19.1. Contractor warrants and guarantees to Owner that all Work will be in accordance with the Contract Documents and will not be deficient. Contractor's warranty and guarantee hereunder excludes defects or damage after substantial, or partial completion and occupancy caused by:

6.19.1.1. abuse, modification, or improper maintenance or operation by persons other than Contractor, Subcontractors, Suppliers, or any other individual or entity for whom Contractor is responsible; or

6.19.1.2. normal wear and tear under normal usage by Owner or individuals or entities for whom Owner is responsible.

6.19.2. Contractor's obligation to perform and complete the Work in accordance with the Contract Documents shall be absolute. None of the following will constitute an acceptance of Work that is not in accordance with the Contract Documents or a release of Contractor's obligation to perform the Work in accordance with the Contract Documents:

6.19.2.1. observations by Architect/Engineer and/or Owner's Representative;

6.19.2.2. recommendation by Owner's Representative or payment by Owner of any progress or final payment;

6.19.3. the issuance of a certificate of Substantial Completion by Owner's Representative or any payment related thereto by Owner;

6.19.4. use or occupancy of the Work or any part thereof by Owner;

6.19.3. The Contractor warrants to the Owner that all materials and equipment furnished under this Contract will be new unless otherwise specified, and that all Work will be free from faults and defects and in conformance with the Contract Documents for the time periods specified in the Contract Documents or for one (1) year, whichever is longer, unless otherwise specified in the Contract Documents.

6.19.3.1. If required by the Owner's Representative, the Contractor shall furnish satisfactory evidence as to the kind

and quality of materials and equipment.

6.20 Indemnification

6.20.1. To the fullest extent permitted by Laws and Regulations, Contractor shall indemnify and hold harmless Owner, Architect/Engineer, Architect/Engineer's Consultants, and the officers, directors, partners, employees, agents, and other consultants and subcontractors of each and any of them from and against all claims, costs, losses, and damages (including but not limited to all fees and charges of engineers, architects, attorneys, and other professionals and all court or arbitration or other dispute resolution costs) arising out or relating to the performance of the Work, provided that any such claim, cost, loss, or damage:

6.20.1.1. is attributable to bodily injury, sickness, disease, or death, or to injury to or destruction of tangible property (other than the Work itself), including the loss of use resulting there from; and

6.20.1.2. only to the extent caused by any negligent act or omission of Contractor, any Subcontractor, any Supplier, or any individual or entity directly or indirectly employed by any of them to perform any of the Work or anyone for whose acts any of them may be liable.

6.20.2. The indemnification obligations of Contractor under section 6.20.1 shall not extend to the Architect/Engineer and Architect/Engineer's Consultants or to their officers, directors, partners, employees, agents, and other consultants and subcontractors of each and any of them arising out of:

6.20.2.1. errors and/or omissions in the preparation or approval of, or the failure to prepare or approve, maps, Drawings, opinions, reports, surveys, Change Orders, designs, or Specifications; or

6.20.2.2. giving directions or instructions, or failing to give them, if that is the primary cause of the injury or damage.

6.21 Subcontractors, Suppliers and Others

6.21.1. Award of Subcontracts for Portions of The Work.

6.21.1.1. Unless otherwise specified in the Contract Documents the Contractor, as soon as practicable after the signing of the Contract, shall furnish to the Owner's Representative in writing for his acceptance a list of the names of the main Suppliers and Subcontractors proposed for the principal portions of the Work.

6.21.1.1.1. The Owner's Representative shall promptly notify the Contractor in writing if he, after due investigation, has reasonable objection to any Supplier or Subcontractor on such list and does not accept him. Said reasonable objection may include, but are not limited to, previous default by said Subcontractor or Supplier with Owner, a record of flagrant safety violations or an unsatisfactory past performance with Owner.

6.21.1.1.1.1. The Owner's Representative shall specify in writing the reasons for such objection

6.21.1.1.1.2. If within fifteen (15) calendar days from submittal by the Contractor, the Owner's Representative fails to make objections to any Supplier or Subcontractor on the list, the Contractor shall request the approval of the list by the Owner's Representative who shall have ten (10) days to issue his decision. If no reply is forthcoming

from the Owner's Representative within the stated time, the list of Suppliers or Subcontractors shall be deemed approved.

6.21.1.1.2. The Contractor shall not contract with any Supplier or Subcontractor or any person or organization (including those who are to furnish materials or equipment fabricated to a special design) that has been rejected by the Owner's Representative in the manner indicated in Article 6.21.1.1.1, above.

6.21.1.1.3. If the Owner's Representative refuses to accept any Supplier, Subcontractor, person, or organization on a list submitted by the Contractor in response to the requirements of the Contract Documents, the Contractor shall submit an acceptable substitute.

6.21.1.1.3.1. No increase in the Contract Sum shall be allowed for any such substitution of a rejected Subcontractor and/or Supplier or other in accordance with Article 6.21.

6.21.1.1.3.2. No acceptance by Owner's Representative of any such Subcontractor, Supplier, or other individual or entity, whether initially, or as a replacement, shall constitute a waiver of any right of Owner's Representative or Engineer to reject defective Work.

6.21.1.1.4. Unless otherwise specified in the Contract Documents, the Contractor shall execute, with his own forces and organization, Work amounting to not less than twenty-five percent (25%) of the original total Contract Price.

6.21.1.1.4.1. Any items designated in the Contract Documents as "Specialty Trades or Items" shall be deducted from original total cost before computing the amount of the work required to be performed by the Contractor with his own forces and organization

6.21.2. Payments to Subcontractors.

6.21.2.1. The Contractor shall pay each Subcontractor for work performed in the Project in accordance with the terms and conditions stipulated in the contract executed by and between the Contractor and the Subcontractor.

6.21.2.1.1. The Contractor shall also require the Subcontractor to make similar payments to his Sub-Subcontractors.

6.21.3. Flow Down of Applicable Agreement Provisions.

6.21.3.1. The Contractor shall cause the inclusion, in all agreements executed by contractor with Subcontractors and Suppliers, of all applicable provisions of the Agreement with which Subcontractors and Suppliers need to comply for their proper performance on behalf of Contractor, of the duties and obligations imposed by the Contract Documents. Contractor shall also cause Subcontractor and Suppliers to include in their respective agreements with Sub-Subcontractors, and Sub-Suppliers the same duties to flow down to all lower tier agreements such applicable Agreement provisions.

6.21.4. The Contractor shall be considered as an independent contractor for all purposes under the Contract, and no persons engaged or contracted by the Contractor for the performance of Contractor's obligations shall be considered an employees or agents of the Owner.

6.21.5. Contractor shall be fully responsible to Owner's Representative, Owner and Architect/Engineer for all acts and omissions of the Subcontractors, Suppliers, and other such individuals or entities performing or furnishing any of

the Work.

6.21.5.1. Nothing in the Contract Documents shall create for the benefit of any Subcontractor or Supplier a contractual relationship between Owner's Representative, Owner or Architect/Engineer, nor shall it create any obligation on the part of Owner's Representative, Owner or Architect/Engineer to pay or to see to the payment of any moneys due any such Subcontractor, Supplier, or other individual or entity except as may otherwise be required by Laws or Regulations.

6.21.6. Contractor shall be solely responsible for scheduling and coordinating the Work of Subcontractors, Suppliers, and other such individuals or entities performing or furnishing any of the Work under a direct or indirect contract with Contractor.

6.21.7. Contractor shall require all Subcontractors, Suppliers, and such other individuals or entities performing or furnishing any of the Work to communicate with Owner's Representative only through Contractor.

6.21.8. All Work performed for Contractor by a Subcontractor or Supplier will be pursuant to an appropriate agreement between Contractor and the Subcontractor or Supplier that specifically binds the Subcontractor or Supplier to the applicable terms and conditions of the Contract Documents for the benefit of Owner's Representative, Owner and Architect/Engineer, including required contract provisions applicable to Federal Agency funded projects.

6.21.8.1. Whenever any such agreement is with a Subcontractor or Supplier who is listed as an additional insured on the property insurance provided in section 3.6, the agreement between the Contractor and the Subcontractor or Supplier will contain provisions whereby the Subcontractor or Supplier waives all rights (including subrogation) against Owner, Contractor, Architect/Engineer, Architect/Engineer's Consultants, and all other individuals or entities identified in the Contract Documents to be listed as insured or additional insured (and the officers, directors, partners, employees, agents, and other consultants and subcontractors of each and any of them) for all losses and damages caused by, arising out of, relating to, or resulting from any of the perils or causes of loss covered by such policies and any other property insurance applicable to Work.

6.21.8.1.1. If the insurers underwriting any such policies require separate waiver forms to be signed by any Subcontractor or Supplier, Contractor will obtain the same.

ARTICLE 7 - ARCHITECT/ENGINEER AND DESIGNATED INSPECTOR

7.1 Administration of the Contract

7.1.1. The Owner will provide general Administration of the Construction Contract, including performance of the functions hereinafter described, through the Owner's Representative.

7.1.2. The Owner, prior to the start of the Project, will inform the Contractor in writing the name of the Owner's Representative. If the Owner's Representative is changed during the course of the project the Owner will inform the Contractor in writing the name of the new Owner's Representative. If the Contractor has valid reasons for objecting said designation, Contractor shall so inform the Owner in writing and, if Owner deems Contractor’s reasons valid, a different Owner’s representative shall be chosen by the Owner.

7.1.3. The Owner may from time to time change the person or entity designated as Owner’s Representative or may assume and/or change the functions of the Owner's Representative and the Architect/Engineer by notifying the Contractor in writing.

7.2 Duties of Architect/Engineer and the Owner's Representative

7.2.1. The Architect/Engineer is the person or entity who prepares the Drawings and Specifications for the Owner and is responsible for the analysis, design, and code compliance of the Project.

7.2.1.1. The Architect/Engineer will make periodic visits to the site to familiarize himself generally with the progress and quality of the Work and to determine in general if the Work is proceeding in accordance with the Contract Documents.

7.2.1.1.1. Based on on-Site observations, the Architect/Engineer will keep the Owner informed of the progress of the Work, and will endeavor to safeguard the Owner against defects and deficiencies in the Work.

7.2.1.1.2. The Architect/Engineer will be the Owner's representative for technical matters related to the Contract.

7.2.1.1.3. The Architect/Engineer will be the primary interpreter of the plans and specifications.

7.2.1.1.4. The Architect/Engineer and Owner's Representative will not be responsible for the acts or omissions of the Contractor, or any Subcontractor and vice-versa, or any of their agents or employees, or any other persons performing any of the Work.

7.2.2. The Owner's Representative will represent the Owner in the interpretation of all contractual and non-technical matters. The Owner's Representative will have authority to act on behalf of the Owner to the extent provided in the Contract Documents.

7.2.2.1. All communications related to this Contract between the Contractor and Architect/Engineer shall be made thru the Owner's Representative, except that any party may directly communicate orally or by written communication with the others if authorized by the Owner's Representative, or in case of an Emergency.

7.2.2.2. The Owner's Representative may delegate some or all of his functions to Project Inspectors and/or Inspectors.

7.2.2.2.1. The Owner's Representative will inform the Contractor the name of the Project Inspectors and/or Inspectors. If the Contractor has a valid reason for not accepting the designated Project Inspector, he shall so inform the Owner in writing and if Owner deems the reason valid a different Owner’s representative shall be chosen by the Owner.

7.2.2.2.2. Inspectors employed by the Owner, the Architect/Engineer and/or the Owner's Representative are authorized to inspect all work done and materials furnished, including the preparation, fabrication or manufacture of the materials to be used.

7.2.2.2.3. Inspectors also have the authority to reject any materials and work until any questions at issue can be resolved.

7.2.2.3. Owner's Representative and/or inspectors are not authorized to alter or waive the provisions of the Contract, to issue instructions contrary to the plans and specifications, or to act as foremen for the Contractor.

7.2.2.4. Based on his observations and the Contractor's Application for Payment, the Owner's Representative

will determine the amount owed to the Contractor and will recommend approval of Payment in such amount.

7.2.2.4.1. If the Owner so requires, Architect/Engineer will also review, and approve, the Contractor's Application for Payment.

7.2.2.5. The Owner's Representative will prepare Change Orders, and Extra Work Orders, in accordance with these General Conditions.

7.2.3. The Owner's Representative, the Architect/Engineer and/or the Owner shall at all times have access to the Work either in preparation or in progress. The Contractor shall provide access to the Work so that at all times Owner's Representative may perform his duties under the Contract Documents, and Contractor shall provide such information and assistance, as is required, to make a complete and detailed inspections.

7.2.3.1. If the Owner's Representative, and/or the Owner, request it, the Contractor, at any time before Final Acceptance of the Work, shall remove or uncover such portions of the finished Work as instructed . After examination, the Contractor shall restore said portions of the Work to the standard required by the specifications.

7.2.3.1.1. Should the Work so exposed and examined prove acceptable, the uncovering, or removing, and the replacing of the covering will be paid by the Owner as extra work; but should the Work so exposed or examined prove unacceptable, the uncovering, removing, remediation and the replacing of the covering will be at the Contractor's expense.

7.2.3.1.2. Any Work done or materials used without supervision or inspection by an authorized Owner's representative may be ordered removed and replaced at the Contractor's expense unless the Owner representative failed to inspect after having been given a written notice of at least two (2) Working Days prior to the date in which Work was performed.

7.2.3.1.3. When any government agency or any utility is to accept or pay for any portion of the Work, its respective representatives shall have the right to inspect the Work. Such inspection shall not make the government agency or utility a party to the Contract. Contractor and Owner shall diligently perform all necessary actions to promote the timely inspection of the Work in a manner that does not affect the critical path.

7.2.3.1.4. The inspection of the Work and materials by the Owner shall not release the Contractor of any of his obligations under the Contract as prescribed in the plans, specifications and other Contract Documents.

7.2.3.1.5. The Owner's Representative will conduct inspections to determine the dates of Substantial Completion and final completion and will receive and review written guarantees and related documents submitted by the Contractor.

7.2.3.1.6. In case of any dispute between the Contractor and any one Project Inspector or Inspector as to materials furnished or the manner of performing the Work, the Project Inspector or the Inspector shall have the authority to reject materials or suspend the work until the question at issue can be referred to and decided by the Owner's Representative, within reasonable promptness, so at not to alter the critical path or modify substantially the float and the programmed progress of the job.

7.2..4. The Owner's Representative will be, in the first instance, the interpreter of the requirements of the Contract Documents, except as indicated in Article 7.2.1.3. The Owner's Representative will, within a reasonable time, render such interpretations that he, or the Contractor, if so requested, may deem necessary for the proper execution or progress of the Work.

7.2.4.1. All interpretations and decisions of the Owner's Representative shall be consistent with the intent of the Contract Documents. In his capacity as interpreter, he will exercise his best efforts to insure faithful performance under the Contract.

7.2.4.2. Claims, disputes and other matters in question relating to the execution or progress of the Work or the interpretations of the Contract Documents shall be submitted initially to the Owner's Representative for a decision in accordance with Article 11.

7.2.5. The Owner's Representative will have authority to reject work only when such work does not conform to the Contract Documents. Whenever, in his reasonable opinion, he considers it necessary or advisable, to insure the proper implementation of the intent of the Contract Documents, he will have authority to require special inspection or testing of the Work in accordance with Article 12.3 whether or not such Work is then fabricated, installed or completed.

7.2.5.1. However, neither the Owner's Representative's authority to act under this Article, nor any decision made by him in good faith either to exercise or not to exercise such authority, shall give rise to any duty or responsibility of the Owner, Owner's Representative or Architect/Engineer to the Contractor, any Subcontractor, any of their agents or employees, or any other person performing any of the Work, nor will the Contractor be released from any of his obligations under the Contract.

7.2.5.1.1. The Owner's Representative shall have the authority to stop the Work in whole or in part when such stoppage is necessary to insure the proper execution of the Work and compliance by contractor with the Contract.

ARTICLE 8 - OTHER WORK AND SEPARATE CONTRACTS

8.1 Owner's Right to Award Separate Contract, Perform Work with Owner's Employees and Utility Workers. Related Work at Site

8.1.1. Owner's Right to Award Separate Contract, Perform Work with Owner's Employees and Utility Workers.- Owner may perform other work related to the Project at the Site with Owner's employees, or by awarding separate contracts, or by having the work performed by utility workers. Written notice thereof will be given to Contractor prior to starting any such other work.

8.1.1.1. If the terms and conditions of the work to be performed by Owner's employees, separate contractors or by others, are not described in the Contract Documents prior to the bid, the Contract Time and Sum will be equitably adjusted as a result of said work and any other work to the extent that such work performed by Owner's employees, separate contracts or by others affects the Contractor's Work.

8.1.1.2. If the terms and conditions of the work to be performed by Owner's employees, separate contractors or by others are described in the Contract Documents prior to the bid, then the Contract Time and Sum will be equitably adjusted but only to the extent that said work differs from the work indicated in the Contract Documents that is to be performed by Owner's employees, separate contractors or by others.

8.1.1.3. Should the performance of other work related to the Project at the Site by Owner's employees, separate contractors, utility workers, that was not indicated in the Contract Documents, cause damages, delays or interferes with the Work being performed by the Contractor, the Owner will assume full responsibility and pay for all costs, expenses, and delays to which the Contractor is subjected caused by the execution and/or

performance of said other work described herein if the critical path is adversely affected.

8.1.1.4. In the event one or more contracts are awarded related to the Project, the "contractor" in the contract document in each case, will be the contractor who signs each separate contract.

8.1.1.5. If there is under construction other work for Owner,by written contract or otherwise, adjacent to the limits of the site, the Contractor, if so ordered by the Owner, shall permit access to others performing such work through the Site.

8.1.1.5.1. If Owner authorizes the other contractors performing work adjacent to the Site to use said access Owner shall prescribe limitations and conditions for such use as required to protect Contractor's operations and the Work.

8.1.1.5.1.1. In accordance with this Article 8.1, the Owner will be responsible for any damages, costs, or delays caused to the Contractor by such order.

8.1.1.6. If Owner and Contractor are unable to agree on entitlement to or on the amount or time, if any, of any adjustment in the Contract Price or Contract Time necessary as a result of such other work, a Claim may be made therefore as provided in Article 11.5.

8.1.2. Coordination of the Separate Contracts and Work by Others.

8.1.2.1. Unless otherwise specified in accordance with Article 8.1.2.4, Owner shall be responsible for the coordination of the Work between the Contractor, Owner's employees, the separate contractors and any others, as to the interaction and scheduling of the various work and the proper and safe access to the Site and storage of the equipment and materials of the Contractor, the Owner's employees, the separate contractors and others contracted by Owner.

8.1.2.2. Contractor shall fully cooperate with the Owner in the coordination of the Contractor's Work with that of the Owner's employees, the separate contractors and any work by others as to the interaction and scheduling of the various work and the proper and safe access to the Site and storage of the equipment and materials of the Contractor, the separate contractors and others.

8.1.2.3. The Owner may delegate this coordination, in whole or in part, to a Construction Manager or separate contractor and must give prior notice to Contractor in writing, containing the terms and conditions of this delegation.

8.1.2.3.1. The Construction Manager or the separate contractor will act on behalf of Owner strictly within the limits of such delegation.

8.1.2.4. The Owner may delegate this coordination responsibility in whole or in part to one of the separate contractors or to the Contractor as follows:

8.1.2.4.1. If prior to the bid opening date, the Owner requires that the Contractor be responsible for the coordination of the Owner's employees, separate contracts or any work by others, the Owner will indicate the terms and conditions of such obligation in the bid documents and it shall be the Contractor's responsibility to include in the Contract Price whatever costs are required for this coordination of the work.

8.1.2.4.2. If the Owner requires that Contractor be responsible for the coordination of Owner's employees, separate contracts or work by others after the bid has been awarded, the Owner will indicate the terms and conditions of such obligation as a Change Order.

8.1.2.5. Contractor Coordination Meetings:

8.1.2.5.1. If the Owner, or the party with the coordinating responsibility so requires it, the Contractor shall attend coordination meetings with the Owner's employees, separate contractors or others performing work at a site to be determined by the coordinator.

8.1.2.5.1.1. The purpose of the coordination meeting shall be for the Contractor and all separate contractors and/or others performing work to coordinate schedules and construction activities to enable the construction of the different work under the separate contracts to occur on a coordinated, efficient and expeditious manner.

8.1.2.5.1.2. The coordination meeting shall also serve as forum for the Contractor and all separate contractors and/or others performing work at the site to discuss, and try to avoid and try to resolve between and among themselves any conflicts in their respective schedules or construction activities and prevent delays in one contractor's activities caused by another.

8.1.2.5.2. If the different contractors cannot reach an agreement on the coordination of the construction activities and schedule to be followed, the Owner, or his designated coordinating representative, will decide on the course of action to be followed and shall provide the necessary instructions to the Contractor, Owner's employees, separate contractors and others performing work on how to proceed, as a Field Order or, if required, as a Change Order.

8.1.3. Contractor, and any other entity contracted by the Owner to perform direct work related to the Project, shall do all cutting, fitting, and patching of the Work that may be required to properly connect or otherwise make its several parts come together and properly integrate such other work with the work of the Contractor or any other entity contracted by the Owner to perform related work on the Project.

8.1.3.1. Contractor, or any other entity contracted by the Owner to perform related work on the Project, shall not endanger any work of others by cutting, excavating, or otherwise altering their work and will only cut or alter their work with the written consent of Owner and the others whose work will be affected.

8.1.4. The duties and responsibilities of Contractor under this Article are for the benefit of such utility owners and separate contractors to the extent that there are comparable provisions for the benefit of Contractor, including general, supplemental and special conditions, as well as similar insurance and hold harmless clauses, in said direct contracts between Owner and such utility owners and separate contractors.

8.1.4.1. Furthermore, the Owner will verify that the schedule of others contracted to perform related work on the Project does not interfere with the Project Schedule.

8.1.4.1.1. If in order to accommodate the work performed by others contracted by the Owner to perform related work in the Project, the critical path is adversely affected and/or any damage to the Work occurs, the Owner will compensate the Contractor in time and/or adjustment to Contract Price.

8.1.5. If the proper execution or results of any part of Contractor's Work depends upon work performed by others under this Article, Contractor shall promptly inspect such other work and, within ten (10) working days, report

to Owner in writing any delays, defects, or deficiencies in such other work that, in his opinion, render it unavailable or unsuitable for the proper execution and results of the Work.

8.1.5.1. Contractor's failure to report will constitute acknowledgement that said work is suitable, except for hidden latent defects in such work.

8.1.5.2. The same rules stated herein will apply if other entities contracted by the Owner to perform related work in the Project depend on Work performed by the Contractor.

8.2 Owner's Right to Award Separate Contract.

8.2.1. The Owner may award separate contracts in connection with other portions of the Project or additional work to the Work covered by the Contract, and if such work affects the Work, Contractor will be notified by Owner in a timely manner of the award of such separate contract.

8.2.1.1. The Owner may assign these separate contracts, as a Change Order, to the Contractor for a fee, as indicated on Article 10.5.

8.2.2. When Separate Contracts are let within the limits of any project, the Owner shall coordinate the work of each contractor so as not to interfere with or hinder the progress or completion of the Work being performed by Separate Contractors.

8.2.2.1. Contractors working on the same Project shall fully cooperate with each other.

8.2.2.2. Furthermore, the Owner will be responsible to verify that the schedule of the Separate Contractors contracted to perform Work on the Project does not interfere with the Contractor's Project Programmed Schedule previously approved for the Project.

8.2.2.2.1. Owner will compensate the Contractor, in time and/or adjustment to Contract Price, if his schedule has to be varied, and/or any damage occurs, to accommodate the work performed by other entities contracted by the Owner to perform related work in the Site.

8.3 Mutual Responsibility of Contractors

8.3.1. Each Contractor involved shall assume all liability, financial or otherwise, in connection with his Contract and shall protect and save harmless the Owner from any and all damages or claims that may arise out of the performance of the Contractor's Work.

8.3.1.1. The Owner will require from each Separate Contractor and other entities working on the Project, Contract Documents, including General, Supplemental and Special Conditions, similar to those executed with the Contractor and to include similar insurance clauses and hold harmless clauses.

8.3.1.2. The Owner will also be responsible to verify that the schedule of the Separate Contractors) and other entities working on the project do not interfere with the Contractor's Project Programmed Schedule previously approved for the Project.

8.3.2. Should the Contractor cause damage to the work or property of any separate contractor and/or others working on the Project, the Contractor shall, be liable for said damage.

8.3.2.1. If such other separate contractor files a claim against Owner on account of any such damage alleged to have been so sustained, Contractor shall have the right to defend Owner, either by itself or in conjunction with Owner, and Contractor shall compensate Owner for damages, costs and expenses sustained therefore by Owner which are attributable to Contractor.

8.3.2.1.1. If the Contractor is found to be responsible for the alleged defects claimed by the separate contractor and any judgment or award against the Owner arises therefrom, the Contractor shall pay or satisfy it and shall reimburse the Owner for all attorney's fees and court, arbitration costs or other costs which the Owner has therefore incurred.

8.3.2.1.2. If the Contractor is found not to be responsible for the alleged defects claimed by the separate contractor, then the Owner shall pay for any judgment or award against him as well as reimburse the Contractor for all attorney's fees and court or arbitration costs incurred in defending the Owner.

ARTICLE 9-TIME

9.1 Progress and Completion

9.1.1 All time limits stated in the Contract Documents are of the essence of the Contract.

9.1.2 The time limit for the execution of this Contract has been figured out based on the Architect/Engineer and/or Owner's estimate.

9.1.2.1. Such time limit to into consideration all Sundays, legal holidays indicated in Article 1.1.1.4,1, included within the said time limit.

9.1.2.2. The Contractor will be entitled to work premium time (overtime) as required to comply with the schedule of the Project.

9.1.2.2.1. No work shall be performed on Saturdays, Sundays or legal holidays, except in cases of emergency, or unless prior written permission has been granted by the Owner's Representative.

9.1.2.2.1.1. Except in cases of emergency, request for permission to Work on Saturdays, Sundays or legal holidays shall be filed with the Owner's Representative not less than twenty four (24) hours in advance of said date, if the activity affects the critical path and not less than forty eight (48) hours if the proposed activity does not affect the critical path.

9.1.2.2.1.2. Said permission shall not be unreasonably denied.

9.1.2.2.2. Premium time (overtime) necessary in case of emergency, or for completion of daily work, or to comply with the Project schedule, shall be notified to the Project Inspector during the course of the day that said premium time will be worked.

9.1.3. The date of commencement of the Work shall be stated in the Notice to Proceed.

9.1.3.1. The Contractor shall begin the Work on such date of commencement fixed by the Notice to Proceed.

9.1.3.2. The Contractor shall carry out the Work expeditiously with adequate forces and shall complete it within the Contract Time

9.1.3.3. A Notice to Proceed issued without the Owner having furnished all required permits and/or endorsements necessary to commence the Work which fixes a commencement date which cannot be complied with due to the lack of such permits shall constitute a valid basis for a claim by Contractor under Article 11.5 if such act adversely affects the Project's critical path and no concurrent cause of delay by the Contractor is present.

9.1.4. The Contract Time limit to execute the Work until it is substantially complete shall be that number of calendar days resulting from the sum of the original Contract Time and the authorized extensions to the original Contract Time. Said Contract Time shall start to run on the date fixed in the Notice to Proceed (the commencement date) and shall end on the date of Substantial Completion. If the work is Substantially Completed prior to said time limit, the Contractor will have achieved early completion, if Work is not Substantially Completed within said time limit, the Contractor will not have completed the Work on time in accordance with the Contract.

9.1.4.1. Time under the Contract will, stop running on the date of Substantial Completion.

9.2 Change of Contract Time

9.2.1. The Contract Time (or Milestones) may only be changed with a Change Order, Extra Work Order or by a Written Amendment.

9.2.1.1. Any Claim for an adjustment in the Contract Time (or Milestones) shall be based on a written notice submitted by the party making the claim to the Owner in accordance with the provisions of Article 11.5.

9.2.2. Any adjustment of the Contract Time (or Milestones) due to any delay beyond the control of Contractor, will be made in an amount equal to the time lost due to such delay, including its consequences, if a Claim is made therefore as provided in Article 11.5 only if such delay affect the critical path, as reflected in the monthly Progress Schedule.

9.2.2.1. Delays beyond the control of Contractor shall include, but are not limited to, acts or neglect by Owner, acts or neglect of utility owners or other contractors performing other work as contemplated on these General Conditions, lack of, or lapse, of any permit, or endorsement, issued by the governmental entities having jurisdiction in the Project which are the responsibility of Owner, fires, floods, epidemics, weather conditions, or acts of God.

9.3 Delays and Extensions of Time

9.3.1. No extension of the Contract Time will be allowed for any reason except as provided below:

9.3.1.1. If satisfactory fulfillment of the Contract with authorized extension and increases requires the performance of Work in greater quantities than those set forth in the proposal so that the total final payment is greater than the total original Contract Price, then the time allowance will be equitably adjusted taking into account the amount and difficulty of the additional Work and only if the scope of the Work is increased or the critical path of the Project Schedule is affected.

9.3.1.2. In case of total suspension ordered by the Owner and not due to any fault of the Contractor, the total number of calendar days during which the Work is suspended shall be added to the Contract Time. In case of suspension of part of the Work ordered by the Owner not due to any fault of the Contractor, the Contract Time shall be extended to the extent that the effect that such suspension has on the Contract Time, and only to the extent the critical path of the Project Schedule is affected.

9.3.1.2.1. After Contractor has taken all reasonable steps to minimize Project overhead during the suspension, the Project fixed overhead costs incurred during the suspension by the Contractor will be reimbursed to Contractor by the Owner.

9.3.1.3. In case of damage to the Work due to Force Majeure, the Owner shall equitably adjust Contract Time based on the time required to repair the damage, provided the critical path is affected.

9.3.1.4. In case of delays or interruptions to the Work caused by any act of the Owner, or by any separate Contractor employed by the Owner or by any other cause not attributable to the fault or negligence of the Contractor, then the Contract Time shall be equitably adjusted.

9.3.1.4.1. The Project reasonable fixed overhead costs incurred by the Contractor due to the time extension caused by the acts described in Article 9.3.1.4 ,will be reimbursed to the Contractor by the Owner.

9.3.1.5. Every Change Order, Extra Work Order or Supplemental Agreement, if any, shall include all adjustments to Contract Time and to Contract Price related thereto, if any.

9.3.1.6. Unless otherwise specified in the Contract Documents, additional Contract Time will be allowed due to weather conditions, and their consequences, which render the performance of Work impossible.

9.3.1.7. Except as otherwise stated in this Article 9, where Contractor is prevented from completing any part of the Work within the Contract Time (or Milestones) due to delays beyond the control of both Owner and Contractor, if the critical path of the Project Schedule is affected, an extension of the Contract Time (or Milestones) for a period of time equal to the time lost due to such delay shall be Contractor's sole and exclusive remedy for such delay.

9.3.2. Extension in Contract Time shall not be considered or allowed for the following reasons:

9.3.2.1. Suspensions of Work ordered by the Owner or Owner's Representative due to the fault of the Contractor or his Subcontractor.

9.3.2.2. Unauthorized suspensions of Work by the Contractor.

9.3.2.3. Delays within the control of Contractor.

9.3.2.3.1. Delays attributable to or within the control of a Subcontractor or Supplier shall be deemed to be delays within the control of Contractor.

9.3.3 All notifications of claims for extension of time shall be made in writing by the Contractor to the Owner's Representative not more than thirty (30) working days after acquiring knowledge of the occurrence of the delay. Once made, the Contractor must supplement such claim by notice to Owner within thirty (30) working days after the

event that caused the delay has concluded. If proper notification of a claim or subsequent supplemental notice is not given to Owner, then all related claims regarding increases to Contract Time, and Contract Price will be deemed waived by Contractor.

9.3.3.1. Claims for extension of time shall include:

9.3.3.1.1. the reasons for the time extension as required by the Owner's Representative;

9.3.3.1.2. the operation(s) alleged to have been delayed;

9.3.3.1.3. the calendar dates on which the operation(s) were delayed;

9.3.3.1.4. the number of calendar days by which Contractor requests Contract Time be extended;

9.3.3.1.5. a complete and detailed statement as to how the critical path was affected; and

9.3.3.1.6. a complete and detailed breakdown of adjustment to Contract Price to be claimed due to the claimed time extension, if adjustment to Contract Price is to be claimed.

9.4 Delay Damages

9.4.1. In no event shall Owner or Architect/Engineer be liable to Contractor, any Subcontractor, any Supplier, or any other person or organization, or to any surety for or employee or agent of any of them, for damages arising out of or resulting from:

9.4.1.1. delays caused by or within the control of Contractor; or

9.4.1.2. delays caused by Force Majeure and/or beyond the control of both Owner and Contractor .

9.4.1.3. delays not notified within the time specified in Article 9.3.3 or contrary to Article 9.3.3.1.

9.4.2. Nothing in this Article 9 bars a change in Contract Price to compensate Contractor due to delay, interference, or disruption directly attributable to actions or inactions of Owner or anyone for whom Owner is responsible, provided Contractor complies with the requirements of Articles 9.3.3. and 9.3.3.1.

9.5 Liquidated Damages

9.5.1. Unless otherwise specified in the Contract Documents should the Contractor or, the Surety in case of Termination for Cause, fail to complete all the Work within the time specified in the Contract or as extended by the written authorization of the Owner, a deduction of the amount stipulated herein will be made for each and every calendar day that the Work is not completed after the expiration of the time limit to execute the Work described in Article 9.1.4:

SCHEDULE OF LIQUIDATED DAMAGES

Original Contract Price		Daily Charge
From More Than	To and Including	
$ 0.00	$ 99,999.99	$ 300.00
$ 100,000.00	$ 499,999.99	$ 400.00
$ 500,000.00	$ 999,999.99	$ 800.00
$ 1,000,000.00	$ 1,999,999.99	$ 1,000.00
$ 2,000,000.00	$ 4,999,999.99	$ 2,000.00
$ 5,000,000.00	$ 9,999,999.99	$ 3,000.00
$ 10,000,000.00	$19,999,999.99	$ 4,000.00
$ 20,000,000.00	$29,999,999.99	$ 5,000.00
$ 30,000,000.00	$39,999,999.99	$6,000.00
$ 40,000,000.00	$49,999,999.99	$7,000.00
Over $50,000,000.00	Unlimited	$8,000.00 or as otherwise indicated in the Special Conditions

9.5.2. This amount will be deducted from any money due or that may become due the Contractor or his Surety by Owner.

9.5.3. The Original Contract Price in the above schedule of Liquidated Damages for unit price projects refers to the total original contract amount including all the units in a multi-unit contract. Liquidated damages will be applied on multi-unit contracts based on the daily charges applicable to the total original contract amount.

9.5.4. The amount stipulated in Article 9.5.1, or otherwise if otherwise specified in the Contract Document, as the case may be, shall be considered and treated not as a penalty, but as a total, fixed, and agreed upon liquidated damages due the Owner by the Contractor or, by the Surety in case of Termination for Cause, for and including but not limited to, public inconvenience, obstruction to traffic, interference with and/or loss of business, increase of engineering, inspection and administrative cost to the Owner; and other costs and expenses which have caused an expenditure of public funds, resulting from the Contractor's, or in case of Termination for Cause of the Surety's, failure to complete the work within the time specified in the Contract.

9.5.5. Permitting the Contractor to continue and finish the Work or any part thereof after expiration of the time limit for Substantial Completion described in Article 9.1.4 shall in no way operate as a waiver of any right or remedy available to Owner under this Contract or at law.

9.6 Early Completion Incentive

9.6.1. Unless otherwise stated in the Contract Documents, should Contractor Substantially Complete the Work before expiration of the Contract Time as extended by the Owner, the Contractor shall receive an incentive pay

from the Owner equal to one half (1/2) of the stipulated liquidated damages for each calendar day the Work is Substantially Completed prior to the time limit to complete the Work described in Article 9.1.4.

ARTICLE 10 - CHANGE OF CONTRACT PRICE, COST OF THE WORK AND UNIT PRICE WORK

10.1 Change of Contract Price

10.1.3. The Contract Price may only be changed by a Change Order or by a Written Amendment. Any Claim for an adjustment in the Contract Price shall be based on written notice submitted by the party making the Claim to the Owner in accordance with Article 11.5.

10.1.2. The value of the Work covered by a Change Order or covered by a Claim for an adjustment in the Contract Price will be determined as follows:

10.1.2.1. where the Work involved is covered by unit prices contained in the Contract Documents, by application of such unit prices to the quantities of the items involved (subject to the provisions of section 10.4); or

10.1.2.2. where the Work involved is not covered by unit prices contained in the Contract Documents, by a mutually agreed lump sum (which may include an allowance for overhead and profit not necessarily in accordance with section 10.5) or by newly agreed unit prices; or

10.1.2.3. where the Work involved is either: (a) not covered by unit prices contained in the Contract Documents, or (b) agreement as to a lump sum is not reached (under Article 10.1.2.2,) the value of the work shall be computed on the basis of the Cost of the Work (determined as provided in Article 10.2) plus a Contractor's fee for overhead and profit (as provided in Article 10.5).

10.2 Cost of the Work

10.2.1. Costs Included: The term Cost of the Work means the sum of all costs necessarily incurred and paid by Contractor in the proper performance of a change in the Work. When the value of any Work covered by a Change Order, Extra Work Order or Construction Change Directive or when a Claim for an adjustment in Contract Price is determined on the basis of Cost of the Work, the costs to be reimbursed to Contractor will be only those additional or incremental costs required because of the change in the Work. Except as otherwise agreed in writing by Owner's Representative, such costs shall be in amounts no higher than those prevailing in the locality of the Project and shall include only the items indicated below:

10.2.1.1. Payroll costs for employees in the direct employ of Contractor in the performance of the Work under schedules of job classification agreed upon by Owner's Representative and Contractor.

10.2.1.1.1. Such employees shall include without limitation engineers, superintendents, foremen, and other supervisory, safety, security and clerical personnel employed full time at the Site.

10.2.1.1.2. Payroll costs for employees not working exclusively in connection with the Work shall be apportioned based on their time spent working on the Work.

10.2.1.1.3. Payroll costs shall include, but shall not be limited to, salaries and wages plus the cost of fringe benefits, which shall include social security contributions, unemployment, excise, and payroll taxes, workers' compensation, union, health and retirement benefits, bonuses, sick leave, vacation and holiday pay applicable

thereto.

10.2.1.1.4. The expenses of performing Work outside the regular working hours, on Saturday, Sunday, or legal holidays, shall be included in the above mentioned costs, to the extent authorized by Owner's Representative.

10.2.1.2. Actual cost of all necessary materials and equipment furnished and incorporated in the Work, including costs of transportation, taxes and reasonable and necessary storage thereof, and Suppliers' field services required in connection therewith.

10.2.1.2.1. All cash discounts with regard to the purchase by Contractor of materials and equipment shall accrue for the benefit of Contractor unless Owner deposits funds with Contractor with which to purchase the materials and equipment, in which case the cash discounts shall accrue to Owner.

10.2.1.2.2. All trade discounts, rebates, and refunds and returns from sale of surplus materials and equipment shall accrue to Owner, and Contractor shall make provisions so that these discounts etc. may be obtained.

10.2.1.3. Payments made by Contractor to Subcontractors for Work performed by Subcontractors.

10.2.1.3.1. If required by Owner's Representative, Contractor shall obtain competitive bids from subcontractors acceptable to Owner and Contractor and shall deliver such bids to Owner, who will then determine, with the advice of Architect/Engineer, which bids, if any, will be acceptable.

10.2.1.3.2. If any subcontract provides that the Subcontractor is to be paid on the basis of Cost of the Work plus a fee, the Subcontractor's Cost of the Work and fee shall be determined in the same manner as Contractor's Cost of the Work and fee as provided in this Article 10.2.

10.2.1.4. Reasonable and necessary costs of special consultants (including but not limited to engineers, architects, testing laboratories, surveyors, attorneys, and accountants) employed for services exclusively related to the Work.

10.2.1.5. Supplemental costs including the following:

10.2.1.5.1. The proportion of reasonable and necessary transportation, travel, and subsistence expenses of Contractor's employees incurred in discharge of duties connected with the Work. Airplane travel shall be on coach class and the car transportation, hotel and subsistence shall be at moderate cost.

10.2.1.5.2. Reasonable cost, including transportation, taxes and maintenance, of all materials, supplies, equipment, machinery, appliances, computers, office, warehousing and temporary facilities exclusively related to the Contract, and cost, less market value, of such items used but not consumed which remain the property of Contractor.

10.2.1.5.3. Rentals of all construction equipment and machinery, and the parts thereof whether rented from Contractor or others in accordance with rental agreements approved by Owner's Representative with the advice of Architect/Engineer, and the costs of transportation, loading, unloading, assembly, dismantling, and removal thereof.

10.2.1.5.3.1. All such costs shall be in accordance with the terms of said rental agreements.

10.2.1.5.3.2. The rental of any such equipment, machinery, or parts shall cease when the use thereof is no longer necessary for the Work.

10.2.1.5.4. Sales, consumer, use, and other similar taxes related to the Work, and for which Contractor is liable, imposed by Laws and Regulations.

10.2.1.5.5. In such instances (only) where Contractor is insured under OCIP, or where the Owner assumes responsibility for some part of the required projects insurances (such as Builder's Risk) losses and damages (and related expenses) caused by damage to the Work, not compensated by said insurance, sustained by Contractor in connection with the performance of the Work, provided such losses and damages have resulted from causes other than the negligence of Contractor, any Subcontractor, or anyone directly or indirectly employed by any of them or for whose acts any of them may be liable.

10.2.1.5.5. 1. Such losses shall include settlements made with the written consent and approval of Owner's Representative. No such losses, damages, and expenses shall be included in the Cost of the Work for the purpose of determining Contractor's fee.

10.2.1.5.6. The cost of all utilities, telephone, data, fax, internet, security services, fuel, and sanitary facilities within the Site.

10.2.1.5.7. When the Cost of the Work is used to determine the value of a Change Order, or Construction Change Directive, Extra Work Order or of a Claim, the cost of premiums for additional Bonds and insurance required because of the changes in the Work.

10.2.1.5.8. An amount of the Contractor's main office overhead costs, when applicable, reached by mutual accord between the parties. If no mutual accord can be reached, the cost for main office overhead shall be computed using the Eichleay case and subsequent case law. If the Contractor does not have financial statements prepared externally by a recognized CPA, he must prepare them in order to be able to present a claim for this purpose.

10.2.2 Costs Excluded: The term Cost of the Work shall not include any of the following items:

10.2.2.1. Payroll costs and other compensation of Contractor's officers, executives, principals (of partnerships and sole proprietorships), general managers, engineers, architects, estimators, attorneys, auditors, accountants, purchasing and contracting agents, expediters, timekeepers, clerks, and other personnel employed by Contractor who work at Contractor's principal, branch or other office, other than Contractor's office at the Site, for general administration of the Work, all of which are to be considered administrative costs covered by the Contractor's fee, and not specifically included in the agreed upon schedule of job classifications referred to in Article 10.2.1.1 or specifically covered by Article 10.2.1.4.

10.2.2.2. Expenses of Contractor's principal, branch or other offices, other than Contractor's office at the Site.

10.2.2.3. Any part of Contractor's capital expenses, including interest on Contractor's capital employed for the Work and charges against Contractor for delinquent payments.

10.2.2.4. Costs due to the negligence of Contractor, any Subcontractor, or anyone directly or indirectly employed by any of them or for whose acts any of them may be liable, including but not limited to, the correction

of defective Work, disposal of materials or equipment wrongly supplied, or making good any damage to property.

10.2.2.5. Other overhead or general expense costs of any kind and the costs of any item not specifically and expressly included in Articles 10.2.1.1 and 10.2.1.2, unless proven as a valid reasonable and necessary expense directly and exclusively related to the Project.

10.2.3. Contractor's Fee. When the value of any Work covered by a Change Order/Extra Work Order or when a Claim for an adjustment in Contract Price is determined on the basis of Cost of the Work, Contractor's fee shall be determined as set forth in Article 10.5.

10.2.4 Documentation: Whenever the Cost of the Work for any purpose is to be determined pursuant to Articles 10.2.1 and 10.2.2, Contractor will establish and maintain records thereof in accordance with generally accepted accounting practices and submit in a form acceptable to Architect/Engineer, or Owner's Representative, an itemized cost breakdown together with supporting documentation and data.

10.2.5 Time Extension: Whenever additional time is required to perform extra work, said time allotment shall be included as part of the Change Order.

10.2.6 If the requirement specified in Article 10.1.2.3, above, causes a delay in the project completion, the costs of said delays, including project and main office overhead shall be added to the cost of the Work and a reasonable time extension provided under the Contract.

10.3 Cash Allowances

10.3.1 Unless otherwise stated in the Contract Documents, it is understood that Contractor has included in the Contract Price all allowances so named in the Contract Documents.

10.3.2 Items covered by allowances shall be supplied for such amount and by such persons or entities as the Owner's Representative may direct, but the contractor shall not be required to employ persons or entities against which the Contractor makes written reasonable objections.

10.3.3 If the allowance covers the cost of only furnishing material or , the allowance should include:

10.3.3.1. The cost to Contractor (less any applicable discounts) of materials and equipment required by the allowances to be delivered at the Site, and all applicable taxes; and

10.3.3.2. Contractor's costs for unloading and handling on the Site. Labor and installation costs, have been included in the Contract Price.

10.3.4 If the allowances include the cost of furnishing and installing material or equipment to be furnished and installed by the Contractor the allowances include the cost to Contractor (less any applicable discounts) of materials and equipment required by the allowances to be delivered at the Site, and all applicable taxes plus the total cost of installation including unloading and handling.

10.3.5 If the allowances include the cost of furnishing and installing material or equipment to be furnished and installed by a Subcontractor the allowances include the cost to the Contractor of the subcontractor's price.

10.3.6 Unless otherwise provided in the Contract Documents, insurances and bonds do not form part of the

allowance price, but are included as part of the Contract Price.

10.3.7 An appropriate Change Order/Extra Work Order will be issued to reflect any difference in the actual cost of the allowance versus the amount specified in said allowance in the Contract Documents. Said amount will be due to Contractor, or credited to Owner as the case may be, on account of Work covered by allowances, and the Contract Price, and Contract Time, if necessary, shall be correspondingly equitably adjusted. Said Change Order/Extra Work Order will include the costs of bonds, insurances and fee stated in Article 10.5. If the change order is a credit, the amount credited will be the net amount due the Owner.

10.4 Unit Price Work

10.4.1 Where the Contract Documents provide that all or part of the Work is to be Unit Price Work, initially the Contract Price will be deemed to include, for all Unit Price Work, an amount equal to the sum of the unit price for each separately identified item of Unit Price Work times the estimated quantity of each item as indicated in the Agreement.

10.4.1.1. The estimated quantities of items of Unit Price Work are not guaranteed and are solely for the purpose of comparison of bids and determining an initial Contract Price.

10.4.1.1.1. Determinations of the actual quantities and classifications of Unit Price Work performed by Contractor will be made by Owner's Representative subject to the provisions of Article 13.2.1.

10.4.2 Each unit price will be deemed to include an amount considered by Contractor in the proposal to be adequate to cover Contractor's overhead and profit for each separately identified item.

10.4.3 Owner and Contractor may make a Claim for an adjustment in the Contract Price in accordance with Article 11.5 if:

10.4.3.1. the quantity of any item of Unit Price Work performed by Contractor differs materially and significantly from the estimated quantity of such item indicated in the Agreement; and

10.4.3.2. there is no corresponding adjustment with respect any other item of Work; and

10.4.3.3. Contractor believes that Contractor is entitled to an increase in Contract Price as a result of having incurred additional expense or Owner believes that Owner is entitled to a decrease in Contract Price and the parties are unable to agree as to the amount of any such increase or decrease.

10.5 Contractor's Fee: The Contractor's fee for overhead and profit for Work performed under a Change Order/Extra Work Order shall be determined as follows:

10.5.1. a mutually acceptable fixed fee; or

10.5.2. if a fixed fee is not agreed upon, then a fee based on the following percentages of the various portions of the Cost of the Work:

10.5.2.1. for costs incurred under Articles 10.2.1.1 and 10.2.1.2, the Contractor's fee shall be fifteen (15) percent;

10.5.2.2. for costs incurred under Article 10.2.1.3, 10.2.1.4 and 10.2.1.5, the Contractor's fee shall be ten (10) percent;

10.5.2.3. where one (1) or more tiers of subcontracts are on the basis of Cost of the Work plus a fee and no fixed fee is agreed upon, the intent of Article 10.5.2.1 is that the Subcontractor who actually performs the Work, at whatever tier, will be paid a fee of fifteen (15) percent of the costs incurred by such Subcontractor under Articles 10.2.1.1 and 10.2.1.2 and that any higher tier Subcontractor and Contractor will each be paid a fee often (10) percent of the amount paid to the next lower tier Subcontractor;

10.5.2.4. no fee shall be payable on the basis of costs itemized under Articles 10.1.2.1 and 10.1.2.2;

10.5.2.5. the amount of credit to be allowed by Contractor to Owner for any change which results in a net decrease in cost will be the amount of the actual net decrease in cost; and

10.5.2.6. when both additions and credits are involved in any one change, the adjustment in Contractor's fee shall be computed based on the net change in accordance with Article 10.5.2.1 through 10.5.2.5, inclusive.

ARTICLE 11 - CHANGES IN THE WORK

11.1 Authorized Changes in the Work

11.1.1 Without invalidating the Agreement and without notice to any surety, Owner, through the Owner's Representative, may, at any time or from time to time, order additions, deletions, or revisions in the Work by a Written Amendment, a Change Order, an Extra Work Order, Work Change Directive, or a Construction Change Directive. Upon receipt of any such document, Contractor shall promptly proceed with the Work involved, which will be performed under the applicable conditions of the Contract Documents (except as otherwise specifically provided).

11.1.2 If there is agreement that said request will include an adjustment either in the Contract Sum, the Contract Time, or both, the adjustment shall be based on one of the following methods:

11.1.2.1. Mutual acceptance of a lump sum properly itemized and supported with sufficient substantiating data and documentation to permit evaluation and mutually acceptance of adjustment to Contract Time, and Contract Price if necessary;

11.1.2.2. Contract Price and Contract Time to be determined in a manner agreed upon by the parties and a mutually acceptable fixed or percentage Contractor’s fee; or

11.1.2.3. As provided in Articles 9.2 and 10.

11.1.3 The Owner's Representative shall have authority to order minor changes in the Work not involving any adjustment in the Contract Sum or an extension of the Contract Time and not inconsistent with the intent of the Contract Documents.

11.1.3.1. Such changes shall be made by a written Field Order, or by other written orders.

11.1.3..2. Such changes shall be binding on the Owner and the Contractor.

11.1.3.2.1. If the Contractor is not in agreement that such order does not increase either the Contract Sum or the Contract Time, the Contractor shall promptly present his Claim in the method specified in Article 11.5, herein.

11.1.4. The Owner's Representative may issue written Field Orders covering minor changes in the Work without change in Contract Sum or Contract Time.

11.1.4.1. If the Contractor is not in agreement that such Field Order does not increase either the Contract Sum or the Contract Time, he shall promptly present his claim in the method specified in Article 11.5, herein.

11.1.5. If Owner and Contractor are unable to agree on entitlement to, or on the amount or extent, if any, of an adjustment in the Contract Price or Contract Time, or both, that should be allowed as a result of a Work Change Directive or a Construction Change Directive, a claim may be made therefore as provided in Article 11.5.

11.2 Unauthorized Changes in the Work

11.2.1. Contractor shall not be entitled to an increase in the Contract Price or an extension of the Contract Time with respect to any Work performed that is not required by the Contract Documents as amended, modified, or supplemented, except in the case of an emergency as provided in Article 14.13 or in the case of testing and/or uncovering Work as provided in Articles 12.3 and 12.4.

11.3 Execution of Change Orders and Extra Work Orders

11.3.1. Owner and Contractor shall execute appropriate written Change Orders and/or Extra Work Orders (or Written Amendments) recommended by Owner's Representative covering:

11.3.1.1. changes in the Work, which are:

11.3.1.1.1. ordered by Owner's Representative pursuant to Article 11.1;

11.3.1.1.2. required because of acceptance of defective Work under Article 12.7.1 or Owner's Representative's correction of defective Work under Article 12.8; or

11.3.1.1.3. agreed to by the parties;

11.3.1.2. changes in the Contract Price or Contract Time which are agreed to by the parties, including any undisputed sum or amount of time for Work actually performed in accordance with a Work Change Directive or a Construction Change Directive; and

11.3.1.3. changes in the Contract Price or Contract Time which embody the substance of any written decision rendered by Owner's Representative pursuant to Article 11.5; provided that in lieu of executing any such Change Order, an appeal may be taken from any such decision in accordance with the provisions of the Contract Documents and applicable Laws or Regulations, but during any such appeal of the Dispute, Contractor shall carry on the Work and adhere to the Progress Schedule and the Owner shall pay for such work performed subject to final resolution of the Dispute.

11.3.1.4. Owner, with the approval of the Change Order/Extra Work Order, shall submit written evidence to the Contractor that the money to pay for said Change Order Work has been assigned to make payment under the Contract.

11.4 Notification to Surety

11.4.1. If notice of any change affecting the general scope of the Work or the provisions of the Contract Documents (including, but not limited to Contract Price or Contract Time) is required by the provisions of any Bond

to be given to a surety, the giving of any such notice will be Contractor's responsibility. The penal sum of each applicable Bond will be adjusted to reflect the effect of any such change.

11.4.1.1. Owner shall submit to the pertinent government agencies any documentation required by law or regulation to be submitted for the validity or enforceability of any Change Order Work, and shall provide proof of the proper submittal of said documentation if requested in writing by the Contractor.

11.5 Claims and Disputes

11.5.1. Written notice stating the general nature of each Claim, Dispute, or other matter shall be delivered by Contractor to Owner, through Owner's Representative, promptly (but in no event later than 30 days) after the start of the event giving rise thereto.

11.5.1.1. Notice of the amount or extent of the Claim, Dispute, or other matter with supporting data shall be delivered to the Owner within sixty (60) days after the end of such event (unless Owner's Representative allows additional time for claimant to submit additional or more accurate data in support of such Claim, dispute, or other matter).

11.5.1.2. A Claim for an adjustment in Contract Price shall be prepared in accordance with the provisions of Article 11.1.2.

11.5.1.3. A Claim for an adjustment in Contract Time shall be prepared in accordance with the provisions of Article 9.2.2.

11.5.1.4. Each Claim shall be accompanied by claimant's written statement that the adjustment claimed is the entire adjustment to which the claimant believes it is entitled as a result of said event.

11.5.2. If the Dispute is not decided by the Owner's Representative, or said decision notified to Contractor within thirty (30) days following the receipt of the notice of Dispute by the Owner's Representative, the Claim shall be deemed rejected.

11.5.3. Owner's Representative's Decision: Owner's Representative will render a formal decision in writing within thirty (30) days after receipt of the submittal of the Claim. Owner's Representative's written decision regarding the Dispute, or other matter, will be final and binding upon Owner and Contractor unless:

11.5.3.1. An appeal from Owner's Representative's decision is taken within the time limits and in accordance with the dispute resolution procedure set forth in Article 16.

11.5.4. No Claim for an adjustment in Contract Price or Contract Time (or Milestones) will be valid if not submitted in accordance with this section 11.5.

ARTICLE 12 - TESTS AND INSPECTIONS; CORRECTION, REMOVAL OR ACCEPTANCE OF DEFECTIVE WORK

12.1 Notice of Defects

12.1.1. Prompt notice of all defective Work of which Owner, Owner's Representative and Architect/Engineer has actual knowledge will be given to Contractor. If no notice is promptly given to Contractor of previously known defective Work, it shall be deemed acceptable to Owner.

12.1.2. All defective Work may be rejected, corrected, or accepted as provided in this Article.

12.2 Access to Work

12.2.1. Owner, Owner's Representative, Architect/Engineer, Architect/Engineer's Consultant, other representatives and personnel of Owner, independent testing laboratories, and governmental agencies with jurisdictional interests will have access to the Site and the Work at reasonable times for their observation, inspecting, and testing. Said access shall be previously coordinated with Contractor.

12.2.1.1. Contractor shall provide them proper and safe conditions for such access and advise them of Contractor's Site safety procedures and programs so that they may comply therewith as applicable.

12.3 Tests and Inspections

12.3.1. Inspection of Materials

12.3.1.1. Unless otherwise specified in the Contract Documents, all materials are subject to inspection, sampling, testing, retesting and rejection by the Owner's Representative as provided in the specifications and prior to acceptance of the Work.

12.3.1.2. Any work in which untested and unaccepted materials are used without the approval of the Owner's Representative, except if said material is the one specified in the Contract Documents, will be performed at the Contractor's risk.

12.3.1.1.2.1. Material found to be unacceptable will not be paid for and, if directed by the Owner's Representative, shall be removed at the Contractor's expense.

12.3.1.3. Unless otherwise indicated in the Contract Documents, the sampling of materials for testing will be performed by Owner's Representative personnel or by other personnel designated by the Owner, at Owner's expense.

12.3.1.1.3.1. Where sampling by the Contractor is specified, the samples shall be taken using approved Contractor furnished sampling devices, under the supervision of the Owner's Representative, and at such times or intervals as directed.

12.3.1.1.3.2. When materials are tested by the Owner, copies of the test reports will be furnished to the Contractor. Unless otherwise required in the Contract Documents, tests may or may not be performed by Owner and the Contractor shall not rely on the results of the Owner testing being available for process control.

12.3.1.4. Plant Inspection: Owner's Representative may undertake the inspection of materials at the production plant. In the event plant inspection is undertaken the following conditions shall be met:

12.3.1.1.4.1. The Owner's Representative shall have the cooperation and assistance of the Contractor and the producer with whom he has contracted for materials.

12.3.1.1.4.2. The Owner's Representative shall have full entry at all times to such parts of the plant as may concern the manufacture or production of the materials being furnished.

12.3.1.1.4.3. Adequate safety measures shall be provided and maintained.

12.3.2 Contractor shall give Owner's Representative timely notice of readiness of the Work for all required inspections, tests, or approvals and shall cooperate with inspections and testing personnel to facilitate required inspections or tests. No delays, or hindrance in the performance of the Work, shall be caused by tardiness in Owner's Representative's inspection of the Work.

12.3.2.1. The Contractor shall submit to the Owner's Representative, within twenty (20) calendar days following the date of Notice to Proceed, the name of the local testing laboratory (ies) proposed for use with respect to the Work.

12.3.2.1.1. The Owner's Representative shall, within ten (10) calendar days after receipt of the submittal of the proposed testing laboratory(ies), approve said laboratory (ies), or submit written reasons for his disapproval.
12.3.2.1.2. If no notice of approval or disapproval is received within said period of time, Contractor shall submit the request for approval to the Chief of Construction or equivalent division head of Owner who shall have ten (10) calendar days to issue his decision. If the Chief of Construction or equivalent division head of Owner does not render his decision within said time, the testing laboratory (ies) will be deemed approved by the Owner's Representative.

12.3.3. Unless otherwise provided in the Contract Documents, Owner's Representative shall employ and pay for the services of independent testing entities to perform all inspections, tests, or approvals required by the Contract Documents except for inspections, tests, or approvals covered by Article 12.3.4. The costs incurred in connection with tests or inspections conducted pursuant to Article 12.4.2.1 shall be paid as provided in Article 12.4.

12.3.3.1 Whenever Contractor is responsible for arranging, obtaining and paying for costs in connection with any inspection, test, or approval required for Owner's Representative's or Architect/Engineer's acceptance of materials, mix designs, or equipment, the inspecting or testing entity shall be submitted for approval by Owner's Representative and the inspection or test shall be performed prior to Contractor purchasing such materials, mix designs, or equipment for incorporation to the Work.

12.3.3.1.1. Unless otherwise indicated in the Contract Documents, such inspections, tests, or approvals shall be performed by organizations acceptable to Owner, Owner's Representative and Architect/Engineer, whose acceptance shall not be unreasonably denied.

12.3.4. If Laws or Regulations of any public body having jurisdiction, at bid opening date, require any Work (or part thereof) specifically to be inspected, tested, or approved by an employee or other representative of such public body, Contractor shall assume full responsibility for arranging and obtaining such inspections, tests, or approvals, pay all costs in connection therewith, and furnish Owner's Representative the required certificates of inspection or approval. If said Laws and Regulations are enacted after bid opening date, the costs for said inspections shall be borne by the Owner.

12.4 Uncovering Work

12.4.1. If a portion of the Work, whether or not inspected, tested or approved is covered contrary to the Owner's Representative written request or to requirements specifically expressed in the Contract Documents, it must, if required in writing by the Owner's Representative be uncovered for the Owner's Representative observation and be replaced or reconstructed at the Contractors expense without change in the Contract Time and Amount.

12.4.2. If a portion of the Work whether or not inspected, tested or approved has been covered and the Owner's Representative had not specifically required its inspection in writing prior to being covered, the Owner's Representative may required its inspection and it shall be uncovered by the Contractor.

12.4.2.1. If it is found that such Work is defective, Contractor shall pay all Claims, costs, losses, and damages (including but not limited to all fees and charges of engineers, architects, attorneys, and other professionals and all court or arbitration or other dispute resolution costs) arising out of or relating to such uncovering, exposure, observation, inspection, and testing, and of satisfactory replacement or reconstruction (including but not limited to all costs of repair or replacement of work of others.)

12.4.2.2. If however, such Work is not found to be defective, Contractor shall be allowed an increase in the Contract Price or an extension of the Contract Time (or Milestones), or both, directly attributable to such uncovering, exposure, observation, inspection, testing, replacement, and reconstruction.

12.5 Correction or Removal of Deficient Work

12.5.1. Contractor shall correct all deficient Work, whether or not fabricated, installed, or completed, or, if the Work has been rejected by Owner's Representative's, remove it from the Project and replace it with Work that is not deficient. Contractor shall bear, exclusively, the cost of correcting such deficient Work.

12.6 Correction Period

12.6.1. If within one (1) year after the date of Substantial Completion or such longer period of time as may be prescribed by Laws or Regulations or by the terms of any applicable special guarantee required by the Contract Documents or by any specific provision of the Contract Documents, any Work is found to be deficient; or if the repair of any damages to the land or areas made available for Contractor's use by Owner or permitted by Laws and Regulations, at the Effective Date of the Agreement, as contemplated in Article 6.11.1 is found to be deficient, in all such instances Contractor shall promptly, without cost to Owner and in accordance with Owner's written instructions:

12.6.1. 1. repair such deficient land or areas; or

12.6.1.2. correct such deficient Work or, if the deficient Work has been rejected by Owner, remove it from the Project and replace it with Work that is not deficient, and

12.6.1.3. satisfactorily correct or repair or remove and replace any damage to other Work, to the work of others, or other’s land or areas resulting therefrom.

12.6.1.3.1. If Contractor does not, after a ten (10) day written notice from Owner, promptly start complying and diligently comply with the terms of such instructions, (or in an emergency where delay would cause serious risk of loss or damage), Owner may have the deficient Work corrected or repaired or may have the rejected Work removed and replaced, and all costs, arising out of or relating to such correction or repair or such removal and replacement (including but not limited to all costs of repair or replacement of work of others) will be paid by Contractor.

12.6.2. In special circumstances where a particular item of equipment is placed in continuous service, at the request of the Owner's Representative, before Substantial Completion of all the Work, the correction period for that

item shall start to run from the date that said equipment is placed on service.

12.6.3. Where deficient Work (and damage to other Work resulting there from) has been corrected or removed and replaced under this section 12.6, the correction period hereunder with respect to such Work will be extended for an additional period of one (1) year after such correction or removal and replacement has been satisfactorily completed.

12.7 Acceptance of Non-Compliant Work

12.7.1. If both parties agree, instead of requiring correction or removal and replacement of deficient Work, and Owner (prior to Architect/Engineer's recommendation of final payment) prefers to accept it, Owner may do so.

12.7.1.1. If both parties cannot reach agreement on acceptance of deficient work, then the Contractor shall correct such deficient Work to Owner's satisfaction or either party may make a Claim as provided in Article 11.5.

12.7.2. If any such acceptance occurs prior to Owner's Representative's recommendation of final payment, a Change Order/Extra Work Order will be issued incorporating the necessary revisions in the Contract Documents with respect to the Work, and Owner shall be entitled to an appropriate decrease in the Contract Price, reflecting the diminished value of Work so accepted.

12.7.2.1. If the parties are unable to agree as to the amount thereof, either party may Claim as provided in Article 11.5.

12.8 Owner's Right to Correct Deficient Work

12.8.1. If Contractor fails within a reasonable time after written notice from Owner's Representative to start correction of deficient Work or to diligently prosecute correction or to remove and replace rejected Work as required by Engineer in accordance with Article 12.6.1, or if Contractor fails to perform the Work in accordance with the Contract Documents, or if Contractor fails to substantially comply with any other provision of the Contract Documents, Owner may, after seven (7) days written notice to Contractor, correct and remedy any such deficiency.

12.8.2. In exercising the rights and remedies under this paragraph. Owner shall proceed expeditiously.

12.8.2.1. In connection with such corrective and remedial action, Owner may exclude Contractor from all or part of the Site, take possession of all or part of the Work and suspend Contractor's services related thereto, take possession of Contractor's tools, appliances, construction equipment and machinery at the Site, and incorporate in the Work all materials and equipment stored at the Site or for which Owner has paid Contractor but which are stored elsewhere.

12.8.2.2. Contractor shall allow Owner, Owner's representatives, agents and employees, Owner's other contractors, and Architect/Engineer and Architect/Engineer's Consultants access to the Site to enable Owner to exercise the rights and remedies under this paragraph.

12.8.3. All costs incurred or sustained by Owner in exercising the rights and remedies under this Article 12.8 will be charged to Contractor.

12.8.3.1. If the parties are unable to agree as to the amount of the adjustment, a Claim therefore may be made

as provided in Article 11.5.

12.8.3.1.1. Such claims, costs, losses and damages will include but not be limited to all costs of repair, or replacement of work of others destroyed or damaged by correction, removal, or replacement of Contractor's deficient Work.

12.8.4. Contractor shall not be allowed an extension of the Contract Time (or Milestones) because of any delay in the performance of the Work attributable to the exercise by Owner of Owner's rights and remedies under this Article 12.8.

ARTICLE 13 - PAYMENTS AND COMPLETION

13.1 Proposal Schedule and Schedule of Values

13.1.1. Proposal Schedule (Unit-Price Contracts)

13.1.1.1. In Unit-Price Contracts, the quantities in the proposal schedule are approximate only and the actual quantities to be paid for cannot be determined until the work is performed and accepted. Increases or decreases in the proposal schedule quantities will be considered as normal overruns or underruns, and the Contractor shall accept as payment in full, so far as contract items are concerned, payment at the original contract unit prices for the accepted quantities of work performed.

13.1.1.2. Payments to the Contractor shall be made only for the actual quantities of each contract item, performed and accepted in accordance with the plans and specifications and, if upon completion of the construction, these actual quantities shall show either a decrease or increase from the quantities in the proposal schedule, the contract unit prices will prevail.

13.1.1.2.1. In Unit-Price Contracts, the Contractor will submit for approval to the Owner's Representative a schedule of values for those Lump-Sum bid items only.

13.1.1.2.2. This schedule, when approved by the Owner's Representative, shall be used solely as a basis for the monthly partial payments.

13.1.1.3. If the "Basis of Payment" in the specifications relating to any unit price in the bid schedule requires that said unit price cover and be considered compensation for certain work or material essential to the item, this same work or material will not also be measured or paid for under any other pay item which may appear elsewhere in the Contract Documents.

13.1.2. Schedule of Values (Lump-Sum Contracts)

13.1.2.1. In Lump-Sum Contracts, the Contractor, within fifteen (15) days after the date of the Notice to Proceed, will submit for approval, to the Owner's Representative, a schedule of values prepared in approved forms of the various portions of the Work aggregating the total Contract Sum, divided so as to facilitate monthly partial payments.

13.1.2.2. Each item in the schedule of values shall include its proper share of overhead and profit. Initial disbursements items such as mobilization, temporary facilities, premiums for insurance, and bonds and all cost of government fees and permits required for work, shall be separately itemized to facilitate first partial payment.

13.1.2.3. This schedule, when approved by the Owner's Representative, shall be used solely as a basis for the monthly partial payments and not as unit prices for changes in the Work.

13.1.2.4. The schedule of values shall be approved, or rejected in writing for cause notified to Contractor within fifteen (15) calendar days after receipt by Owner's Representative.

13.1.2.4.1. Any individual item on the schedule of values that is rejected by the Owner's Representative must be properly identified and reason for rejection substantiated and notified to the Contractor within said time period.

13.1.2.4.2. The Owner's Representative may allow certain individual items to appear in the schedule of values as lump sum items. These items must be broken down into individual items prior to request any partial payment regarding said individual item.

13.1.2.5. If the Owner's Representative does not reject the schedule of values as specified herein, then the same shall be deemed approved.

13.2 Progress Payments

13.2.1. Applications for Payments

13.2.1.1. The Progress Payment Period shall be one (1) month long unless otherwise indicated in the Contract Documents. The end of the Progress Payment period shall be the last day of the month unless otherwise established in the Contract Documents. The Contractor does not have to submit an application for payment every month if he so chooses.

13.2.1.2. At least twenty (20) days before the date established for each progress payment, Contractor shall submit to Owner's Representative for review an Application for Payment filled out and signed by Contractor covering the Work completed as of the date of the Application and accompanied by such supporting documentation as is required by the Contract Documents.

13.2.1.3. The determination of quantities of acceptable completed Work under the terms of the Contract Documents will be jointly made by the Owner's Representative and Contractor. It will be based on measurements made by them, or their assistants, according to the units of measurement for each item as shown in the schedule of values and by the method indicated in the corresponding specification, if so indicated in said specification for said item.

13.2.1.4. If the requested payment is based on materials and equipment not incorporated in the Work, but delivered and suitably stored at the Site, or at another location, agreed to in writing, the Application for Payment shall also be accompanied by: (i) a bill of sale, invoice, or other documentation warranting that Owner has received the materials and equipment free and clear of all Liens and (ii) evidence that the materials and equipment are covered by appropriate property insurance or other arrangements to protect Owner's interest therein. All evidence required herein shall be in form satisfactory to Owner.

13.2.1.4.1. Such advance payment may be made to the Contractor for the cost of materials that are to be incorporated into the work, provided the materials meet the requirements of the plans and specifications and are on hand at the Site or stored in acceptable storage places.

13.2.1.4.1.1. No advance payment will be made on living or perishable plant materials.

13.2.1.4.1.2. In the case of materials that have been purchased by the Contractor, the cost shall be determined by the vendors invoice.

13.2.1.4.1.3. In the case of materials manufactured or obtained by the Contractor through the use of his own workmen or equipment, the cost will be determined by the Owner's Representative in accordance with and based upon that particular unit of the Project in which the materials are to be utilized.

13.2.1.4.2. The Contractor shall present signed receipts or other documentary evidence to prove that the cost of the materials for which he is to receive advance payment has been paid in full or, if the materials have not been paid for, the invoice shall be accompanied by a release from the materials dealer expressing his agreement with the payment for such materials to the Contractor by the Owner.

13.2.1.4.3. If at any time after the Contractor has received advance payment for materials on hand at the Site, the Owner or Owner's Representative obtains evidence indicating that said materials, or any part or parts thereof, are defective, or that said materials, or parts thereof, do not conform to the specifications, the Owner will proceed to deduct from any of the succeeding partial payments due the Contractor for work actually performed, a sum sufficient to cover the cost of the materials, or part or parts thereof, found to be defective.

13.2.1.4.4. Materials for which the Contractor has received advance payment shall be properly housed at the Site or in acceptable storage places in the vicinity of the Project in a secure manner that will insure the preservation of their quality and fitness for the Work.

13.2.1.4.4.1. Moreover, the Contractor shall not withdraw said materials for any purpose other than incorporation into the Project, unless he has written consent from the Owner or Owner's Representative to do so.

13.2.1.4.4.2. Storage and protection costs and the cost of replacing lost or damaged materials shall be borne by the Contractor.

13.2.1.4.5. Approval of partial payments for stockpiled materials will not constitute acceptance of such materials for use in completing items of Work.

13.2.1.4.6. An amount equal to the value of materials incorporated into the Work and for which an advance payment has been made, shall be deducted from the partial estimates.

13.2.1.4.7. Unless otherwise specified in the Contract Documents, Payment shall be made to the Contractor for materials fabricated, pre-cast or otherwise produced for the Project and stored at an approved site in Puerto Rico other than in the immediate vicinity of the Project, provided the Contractor furnish and file with the Owner insurance which shall protect the Contractor and the Owner from all risk of physical loss or damage to these materials.

13.2.1.4.7.1. The amount of such insurance shall not be less than the value of such materials.

13.2.2. Retainage

13.2.2.1. The amount of retainage with respect to progress payments shall be as stipulated in the bid documents.

13.2.2.1.1. Unless otherwise specified in the Contract Documents, such retainage shall be five percent (5%) of each partial payment made to the Contractor.

13.2.2.1.1.1. In cases in which a ten percent (10%) Retainage is required by Owner, then after fifty percent (50%) of the Work has been completed to the Owner's Representative's satisfaction and the Project is on schedule and the quality of Work is satisfactory to the Owner's Representative, all the remaining payments may be made in full.

13.2.2.1.2. Immediately after the Owner's Representative, on the basis of an inspection, has determined and certified that the Work is sufficiently complete, or the Work has been occupied for the use for which it was intended, the Owner will release to the Contractor fifty percent (50%) of the amount previously retained provided the following conditions are met.

13.2.2.1.2.1. A written consent of Surety to make such payment is submitted.

13.2.2.1.2.2. There are no claims to be settled from the Owner to the Contractor.

13.2.2.1.2.3. There are no liquidated damages due.

13.2.2.1.2.3.1. However, at Owner's discretion, the Owner may release to Contractor the difference between fifty percent (50%) of the retainage and the amount of liquidated damages.

13.2.3. Review of Applications

13.2.3.1. The Owner's Representative will review the Application for Payment as soon as it is received and will notify the Contractor within five (5) working days of any exceptions he may have. The Contractor will make the necessary corrections and resubmit the Application.

13.2.3.2. The Owner's Representative will, within seven (7) days of the Contractor's date of submittal or five (5) days from the date of resubmission, if the corrections are acceptable, submit the approved Application for Payment to the Owner with all required documentation and approvals from the Architect/Engineer and the Owner's Representative.

13.2.3.3. Owner's Representative's recommendation of any payment requested in an Application for Payment will constitute a representation by Owner's Representative to Owner, based on Owner's Representative's observations on the Site of the executed Work as an experienced and qualified professional and on Owner's Representative's review of the Application for Payment and the accompanying data and schedules, that to the best of Owner's Representative's knowledge, information and belief.

13.2.3.3.1. the Work has progressed to the point indicated

13.2.3.3.2. the quality of the Work is generally in accordance with the Contract Documents (subject to an evaluation of the Work as a functioning whole prior to or upon Substantial Completion, to the results of any subsequent test called for in the Contract Documents, to a final determination of quantities and classifications for Unit Price Work, and to any other qualifications stated in the recommendation); and

13.2.3.3.3. the conditions precedent to Contractor's being entitled to such payment appear to have been fulfilled in so far as it is Owner's Representative's responsibility to observe the Work.

13.2.3.4. By recommending any such payment, Owner's Representative will not thereby be deemed to have

represented that:

13.2.3.4.1. inspections made to check the quality or the quantity of the Work as it has been performed have been exhaustive, extended to every aspect of the Work in progress, or involved detailed inspections of the Work beyond the responsibilities specifically assigned to Owner's Representative in the Contract Documents; or

13.2.3.4.2. that there may not be other matters or issues between the parties that might entitle Contractor to be paid additionally by Owner or entitle Owner to withhold payment to Contractor.

13.2.3.5. Neither Owner's Representative's review of Contractor's Work for the purposes of recommending payments nor Owner's Representative's recommendation of any payment, including final payment, will impose responsibility on Owner's Representative to supervise, direct, or control the Work or for the means, methods, techniques, sequences, or procedures of construction, or the safety precautions and programs incident thereto, or for Contractor's failure to comply with Laws and Regulations applicable to Contractor's performance of the Work.

13.2.3.5.1. Additionally, said review or recommendation will not impose responsibility on Owner's Representative to make any examination to ascertain how or for what purposes Contractor has used the moneys paid on account of the Contract Price, or to determine that title to any of the Work, materials, or equipment has passed to Owner free and clear of any Liens.

13.2.3.6. Owner's Representative may refuse to recommend in whole or in part of any payment if, in Owner's Representative's reasonable opinion, it would be untruthful to make the representations to Owner referred to in Article 13.2.3.3.

13.2.3.6.1. Owner's Representative may also (i) refuse to recommend any such payment or, because of subsequently discovered evidence or the results of subsequent inspections or tests, (ii) revise or (iii) revoke any such payment recommendation previously made, to such extent as may be necessary in Owner's Representative's reasonable opinion to protect Owner from loss because:

13.2.3.6.1.1. the Work is defective, or completed Work has been damaged, requiring correction or replacement;

13.2.3.6.1.2. the Contract Price has been reduced by Written Amendment, Change Orders or Extra Work Orders to the extent that justifies withholding payment;

13.2.3.6.1.3. Owner has been required to correct deficient Work or complete Work and has not yet done so; or

13.2.3.6.1.4. Owner's Representative has actual knowledge of the occurrence of any of the events enumerated in Article 15.2.1.

13.2.4. Payments Becomes Due

13.2.4.1. Unless otherwise specified in the Contract Documents, forty (40) days after Owner's approval of the Application for Payment, with Owner's Representative's recommendation, the amount recommended will become due, and when due, shall be paid by Owner to Contractor.

13.2.5. Reduction in Payment

13.2.5.1. The Owner's Representative, without incurring in liability, may decline to approve any Application for Payment or, because of subsequently discovered evidence or subsequent inspection, he may nullify the whole or any part of any Application for Payment previously issued, to such extent as may be necessary in his opinion to protect the Owner from loss because of:

13.2.5.1.1. Deficient Work not remedied; or

13.2.5.1.2. Failure of the Contractor to comply with any requirements of the Contract Documents.

13.2.5.2. Owner may refuse to make payment of the full amount recommended by Owner's Representative because:

13.2.5.2.1. claims have been made against Owner on account of Contractor's performance or furnishing of the Work;

13.2.5.2.2. Liens have been filed in connection with the Work, except where Contractor has delivered a specific Bond satisfactory to Owner to secure the satisfaction and discharge of such Liens;

13.2.5.2.3. there are other items entitling Owner to a set-off against the amount recommended; or

13.2.5.2.4. Owner has actual knowledge of the occurrence of any of the events enumerated in Article 13.2.3.6 or 15.2.1.

13.2.5.3. If Owner refuses to make payment of the full amount recommended by Owner's Representative, Owner must give Contractor immediate written notice (with a copy to Owner's Representative) stating the reasons for such action and promptly pay Contractor any amount remaining after deduction of the amount so withheld.

13.2.5.3.1. Owner shall promptly pay Contractor the amount so withheld, or any adjustment thereto agreed to by Owner and Contractor, when Contractor corrects to Owner's Representative's satisfaction the reasons for such action.

13.2.5.3.2. If it is subsequently determined that Owner's refusal of payment was not justified, the amount wrongfully withheld shall be treated as an amount due as determined by Article 13.2.4.

13.2.5.4. Partial payments may be suspended when in the judgment of the Owner the Work has not proceeded according to the terms of the Contract Documents.

13.2.5.5. If at any time during the construction of the Project, the Owner receives proper notice from a third party stating a claim under Civil Code Article 1489, the Contractor shall settle the claim with the third party within fifteen (15) calendar days from the notice to the Owner and inform the Owner of said settlement or otherwise if Contractor disputes the validity of said claim, post a bond, acceptable to Owner, for the benefit of Owner to protect Owner against liability for payment to the third party under Civil Code Article 1489 in which case partial payment therefore will not be withheld. This will apply in any project where there is no Payment or Performance Bond, or the penal sum of such bond is an amount less than one hundred (100) percent of the Contract Sum.

13.2.5.5.1. If no settlement is reached or a bond is not posted and accepted, the Owner, the Contractor, and the claimant third party shall meet within thirty (30) days after the expiration of the fifteen (15) calendar days to

ascertain the amount of the alleged debt.

13.2.5.5.2. Contractor shall then pay within five (5) calendar days the undisputed amount. If no payment is made, the Owner shall retain said amount from the next partial payment and proceed to pay directly the undisputed amount to the third party. If the Contractor posts a bond as provided in Article 13.2.5.5 the Owner will not withhold said amount from Contractor and will not pay the amount to the third party claimant until the Contractor or the third party claimant notify Owner that the dispute among them has been resolved at which time Owner will act accordingly.

13.2.6. Scope of Payment

13.2.6.1. The payment of any partial estimate or of any retained percentage, in no way shall release the obligation of the Contractor to renew or repair any deficient materials used in the construction, or to be responsible for all damage due to such deficiencies.

13.2.6.2. No payment will be made for any unauthorized work.

13.2.6.3. No certificate for a progress payment, nor any progress payment, or any partial or entire use or occupancy of the Project by the Owner shall constitute an acceptance of any Work not in accordance with the Contract Documents.

13.3 Contractor's Warranty of Title

13.3.1. Contractor warrants and guarantees that title to all Work, materials, and equipment covered by any Application for Payment, whether incorporated in the Project or not, will pass to Owner no later than the time of payment, and will pass free and clear of all Liens, Claims, security interests or encumbrances. Contractor also warrants and guarantees that no Work, materials, or equipment covered by an Application for Payment has been acquired by the Contractor, subject to an agreement under which an interest therein, or an encumbrance thereon, is retained by the seller or otherwise imposed by the Contractor or such other person. This will also apply to any other person performing the Work for the Project on behalf of Contractor , or furnishing materials and equipment for the Project.

13.4 Substantial Completion

13.4.1. When Contractor considers the entire Work ready for its intended use Contractor shall notify Owner and Owner's Representative in writing that the entire Work is Substantially Complete (except for items specifically listed by Contractor as incomplete) and request that Owner's Representative issue a Certificate of Substantial Completion. Owner may, at its sole option, request that part of the Work be declared Substantially Complete as provided in Article 13.5.1.

13.4.1.1. Within five (5) working days after such request, Owner, Contractor and Owner's Representative shall make an inspection of Work to determine the state of completion. If within this time period, the Owner's Representative fails to make objections or respond, the Contractor shall request the approval of the Chief of Construction or equivalent division head of Owner which shall have fifteen (15) working days to issue its approval or disapproval of the Certificate of Substantial Completion.

13.4.1.1.1. If Owner's Representative does not consider the Work substantially complete, Owner's Representative will notify Contractor in writing, within five (5) working days after the inspection, giving the reasons therefore.

13.4.1.1.2. If Owner's Representative considers the Work substantially complete, Owner's Representative will prepare and deliver to Owner, within ten (10) working days after the inspection, a tentative certificate of Substantial Completion which shall fix the date of Substantial Completion.

13.4.1.1.3. There shall be attached to the certificate a tentative list of items (punch list) to be completed or corrected before final payment.

13.4.1.2. Owner shall have ten (10) working days after receipt of the tentative certificate during which to make written objection to Owner's Representative as to any provisions of the certificate of Substantial Completion or attached list.

13.4.1.3. If, after considering such objections, indicated on Article 13.4.1.2, Owner's Representative concludes that the Work is not substantially complete, Owner's Representative will within fifteen (15) working days after submission of the tentative certificate of Substantial Completion to Owner notify Contractor in writing, stating the reasons therefore.

13.4.1.4. If, after consideration of Owner's objections, indicated on Article 13.4.1.2, Owner's Representative considers the Work Substantially Complete, Owner's Representative will, within said fifteen (15) working days, execute and deliver to Owner and Contractor a definitive certificate of Substantial Completion (with a revised final punch list of items to be completed or corrected). Such final certificate will reflect such changes from the tentative certificate as Owner's Representative believes justified, after consideration of any objections from Owner.

13.4.1.5. At the time of issuance of the certificate of Substantial Completion, Owner will assume all responsibilities with respect to security, operation, safety, and protection of the Work, maintenance, utilities, insurance, and Contractor warranties and guarantees periods will start to run.

13.4.1.6. Unless Owner and Contractor agree otherwise in writing and inform Owner's Representative also in writing prior to Owner's Representative's issuing the definitive certificate of Substantial Completion, Owner's Representative's aforesaid recommendation will be binding on Owner and Contractor until final payment is made.

13.4.2. Owner shall have the right to exclude Contractor from the Site after the date of Substantial Completion, but Owner shall allow Contractor reasonable access to complete or correct items on the final punch list.

13.5 Partial Utilization

13.5.1 Use by Owner, at Owner's option, of any substantially completed part of the Work which has specifically been identified in the Contract Documents, or which Owner, Owner's Representative, and Contractor agree constitutes a separately functioning and usable part of the Work that can be used by Owner for its intended purpose, without significant interference with Contractor's performance of the remainder of the Work, may be effected (put to such use) prior to Substantial Completion of all the Work subject to the following:

13.5.1.1. Owner at any time may request Contractor in writing to permit Owner to use any such part of the Work which Owner believes to be ready of its intended use and substantially complete.

13.5.1.1.1. If Contractor agrees that such part of the Work is substantially complete, Contractor will certify to Owner and Owner's Representative that such part of the Work is substantially complete and request Owner's Representative to issue a certificate of Substantial Completion for that part of the Work.

13.5.1.1.2. Contractor at any time may notify Owner and Owner's Representative in writing that Contractor considers any such part of the Work ready for its intended use and substantially complete and request Owner's Representative to issue a certificate of Substantial Completion for that part of the Work.

13.5.1.1.2.1. Within a reasonable time (not more than fifteen (15) days) after either party's request, Owner, Contractor, and Owner's Representative shall make an inspection of that part of the Work subject to the request to determine its state of completion.

13.5.1.1.2.2. If Owner's Representative does not consider that part of the Work to be substantially complete, Owner's Representative will notify Owner and Contractor in writing giving the reasons therefore.

13.5.1.1.2.3. If Owner's Representative issues a certificate of Substantial Completion for said part of the Work thereupon all applicable provisions of Article 13.4 shall apply.

13.5.1.1.3. No occupancy or separate operation of part of the Work may occur prior to compliance with the requirements of Article 13.4.1.5 regarding property insurance.

13.6 Final Inspection

13.6.1. Upon written notice from Contractor that the entire Work or an agreed portion thereof is complete, Owner's Representative will, within five (5) working days, make a final inspection with Owner and Contractor and will notify Contractor in writing of all particulars this inspection reveals with regard to incomplete or deficient Work.

13.6.1.1. Contractor shall immediately take measures to complete such Work and remedy such deficiencies.

13.7 Final Payment

13.7.1. Application for Payment

13.7.1.1. After Contractor has, in the opinion of Owner's Representative, satisfactorily remedied all incomplete and deficient Work identified during the final inspection and has delivered, in accordance with the Contract Documents, all maintenance and operating instructions, schedules, guarantees, Bonds, certificates or other evidence of insurance, certificates of inspection, marked-up record documents, and other documents required by the Contract, Contractor may make application for final payment following the procedure for progress payments.

13.7.1.2. The final Application for Payment shall be accompanied, except if previously delivered to Owner's Representative, by:

13.7.1.2.1. all documentation, guarantees, Bonds and insurance called for in the Contract; and.

13.7.1.2.2. consent of the surety, if any, to final payment; and

13.7.1.2.3. complete and legally effective releases, or waivers, (satisfactory to Owner) of all Lien rights arising out of or Liens filed in connection with the Work.

13.7.1.3. In lieu of the releases or waivers of Liens specified in Article 13.7.1.2.3, if approved by Owner, Contractor may furnish payment receipts or releases in full as part of an affidavit executed by Contractor to the

effect that:

13.7.1.3.1. the releases and receipts include all liabilities related to labor, services, material, and equipment for which a Lien could be filed; and

13.7.1.3.2. all payrolls, material and equipment bills, and other indebtedness connected with the Work for which Owner and Owner's property might in any way be responsible, have been paid or otherwise satisfied.

13.7.1.3.3. If any Subcontractor or Supplier fails to furnish such a release or receipt in full, Contractor may furnish a Bond or other collateral satisfactory to Owner to indemnify Owner against liability related to any such Lien.

13.7.2 Review of Final Application for Payment and Acceptance of the Work.

13.7.2.1. If, on the basis of Owner's Representative's observation of the Work during construction and final inspection, and Owner's Representative's review of the final Application for Payment and accompanying documentation as required by the Contract Documents, Owner's Representative is satisfied that the Work has been completed and Contractor's other obligations under the Contract Documents have been fulfilled, Owner's Representative will, within fifteen (15) days after receipt of the final Application for Payment, indicate to Owner in writing Owner's Representative's recommendation regarding payment and if payment is recommended present the Application for Payment to Owner, for payment.

13.7.2.1.1. At the same time, Owner's Representative will also give written notice to Owner and Contractor that the Work is acceptable subject to the provisions of Article 13.9.

13.7.2.1.2. Otherwise, within the time specified in Article 13.7.2.1, Owner's Representative will return the Application for Payment to Contractor, indicating in writing the reasons for refusing to recommend final payment, in which case Contractor shall make the necessary corrections and resubmit the Application for Payment. If within said fifteen (15) days after submittal of the final Application for Payment by Contractor the Owner's Representative fails to make objections or respond, the Contractor shall request approval directly from the Owner who shall have fifteen (15) working days to issue approval or disapproval, provided Contractor has also given the same timely notice directly to Owner as required in Article 17.3.2. If no reply is forthcoming from the Owner within the stated time, the final Application for Payment shall be deemed approved.

13.7.3. Final Payment Becomes Due

13.7.3.1. Unless otherwise specified in the Contract Documents, forty (40) days after Owner’s approval of the Application for Final Payment, with accompanying documentation, the amount recommended by Owner’s Representative will become due, and when due, shall be paid by Owner to Contractor.

13.7.3.2. If payment is not made within the time stated in Article 13.7.3.1., thereafter Owner s will pay Contractor interest at the legal rate on the amount due.

13.8 Final Completion Delayed

13.8.1. If, through no fault of the Contractor, final completion of the Work is significantly delayed, and if Owner's Representative so confirms, Owner shall, upon receipt of Contractor's final Application for Payment and recommendation of Owner's Representative, and without terminating the Agreement, make payment of the balance due for that portion of the Work fully completed and accepted.

13.8.2. If the remaining balance to be held by Owner for Work not fully completed, or corrected, is less than the retainage stipulated in the Agreement, and if Bonds have been furnished as required in Article 3, the written consent of the surety to the payment of the balance due for that portion of the Work fully completed and accepted shall be submitted by Contractor to Owner's Representative with Application for such payment.

13.8.2.1. Such payment shall be made under the terms and conditions governing final payment, except that it shall not constitute a waiver of any claim or of any right under the Contract.

13.9 Waiver of Claims

13.9.1. The making and acceptance of final payment will constitute:

13.9.1.1. a waiver of all Claims by Owner against Contractor, except for Claims arising from unsettled Liens, from deficient Work appearing after final inspection as the result of failure to comply with the Contract Documents, from special guarantees or from Contractor's continuing obligations under the Contract Documents; and

13.9.1.2. a waiver of all other unsettled Claims by Contractor against Owner, other than those previously made in a timely manner in writing.

13.10 Unilateral Liquidation

13.10.1. The procedures established in this section will be applicable whenever the Contractor is not available in order for the Owner to issue the final payment in accordance with Article 13.7.

13.10.1.1. For purposes of this section, the term "unavailable" shall meant that the Contractor repeteadly fails to answer Owner's requests to meet with the Owner and/or to submit the required documentation under Article 13.7 in order to proceed with the final payment and Project liquidation.

13.10.2. If Contractor is unavailable, Owner shall proceed to issue and process the final application for payment. In order to accomplish this, whenever possible, the Owner will seek to obtain the documentation required under Article 13.7.1.2 and 13.7.1.3.

13.10.2.1. When Owner can not obtain documentation required under Article 13.7.1.2 and 13.7.1.3 such documentation it may be waived by Owner in order to proceed to the issuance of final payment. However, in case of such waiver, Owner may impose those reasonable conditions Owner deems relevant in order to protect Owner’s interests and safeguard against claims by third parties.

13.10.3. If after finalizing liquidation of the Contract, payment is due Contractor and Contractor remains unavailable, Owner will retain such payment until Contractor is available to collect such payment. If the Final Payment is negative (i.e., the balance is in favor of the Owner), the Owner shall compensate such amount from any other payment in favor of Contractor, if any, and/or proceed to collect it by any means available.

ARTICLE 14 - PROTECTION OF PERSONS AND PROPERTY

14.1 Public Convenience and Safety

14.1.1. The Contractor shall at all times conduct the Work in a manner that insures the public safety and convenience and the protection of persons and property.

14.1.1.1. Contractor shall perform the Work in a manner that will not cause unreasonable inconvenience to the general public.

14.1.2. The Contractor shall comply with all laws, rules, codes and regulations applicable to the class of work being performed pertaining to public safety and the protection of persons and property.

14.2 Laws to be Observed

14.2.1 It is the Contractor's responsibility to be fully informed of and comply with all Federal, Commonwealth and municipal laws, ordinances, safety codes and regulations, and all such orders or decrees presently in effect or that may be enacted prior to Final Acceptance or which in any way affect the prosecution of the Work.

14.2.1.1. The Contractor shall at all times observe and comply with all such laws, ordinances, safety codes, regulations, orders and decrees; and shall protect Owner and its representatives against any claim or liability arising from or based on the violation of any such law, ordinance, regulation, order, or decree, whether by himself, his employees, his subcontractors, his suppliers, his agents, or the employees of any of them or by anyone for whom Contractor is responsible.

14.2.1.2. When the United States Government pays all or any portion of the cost of the Work, the federal laws and the rules and regulations pursuant to such laws, if applicable, must be observed by the Contractor, and the Work may be subject to the inspection by any appropriate federal agency.

14.2.2. All costs related to compliance with all laws, rules and regulations enacted after bid opening date, shall be paid for by the Owner and any resulting adjustment to the Contract Price or the Contract Time shall be made by a Change Order to the Contract.

14.2.2.1. If Owner's Representative and Contractor are unable to agree on entitlement to, or on the amount or extent, if any, of any such adjustment, a Claim may be made therefore as provided in Article 11.5.

14.2.2.2. Payment under this paragraph is contingent to those situations not covered under Article 14.4.4.

14.3 Sanitary, Health and Safety Provisions

14.3.1. The Contractor shall comply with all Federal, Commonwealth and local laws, rules and regulations concerning construction safety and health standards and shall admit without delay any inspector from such health and safety agencies upon presentation of proper credentials.

14.3.2. Contractor shall provide and maintain in orderly sanitary condition such facilities as necessary for the use of his employees, in compliance with the Commonwealth Departments of Health and Labor and other bodies having jurisdiction.

14.3.3. The Contractor shall not require work to be performed under unsanitary, hazardous or dangerous conditions.

14.4 Labor Relations and Wages

14.4.1. The Contractor shall comply with all the applicable Federal and Commonwealth laws, rules and regulations concerning fair labor practices including minimum wages, work hours, equal employment opportunities, non-discrimination, civil rights, employment of minors, and other labor relation matters.

14.4.2. The minimum wage rates to be paid shall be according to the regulations of the Minimum Wage Board of the Puerto Rico Department of Labor as indicated in the latest issue of its mandatory decree at any time during the execution of the Project.

14.4.3. The Contractor shall pay weekly, in lawful money of the United States of America, including payment by check or direct deposit, the entire amount of wages, less legally authorized or mandated deductions, earned by each of the laborers and employees engaged in the Work.

14.4.3.1. The Contractor shall make available to the Owner for inspection the project payrolls and shall submit copies of such payrolls to the Owner when required.

14.4.3.2. Any irregularities noted will be brought to the attention of the Contractor by the Owner for appropriate corrective action and payment of any pending wages.

14.4.3.2.1. Should the Contractor fail to take the necessary action, he will be subject to such civil and criminal proceedings provided by law and regulations.

14.4.3.3. Payment of wages to laborers and employees of the Contractor for their work shall have preference over the payment of other debts of the Contractor, except as otherwise established by law.

14.4.4. If during the term of the Contract, federal minimum wages are increased and said increase is applied to Puerto Rico, or if labor costs and/or fringe benefits are increased by local legislation, the cost of the increase in the Work shall be considered as a Change Order and proven cost increases, including fringe benefits and insurance costs, shall be paid to the Contractor, unless those increases have been legislated, or included as part of a resolution, by either the Commonwealth or Federal Legislative chambers prior to the bid opening date. If after the bid opening date, new local legislation or regulation is imposed which directly increases Contractor’s costs of materials or transportation, the Contractor may present a Claim under Article 11.5 for such increases. Such increases in costs must be evidenced and substantiated by the Contractor.

14.4.4.1. If Owner's Representative and Contractor are unable to agree as to entitlement, amount or extent, if any, of any such adjustment under Article 14.4.4, a Claim may be made therefore as provided in Article 11.5.

14.5 Environmental Protection

14.5.1. Contractor shall comply with all Federal, Commonwealth and local environmental laws and regulations.

14.5.1.1. Contractor shall take all necessary precautions to prevent pollution of streams, lakes, ponds, and reservoirs with fuels, oil, bitumen, chemicals, or other harmful materials and to prevent pollution of the atmosphere with particulate or gaseous matter.

14.5.2. Unless otherwise approved in writing by the Owner, construction operations in rivers, streams, lakes and other bodies of water shall be restricted to those areas where channel changes are shown on the plans and to those areas which must be entered for the construction of temporary or permanent structures.

14.5.2.1. Rivers, streams, lakes and reservoirs shall be promptly cleared of all false work, piling, debris, or other obstructions placed therein or caused by the construction operations.

14.5.3. Frequent fording of live streams with construction equipment will not be permitted. Temporary bridges or other structures shall be used wherever an appreciable number of stream crossings are necessary.

14.5.3.1. Unless otherwise approved in writing by the Owner, mechanized equipment shall not be operated in live streams except as may be required to construct channel changes and temporary or permanent structures.

14.5.4. Contractor shall comply with all the requirements regarding soil erosion and water pollution control included in the Environmental Quality Board's regulations, the Owner's other standard specifications, the Plans and other Contract Documents.

14.5.5. If the Contractor should encounter or expose during construction operations any abnormal condition, which may indicate the presence of a hazardous and/or toxic waste, the Contractor shall proceed in accordance with Article 4.7.

14.5.5.1. Abnormal conditions shall include, but shall not be limited, to the following, presence of barrels, discolored earth, metal or wood; obnoxious or unusual odors; visible fumes; excessively hot earth; smoke; or any other condition which appears to be a possible indication of hazardous and/or toxic waste.

14.6 Construction Over or Adjacent to Navigable Waters

14.6.1. All Work and related activity, over, on or adjacent to navigable waters shall be conducted so that free navigation of the waterways will not be interfered with and that the existing navigable depths and clearances will not be impaired except as allowed by permit issued by the U.S. Coast Guard and/or the U.S. Army Corps of Engineers, as applicable.

14.7 Traffic Protection Devices

14.7.1. The Contractor, when applicable, shall provide, erect and maintain all necessary advance warning signs, barricades, suitable and sufficient lights, danger signals, signs, and other traffic control devices; shall provide a sufficient number of watchmen and flag persons, and shall take all necessary precautions for the protection of the Work and the safety of the public in accordance with the plans and other Contract Documents.

14.8 Use of Explosives

14.8.1. When the use of explosives is necessary for the prosecution of the Work, the Contractor shall comply with all the Laws and Regulations concerning the use, storage, transporting, handling and detonating of explosives.

14.8.1.1. The Contractor shall exercise the utmost care with the explosives so as not to endanger life and property and he shall be responsible for any and all damages that may result from his use of explosives.

14.8.2. Prior to initiating the use of explosives, the Contractor shall submit to the Owner evidence that his comprehensive general liability insurance required under Article 3 provides coverage for the use of explosives and blasting.

14.8.3. Blasting operations shall be conducted under the most careful and experienced supervision. The Contractor shall keep the Owner informed as to his drilling, blasting and demolition operations.

14.8.4. The Contractor shall furnish and erect special signs to warn the public of his blasting operations.

14.8.4.1. Such signs shall be placed at appropriate points within the Project limits, shall be maintained so as to be clearly evident to the public during all critical periods of the blasting operations and, if blasting is by means of electric detonators, shall include a warning statement to have radio transmitters turned off.

14.8.5. The Contractor shall notify each property owner and public utility company having structures in the proximity to the Site and the Work of his intention to use explosives.

14.8.5.1. Such notice shall be given sufficiently in advance to enable the parties being warned to take steps necessary to protect persons and property from injury.

14.9 Protection and Restoration of Property

14.9.1. The Contractor shall be responsible for the preservation of all public and private property, and shall carefully protect from disturbance or damages all land monuments and property marks until the Owner has witnessed or otherwise referenced their location, and shall not move them until directed.

14.9.2 When the Contractor's excavating operations encounter items of archeological interest such as remains of pre-columbine people's dwelling sites or artifacts of historical, paleontological or archeological significance, operations in the vicinity of such findings shall be temporarily discontinued and the Owner notified.

14.9.2.1. The Owner will contact the proper authorities to determine the disposition thereof.

14.9.2.2. When directed by the Owner, the Contractor shall excavate the site in such a manner as to preserve the artifacts encountered and shall remove them for delivery to the custody of the proper authorities.

14.9.2.2.1. Such specialized excavation and time delay costs, if any, will be considered and paid for as Extra Work unless the Owner elects to undertake such recovery work by other means.

14.9.2.2.2. If the Owner elects to perform this work by other means, he shall be responsible to the Contractor for costs associated with delay to the Work, only if said delay affects the critical path.

14.9.3 Contractor shall be responsible for all damages or injury to property of any character during the prosecution of the Work resulting from any act, omission, neglect or misconduct in the Contractor's manner or method of executing the Work, or at any time due to deficient work or materials. The Contractor's responsibility will not be released until the Project has been completed and accepted.

14.9.4 When any direct or indirect damage or injury is caused to public or private property by or on account of an act, omission, neglect or misconduct in the execution of the work, or as a consequence of the non-execution thereof, by Contractor, such property shall be restored at the Contractor's expense to a condition similar or equal

to that existing before such damage or injury was caused by repairing, rebuilding or otherwise restoring the same, or Contractor shall make good such damage or injury in a manner acceptable to owner.

14.9.5 Contractor shall comply with all necessary soil erosion and water pollution control measures, as indicated in the Contract Documents, and shall exercise due care in their implementation, to avoid causing erosion and drainage problems in all areas inside and outside the Project construction limits.

14.10 Forest Protection

14.10.1. In carrying out Work or related activity within or adjacent to Commonwealth or National Forests, the Contractor shall comply with all regulations of the Commonwealth Fire Service, Puerto Rico Department of Agriculture, United States Forest Service or other authority having jurisdiction, governing the protection of forests and the carrying out of Work within forests, and shall observe all sanitary laws and regulations with respect to the performance of work in forest areas.

14.10.1.1. Contractor shall keep all areas affected by construction related activities in an orderly condition, dispose of all refuse, obtain permits for the construction and maintenance of all construction camps, stores, warehouses, residences, latrines, cesspools, septic tanks, and other structures in accordance with the requirements of the agency having jurisdiction of the forest.

14.10.2 The Contractor shall take all reasonable precautions to prevent and suppress forest fires and shall require his employees and subcontractors, both independently and at the request of forest officials, to do all that is reasonably within their power to prevent and suppress and to assist in the prevention and suppressing forest fires. They shall make every possible effort to notify a forest official at the earliest possible moment of the location and extent of any fire seen by them.

14.11 Responsibility for Damage Claims

14.11.1. The Contractor shall indemnify and save harmless the Owner as follows:

14.11.1.1. The Contractor for itself, agents, employees, successors and assigns agrees to save harmless the Owner, its Officers, Agents, Employees and Architect/Engineer from and against any and all claims, demands and/or suits, except as stated below, whether judicial or extra judicial for any cost whatever arising out or related to the execution of the Contract, and it's insurers shall defend the Owner, its Officers, agents, Employees and Architect/Engineer from such claims, demands and/or suits and shall bear all the expenses for such defense contemplated within the coverage limits provided by the Contractor's general liability policy, except where such claims, demands and/or suits are due solely to the negligence of the Owner, its Officers, Agents, employees and negligence, errors and/or omissions of the work performed by the Architect/Engineer. In case that the amount to be paid exceeds the policy amount, then the Contractor shall be responsible for the exceeding amount.

14.12 Contractor's Responsibility for Work

14.12.1. Until the final written acceptance of the Work by the Owner, the Work shall be under the charge and care of the Contractor. He shall take every necessary precaution to protect it from injury or damage to any part thereof by the action of the elements or from any other cause whether arising from the execution or non-execution of the Work.

14.12.2. The Contractor shall rebuild, repair, restore and make good any damages to any portion of the Work

occasioned by any of the causes indicated in paragraph 14.12.1, above, before its completion and acceptance, and shall bear the expense thereof, except damages to the Work due to unforeseeable causes beyond the control of and without fault or negligence of the Contractor, including but not restricted to acts of God, such as earthquake, hurricane, tidal wave, major flooding or other cataclysmic phenomenon of nature, acts of the public enemy or of the government.

14.12.3. In case of suspension of Work from any cause whatsoever, the Contractor shall be responsible for the Work under the Contract and shall take such precautions as may be necessary to prevent damage to the Project, provide suitable drainage and erect necessary temporary structures, signs or other facilities.

14.12.3.1. During such period of suspension of work, the Contractor shall properly and continuously maintain in acceptable growing conditions all living material in newly established plantings, seeding, and sodding furnished under his contract, and shall take adequate precautions to protect new tree growth and other important vegetative growth against injury.

14.12.3.2. All costs for the work described above attributable to a suspension by the Owner shall be reimbursed to the Contractor by the Owner.

14.12.3.3. If the temporary suspension of Work is caused by the Contractor, then he will bear the expenses in such event.

14.12.4. When Work is suspended by the Contractor without authorization from the Owner, or is suspended by the Owner due to the fault of the Contractor, the costs of providing the protective measures specified in paragraph 14.12.3, above, during the period of suspension shall be borne by the Contractor.

14.13 Emergencies

14.13.1. In any emergency affecting the safety of persons or property, the Contractor shall act at his discretion to prevent damage, injury, or loss.

14.13.1.1. Any additional compensation or extension of time claimed by the Contractor on account of emergency Work shall be determined as provided in Article 11. Additional costs incurred by the Contractor in a case of an emergency need not be authorized by the Owner’s Representative when there is insufficient time to seek Owner’s authorization.

14.13.2. If an emergency affects the safety of persons or property at the Site or property adjacent thereto, Contractor is obligated to act to prevent threatened damage, injury, or loss. Either the Owner or the Contractor can declare an emergency.

14.13.2.1. Contractor shall give Owner's Representative prompt notice if Contractor believes that any significant changes in the Work or variations from what is provided by the Contract Documents have been caused by the emergency or are required as a result thereof.

14.13.2.1.1. If Owner's Representative determines that an amendment to the Contract Price or Contract Time is required because of the action taken by Contractor in response to such an emergency, a Work Change Directive, a Change Order or an Extra Work Order will be issued.

ARTICLE 15 - SUSPENSION OF WORK AND TERMINATION

15.1 Suspension of Work

15.1.1. At any time and without cause, Owner may, with a minimum of seven (7) calendar days written notice, suspend the Work or any portion thereof for a period of not more than ninety (90) consecutive days by notice in writing to Contractor and Architect/Engineer. Said notice will fix the date on which Work will be resumed. Contractor shall resume the Work on the date so fixed. Contractor shall be allowed an adjustment in the Contract Price or an extension of the Contract Time, or both, directly attributable to any such suspension if Contractor makes a timely Claim therefore as provided in Article 11.5. Said adjustment shall be computed based on the following factors:

15.1.1.1. Fixed Project expenses (after all reasonable reduction and mitigation of expenses) for the period of the Work stoppage, such as: (i) the Contractor's and subcontractor's supervisory, administrative, and operations personnel salaries, together with their corresponding fringe benefits and insurance costs if this personnel has been kept in the Contractor's payroll and are not gainfully utilized by Contractor or someone else elsewhere, (ii) utilities, (iii) Project's fixed equipment, and (iv) miscellaneous expenses such as safety, and vigilance.

15.1.1.1.1. At any time during the suspension, the Owner may order the Contractor to demobilize, paying the Contractor the de-mobilization costs and any future mobilization costs to re-start the Project.

15.1.1.1.2. Cancellation costs and cost increases for materials already ordered which had to be canceled and reordered, provided that such costs are not in excess of reasonable market prices.

15.1.1.1.3. Differential increases in labor costs, and its corresponding fringe and insurance benefits, in the Project for the period that the work is stopped.

15.1.1.1.4. Construction equipment use costs for the stoppage period if said equipment remains stationed at the site (idle equipment rates), or transportation costs if the Owner orders in writing that it be removed from the site. If the equipment is owned by the Contractor, he will be paid the cost (depreciation) of said equipment.

15.1.1.1.5. Insurance costs whose rates are based on the time such insurance is in effect, such as Builder's Risk Insurance, for the period that the work is stopped.

15.1.1.1.6. Contractor's overhead and profit in the amount equivalent to fifteen percent (15%) of all expenses detailed above.

15.1.1.1.7. An amount of the Contractor's main office overhead costs (exclusively in this instance and solely related to suspension) reached by mutual accord between the parties or if no mutual accord can be reached, the cost for main office overhead shall be computed using the Eichleay formula using as base the previous two (2) years of Contractor’s main office overhead cost taken from the previous two (2) years financial statements which have been externally audited by a recognized CPA. If the Contractor does not have financial statements prepared externally by a recognized CPA, he must prepare them in order to be able to present a claim for this purpose.

15.1.1.1.8. Contractor shall exert his best effort to mitigate the costs included in this Article 15.1.1.

15.1.2. At any time, the Owner's Representative may, with a minimum of seven (7) calendar days written

notice, for the following causes suspend the Work or part of the Work due to:

15.1.2.1. the repeated and persistence failure of the Contractor to perform his contractual obligations;

15.1.2.2. the repeated and persistent failure of the Contractor to have sufficient labor and the trades necessary to maintain the quality and progress required in the Contract Documents;

15.1.2.3. the repeated and persistent failure of the Contractor to have sufficient material necessary to maintain the quality and progress required in the Contract Documents;

15.1.2.4. the repeated and persistent failure of the Contractor to have sufficient equipment and type of equipment necessary to maintain the quality and progress required in the Contract Documents.

15.1.3. The Contractor will be responsible for all of his costs due the suspension of the Work indicated in Article 15.1.2 and there will be no increase in Contract Price or extension to the Contract Time as a result of such suspension for cause.

15.1.3.1. The suspension for cause under Article 15.1.2 will last until the Contractor remedies the situation or until termination.

15.1.3.2. The Contractor shall also be responsible for the inspection costs made necessary by overtime work to restore the project to its intended schedule due to delays caused by the actions mentioned in Article 15.1.2. Said costs will consist of the actual cost paid therefore by and to the inspector, if his presence is required or necessary.

15.1.4. At any time, the Owner's Representative or the Contractor may suspend the work or part of the work without advanced notice due to any danger or potential danger that may exist to life, limb or property or any emergency whether on the Site or off the Site.

15.1.4.1. The Contractor will be responsible for all of his costs due the suspension and there will be no time extension to the Contract Time if the suspension is due to the failure of the Contractor to perform his contractual obligations.

15.1.4.2. The Owner will compensate the reasonable costs incurred by Contractor if the suspension is due to causes other than the failure of the Contractor to perform his contractual obligations and such causes are attributable to Owner.

15.1.5. In case of suspension of Work for any cause whatsoever, the Contractor shall be responsible for the Work under the Contract and shall take such precautions as may be necessary to prevent damage to the Project, provide suitable drainage and erect necessary temporary structures, signs or other facilities.

15.1.5.1. During such period of suspension, the Contractor shall properly and continuously maintain in acceptable growing conditions all living material in newly established plantings, seeding, and sodding furnished under his contract, and shall take adequate precautions to protect new tree growth and other important vegetative growth against injury.

15.1.5.2. When Work is suspended by the Contractor without authorization from the Owner, or is suspended by

the Owner due to the causes specified in Article 15.1.2, the costs of providing the protective measures specified in Article 15.1.5. and 15.1.5.1, during the period of suspension shall be borne by the Contractor.

15.1.5.3. The Contractor will be responsible for all of its costs due to the suspension and there will be no time extension to the Contract Time if the suspension is due to the failure of the Contractor to perform its contractual obligations, or other causes attributable to Contractor.

15.1.5.4 The Owner will compensate the reasonable costs incurred by Contractor if the suspension is due to causes other than the failure of the Contractor to perform his contractual obligations and such causes are attributable to Owner.

15.2 Owner May Terminate for Cause

15.2.1. The occurrence of any one or more of the following events will justify termination for cause:

15.2.1.1. Contractor's persistent or repeated failure to perform the Work in accordance with the Contract Documents (including, but not limited to, failure to supply sufficient skilled workers or suitable materials or equipment or failure to adhere to the progress schedule established under the Contract, as adjusted from time to time); or

15.2.1.2. Contractor's egregious disregard of Laws or Regulations of any public body having jurisdiction; or

15.2.1.3. Contractor's persistent or repeated disregard of the authority of Architect/Engineer, Owner or Owner's Representative; or

15.2.1.4. Contractor's persistent and repeated violation of any substantial provisions of the Contract Documents; and does not start curing and without interruption continues to cure same prior to termination.

15.2.1.5. Contractor is adjudged bankrupt, or is a party to a fraud; or

15.2.1.6. Contractor should make a general assignment for the benefit of his creditors; or

15.2.1.7. A receiver be appointed on account of the Contractor's insolvency; or

15.2.1.8. An attachment is made upon a substantial amount the Contractor's properties utilized to perform the Work, and it is not lifted, or the claim otherwise secured, within five (5) working days thereafter; or

15.2.1.9. Contractor persistently fails to make prompt payment to subcontractors, as per Article 6.21.2, or for materials, services, or labor already paid to Contractor by the Owner; or

15.2.1.10. Contractor abandons or discontinues the prosecution of the Work without Owner's written authorization.

15.2.1.10.1 Nevertheless, Contractor may discontinue the prosecution of the Work during: (i) Holy Thursday; (ii) the Friday after Thanksgiving; and (iii) the time period commencing on the Saturday before Christmas Day (December 25) and ending on the Sunday after Three Kings' Day (January 6) without incurring in an event of default due to discontinuance of the Work.

15.2.2. If one or more of the events identified in Article 15.2.1 occur, Owner may, after giving Contractor (and the

surety, if any) seven (7) days written notice to cure such default, terminate the services of Contractor, exclude Contractor from the Site, and take possession of the Work and of all Contractor's tools and appliances at the Site, and use the same to the full extent they could be used by Contractor (without liability to Contractor for trespass or conversion), incorporate in the Work all materials and equipment stored at the Site or for which Owner has paid Contractor but which are stored elsewhere, and finish the Work as Owner may deem expedient. In such case, Contractor shall not be entitled to receive any further payment until the Work is finished.

15.2.3. In Lump Sum contracts, if the unpaid balance of the Contract Price exceeds all claims, costs, losses, and damages (including but not limited to all fees and charges of engineers, architects, attorneys, and other professionals and all court or arbitration or other dispute resolution costs) sustained by Owner arising out of or relating to completing the Work, such excess will be paid to Contractor.

15.2.4. If such claims, costs, losses, and damages exceed such unpaid balance, Contractor shall pay the difference to Owner. Such claims, costs, losses, and damages incurred by Owner will be reviewed by Owner's Representative as to their reasonableness and, when so approved by Owner's Representative, incorporated in a Change Order or Extra Work Order. When exercising any rights or remedies under this paragraph Owner shall not be required to obtain the lowest price for the Work performed, but shall assume all reasonable means to complete the work at a reasonable cost.

15.2.5. When Contractor's services have been so terminated by Owner, the termination will not affect any rights or remedies of Owner against Contractor then existing or which may thereafter accrue. Any retention or payment of moneys due Contractor by Owner will not release Contractor from liability.

15.2.5.1. Termination of the Contract, as stated above, will not release the Contractor of his responsibilities for the Work completed, nor shall said termination release surety from its obligations.

15.3 Owner May Terminate the Contract For Convenience

15.3.1. Upon seven (7) days written notice to Contractor and Architect/Engineer, Owner may, without cause and without prejudice to any other right or remedy of Owner, elect to terminate the Contract for convenience.

15.3.2. After receipt of notice of termination for convenience from the Owner, the Contractor shall submit, within sixty (60) calendar days of the effective termination date, a Claim for compensation damages and/or costs. In such Claim, if presented, Contractor shall be paid, without duplication of any items, the following:

15.3.2.1. In lump sum contracts, the work performed and accepted by the Owner shall be paid in accordance with the schedule of values approved by the Owner.

15.3.2.2. The actual cost of all acceptable materials for which orders have been placed by the Contractor for use under this Contract, provided that, if required by the Owner, the Contractor shall make every reasonable effort to cancel such orders. If said orders can be canceled, the Owner shall pay for all restocking, or other charges, associated with said cancellation.

15.3.2.3. The actual cost of acceptable raw material ordered or purchased for fabrication, or materials already fabricated, whether those materials are located in the shop, the project, or in transit.

15.3.2.4. The actual amounts paid by the Contractor for construction equipment rentals up to the time of

termination, plus any amounts accrued, or payable, under written contracts for the rental of such equipment. Contractor shall make every possible effort to cancel any such contracts. In the event that the rental contracts can be canceled by the Contractor, the Owner shall pay for all reasonable costs incurred directly caused by the rental cancellation. If the equipment is owned by the Contractor, he will be paid the cost (depreciation) of said equipment.

15.3.2.5. The actual costs disbursed by to the Contractor of bonds, insurance, taxes, and deposits required under the Contract, unless previously paid by Owner.

15.3.2.6. Contractor's overhead and profit in the amount equivalent to fifteen percent (15%) of all payments made under Articles 15.3.2.2 to 15.3.2.5.

15.3.2.7. Contractor shall exert his best effort to mitigate the costs mentioned in Articles 15.3.2.2 to 15.3.2.5.

15.3.2.7.1. From the total sum of all the costs indicated in Articles 15.3.2.2 to 15.3.2.6. there shall be deducted all payments therefore previously made and all proper charges to the Contractor in relation therewith.

15.3.3. In the event that the Work is suspended under Article 15.1, thereby stopped for a period of time, and after said suspension is cancelled, the amounts due to the Contractor under the Contract will be first calculated for the suspension period as per Article 15.1 hereunder and then calculated for the cancellation afterwards as per Article 15.3, hereunder. The total amount due the Contractor will be the sum of both.

15.3.4. If the Contract is terminated for convenience, the Owner shall assume all security, and insurance of the project on the effective date of the termination, or cancellation.

15.3.5. Termination of the Contract for convenience, as stated above, will not release Contractor from his responsibilities for the Work completed, nor shall it release his surety of its obligations.

15.3.6. Contractor shall not be entitled to payment on account of loss of anticipated or expected profits or revenues or other economic loss arising out of or resulting from such termination for convenience under this Article 15.3.

15.4 Contractor's Right to Terminate the Contract

15.4.1. The Contractor has the right to Terminate the Contract and recover from the Owner payment for all work executed as specified in Article 15.3.2, herein, if the Owner:

15.4.1.1. substantially stops the work for any reason whatsoever through no act, or fault, of the Contractor for a period of ninety (90) days starting from the written stoppage notice of the Owner and/or the Owner's Representative, or

15.4.1.2. fails to pay the duly approved Request for Payments within eighty (80) calendar days after the same was due.

15.4.2 The foregoing provisions are in addition to, and not in limitation of the rights of the Contractor under any other provisions of the Contract.

ARTICLE 16 - DISPUTE RESOLUTION

16.1 Disputes

16.1.1. In case of any timely Claim, Dispute or other matter involving the interpretation of the Contract Documents, a change in the Contract Sum, and or an Extension of Contract Time, and other matters in question arising out of, or relating to this Contract or the breach thereof, except for Claims which have been waived by the acceptance of final payment, shall be submitted to and decided first by the Owner's Representative as provided in Article 11.5.

16.1.2. If the Dispute submitted to the Owner's Representative as provided for in Article 11.5 is not decided by him within the thirty (30) day period established therein, the Claim shall be deemed rejected.

16.1.3. If the party establishing the Claim is not satisfied with the decision or automatic rejection by the Owner's Representative, the party will have fifteen (15) days to appeal the decision to the Chief of Construction, or equivalent division head, of the Owner.

16.1.4. The Chief of Construction shall have a period of thirty (30) days from the date of receipt of the notice of appeal during which he must render a decision.

16.1.4.1. However, if the Chief of Construction requires additional time to review the Claim, because of the nature or complexity of the Claim or if additional documents and/or information are needed from the Contractor to make a determination, the Chief of Construction shall submit, within five (5) calendar days of receipt of the notice of appeal, a written notice with an estimate of the additional time needed to review said claim and its justification. This additional time, shall not exceed thirty (30) days, unless more time is agreed upon by the parties.

16.1.4.2. If the Chief of Construction does not render a decision within the time allotted, including extensions, then the Claim shall be deemed rejected.

16.1.5. If the Contractor is not satisfied with the decision or automatic rejection by the Chief of Construction, the Claim shall be referred to the Owner and the Contractor. The parties will meet for negotiations within ten (10) working days of the notice of referral of said Claim. If the Dispute has not been resolved within thirty (30) days after said referral (which may be extended by mutual agreement) and subject to any rights to injunctive relief and unless otherwise specifically provided for herein, the parties shall proceed in accordance with Article 16.2.

16.1.6 Contractor shall carry on the Work and adhere to the progress schedule during all Disputes or disagreements with Owner. The Owner will continue making payments under the Contract for Work performed that is not in Dispute.

16.1.7. No Work shall be delayed or postponed pending resolution of any Disputes or disagreement unless Owner and Contractor otherwise agree in writing.

16.2 Remedies

16.2.1. All Disputes not resolved by the method indicated in Article 16.1, upon written agreement of the parties, shall be submitted to non-binding mediation as indicated in Article 16.3. Either party may, at any time, give written notice to the other party that it does not wish to mediate or to continue to mediate a Dispute. Such notice shall conclude the mediation process.

16.2.2. If the parties fail to agree to submit the Dispute to mediation, or one party decides to cancel the mediation after the mediation has started, or if the mediation process does not resolve all Disputed matters, then the remaining Disputes shall be decided by arbitration, upon timely demand for arbitration, notified by one party to the other within ten (10) days after the mediation process has concluded, if the amount of the claim does not exceed the limits established in Article 16.4.1. The mediation process shall conclude on the date notice is delivered by one party to the other stating that the party does not wish to mediate or to continue to mediate. Any undecided Disputes that exceed the limits established in Article 16.4.1, will be decided by the General Court of Justice of Puerto Rico.

16.3 Mediation

16.3.1. If the parties agree to mediate the Dispute they may chose between:

16.3.1.1. a mutually agreed mediation procedure; or

16.3.1.2. a mediation procedure under the supervision of the Bureau of Claim Resolution by Alternate Methods the Office of the General Court of Justice; or

16.3.1.3. a mediation procedure administered by the American Arbitration Association under its Construction Industry Mediation Rules.

16.3.2. All costs incurred as a result of the mediation shall be borne equally by the parties, unless the mediator orders otherwise in accordance to Article 16.3.4.

16.3.3. The parties will be required to exchange their positions as to the Dispute, fully and in good faith, with a detailed description of the facts and of the applicable law and shall fully exchange supporting documents. If after agreeing to mediate a Dispute a party is substantially unprepared to participate in the proceedings, or fails to participate in good faith, the Mediator at his discretion may require said party to pay all or part of the costs of the mediation incurred by the other party due to the non-compliance with this Article.

16.4 Arbitration

16.4.1. Disputes to be arbitrated shall be limited to those Disputes, which when all sums claimed therefore under the Contract are added, total an aggregate sum of five percent (5%) or less of the Contract Price or $500,000.00 or less, whichever is lower. Only such Disputes where the aggregate amount claimed is below said threshold shall be resolved through the arbitration procedures established in this Article 16.4. The aggregate sum shall be determined on the date of the notice of the demand for arbitration taking into consideration all pending Disputes regarding the Contract submitted by the Contractor pursuant to Articles 11.5 and 16. In order to qualify for resolution thru arbitration, all issues and Claims regarding liability and damages relating to a particular Dispute must be submitted together, within the same arbitration proceeding. The parties are specifically prohibited from submitting the issue of liability to arbitration and thereafter submitting the issue of damages (regarding the same Dispute) to another arbitration proceeding or to the court.

16.4.1.1. The $500,000.00 threshold will be adjusted every five (5) years. The adjustment will be based on the Consumer Price Index (CPI) published by the Government of Puerto Rico. The base year for such adjustment shall be the year 2010.

16.4.1.2. If Contractor invokes the provisions of this Article 16.4, but at a later date submits additional Claims to the Owner under the same Contract, pursuant to Article 11.5 and/or Article 16, for an additional sum which, if added to the amount claimed under the original Dispute(s), surpasses the threshold amount established in Article 16.4.1, then said additional Disputes that surpass the threshold may not be submitted to arbitration and shall be decided by the General Court of Justice of Puerto Rico. Nevertheless, the already pending arbitration proceedings under Article 16.4 shall continue until concluded. If additional Disputes are submitted after the arbitration proceedings are concluded and final award has been entered, then the amounts of the original Claims that were arbitrated and concluded shall not count towards the threshold stated in Article 16.4.1.

16.4.2. **Procedure For Binding Arbitration**.

16.4.2.1. Contractor shall submit to the Owner, together with the notice of demand for arbitration of a Dispute, a list of no less than five (5) proposed arbitrators, together with their respective curriculum vitae and a disclosure statement from each as to possible conflicts of interest.

16.4.2.2. Within five (5) working days of receipt of the notice of demand for arbitration, Owner shall either: (i) select one (1) arbitrator from the Contractor's list, or (ii) if all arbitrators proposed by Contractor are unacceptable to Owner, submit to Contractor a list of no less than five (5) proposed arbitrators, together with their respective curriculum vitae and a disclosure statement from each as to possible conflicts of interest.

16.4.2.3. Within five (5) working days of receipt of the Owner's list, contractor shall either: (i) select one (1) arbitrator from such list or (ii) reject all arbitrators from the Owner's list. If within the following ten (10) days the parties cannot agree as to an arbitrator or a panel of arbitrators, then each party within the following five (5) days will unilaterally appoint and notify to the other one arbitrator, and the two (2) arbitrators so appointed shall within ten (10) days after the appointment of both arbitrators select a third arbitrator and notify the Owner and the Contractor of said selection, and the three (3) arbitrators shall constitute the panel of arbitrators that shall decide the Dispute. The arbitrators so appointed or selected need not be on the original lists of arbitrators. Within ten (10) days of the selection of the third arbitrator, each arbitrator shall notify Owner and Contractor their respective curriculum vitae and statement as to possible bias or conflict of interest.

16.4.2.4. The arbitration proceedings shall be conducted under the provisions of the Puerto Rico Arbitration Act, Act No. 376 of May 8, 1951, as amended.

16.4.3. **Award**

16.4.3.1. The award entered need not include written determinations of fact and conclusions of law and the award shall be final and not be reviewable or appealable due to errors of fact or of law. Nevertheless, the arbitrators will endeavor to ascertain the facts and follow the law.

ARTICLE 17 -MISCELLANEOUS

17.1 Governing Law. The Contract Documents, and all questions relating to their validity, performance, interpretation and enforcement, shall be governed by and construed in accordance with the laws of the

Commonwealth of Puerto Rico. Any legal action brought concerning the above shall be brought in accordance with the contract and thereafter exclusively in the courts of the Commonwealth of Puerto Rico.

17.2 Federal Funds

17.2.1. When the United States government or any of its agencies finances or pays for all or any portion of the cost of the Work, federal laws and the applicable rules and regulations must be observed by the Contractor. The Owner will identify in the bid documents the program providing such funds.

17.2.2. If the Contract Documents include a specific provisions issued by such federal funding agency in case of conflict with other provisions of the Contract Documents, said federally issued provisions shall govern.

17.2.3. Unless specified elsewhere in the Contract Documents, the funding federal agency is not a party to this Contract.

17.2.4 When the United States government funds Work covered by the Contract Documents, the Work shall be under the supervision of the Owner but subject to the inspection by the appropriate Federal agency and in accordance with the applicable Federal statutes and rules and regulations.

17.2.4.1. Such inspection shall in no way make the Federal Government a party to this Contract and will in no way interfere with the rights of either party hereunder.

17.2.4.2. The Contractor shall extend the same courtesies to the representatives of the Federal government as required to be extended to representatives of the Commonwealth government.

17.3 Notice

17.3.1. Unless otherwise specified in the Agreement or in the Contract Documents, written notice shall be deemed to have been duly served if delivered:

17.3.1.1. to Contractor if delivered in person to the individual, to a member or partner of the firm or entity, or to an officer of the corporation for which it was intended; or if delivered at, or sent by registered or certified mail or by courier service providing proof of delivery to, the last business address known to the party giving notice.

17.3.1.2. to Owner if delivered in person to the Owner's Representative or to the Project Inspector; or if delivered at, or sent by registered or certified mail or by courier service providing proof of delivery to, the last business address known to the party giving notice with the requirements established in Article 17.3.2.

17.3.2. All notices whereby a consent, approval or action is required to be performed by the recipient within a specific period shall include, in bold and capitalized font, at the top of the transmittal communication the following legend: "IMPORTANT RIGHTS MAY BE LOST BY FAILURE OF [NAME OF PARTY] TO ACT PROMPTLY. SPECIFIC ACTION(S) AND/OR APPROVAL(S) ARE HEREIN REQUESTED. IN CASE OF AUTOMATIC APPROVAL DUE TO FAILURE TO ACT BY THE RECIPIENT THE NOTICE MUST STATE: THIS SUBMISSION WILL BE DEEMED APPROVED _____ BUSINESS DAYS AFTER RECEIPT BY [NAME OF PARTY] IF REJECTION IS NOT NOTIFIED TO [NAME OF SENDER]."

17.4 Computation of Time. When a period of time is to be computed for any purposes under the Contract Documents, the number of days within such period will exclude the first and include the last day. If the last day of

any such period falls on a Saturday, a Sunday or on a Holiday listed in Article 1.1.1.41, such day will be excluded from the computation.

17.5 Ownership of Documents. Any reports, information, findings, data, or any other documents prepared or assembled by the Contractor regarding the Contract will be the sole property of the Owner and shall not be made available by Contractor to any individual or organization without the prior written approval of the Owner, unless required by court order.

17.6 Personal Liability of Public Officials. In exercising rights or carrying out duties under the Contract, the Owner's Representative, the Contracting Officer, and their authorized representatives shall not be personally liable, it being understood that they act as the agents and representatives of Owner.

17.7 No Waiver of Legal Rights

17.7.1. In Unit Price Contracts, the Owner shall not be precluded or stopped by any measurement, estimate, or certificate made either before or after the completion and acceptance of the Work (and payment made therefore), from showing the true amount and character of the Work performed and materials furnished by the Contractor, nor from showing that any such measurement, estimate or certificate is untrue or is incorrectly made, nor from showing that the work or materials do not in fact conform to the Contract.

17.7.2. The Owner shall not be precluded or stopped, notwithstanding any such measurement, estimate or certificate and payment in accordance therewith, from recovering from the Contractor or his sureties, or both, such damage as Owner may have sustain by reason of his failure to comply with the terms of the Contract. Neither the acceptance by the Owner or any representative of the Owner nor any payment for or acceptance of the whole or any part of the Work, nor any extension of time, nor any possession taken by the Owner, shall operate as a waiver by Owner of any right hereunder.

17.7.3. A waiver by the Owner, or Contractor, of any breach of the Contract shall not be held to be a waiver as to any other breach.

17.7.4. The Contractor, shall be liable to the Owner for latent defects, fraud, (or such gross mistakes as may amount to fraud), and every contractual warranty or guaranty.

17.8 Cumulative Remedies. The duties and obligations imposed by these General Conditions and the rights and remedies available thereunder are in addition to, and are not to be construed in any way as a limitation of any rights and remedies available to any or all of them which are otherwise imposed or available by Laws or Regulations, by special warranty or guarantee, or by other provisions of the Contract Documents, and the provisions of this Article will be as effective as if repeated specifically in the Contract Documents in connection with each particular duty, obligation, right, and remedy to which they apply.

17.9 Successors and Assigns. The Owner and the Contractor each binds himself, his partners, successors, assigns and legal representatives to the other party hereto and to the partners, successors, assigns and legal representatives of such other party in respect to all covenants, agreements and obligations contained in the Contract Documents. Neither party to the Contract shall assign the Contract or sublet it as a whole without the written consent of the other, nor shall the Contractor assign any moneys due or to become due to him hereunder, without the previous written consent of the Owner.

17.10 Survival of Obligations. All representations, indemnifications, warranties, and guarantees made in,

required by, or given in accordance with the Contract Documents, as well as all continuing obligations indicated in the Contract Documents, will survive final payment, completion, and acceptance of the Work and termination or completion of the Agreement.

17.11 Language. These Uniform General Conditions were enacted by the Secretary and approved by the Governor of Puerto Rico in the English language, according to the Legislative authorization found in Law No. 1 of January 28, 1993.

17.12 Amendments. These Uniform General Conditions shall be amended whenever the Secretary deems it necessary in order to fulfill its purpose.

PART C. ADDITIONAL PROVISIONS

ARTICLE 1: SEPARABILITY CLAUSE; EFFECTIVENESS

1.1 Separability Clause. If any provision authorized in these regulations is declared unconstitutional or void by a Court of Competent jurisdiction, the remaining provisions of this Uniform General Conditions shall continue in effect.

1.2 Effectiveness. These Uniform General Conditions shall enter into effect thirty (30) days after having been filed and enacted by the Department of State, except with regard to Contracts whose Contract Price is paid by one or more Federal Agency in which case these Uniform General Condition, with regard to such Contracts, shall enter into effect immediately after said Federal Agencies, which provide such funds, consent in writing to their use as part of the Contract Documents. At the time of said effectiveness and from that moment forward, general conditions used and issued by a government agency, department, public corporation and instrumentality, may no longer be validly incorporated in Contracts for public works, with the exception of these Uniform General Conditions.

APPROVED ON , 2010, IN SAN JUAN, PUERTO RICO.

Eng. Rubén Hernández Gregorat, MEM, PE
Secretary
Department of Transportation and Public Works

OFICINA DEL PROCURADOR DEL CIUDADANO

OMBUDSMAN
1977
Gobierno de Puerto Rico

Hon. Iris Miriam Ruiz Class
Procuradora

8 de febrero de 2011

Hon. Rubén A. Hernández Gregorat
Secretario
Departamento de Transportación y Obras Públicas
PO Box 41269
San Juan, Puerto Rico 00940-1269

Re: NEG-11-00061
Proyecto de Condiciones Generales Uniformes para Obras Públicas

Estimado secretario Hernández Gregorat:

La Procuraduría de Pequeños Negocios, luego de analizar y hacer varias recomendaciones para el ***Proyecto de Condiciones Generales Uniformes para Obras Públicas***, presentado por el Departamento de Transportación y Obras Públicas, entiende que el mismo no tiene impacto sustancial que pueda afectar a los pequeños negocios.

Por otra parte, le recordamos que el Artículo 5 de la Ley Núm. 454 del 28 de diciembre de 2000, según enmendada, Ley de Flexibilidad Administrativa y Reglamentaria para el Pequeño Negocio (LFAR), impone a las agencia a deber de hacer públicas las copias del Análisis de Flexibilidad Reglamentaria en el Registro de Reglamentos del Departamento de Estado.

La falta de publicación del Análisis de Flexibilidad podría inducir que cualquier asociación de comerciantes y/o dueño de negocio radique en el Tribunal la impugnación del reglamento por no cumplir con los aspectos procesales establecidos en la LFAR. Este tipo de acción judicial requeriría que el pequeño negocio demuestre al Tribunal el impacto negativo que le puedan causar tanto el nuevo reglamento como la falta de un Análisis de Flexibilidad. El término para impugnar el referido reglamento es de un (1) año a partir de la fecha en que el mismo entre en vigor.

Por lo cual, la Procuraduría de Pequeños Negocios da un aval condicionado al reglamento propuesto y exhorta que el nuevo reglamento sea promulgado cumpliendo con todas las disposiciones en ley. Le exhortamos también a comunicarse con nuestra Procuraduría de tener alguna duda al respecto.

Respetuosamente,

Lcdo. Edison Negrón Ocasio
Procurador de Pequeños Negocios

Minillas Station PO Box 41088 San Juan, Puerto Rico 00940-1088
Tel. (787) 724-7373 • Fax (787) 724-7386
irismiriam.ruiz@opc.gobierno.pr

GOBIERNO DE PUERTO RICO
DEPARTAMENTO DE TRANSPORTACIÓN Y OBRAS PÚBLICAS

ANALISIS DE FELIXIBILIDAD ADMINISTRATIVA Y REGLAMENTARIA PARA PEQUEÑOS NEGOCIOS

UNIFORM GENERAL CONDITIONS FOR PUBLIC WORKS CONTRACTS

10 DE DICIEMBRE DE 2010

ANÁLISIS SOBRE FLEXIBILIDAD ADMINISTRATIVA Y
REGLAMENTARIA PARA PEQUEÑOS NEGOCIOS

UNIFORM GENERAL CONDITIONS FOR PUBLIC WORKS

I. BASE LEGAL, NECESIDAD Y OBJETIVOS DEL REGLAMENTO PROPUESTO

A. Base legal y necesidad de adoptar reglamentación

La Ley Núm. 198 del 15 de mayo de 1943, según enmendada, 22 L.P.R.A. §59, et seq., autorizó y ordenó al Secretario de Transportación y Obras Públicas preparar un pliego de condiciones generales para la contratación de obras públicas en Puerto Rico. Mediante esta Ley se creó el marco jurídico aplicable a la contratación de toda obra pública y se estableció un procedimiento para su promulgación.

Habiendo transcurrido ya varios años desde la aprobación del último pliego de condiciones generales, el Departamento de Transportación y Obras Públicas (DTOP) y la Autoridad de Acueductos y Alcantarillados (AAA), con el insumo y cooperación del Asociación de Contratistas Generales (AGC), Capítulo de Puerto Rico, se dieron a la tarea de confeccionar un nuevo pliego de condiciones generales mediante el cual se pretendió cobijar uniformemente a todas las agencias gubernamentales que realizan obra pública, además de crear unas nuevas reglas que se atemperaran a la experiencia adquirida colectivamente por las distintas agencias gubernamentales a través de años de contratación.

Para canalizar el proceso y poder alcanzar las metas resultó indispensable enmendar la referida Ley Núm. 198. A estos efectos se preparó un ante proyecto de Ley el cual luego de ser evaluado por distintas Comisiones (Comisión de Gobierno, Urbanismo e Infraestructura) y aprobado por el Senado y la Cámara de Representantes, fue aprobado por el Gobernador, convirtiéndose en la Ley Núm. 131 del 2 de septiembre de 2010.

Las enmiendas que trajo la referida Ley 131 fueron, en esencia, las siguientes:

(a) la actualización de conceptos contenidos en la Ley 198 para conformarlos a la realidad jurídica actual;

(b) la inclusión de disposiciones específicas para establecer que el Pliego de Condiciones Generales Uniformes regiría las relaciones contractuales en la construcción de toda obra pública que realicen las agencias, departamentos, corporaciones públicas y demás instrumentalidades gubernamentales con excepción de los Municipios; y

(c) disponer que el proceso de aprobación del las condiciones generales uniformes se haría de conformidad con las disposiciones de la Ley de Procedimiento Administrativo Uniforme, Ley Núm. 170 de 12 de agosto de 1988, según enmendada.

Las enmiendas realizadas a la Ley 198 sentaron las bases legales que permiten la aprobación de este pliego de Condiciones Generales Uniformes.

La contratación, coordinación y supervisión de obras públicas presenta problemas y situaciones de carácter recurrentes tanto para las agencias como para los contratistas. Para atender estos problemas era necesaria la creación y aprobación de un conjunto de disposiciones que especificaran cuales son las responsabilidades, obligaciones y poderes de cada una de las partes contratantes y sus competencias en los campos de actuación respectivos.

B. Propósito del reglamento

El Pliego de Condiciones Generales Uniformes pretende uniformar la contratación y administración de toda la obra de construcción pública en Puerto Rico y eliminar el desfase que existe en la contratación en las diferentes agencias. Por ser el resultado de un esfuerzo común y de la experiencia de las partes contratantes, el nuevo pliego de Condiciones Generales Uniformes busca proveer soluciones o avenidas de acción a problemas contractuales, administrativos y legales comunes o similares y sirve de instrumento para nivelar el terreno para todas las partes de manera que se protejan adecuadamente los intereses de cada uno de los contratantes.

II. APLICABILIDAD

Las disposiciones contenidas en el Pliego de Condiciones Generales Uniformes son de aplicación a cualquier persona natural o jurídica que suscriba un contrato con cualquier agencia de gobierno, departamento, corporación pública o cualquier instrumentalidad del Gobierno de Puerto Rico en el cual el objeto del contrato sea la consecución de obra pública. Sin embargo, las Condiciones Generales Uniformes no sólo son de aplicación al contratista principal de la obra que contrata con una agencia sino que existen clausulas que son aplicables a los subcontratistas y materialistas que trabajan en dicha Obra. El trabajo que un subcontratista o suplidor realice para el contratista general del Proyecto deberá ser de conformidad a un acuerdo en el que se le obligue al Subcontratista a cumplir con los términos y condiciones de seguridad, y otros de las Condiciones Generales y de los Documentos Contractuales que le sean aplicables.

III. POSIBLES IMPACTOS DE LA REGLAMENTACIÓN

A. Pequeños negocios impactados

Este Reglamento tiene un impacto en toda entidad que contrate para la ejecución de una obra pública sin importar el tamaño que tenga esa operación comercial. El factor determinante no es el tamaño del negocio sino el objeto del contrato, o sea que el contrato conlleve la ejecución de una obra pública incluyendo pero sin limitarse a trabajos de construcción, restauración y reparación de edificios o construcciones existentes o nuevas, así como la conservación y mantenimiento de los elementos construidos y los proveedores de diferentes servicios contratados para trabajar en Obras.

Para que un contratista principal pueda hacer negocios con el Gobierno Federal de Los Estados Unidos y con el Gobierno de Puerto Rico este debe estar inscrito en el Registro Único de Licitadores. Este requisito no es de aplicación a los sub-contratistas y materialistas del contratista principal del Proyecto ya que la relación contractual de los materialistas o subcontratistas no es con el gobierno o la agencia, sino que su relación contractual es con el Contratista Principal. El Registro de Licitadores o proveedores le brinda la oportunidad legítima a las corporaciones o entidades de participar del proceso de compra gubernamental "procurement" y la participación de las subastas como contratista principal. En Puerto Rico existen varios

registros de licitadores o proveedores siendo el más importante el Registro Único de Licitadores que es dirigido por la Administración de Servicios Generales (ASG). Este Registro es respaldado por la Ley 85 de Junio 2002, mejor conocida como "Ley Registro Único de Licitadores". Uno de los propósitos principales de este Registro es que el Gobierno puede asegurarse de lo siguiente: Adquirir bienes y servicios de empresas que cumplan con todas las requisiciones fiscales; Contratar empresas bonafides debidamente autorizadas para hacer negocios en Puerto Rico; Contratar Individuos que estén al día en sus obligaciones fiscales; Contratar individuos y empresas que cumplan con solvencia ética y moral; Contratar empresas que puedan cumplir con los bienes o servicios solicitados.

Muchos de los contratistas registrados en el Registro Único de Licitadores no cualifican como pequeños negocios ya que emplean a más de quince (15) personas, por tanto estos contratistas, aunque están impactados por el Reglamento de Condiciones Generales Uniformes, no están dentro del marco de los negocios cubiertos por este análisis. No empece lo anterior, existen algunos contratistas que sí cualifican como pequeños negocios, estos contratistas en su mayoría son corporaciones dedicadas a proyectos de construcción que envuelven construcción de carreteras, puentes edificios y otros. Por otro lado, los sub-contratistas y materialistas de los proyectos de construcción de obra pública si son usualmente pequeños negocios, sin embargo, a estos no les aplica el requisito de pertenecer al Registro Único de Licitadores pues su relación contractual no es con el gobierno o la agencia sino con el contratista general de la obra.

A pesar de no requerir que el sub contratista pertenezca al registro único de licitadores las Condiciones Generales Uniformes si establecen que el dueño podrá objetar la contratación de un subcontratista o materialista si existen razones validas. Las Condiciones Generales Uniformes le requieren al Contratista Principal de la obra presentarle al gobierno o agencia con la cual contrata un listado en el que se detallen el nombre de los subcontratistas y materialistas <u>principales</u> que pretende utilizar en las porciones <u>principales</u> del Proyecto. Por su parte la agencia o gobierno tiene el deber de investigar y notificar al Contratista si objeta alguno de los subcontratistas o suplidores contenidos en la lista provista por el contratista principal. La objeción por parte de la agencia no podrá ser arbitraria, la misma deberá ser una razonable y los fundamentos para la misma deberán constar por escrito. Las causas para objetar a un subcontratista, suplidor o materialista pueden incluir, entre otras: record de incumplimientos previos de un subcontratista o materialista con la agencia, record flagrante de violaciones de seguridad o desempeño insatisfactorio en pasados Proyectos con la agencia. Este procedimiento tiene el propósito de garantizar algún control sobre los contratistas o suplidores de Proyectos de manera que se evite que subcontratistas o materialistas ineficientes y de alto riesgo trabajen en la obra retrasándola y aumentando los costos los cual al fin y al cabo termina siendo pagado con fondos públicos. Por ende, esta es una medida de control que pretende asistir a la mejor utilización de fondos públicos.

B. <u>Impacto económico al pequeño negocio</u>

Las Condiciones Generales Uniformes son el resultado de un esfuerzo interagencial dirigido por el DTOP y la AAA, agencias que por su vasta experiencia en la contratación de obras públicas tomaron la iniciativa de crear un conjunto de disposiciones que regularan y uniformaran la contratación de Obra. Durante la redacción de las Condiciones Generales Uniformes se contó con la participación y colaboración activa de la ACG, Capítulo de Puerto Rico. La ACG es una asociación que agrupa a más de 350 compañías que generan un 80% de la construcción en nuestra Isla. Entre los propósitos y objetivos de la ACG se encuentra el combatir las prácticas injustas, apoyar al contratista y sus asociaciones para verificar condiciones insatisfactorias y estimular métodos de contratación que no expongan al contratista a riesgos.

El proceso de redacción de la Condiciones Generales Uniformes incluyó la celebración de innumerables reuniones para la discusión de las disposiciones. En dichas reuniones las partes presentaban sus posiciones en cuanto a cada disposición. Por ende el borrador que resultó del ejercicio contó con la aprobación del ACG. Debido a que la participación de la ACG en este proceso fue esencial para la redacción de las Condiciones Generales Uniformes, los derechos de los contratistas al igual que impacto económico de estas condiciones generales fueron escuchados para que dicho impacto a los contratistas fuera mínimo.

No obstante, por tratarse de fondos públicos que van a ser desembolsados para la construcción de obras públicas, el Gobierno tiene que tener unas garantías de que dicho dinero será invertido de manera eficiente. Por tal razón siempre que la agencia suscribe un contrato con un contratista general para construcción de obra pública a este se le requiere la prestación de ciertas fianzas y seguros que garanticen que los fondos resultaran en la construcción de la obra. Las Condiciones Generales Uniformes también exigen la prestación de estas garantías, sin embargo, las mismas fueron redactadas para nivelar el campo del juego y salvaguardar los derechos de todas las partes envueltas.

C. Zonas geográficas de mayor impacto

Las disposiciones de las Condiciones Generales Uniformes impactan directamente a los contratistas principales que contratan con el gobierno o agencia. Estos contratistas, los cuales tienen que ser licitadores autorizados, se encuentran ubicados a través de todo Puerto Rico. Las estadísticas de la ASG demuestran que la mayoría de los licitadores autorizados se encuentran ubicados en la zona metropolitana. Sin embargo, como mencionamos anteriormente la mayoría aunque no todos estos contratistas principales no se consideran pequeños negocios. La mayoría de los pequeños negocios que están en alguna manera impactados por la Condiciones Generales son los subcontratistas, suplidores o materialistas los cuales se encuentran distribuidos por toda la Isla aunque en su mayoría también están ubicados en el área metropolitana.

IV. CUMPLIMIENTO CON EL REGLAMENTO

A. Personal que fiscalizará su cumplimiento

El personal encargado de hacer cumplir las disposiciones Condiciones Generales Uniformes consiste de los funcionarios de las agencias o instrumentalidades de gobierno contratantes que están a cargo de la contratación, supervisión y sobreseimiento de la construcción de la obra.

B. Sanciones y penalidades

El incumplimiento con las disposiciones del Reglamento de Condiciones Generales Uniformes puede conllevar la imposición de daños líquidos, cancelación de contratos, radicación de demanda por incumplimiento, imposición de multas y cancelación de autorizaciones o licencias.

Las Condiciones Generales Uniformes disponen que en caso de que el contratista o su aseguradora no completen el trabajo dentro del tiempo especificado por el contrato o según extendido se le impondrá al contratista una suma de daños líquidos por cada día calendario que el trabajo no sea completado en tiempo. Los daños líquidos fluctúan desde $300.00 dólares diarios en Contratos de $0 hasta $99,999.99 hasta $8,000.00 diarios en proyectos de $50 Millones en adelante (aunque esto puede variar según la

Provisión Especial que se incluya en el contrato. Por otro lado, las Condiciones Generales Uniformes también disponen de un incentivo equivalente a la mitad de los daños líquidos estipulados por cada día que la obra este sustancialmente completada antes de la fecha de terminación estipulada en el Contrato.

Lo anterior no impide que el Gobierno de Puerto Rico pueda, por los mismos hechos, iniciar un procedimiento criminal contra cualquier contratista que se identifique que ha cometido delitos relacionados con fraude en la construcción o cualquier otro delito tipificado en el Código Penal de Puerto Rico.

C. **Otros requisitos para cumplimiento**

Las Condiciones Generales Uniformes son un conjunto de disposiciones que definen los deberes y derechos del contratista principal y de las agencias en el proceso de contratación y construcción de obras públicas. Estas Condiciones Generales Uniformes también disponen los términos para actuar o presentar reclamaciones. Debido a su carácter regulador las Condiciones Generales Uniformes establecen múltiples requisitos a los contratistas a quienes se les adjudica la construcción de una obra pública y discutirlos todos seria vertir el contenido de las condiciones generales en este escrito. Sin embargo, entendemos que los requisitos más significativos en cuanto al impacto económico del Reglamento en aquellos pocos contratistas principales que cualifican como pequeños comerciantes es el asunto de la obtención de las fianzas y pólizas de seguros requeridas en el Artículo 3 de las Condiciones Generales Uniformes.

La Condiciones Generales Uniformes disponen que el contratista principal que haya recibido la buena pro en una subasta y contraté con el gobierno o agencia para la construcción de una obra pública no podrá comenzar trabajos hasta no haber obtenido ciertas pólizas de seguros y fianzas requeridas en las Condiciones Generales Uniformes. En el caso de las agencias que no tienen un "Owner's Controlled Insurance Program" el contratista principal de la obra deberá, dentro de los diez (10) días de haber recibido la notificación de adjudicación de subasta, proveer lo siguiente: (1) fianza de pago y fianza de cumplimiento en una suma de al menos 50% hasta 100% del monto del contrato; (3) pólizas del Fondo de Seguro de Estado y todas las pólizas de seguros social y laborales necesarias; (4) seguro de responsabilidad general; (5) póliza choferil para negocios; (6) builders risk; (7) instalation floater policy; (8) "contractors liability insurance" con un límite agregado general de $1 Millón, límite agregado de productos o operación de $1,000.00, límite de "advertising and injury", límite por ocurrencia de $5,000,000.00 límite de daños por fuego $50,000.00 límite de gastos médicos de $5,000.00. Estos requisitos son aplicables al contratista general porque su relación contractual es con la agencia pero no al subcontratista o suplidor ya que relación contractual es con el contratista general. A pesar de lo antes expresado al subcontratista le aplican algunas clausulas de las condiciones generales sobre calidad de trabajo, seguridad y otros relacionados al trabajos que contrate.

Otro requisito de impacto económico para aquellos contratistas generales que sean pequeños negocios es que el contratista general vendrá obligado al pago de todos los impuestos incluyendo impuesto de ventas, consumo, uso y otros de carácter similar necesarios para la consecución de de la Obra. Estos impuestos deben pagarse de acuerdo con las leyes, reglamentos y ordenanzas del lugar donde ubique la Obra que sean aplicables durante el periodo en de duración de la Obra y que estuvieran en efecto al momento de la subasta. Estos impuestos incluyen los impuestos municipales. Véase Art. 6.10.

Las pólizas de seguros y fianzas así como los impuestos y otros costos son gastos que el contratista general toma en consideración al momento de someter su propuesta ante la agencia o sea al momento de

licitar. Por tanto, estos gastos se encuentran absorbidos en el precio de licitación que el contratista general somete, a saber, en el Precio del Contrato. Los requisitos para las diferentes fianzas y seguros tienen el propósito de garantizarle a la agencia que el contratista principal será responsable. Estas disposiciones garantizan la ejecución de la obra y la mejor utilización de los fondos públicos que se desembolsan para pagar la Obra.

Por otro lado el impacto que tiene el Reglamento de Condiciones Generales Uniformes en los subcontratistas, materialistas y suplidores no es un impacto de carácter económico sino un impacto de carácter regulatorio ya que algunas disposiciones de las Condiciones Generales Uniformes como las de seguridad y otras que no son las de fianzas se incorporaran a los contratos que estos suscriben con el contratista general.

V. RELACIÓN CON OTROS REGLAMENTOS

Este Reglamento guarda relación con todos los reglamentos relacionados a las subastas, compras y contrataciones en obras de gobierno y con la ley y reglamentación de agencias federales que proveen subsidio a varias obras, este Reglamento deberá contar con la anuencia de esas agencias federales. Por tal razón las agencias que reciben ayuda federal notificarán el reglamento a las agencias federales concernidas y obtendrán su posición en cuanto al mismo.

VI. SEÑALAMIENTOS DEL PROCURADOR DE PEQUEÑOS NEGOCIOS

Los representantes del Departamento de Transportación y Obras Publicas se reunieron con el Procurador de Pequeños Negocios y el personal que analizó las disposiciones del propuesto Reglamento con el propósito de recibir el insumo y recomendación del Procurador y discutir y aclarar dudas sobre las clausulas del Reglamento. Las partes discutimos la sección 3.2.1. y 3.2.2 del propuesto Reglamento. Estas Clausulas en esencia requieren (I) que el contratista principal provea lo siguiente antes de dar comienzo a la obra: (1) fianza de cumplimiento; (2) fianza de pago; (3) póliza de compensación a trabajadores; (4) Fondo de Seguro de Estado y seguro social; (5) Seguro de Responsabilidad General; (6) Póliza de Chóferil; (7) Builders Risk; (8) Installation Floater (cuando sea aplicable); y (ii) que el contratista le conceda a las agencias y al gobierno discreción para eximir o solicitar pólizas o seguros de otra naturaleza a las antes mencionadas, según lo entienda necesario. Luego de analizar las disposiciones del Reglamento sobre este particular y atender las preocupaciones determinamos que la discreción que el Reglamento le concede a la agencia es razonable y necesaria. La clausula que permite se exima de algunas pólizas o seguros o que se requieran pólizas o seguros adicionales (sección 3.2.2) ya había sido previamente considerada y discutida el AGC. Precisamente con el propósito de atender la preocupación de posibles decisiones arbitrarias por parte de las agencias en cuanto a eximir o requerir más seguros se creó la Sección 3.2.2.1. Dicha sección obliga a la agencia a exponer por escrito y hacer formar parte del expediente del Proyecto las razones para no solicitar ciertas pólizas o para solicitar pólizas de diferente naturaleza. El propósito de la clausula 3.2.2 es darle cierto grado de flexibilidad al gobierno y agencias que construyen obras públicas para atender casos que ameriten que en bienestar de la consecución de la obra o para la protección de los fondos públicos haya que hacer modificaciones en las pólizas requeridas o en la naturaleza de las mismas. La flexibilidad que provee esta sección es necesaria toda vez que los proyectos de construcción de obra pública varían en complejidad y naturaleza. A pesar de que en general las pólizas requeridas son las mencionadas en la clausula 3.2.1 existen Proyectos que por su alto riesgo, peligrosidad o tecnicismo pueden requerir una modificación en el tipo de póliza. También existen Proyectos de Obra Pública tan sencillos que solicitar todas las pólizas nombradas en la clausula 3.2.1

resultaría innecesario y oneroso para el contratista lo cual haría la obra más costosa para el gobierno o la agencia. La construcción de obra pública requiere la flexibilidad de pólizas que se ajusten a la obra que se construye. El Reglamento pretende que no se haga más costosa una obra sencilla o que se que al descubierto una obra altamente compleja solo por la rigurosidad de una clausula. En fin el propósito es proteger y asegurar los fondos públicos y lograr la construcción de obras de manera rápida y eficaz pero segura. No empece lo anterior, el propio reglamento limita la flexibilidad de la agencia al tomar esta determinación requiriéndole que si se modifican las pólizas solicitadas en la seccion3.2.1.1 para eximir o aumentar de alguna póliza la agencia presente su justificación por escrito y haga que la misma obre en el expediente.

La segunda recomendación del Procurador de Pequeños Negocios se refiere al grado de control que la agencia o entidad gubernamental contratante tiene sobre la elección de los suplidores, materialistas y/o subcontratistas que se contrataran para el Proyecto. Para atender esta recomendación revisamos las disposiciones de la sección 6.21 del Reglamento y sus subincisos. De la sección antes mencionada surge que el Contratista general del Proyecto u Obra es quien determina cuales serán los subcontratistas, suplidores y materialistas que trabajaran en la Obra. En esa determinación inicial de quienes serán los que trabajaran la agencia no tiene ninguna intervención. Una vez el contratista principal hace su selección, entonces el Reglamento le requiere notificarle a la Agencia un listado de los subcontratistas y suplidores principales que el contratista ha escogido para las porciones principales del Proyecto. Nótese que solo se requieren los subcontratistas y suplidores principales de porciones principales del Proyecto o sea que el contratista no tiene que notificar a la agencia todos los subcontratistas sino solo los principales. La agencia hará una investigación y de tener una objeción justificada y razonable a los suplidores o subcontratistas principales que se le notificaron, entonces, lo expresará por escrito y ese subcontratista no podrá ser contratado para la Obra. Entre las razones que la agencia puede levantar para objetar la contratación de un subcontratista o suplidor se encuentra: (1) que el subcontratista haya incurrido en incumplimientos previos con la agencia; (2) que haya tenido record de violaciones de seguridad; o (3) que tenga historial de desempeño deficiente en sus funciones. Las razones que la agencia exprese para objetar tienen que ser razonables no pueden ser arbitrarias, injustas o ilegales. Esta clausula va dirigida a velar porque se logre la construcción rápida y eficiente de obras y sin exponer a la agencia o gobierno a riesgos innecesarios por subcontratistas riesgosos e ineficientes. Las objeciones de la agencia deberán estar fundamentadas en una investigación y constar por escrito y formar parte del expediente de modo que los derechos de un subcontratista o suplidor que quiera impugnar esta decisión pueda llevar la acción que en derecho estime. Por tanto, de lo anterior surge que la agencia no escoge los subcontratistas o materialistas de un Proyecto sino que si luego de una investigación surge que alguno de los que el contratista general pretende utilizar tiene un historial que puede afectar la obra, la agencia puede rechazarlo por el bienestar de la obra y la protección de los fondos.

VII. CONCLUSION

Luego de este análisis, se puede concluir que el reglamento de las Condiciones Generales Uniformes no tendrá un impacto económico adverso en los pequeños negocios que contraten con las diferentes agencias gubernamentales o corporaciones públicas para la construcción de obras públicas.

B.3 - STANDARD TECHNICAL SPECIFICATIONS

The Table of Contents of the Standard Technical Specifications starts on the next page, followed by the individual sections of the Technical Specifications.

The Standard Technical Specifications include sections covering most of the Standard Works carried out by PRASA. In addition, Supplementary Technical Specifications if applicable may be included in Volume A under the Chapter titled “Supplementary Technical Specificaitons”.

PRASA STANDARD TECHNICAL SPECIFICATIONS

SECTION 007319	HEALTH AND SAFETY REQUIREMENTS
SECTION 010900	ABBREVIATIONS
SECTION 013100	PROGRESS SCHEDULE
SECTION 013340	SHOP DRAWINGS, PRODUCT DATA AND SAMPLES
SECTION 014480	TESTING LABORATORY SERVICES
SECTION 014500	VALUE ENGINEERING INCENTIVE VALUE ENGINEERING CHANGE PROPOSALS
SECTION 015100	PRASA'S FIELD OFFICE
SECTION 015800	PROJECT SIGN
SECTION 016400	MANUFACTURE`S SERVICES
SECTION 016500	FACILITY START-UP
SECTION 017200	SURVEY AND STAKE OUT
SECTION 017400	CLEANING DURING EXECUTION OF WORK
SECTION 017800	OPERATION AND MAINTENANCE MANUAL
SECTION 017805	HAZARD IDENTIFICATION
SECTION 02A015	ROCK EXCAVATION
SECTION 02A030	BLASTING
SECTION 02A050	EXCAVATION, FILL/EMBANKMENT AND BACKFILL
SECTION 02A092	TRENCH EXCAVATION FOR PIPE
SECTION 02A140	GABIONS
SECTION 02B032	PRECAST SECTIONAL CONCRETE PILES
SECTION 02B034	PRESTRESS CONCRETE PILES
SECTION 02B055	PILE CAPS
SECTION 02C025	DEMOLITION AND REPLACEMENT OF PAVEMENT, SIDEWALK, CURB AND GUTTER
SECTION 02C040	BITUMINOUS PAVEMENT FOR ACCESS ROAD AND PAVED AREAS
SECTION 02D005	DEMOLITION (GENERAL)
SECTION 02D011	SITE CLEARING AND GRUBBING
SECTION 02D020	LANDSCAPING & PLANTING
SECTION 02D040	MOBILIZATION AND SITE PREPARATION

SECTION 02D115 CUTTING AND REMOVING EXISTING CONCRETE, MASONRY AND MISCELLANEOUS WORK
SECTION 02D130 DISPOSAL OF UNSUITABLE MATERIAL
SECTION 02D150 CROSSING OF EXISTING STORM SEWER
SECTION 02D160 CROSSING RIVER BEDS
SECTION 02D180 FIRE HYDRANTS
SECTION 02D205 CONCRETE MANHOLES
SECTION 02D215 INTERNAL INSPECTION AND SEALING OF EXISTING SANITARY SEWERS
SECTION 02D250 STEEL FRAME AND COVER
SECTION 02D252 CAST IRON FRAMES AND COVERS
SECTION 02D295 BARBED WIRE FENCE
SECTION 02D300 CHAIN LINK FENCE
SECTION 030540 LEAN CONCRETE
SECTION 032100 CONCRETE REINFORCEMENT
SECTION 033100 CAST-IN-PLACE CONCRETE
SECTION 040612 CEMENT MORTAR
SECTION 040850 MASONRY ACCESSORIES
SECTION 042212 CONCRETE BLOCKS
SECTION 050900 ANCHOR BOLTS, EXPANSION ANCHORS AND CONCRETE INSERTS
SECTION 051206 STRUCTURAL STEEL
SECTION 051240 ALUMINUM FRAMES AND COVERS
SECTION 055155 LADDER & SAFETY CAGE
SECTION 055210 PIPE RAILING
SECTION 055510 SAFETY TREADS FOR CONCRETE STAIRS
SECTION 056010 STEEL TRASH RACK
SECTION 071010 WATERPROOFING OF CONCRETE STRUCTURES BELOW GRADE
SECTION 071220 EPOXY COATING FOR PIPES AND STRUCTURES
SECTION 079212 JOINT SEALERS
SECTION 085105 WINDOWS
SECTION 092210 CEMENT PLASTERING

SECTION 092215 CEMENT FINISHES
SECTION 093110 CERAMIC FLOOR AND WALL TILE
SECTION 093310 QUARRY TILE
SECTION 095100 ACOUSTICAL CEILINGS
SECTION 099100 PAINTING
SECTION 104010 AAA SEAL AND LETTERING
SECTION 104520 DETECTABLE MARKING TAPE
SECTION 105210 PORTABLE FIRE PROTECTION EQUIPMENT
SECTION 108010 TOILET PARTITIONS AND URINAL SCREENS
SECTION 108012 TOILET ROOMS ACCESSORIES
SECTION 116020 EMERGENCY BREATHING EQUIPMENT
SECTION 116030 FIRST AID EQUIPMENT
SECTION 134010 INTEGRATED AUTOMATION REQUIREMENTS
SECTION 144010 LIFTING DEVICE
SECTION 15A020 WALL VENTILATOR
SECTION 15B200 SLUICE GATES
SECTION 15C010 COPPER PIPE
SECTION 15C031 DUCTILE RON PIPE AND FITTINGS (FORCE MAINS)
SECTION 15C040 DUCTILE IRON PIPE (GRAVITY SYSTEM)
SECTION 15C100 POLYVINYL CHLORIDE (PVC) GRAVITY SEWER PIPE AND FITTINGS
SECTION 15C115 PVC WATER (GRAVITY AND PRESSURE) AND SEWER FORCE MAIN PIPE AND FITTINGS
SECTION 15C130 LOW PRESSURE REINFORCED CONCRETE PIPE NON-CYLINDER TYPE WITH RUBBER GASKET AND STEEL JOINTS (GRAVITY)
SECTION 15C150 PRE-STRESSED CONCRETE CYLINDER PIPE WITH RUBBER AND STEEL JOINTS
SECTION 15C155 PRE-STRESSED REINFORCED CONCRETE STEEL CYLINDER PIPE (GRAVITY)
SECTION 15C190 CHEMICAL PIPING AND APPURTENANCES
SECTION 15C240 SEWER PIPE TEST
SECTION 15D090 GALVANIZED STEEL STRAPS
SECTION 15D160 FLANGED COUPLING ADAPTER

SECTION 15E030 P.V.C. SEWER SERVICE CONNECTION
SECTION 15E040 SERVICE CONNECTIONS TO WATER MAINS
SECTION 15E050 CONNECTION TO EXISTING MANHOLES
SECTION 15E070 CONNECTION TO EXISTING WATER MAIN
SECTION 160100 MATTING FOR FLOOR INSULATION
SECTION 160200 LIGHTNING PROTECTION
SECTION 160310 ELECTRICAL CONTROLS AND MISCELLANEOUS ELECTRICAL EQUIPMENT
SECTION 160500 GENERAL ELECTRICAL WORK
SECTION 160610 GROUNDING
SECTION 160810 ELECTRIC FIELD ACCEPTANCE TESTS
SECTION 160910 DEMOLITION OF EXISTING ELECTRICAL EQUIPMENT
SECTION 161210 ELECTRIC WIRES AND CABLES
SECTION 161310 ELECTRICAL RACEWAYS SYSTEMS
SECTION 161312 CONDUIT
SECTION 161315 FLEXIBLE CONDUITS
SECTION 161317 UNDERGROUND DUCT BANKS
SECTION 161320 OUTLET BOXES
SECTION 161330 PULL AND JUNCTION BOXES
SECTION 161410 WIRING DEVICES
SECTION 161420 RECEPTACLES
SECTION 162210 ELECTRIC MOTORS
SECTION 162211 ELECTRIC MOTORS II
SECTION 162220 DIESEL ENGINE GENERATING SET AND APPURTENANCES
SECTION 162320 AUTOMATIC LOAD TRANSFER CONTROL
SECTION 162710 GENERAL PURPOSE DRY-TYPE TRANSFORMERS
SECTION 162720 TRANSCLOSURE
SECTION 164310 DISCONNECT SWITCHES
SECTION 164410 PANELBOARDS
SECTION 165114 INTERIOR LUMINARIES AND LIGHTING

SECTION 007319
HEALTH AND SAFETY REQUIREMENTS

PART 1. GENERAL

1.1 Background

These Health and Safety requirements shall be used by the Contractor to initiate, maintain, enforce and supervise all safety and security precautions and programs in connection with the performance of all occupational safety standards and regulations required by the Occupational Safety and Health Act, other Applicable Laws, the Contract Documents, and any insurance carrier providing insurance coverage for the Owner or the Contractor in connection with the Project.

Every effort will therefore be made to maintain the Project Site free from recognizable hazards. As part of this commitment the Contractor shall, prior to commencement of Construction, prepare a written Construction Safety and Loss Control Plan which shall be submitted to Owner Representative for evaluation and issued to all Subcontractors and all force employed within the Project. It is necessary for the Contractors to implement and enforce their commitment with this Plan throughout the life of the project to prevent injury, illness and accidents as well as designate a Safety Representative to enforce this Program.

1.2 Summary

A. Provide safe and healthful working conditions for each operation at all times. Conduct the various operations connected with the Work so that they will not be injurious to safety or health. Comply will all provisions, regulations and recommendations issued pursuant to the Occupational Safety and Health Act of 1970 and the Puerto Rico Occupational Safety and Health Act Law 16, and with laws, rules, and regulations or other authorities having jurisdiction, with regard to all matters relating the safety and health of workers and the general public. Compliance with government requirements is mandated by law and considered only a minimum level of safety performance. Perform all work in accordance with best safety work practices recognized by the construction industry.

B. Stop work whenever a work procedure or a condition at a work site is deemed unsafe or represent an imminent danger as defined by OSHA.

C. Prior to the start of construction activities in any of the PRASA Infrastructure Projects, the Contractor shall prepare a Job Hazard Analysis. Based on this document; the Contractor will then prepare a Site Specific Safety Plan.

1.3 Safety and Health Management

A. The requirements and personnel are in addition to the requirements in the General Conditions.

B. Definitions: In these Occupational Safety and Health General Specifications and as defined by OSHA:

- Accident is an unplanned or uncontrolled event or sequence of events that result in injury or damage.
- Architect/Engineer is as defined by the General Conditions

- Competent Person is one who is capable of identifying existing and predictable surrounding hazards or working conditions which are unsanitary, hazardous, or dangerous to employees, and who has authorization to take prompt corrective measures to eliminate them.
- Contractor is the person or organization that contracts with the Owner for the performance of the Work described in the Contract Documents. The term Contractor, identified as such in the Agreement, means the Contractor or his authorized representative. As defined by the General Conditions.
- PRASA's Safety Officer is the person or entity designated by the Owner to perform safety audits and provide technical support to the PRASA Infrastructure Office and the Owner's Representative related to the environmental, health and safety field.
- Federal Agencies as defined by the General Conditions.
- Fit Test is the use of a protocol to qualitatively or quantitatively evaluate the fit of a respirator on an individual. (See also Qualitative fit test (QLFT) and Quantitative fit test (QNFT).)
- Imminent Danger is any condition where there is a reasonable certainty of death or serious physical harm if the condition is not corrected.
- Insurance Company "Broker" is the person or organization that ensures that Contractors are enrolled under the OCIP Program and focus in claims made at the projects.
- Job Hazard Analysis is a technique that focuses on job tasks as a way to identify hazards before they occur. It focuses on the relationship between the worker, the task, the tools, and the work environment. Ideally, after you identify uncontrolled hazards, you will take steps to eliminate or reduce them to an acceptable risk level.
- Medical Surveillance is a program established by the employer where a medical evaluation is provided to employees involved in hazardous operations or who wear a respirator for 30 days or more per year.
- Near Miss is any incident that could have resulted in serious injury or death but by good fortune did not developed into an accident causing serious injury or death.
- OCIP see Owner-Controlled Insurance Program. As defined by the General Conditions.
- Occupational Safety and Health Standard is a standard which requires conditions, or the adoption or use of one or more practices, means, methods, operations, or processes, reasonably necessary or appropriate to provide safe or healthful employment and places of employment.

1.4 Submittals

A. Submit a Site Specific Safety Plan to Owner's Representative within 15 calendar days after of Notice to Proceed and prior to start of any construction activities. PRASA's Safety Officer shall approve the Plan prior to the start of any work.

B. Submit Safety Representative Resume and certification within 15 calendar days of employment at the project.

C. Submit weekly or as generated the following:
    a. Weekly Attendance sheets to Safety Toolbox meetings and the Topic Covered
    b. Attendance Sheet to Induction training

D. Submit training evidence to employees and sub-contractors;

E. Submit Incidents or Accidents Investigation Report within 48 hours of the accident occurrence.

F. Submit any OSHA Citation as soon as possible but no later than 24 hours.

G. As required in the General Conditions submit Material Safety Data Sheets or Safety Data Sheets for all substances as received or brought to the project site along with the Hazard Communication Program and chemical inventory list;

H. Submit any permit, certification or inspections as required or needed during the use of generators, cranes, or other equipment.

I. Submit rigging plans; job hazard analysis and work plans for any specific task as required by the Inspection or PRASA's Safety Officer within 48 hours.

1.5 Safety Program Administration

A. Roles and Responsibilities: The Contractor shall be directly responsible for establishing and implementing a project-specific Contractor Safety and Health Program for the protection of its workers, the workers of its Subcontractors, Architect/Engineer, PRASA Personnel and the general public. The Contractor shall ensure that the necessary resources for an effective program, as set forth in the contract documents and specifications, are provided at all times during the course of the Work. The Contractor shall require that its Subcontractors comply with all requirements of the Work and of the Contractor Site Specific Safety Plan.

1. The Contractor's Safety Representative shall:

   a. Ensure the implementation and administration of the Contractor's Site Specific Safety Plan.

   b. Perform and schedule weekly safety and health meetings conducted to employees and subcontractors.

   c. Cooperate with the PRASA's Safety Officer n enforcement of the Safety and Health Program and correct observations made during the inspections.

   d. Generated a report answering the corrective actions attending the PRASA's Safety Officer findings.

   e. Perform notification of any incident or accident and investigate within 24 hours of the event.

   f. Be directly responsible for ensuring the work is performed in a safe and healthful manner. They shall be knowledgeable of the hazards attendant to the work, aware of the necessary hazard controls and authorized to effect prompt action to control or eliminate them.

   g. Ensure that each job has the necessary safety appliances and protective personal equipment.

   h. Be physically at the Project job site on a full-time basis for 8 hours per working day with minimal exceptions.

   i. Conduct physical inspections of the job site, equipment, materials and operation to detect and promptly eliminate unsafe acts and unsafe conditions. The frequency of the inspections shall be determined on the basis of site activities. Hazardous activities will require continuous inspection. In no case shall the above-described inspections be conducted less than once per shift.

   j. Schedule and conduct safety orientations, meetings and hazard recognition training for all workers and visitors on the project as required by PRASA

2. Contractor's employees and Subcontractors shall be required by the Contractor to:

   a. Fully support the Contractor's Safety Representative by assisting in the inspection of the job site, equipment and materials to detect hazards and reporting unsafe acts and unsafe conditions immediately.
   b. Attend and actively participate in all orientation, safety and health training safety meetings and other functions for communication of safety and health prescribed by the Contractor's Site Specific Safety Plan.
   c. Comply with the work rules set forth in the Contractor's Site Specific Safety Plan or as further established as a part of ongoing safety training and/or job hazard analysis.
   d. Report to the Contractor's Safety Representative any and all apparent unsafe acts or unsafe conditions.
   e. Report any and all accidents, injuries, symptoms of illness and near miss events involving the worker to the Contractor's Safety Representative immediately or as promptly as conditions permit.
   f. Make recommendations for safety and health protection(s) that the worker has, from his or her own experience, observed to be successful on other projects.

PART 2. PRODUCTS (NOT USED)

PART 3. EXECUTION

3.1 Contractor's Safety and Health Program – General Requirements

The Contractor shall be fully responsible for initiating, maintaining enforcing and supervising all safety and security precautions and programs in connection with the performance of the Contract, including, but not limited to, compliance by the Contractor, all Subcontractors and Sub-Subcontractors with all occupational safety standards and regulations required by the Occupational Safety and Health Act, other Applicable Laws, the Contract Documents, and any insurance carrier providing insurance coverage for Owner or the Contractor in connection with the Project. Each Contractor shall be held responsible for its own and its subcontractor's compliance with the project safety requirements.

3.2 Job Hazard Assessment

The Contractor or his Safety Representative shall carry out an assessment and job hazards analysis to identify any foreseeable hazard associated with the premises or the task to be performed at the project. This analysis shall identify and assess any risk arising from any hazard identified, eliminate the risk or if is not feasible develop measures to control or minimize the risk. After complete this job hazard analysis a Site Specific Safety Plan shall be develop taking into consideration the hazards and measures to control them identified in the job hazard analysis.

The Contractor shall submit, for evaluation and approval by the PRASA's Safety Officer a copy of a Site Specific Safety Plan as defines in Section 3.3 which shall include the procedures to be followed during the project to achieve compliance with the applicable standards and regulations

based on the job hazard analysis and the in compliance with the OSHA 29 CFR 1926, 1910 and the Puerto Rico Occupational Safety and Health Act requirements.

3.3 Site Specific Safety Plan

The Site Specific Safety Plan shall be developed based on the job hazard analysis carried out by the Contractor and in compliance with the following minimum requirements of a health and safety program:

- The Contractor shall have its own loss control program.
- It shall include preventive measures as well as an accident or incident investigation procedure.
- The Plan shall include contingency procedures that include how to proceed in an emergency situation, during an accident, in case of an atmospheric disturbance, in case of fire.
- It shall include the procedures to be followed during the life of the project to achieve compliance with the applicable standards and regulations needed as determined in the job hazard analysis.
- Copy of all licenses or certifications required, according to the scope of work. For example: pesticide applicator, electrician, spill responder, refrigeration technician, DOT training for hazardous substances, etc.
- Certification of compliance with medical surveillance requirements, according to scope of work. For example: respiratory protection, asbestos, lead, etc.
- Certification of compliance with Fit Test requirements.

Contractors shall be responsible for the implementation of this plan and for providing induction training to all employees and sub-contractors in this plan at the start of their employment.

A. Loss Control Program Guidelines

The purpose of these guidelines is to provide to the Contractor different methods of how to protect property, materials and the all persons on the Site or who may be affected by the Work performed in his project.

As is indicated in the General Conditions in paragraph 6.13.2.2: “All damage, injury, or loss to any property referred to in paragraphs 6.13.1.2 or 6.13.1.3 caused, directly or indirectly, in whole or in part, by Contractor any Subcontractor, Supplier, or any other individual or entity directly or indirectly employed by any of them to perform any of the Work, or anyone for whose acts any of them may be liable, shall be remedied by Contractor (except damage or loss attributable to the fault of Drawings or Specifications or to the acts or omissions of Owner or Architect/Engineer or Architect/Engineer’s Consultant, or anyone employed by any of them, or anyone for whose acts any of them may be liable, and not attributable, directly or indirectly, in whole or in part, to the fault or negligence of Contractor or any Subcontractor, Supplier, or other individual or entity directly or indirectly employed by any of them).”

The following are some techniques and suggestion that the Contractors could include in their plan to comply with the General Conditions. This only represents a guideline and the Contractor will need to determine what procedures will work better for their project.

B. **Property Loss Control:**

- Provide security.
- A fence or gate will be installed to protect the property.
- A visitor log will be maintained to keep a track of any person who enters the project facility.
- Photos or videos of the area and a conditions report of the areas will be kept and updated monthly in case of any damage to the property.

C. **Equipment and Material Loss Control**

- An inventory or materials and equipment accompanied by receipts, quantity and photos of the conditions.
- Photos of the equipment and materials shall be kept in record.
- Designated an area to keep all the materials in storage and keep a storage keeper in the area.
- Designate a storage area and person in charge who keeps a list with the equipment and employee who took it.
- Keep copy of any warranty or purchase receipt at the project office.
- Develop, install or provide, in the storage areas, fire extinguishers, or other fire prevention measures required by applicable codes.
- As required in the General Conditions, complete an inventory list of the chemicals and other hazardous materials currently used at your worksite. Obtain a Material Safety Data Sheet (MSDS) for each substance and train employees on the proper use and disposal of these products and provide a copy as part of the Site Specific Safety Plan.
- Purchase flammable storage cabinets and approved storage containers when flammable liquids are not in use. Train employees to work safely with these chemicals.

D. **Third Persons Loss Control**

- Install warning signs surrounding and at the entrance of the projects letting people know the presence of hazards.
- Provide physical barriers to prevent people from entering the jobsite.
- Take pictures at the end of the day to ensure the conditions that you left the project in case of any claims by third parties.

E. **General Guidelines**

- Assign a person in charge of the loss program
- Create inventory checklist
- Establish a chain of command with telephone numbers and train your employees to understand what the plan is and how it works.
- Establish work plans taking into consideration hazard evaluations and how to prevent them not only the employee exposition but also persons that could be affect by the Contractors' work.
- Keep all documentation at your project office and designate a person who can keep track of this information.

- Know the OCIP Manual and the information needs it in case of a claim.

F. Accident or Incident Investigation Procedure

Accident investigations determine not only what happened, but also how and why. The information gained from these investigations can prevent recurrence of similar or perhaps more disastrous accidents. Contractors are required to report all injuries/illnesses to Owner's Representative, regardless of the severity. The Contractor shall investigate the accident and report within 48 hours of the occurrence. The report shall include what happened, when it happened, why it happened, and who was involved. The report is to indicate conclusions regarding the physical cause of the accident and summarize corrective action to be taken to prevent a recurrence. The Contractor shall attach all statements as exhibits to the accident report.

G. Contingency Plans

Contractors shall develop and implement contingency or emergency procedures that indicate personnel at the project area in charge, phone numbers and responsibilities of each person during an emergency. Also shall posted the following telephone numbers: nearby hospital, police, fire department, PR OSHA phone number, and any other agency who can assist or provide attention in an emergency based on the project necessities.

H. Disciplinary Program

A disciplinary program shall be developed and implement by Contractors in case that employees or Sub-contractors does not follow the safety requirements establish in the Site Specific Safety Plan.

A list of possible disciplinary actions is include as guidelines to Contractors:

Verbal reprimand: An informal discussion of the incorrect behavior should take place as soon as possible after the supervisor has knowledge of the safety misconduct.

Written reprimand: A written safety violation warning is given to the employee with a copy to the supervisor informing of the safety misconduct.

3.4 Safety Representative

The Contractor shall designate a member of the Contractor's organization assigned at the Site, experienced in OSHA construction safety standards by formal training and safety, who shall be present at the Project during days of construction work activities, who shall report directly to the Contractor's Project Manager, and who will have as his primary responsibility, implementation of the Contractor's Site Specific Safety Plan.

The designate safety representative shall have a minimum of 3 years of experience and documented safety education similar to the OSHA 30 hours training for the construction industry. The designated Safety Representative can perform other activities only at the project site or premises and shall have the authority to stop work and implement corrective measures. Neither the Owner nor the project engineer maybe designated as the safety representative.

A. Competent Person

Each Contractor and its Subcontractors shall assure that a qualified "Competent Person" is provided at work locations where required by OSHA. Some OSHA standards that require competent person are: excavation, scaffolds, cranes, demolition, ladders, asbestos, hearing protection, hazardous materials, fall protection or any other standard as defined in the 29 CFR 1926.32(f).

This person shall be present during the construction activities where he/she is been identified as competent person.

3.5 Initial Induction and Training

Contractor shall perform an initial training induction to all employees and sub-contractors where recognized hazards and control measure are discussed and explained to them.

Each employee and sub-contractor shall have the proper training for the job task they are performing including but not limited to confined space, fall protection, powder actuated tools, traffic control, and equipment operating.

Copies of training records and assistance shall be submitted as evidence as part of the Site Specific Safety Plan.

3.6 Personal Protective Equipment

All employees (Contractors, Subcontractors, and Engineers) and visitors working on the job shall have the proper Personal Protective Equipment as indicating in the Sub-part E of the 29 CFR 1926 for the job task they are performing. At the minimum a hard hat, safety glasses, safety vest, working cloth and work boots is necessary.

3.7 Equipment Inspections

Each Contractor and its Subcontractors shall perform brief daily inspections of equipment and tools to be used prior to job commencement.

3.8 Safety Toolbox Topics

Each Contractor and its Subcontractors shall at a minimum conduct a weekly safety meeting with all employees. A written record of the weekly safety meeting must be available where required by PRASA and the Owner's Representative.

3.9 Safety Scoreboard.

Contractor is required to erect and/or maintain a safety Bulletin Board at a prominent location at job sites with data reflecting the overall job safety record on a current basis. This safety scoreboard shall be in place within five (5) calendar days after commencement of Work and shall be placed in an area at the job site conspicuous to all workers. The safety scoreboard shall indicate the number of days on the job and the number of days since a reportable lost-time personal injury or a material or equipment loss of $1,000.00 or greater. It shall contain the poster "Safety and Health Protection on the Job" and other postings required by the Occupational Safety and Health

Office OSHO, Puerto Rico Department of Labor. It shall also contain additional safety literature and posters.

3.10 General Provisions

1. The Contractor shall provide sanitary conveniences for all employees on all parts of the Work and shall take all precautions to insure that no nuisance is committed by his employees on the Work, and to insure the observance of all applicable sanitary regulations and requirements of Engineer.
2. Each Contractor and its Subcontractors shall not require any worker to work in surroundings or under conditions that are unsanitary, hazardous or dangerous to his health or safety. He shall comply with all Federal, Puerto Rico and local laws, rules and regulations concerning construction safety and health standards and shall admit without delay any inspector from such health and safety agencies upon presentation of proper credentials.
3. Contractor shall provide metal cans for the storage of flammable materials at the project site. No DOT plastic container will be accepted in the project area for storage, only for transferring purposes.
4. Contractor shall submit a Rigging Plan for all the lifting to be performed at the project Site. PRASA's Safety Officer will review it and approve before the performance of the work. Additional to the rigging plan the following documents shall be submitted: crane certification, operator's certification, rigger certification, crane specs, load chart, weight of the heaviest piece to be lifted and any other documentation required by the PRASA's Safety Officer.
5. Contractor shall be responsible for coordinating any exchange or material safety data sheets or other hazard communication information required to be made available or exchanged between or among employers at the site in accordance with Laws and Regulations and train employee in the hazard communication standard.
6. Smoking is not permitted anywhere in the project site.
7. Services including the application of chemical products within closed spaces, like buildings, will be offered according to PRASA's conditions. The Contractor will take all steps necessary to assure the area will be free of nuisance odors or vapors before PRASA personnel is to reoccupy. All these will be done in coordination with the local supervisor of PRASA. Services in exterior parts of PRASA can be performed during regular working hours.
8. The Contractor shall assure that all wastes are removed and properly disposed of, in accordance with all applicable laws and regulations, after completion of work.
9. Welding operations will comply with the requirements of OSHA, ANSI and NFPA.
10. If the project involves the handling of non-asbestos insulation or other dust generating materials, like gypsum board, steps shall be taken to prevent the release of the dust in adjacent areas.
11. The Contractor shall erect and maintain, as required by existing conditions and progress of the work, all reasonable safeguards for safety and protection, including posting danger signs and other warnings against hazards, promulgating safety regulations and notifying owners and users of adjacent utilities.
12. Contractor will obtain and maintain, for the duration of the contract, the proper permits from all federal, state and local regulatory authorities or other applicable government agency with respect to discharge, disposal, use, storage, handling and transportation of

hazardous chemicals and substances as and when applicable law or regulation requires. For projects including the handling of asbestos, lead, or spilled hazardous substances, the notification to EPA or the EQB will be done by the Contractor, but in coordination with the Owner's Representative.

13. Contractor will not cause or permit any hazardous chemical or product containing a hazardous chemical to be at, or in the vicinity of, any place where any employee, agent, or contractor of Puerto Rico Aqueduct and Sewer Authority, or any employee of any such agent or Contractor, may be at risk or exposed to hazard as a result thereof during normal use or any foreseeable emergency.
14. Contractor will defend, indemnify and hold harmless, PRASA, its employees, agents or assigns for any and all liabilities and expenses arising out of Contractor noncompliance irrespective of any other terms of this Section.
15. Traffic control devices shall be provided for all roads contemplated to be impacted during the life of the project in compliance with the most recent edition MUTCD.

END OF SECTION

SECTION 010900
ABREVIATIONS

PART 1. GENERAL

1.01 REFERENCE TO STANDARDS AND SPECIFICATIONS OF TECHNICAL SOCIETIES

A. Reference to standards and specifications of technical societies, and reporting and resolving discrepancies associated therewith, shall be as indicated in the General Conditions, as required herein and in the individual Specification sections.

B. As work specified by reference to the published standard or specification of a government agency, technical association, trade association, professional society or institute, testing agency, or other organization shall meet the requirements or surpass the minimum standards of quality for materials and workmanship established by the designated standard or specification.

C. Where so specified, products or workmanship shall also meet or exceed the additional prescriptive or performance requirements included within the Contract Documents to establish a higher or more stringent standard of quality than that required by the referenced standard.

D. Where two or more standards are specified to establish quality, the product and workmanship shall meet or exceed the requirements of the most stringent.

E. Where both a standard and a brand name are specified for a product in the Contract Documents, the proprietary product named shall meet or exceed the requirements of the specified reference standard.

F. Copies of standards and specifications of technical societies:

1. Copies of applicable referenced standards have not been bound in these Contract Documents.

2. Where copies of standards are needed by the Contractor, obtain a copy or copies directly from the publication source and maintain in an orderly manner at the site as Work Site Records, available to the Contractor's Personnel, Subcontractors, Owner and Engineer.

1.02 ABBREVIATIONS

A. The following is a list of construction industry organizations and government agencies with their abbreviation, to which references may be made in the Contract Documents.

1.	AA	Aluminum Association
2.	AABC	Associated Air Balance Council
3.	AAMA	American Architectural Manufacturer's Association
4.	AASHTO	American Association of State Highway and Transportation Officials
5.	ACI	American Concrete Institute

6.	AFBMA	Anti-Friction Bearing Manufacturer's Association
7.	AGA	American Gas Association
8.	AGMA	American Gear Manufacturer's Association
9.	AI	Asphalt Institute
10.	AISC	American Institute of Steel Construction
11.	AISI	American Iron and Steel Institute
12.	AITC	American Institute of Timber Construction
13.	ALS	American Lumber Standards
14.	AMA	Acoustical Materials Association
15.	AMCA	Air Movement and Control Association
16.	ANSI	American National Standards Institute
17.	APA	American Plywood Association
18.	API	American Petroleum Institute
19.	APWA	American Public Works Association
20.	AREA	American Railway Engineering Association
21.	ARI	Air Conditioning and Refrigeration Institute
22.	ASA	American Standards Association
23.	ASAE	American Society of Agricultural Engineers
24.	ASCE	American Society of Civil Engineers
25.	ASHRAE	American Society of Heating, Refrigerating and Air-Conditioning Engineers, Inc.
26.	ASNT	American Society for Nondestructive Testing
27.	ASME	American Society of Mechanical Engineers
28.	ASTM	American Society for Testing and Materials
29.	AWI	Architectural Woodwork Institute
30.	AWPA	American Wood Preserver's Association

31.	AWPB	American Wood Preservers Bureau
32.	AWPI	American Wood Preserver's Institute
33.	AWS	American Welding Society
34.	AWWA	American Water Works Association
35.	BHMA	Builders Hardware Manufacturer's Association
36.	CBMA	Certified Ballast Manufacturer's Association
37.	CDA	Copper Development Association
38.	CGA	Compressed Gas Association
39.	CIPRI	Cast Iron Pipe Research Institute
40.	CISPI	Cast Iron Soil Pipe Institute
41.	CMAA	Crane Manufacturer's Association of America
42.	CRSI	Concrete Reinforcing Steel Institute
43.	CS	Commercial Standard
44.	CSA	Canadian Standards Association
45.	CSI	Construction Specifications Institute
46.	CTSS	Caltrans Standard Specification
47.	EJCDC	Engineers Joint Contract Documents Committee
48.	ETL	Engineering Test Laboratories
49.	FCC	Federal Communications Commission
50.	FAA	Federal Aviation Administration
51.	FEMA	Federal Emergency Management Agency
52.	FGMA	Flat Glass Marketing Association
53.	FM	Factory Mutual
54.	Fed. Spec.	Federal Specifications
55.	FS	Federal Specification

56.	GA	Gypsum Association
57.	HI	Hydraulic Institute
58.	HMI	Hoist Manufacturers Institute
59.	ICBO	International Conference of Building Officials
60.	ICEA	Insulated Cable Engineer’s Association
61.	IEEE	Institute of Electrical and Electronics Engineers Inc.
62.	IES	Illuminating Engineering Society
63.	IFI	Industrial Fasteners Institute
64.	ISA	Instrument Society of America
65.	ISO	Insurance Service Office
66.	JIC	Joint Industry Conferences of Hydraulic Manufacturers
67.	MIA	Marble Institute of America
68.	Mil. Sp.	Military Specification or MIL
69.	IVIS	Military Specifications
70.	MMA	Monorail Manufacturer’s Association
71.	NAAMM	National Association of Architectural Metal Manufacturers
72.	NACE	National Association of Corrosion Engineers
73.	NBHA	National Builder’s Hardware Association
74.	NEBB	National Environmental Balancing Bureau
75.	NEC	National Electrical Code
76.	NECA	National Electrical Contractor’s Association
77.	NEMA	National Electrical Manufacturer’s Association
78.	NESC	National Electric Safety Code
79.	NFPA	National Fire Protection Association
80.	NHLA	National Hardwood Lumber Association

81.	NHPMA	Northern Hardwood and Pine Manufacturer's Association
82.	NLMA	National Lumber Manufacturer's Association
83.	NRCA	National Roofing Contractor's Association
84.	NSF	National Sanitation Foundation Testing Laboratory
85.	NSPE	National Society of Professional Engineers
86.	NTMA	National Terrazzo and Mosaic Association
87.	NWWDA	National Wood Window and Door Association
88.	OECI	Overhead Electrical Crane Institute
89.	OSHA	Occupational Safety and Health Act (both Federal and State)
90.	PCI	Prestressed Concrete Institute
91.	PEI	Porcelain Enamel Institute
92.	PPI	Plastic Pipe Institute
93.	PS	Product Standards Section-U.S. Department of Commerce
94.	RMA	Rubber Manufacturer's Association
95.	SAE	Society of Automotive Engineers
96.	SCPRF	Structural Clay Products Research Foundation
97.	SDI	Steel Deck Institute
98.	SDI	Steel Door Institute
99.	SIGMA	Sealed Insulating Glass Manufacturing Association
100.	SJI	Steel Joist Institute
101.	SMACNA	Sheet Metal and Air Conditioning Contractors National Association
102.	SPI	Society of the Plastic Industry
103.	SSPC	Steel Structure Painting Council
104.	SWI	Steel Window Institute
105.	TEMA	Tubular Exchanger Manufacturer's Association

106.	TCA	Tile Council of America
107.	UBC	Uniform Building Code
108.	UFC	Uniform Fire Code
109.	UL	Underwriters Laboratories Inc.
110.	UMC	Uniform Mechanical Code
111.	US	U.S. Bureau of Standards
112.	USBR	U.S. Bureau of Reclamation
113.	WCLIB	West Coast Lumber Inspection Bureau
114.	WWPA	Western Wood Products Association

PART 2. PRODUCTS

//NOT USED//

PART 3. EXECUTION

//NOT USED//

SECTION 013100
PROGRESS SCHEDULES

PART 1 GENERAL

1.1 SCOPE

A. This section specifies the procedure to create, submit, and update the Project Progress Schedules.

1.2 RELATED SECTIONS

A. The General Conditions contain the requirements for the Project Schedule.
B. The following items contain additional Project Schedule requirements.

1.3 DEFINITIONS

1. Progress Schedule: Progress schedule as defined in the General Conditions.

1.4 SUBMITTALS

A. Progress Schedules Baseline submittal:

1. Submit preliminary Progress Schedule within 30 days after the effective date of the Notice to Proceed and Scheduler references within 10 days after the effective date of the Notice to Proceed.
2. Owner's Representative shall review the preliminary schedule and provide an approval or a request for revision within 14 days.
3. Contractor shall have an additional ten (10) to make corrections and adjustments.
4. The preliminary Progress Schedule shall be submitted to Owner's Representative review no later than the first Application for Payment. Under no circumstance, the third progress payment will be paid to Contractor until acceptable schedule is submitted to Owner's Representative.
5. Once the Owner accepts the preliminary Progress Schedule, it will become the Project Baseline Schedule.

B. Progress Schedules Updates:

1. At least once each month, the Contractor shall submit for review an updated schedule showing the progress of the Work to date and anticipated activities to be worked on.
2. No change to the Baseline Schedule, sequences or original duration will be allowed, unless previously submitted and accepted by the Owner's Representative.

C. Submit with Each Progress Schedule Submission:

1. Contractor's written certification that submitted Progress Schedule represent a practical plan to complete the Work within the Contract Time, and convey the Contractor's intent as to the manner of prosecuting the progress of the Work.
2. Narrative: Submittal shall include a narrative describing the intended project sequence, including the coordination with Owner's operation sequences, if any. Any deviation with the Owner's operation sequence shall be noted and explained for Owner's Representative review.
3. Three legible copies and a digital version in the selected program format shall accompany submittal.

D. Contractor's Scheduler

1. The Contractor shall employ or retain the services of a Construction Scheduler, which shall have at least five (5) years of verifiable experience as the person primarily responsible for preparing and maintaining detailed CPM schedules on projects of similar size and nature as the Work. The Scheduler shall attend all meetings pertaining to the scheduling and progress of the Work and any other meetings as. Contractor shall submit the following information:

   a. Identification, qualifications, and experience of the proposed Contractor's Scheduler and all other members of the Contractor's scheduling staff; and
   b. Verifiable references of not less than two (2) previous projects on which the Contractor's Scheduler has utilized CPM scheduling.
2. Owner's Representative reserves the right to reject any identified or proposed candidate for the Construction Scheduler and to require the Contractor to select another candidate acceptable to Owner's Representative.

1.5 PROGRESS SCHEDULE BASELINE- CRITICAL PATH NETWORK (CPM)

A. General: Comprehensive computer-generated schedule using CPM, as outlined in Associated General Contractors of America (AGC) Publication No. 1107.1, "Construction Planning and Scheduling, latest edition. If a conflict occurs between the AGC publication and this specification, this specification shall govern.

B. Work Breakdown Structure (WBS)
1. Contractor shall submit its Baseline Schedule following the WBS provided by the Owner's Representative. If not provided, as a minimum, the WBS shall be broken down into the following levels:
   a. WBS Level 1 - Project
   b. WBS Level 2 - Project phases or stages (if applies). Work breakdown into major phases of Work

c. WBS Level 3 - Project major activities or Work areas
d. WBS Level 4 - Disciplines

2. The WBS shall include at least those major activities described in the scope of work provided by Contract Documents and relevant activities of the Project.

C. Contents:

1. Baseline Schedule shall reflect the Contract Time. Beginning with the date of Notice to Proceed, show Substantial Completion date and conclude with the date of Final Acceptance.
2. Clearly show the durations, interdependence and sequences of Project-related activities reasonably required for the completion of the Work, reflecting the means and methods chosen by Contractor, and if required, Owner's operation sequence requirements.
3. Activities duration shall be expressed in whole working days.
4. Identify Work of separate stages and other logically grouped activities. Shall clearly identify the critical path of the Project.
5. Include as applicable, at a minimum, the following activities:
   a. Permits and endorsement transmittal and obtaining dates pertaining Owner or Contractor.
   b. Submittals and the Owner's Representative review of submittals, including, but not limited, to those items with long lead procurement, fabrication, and delivery time. These activities shall be linked to those pertaining Work activities.
   c. Mobilization and other preliminary activities.
   d. Specified Work sequences, constraints, and Milestones, if any, specified in Contract Documents.
   e. Major equipment design, fabrication, factory testing, and delivery dates.
   f. Delivery dates for Owner-furnished products.
   g. Activities that require coordination with the Owner or any other third party. These shall expressively show lead-time for notifications required by Contract Documents.
   h. Interfaces with Owner-furnished equipment.
   i. Other important Work for each major facility.
   j. Equipment and system startup and test activities.
   k. Punch list, Project closeout, and cleanup activities.
   l. Demobilization.

6. No activity duration, exclusive of those for Submittals review and product fabrication/delivery, shall be less than 1 day nor more than 30 days, unless otherwise accepted.
7. Activity duration for Submittal review shall not be less than review time specified unless clearly identified and prior written acceptance has been obtained from Owner's Representative.
8. Calendar should be in working days and regular working hours unless

otherwise provided in Contract Documents.

a. Working days shall exclude Saturdays, Sundays, and legal Holidays, unless otherwise specified in Contract Documents.

D. Schedule Report with Network Graphical Display:

1. Plot or print on paper 11 inches by 17 inches or 8-1/2 inches by 14 inches, unless otherwise accepted.
2. Title Block: Show name of Project, Owner, date submitted, revision or update number, and the name of the scheduler. Updated schedules shall indicate data date.
3. Identify horizontally across the top of the schedule the period by year, month, and week.
4. Identify each activity with a unique number and a brief description of the Work associated with that activity.
5. Indicate the critical path.
6. Show graphically, at a minimum, the controlling relationships between activities.
7. Plot activities on a time-scale basis, with the length of each activity, proportional to the current estimate of the duration.
8. Plot activities on an early start basis unless otherwise requested by Owner's Representative.
9. Provide a legend to describe standard and special symbols used.
10. List information for each activity in a tabular format, including, at a minimum:
    a. Activity Identification Number
    b. Activity Description
    c. Original Duration
    d. Actual Duration
    e. Remaining Duration
    f. Early Start Date (Actual start on Updated Progress Schedules)
    g. Early Finish Date (Actual finish on Updated Progress Schedules)
    h. Late Start Date
    i. Late Finish Date
    j. Percent of Complete
    k. Total Float
11. Sort reports, in ascending order, as listed below:
    a. Early-start

1.6 PROGRESS OF THE WORK

A. Updated Progress Schedule shall reflect:

1. Progress of Work to within 5 working days prior to submission.
2. Accepted Schedule logic, sequences, activities and durations will not be permitted unless one of the following occurs:
    a. An approved Change Order with impact is incorporated to the Contract.
    b. The Owner must approve the recovery plan presented by the

Contractor.

c. Contractor's intent for adjustments or modifications to sequences or activities duration of Work shall be submitted for Owner's Representative review. Only after the acceptance of the Owner's Representative, such revision will be incorporated to the Progress Schedule.

d. Activities or any issue pertaining to a Contractor's claim that involves a request to change the Contract Time, shall not be included in the updated Progress Schedule, unless such claim has been incorporated to the Contract as permitted in the Contract Documents.

B. Produce detailed subschedules during the Project, upon request of Owner's Representative, to define critical portions of the Work, such as facility shutdowns.

C. If the Contractor is at fault for falling thirty (30) working days or more behind the accepted schedule or ten percent (10%) of Contract Time, whichever is less, the Contractor shall submit a revised schedule (recovery plan) to complete the Work within the Contract Time. Any additional costs caused by the modified schedule will be at Contractor's expense.

D. Owner may order Contractor to present a recovery plan if Contractor fails to:

1. Complete a Milestone activity by its completion date, at no additional cost to the Owner.
2. Satisfactorily executes Work as necessary to prevent delay to the overall completion of Project, at no additional cost to the Owner.

1.7 NARRATIVE PROGRESS REPORT

A. Format:

1. Organize the same as the Progress Schedule.
2. Identify in a cover letter, the reporting period, the date submitted, project, contract, Owner's project number and the name of the author of the report.

B. Contents:

1. Number of days worked during the period, workforce and construction equipment on hand.
2. General progress of the Work, including a list of activities started and completed over the reporting period, mobilization/demobilization of subcontractors, and major milestones achieved.
3. Documentation of weather conditions during the reporting period and any resulting impacts to the work.
4. Description of actual or potential delays, including related causes and the steps taken or anticipated to mitigate their impacts. This document shall not be considered a formal Contractor's Claim. Such Claim notification

shall be presented as required by the General Conditions of the Contract Document.

5. Changes to activity logic for Owner's Representative review and approval, prior to incorporation into the Schedule.
6. Changes to the critical path for Owner's Representative review and acceptance prior to incorporation into the Schedule.
7. Identification of, and accompanying reason for, any activities added or deleted since the last report for Owner's Representative review and acceptance.
8. Steps taken to recover the schedule from Contractor-caused delays.

1.8 SCHEDULE ACCEPTANCE

A. BASELINE SCHEDULE

1. Owner's Representative Project Schedule acceptance shall be in conformance with the requirements of the Contract Documents and shall be based on considerations such as, but not limited to, the following:

    a. Notice to Proceed, Substantial Completion, Final Acceptance and all intermediate Milestones within the Contract Time.
    b. Specified Work sequences and constraints as specified.
    c. Complete Scope of Work is included.
    d. Specified Owner furnished equipment or material, arrival dates, or range of dates, are included.
    e. Access restrictions must be accurately reflected**.**
    f. Start-up and testing times are as specified.
    g. Training time is as specified.
    h. Level of detail is as specified herein.
    i. Submittal submission and review times are as specified.
    j. Durations of Activities are reasonable.
    k. Sequencing is reasonable and does not include preferential logic contrary to the contingency/float sharing clauses of this Specification.
    l. Meets all administrative requirements of Contract Documents.
2. Critical path activities are those activities with a total float equal to or less than zero. The Owner's Representative may considered impractical Schedules with negative total float.
3. A schedule showing Work to be complete in less than the completion time specified, shall be considered as having a float, if accepted by the Owner's Representative. The float shall be the time between the scheduled completion of the Work and the Contract completion date. Float time shall not be for the exclusive benefit of either the Owner or the Contractor. Float shall be a resource available to both parties.
    a. Pursuant to the Float Time sharing provisions of this Specification, no time extensions will be granted, nor will delay damages be paid until a delay occurs which (i) consumes all available contingency time, and (ii) extends Work beyond the Contract Completion date**.**

B. UPDATED SCHEDULE

1. Owner's Representative Project Schedule Update acceptance shall be in conformance with the requirements of the Contract Documents and shall be based on considerations such as, but not limited to, the following:

    a. Updated schedules reflect actual dates and durations of the Work performed.
    b. Revisions incorporated to the Schedules are in conformance to the Change of Contract Time provisions in the General Conditions or otherwise allowed in the same.
2. Updated Schedule shall be included as a supporting document for the corresponding period to the Application for Payment.
3. Only when specified in the General Conditions, if according to the critical path of the originally accepted Project Schedule, any party that generates a float in said critical path then said float shall belong exclusively to the party generating said float. If not specified, then the Float time shall not be for the exclusive benefit of either the Owner or the Contractor. Float shall be a resource available to both parties.

1.9 ADJUSTMENT OF CONTRACT TIMES

A. Reference Owner's General Conditions on Change to Contract Time.

B. Evaluation and reconciliation of Changes of Contract Times shall be based on the Updated Progress Schedule at the time of the proposed adjustment or claimed delay.

C. Claims Based on Contract Times:

1. Any Claim by the Contractor shall be supported by a time impact analysis showing the impact in the critical path of the Schedule. Such analysis shall include, but no limited to, the following.
    a. Updated Schedule prior to the event start date excluding the impact activity.
    b. Same updated Schedule showing the claim event's start date, event end date and its relation to Critical Path activities.
    c. The difference of the above mentioned schedules (actual vs. actual impacted) will be the net impact in the Contract Time due to the evaluated event.
    d. In cases in which the event duration extends beyond the schedule update period, the above described procedure will be repeated until the period in which the event is completed. The net impact on the Contract Time will be the net sum of those differences in which the event occurs as a critical activity.
2. If the Contractor doesn't comply with time requirement for Project Schedule Baseline submittal, this action shall be considered as not

providing the adequate tool to monitor the project progress or any impact. The Owner's Representative may reserve the right to evaluate the time extensions for any period in which the project lacks an acceptable schedule.

END OF SECTION

SECTION 013340
SHOP DRAWINGS, PRODUCT DATA AND SAMPLES

PART 1. GENERAL

1.01 SUMMARY

1.01.1 SECTION INCLUDES

A. Submittal of Shop Drawings, Product Data and Samples required by the Contract Documents.

1.02 RELATED SECTIONS

A. All applicable sections of the specifications.

B. Conditions of the Contract.

C. Designate in the construction schedule, or in a separate coordinated schedule, the dates for submission and the dates that reviewed Shop Drawings, Product Data and Samples will be needed.

1.03 SUBMITTALS

1.03.1 SHOP DRAWINGS

A. Drawings shall be presented in a clear and thorough manner.

1. Details shall be identified by reference to sheet, detail, and schedule numbers shown on Contract Drawings.

1.03.2 PRODUCT DATA

A. Preparation.

1. Clearly mark each copy to identify pertinent products or models.

2. Show performance characteristics and capacities.

3. Show dimensions and clearances required.

4. Show wiring or piping diagrams and controls.

B. Manufacturer's standard schematic drawings and diagrams.

1. Modify drawings and diagrams to delete information, which is not applicable to the work.

2. Supplement standard information to provide information specifically applicable to the work.

1.03.3 SAMPLES

A. Office samples shall be of sufficient size and quantity to clearly illustrate.

1. Functional characteristics of the product, with integrally related parts and attachment devices.

2. Full range of color, texture and pattern.

1.03.4 SUBMISSION REQUIREMENTS

A. Make submittals promptly in accordance with approved schedule, and in such sequence as to cause no delay in the work or in the work of any other contractor.

B. Number of submittals required:

1. Shop Drawings: Submit one reproducible transparency and one opaque reproduction to the Owner's Representative.

2. Product Data: Submit the number of copies, which the Contractor requires, plus six which will be retained by the Owner's Representative.

3. Samples: Submit the number stated in each specification section.

C. Submittals shall contain:

1. The date of submission and the dates of any previous submissions.

2. The Project title and Parcel number.

3. Contract identification.

4. The names of:

a) Contractor

b) Supplier

c) Manufacturer

5. Identification of the product, with the specification section number.

6. Field dimensions, clearly identified as such.

7. Relation to adjacent or critical features of the work or materials.

8. Applicable standards, such as ASTM or Federal Specification numbers.

9. Identification of deviations from Contract Documents.

10. Identification of revisions on re-submittals.

11. An 8" x 3" blank space for Contractor and Owner's Representative's stamps.

12. Contractor's stamp, initialed or signed, certifying to review of submittal, verification of products, field measurements and field construction criteria, and coordination of the information within the submittal with requirements of the work and of Contract Documents.

1.03.5 RESUBMISSION REQUIREMENTS

A. Make any corrections or changes in the submittals required by Owner's Representative and resubmit until approved.

B. Shop Drawings and Product Data:

1. Revise initial drawings or data, and resubmit as specified for the initial submittal.

2. Indicate any changes, which have been made other than those, requested by the Owner's Representative.

C. Samples: Submit new samples as required for initial submittal.

1.03.6 DISTRIBUTION

A. Distribute reproduction of Shop Drawings and copies of Product Data which carry the Owner's Representative's stamp of approval to:

1. Job site file.

2. Record Documents file.

3. Other affected contractors.

4. Subcontractors.

5. Supplier or Fabricator.

B. Distribute samples which carry the Owner's Representative's stamp of approval as directed by the Owner's Representative.

1.03.7 OWNER'S REPRESENTATIVE DUTIES

A. Review submittals with reasonable promptness and in accord with schedule.

B. Affix stamp and initials or signature, and indicate requirements for re-submittal, or approval of submittal.

C. Return submittals to Contractor for distribution, or for resubmission.

PART 2. <u>PRODUCTS</u>

"Not Applicable"

PART 3. EXECUTION

Contractor shall:

A. Review Shop Drawings, Product Data and Samples prior to submission.

B. Determine and verify:

1. Field measurements.

2. Field construction criteria.

3. Catalog numbers and similar data.

4. Conformance with specifications.

C. Coordinate each submittal with requirements of the work and of the Contract Documents.

D. Notify the Owner's Representative in writing, at time of submission, of any deviations in the submittals from requirements of the Contract Documents.

E. Begin no fabrication or work which requires submittals until return of submittals with Owner's Representative's approval.

SECTION 014480
TESTING LABORATORY SERVICES

PART 1. GENERAL

1.01 SUMMARY

1.01.1 SECTION INCLUDES

A. This section includes general requirements on the testing laboratory service that should be provided by Contractor. More specific requirements are included with the specific sections.

1.01.2 RELATED SECTIONS

A. The General Conditions contain additon requirements for inspections, testing, and approvals required by public authorities and others.

B. The individual sections contain additional testing laboratory requirements.

1.02 REFERENCES

A. ANSI/ASTM D3740. Practice for Evaluation of Agencies Engaged in Testing and/or Inspection of Soil and Rock as Used in Engineering Design and Construction.

B. ANSI/ASTM E329. Recommended Practice for Inspection and Testing Agencies for Concrete, Steel, and Bituminous Materials as Used in Construction.

1.03 QUALITY ASSURANCE

A. Comply with requirements of ANSI/ASTM E329.

B. Laboratory. Authorized to operate in Puerto Rico.

C. Laboratory Staff. Maintain a full time registered Engineer on staff to review services.

D. Testing Equipment. Calibrated at reasonable intervals with devices of accuracy traceable to the National Institute of Building Sciences Standards (use to be the National Bureau of Standards NBS).

1.04 SUBMITTALS

A. Prior to start of Work, submit testing laboratory name, address, and telephone number, and names of full time registered Engineer and responsible officer.

B. Submit copy of report of laboratory facilities inspection made by Materials Reference Laboratory of National Bureau of Standards (NBS) during most recent tour of inspection, with memorandum of remedies of any deficiencies reported by the inspection.

PART 2. PRODUCTS

"Not Applicable "

PART 3. EXECUTION

3.01 LABORATORY RESPONSIBILITIES

A. Test samples of mixes submitted by Contractor.

B. Provide qualified personnel at site. Cooperate with Engineer and Contractor in performance of services.

C. Perform specified inspection, sampling, and testing of Products in accordance with specified standards.

D. Ascertain compliance of materials and mixes with requirements of Contract Documents.

E. Promptly notify Engineer and Contractor of observed irregularities or non-conformance of Work or Products.

F. Perform additional inspections and tests required by Engineer.

G. Attend pre construction conferences and progress meetings.

3.02 LABORATORY REPORTS

A. After each inspection and test, promptly submit two copies of laboratory report to Engineer, and to Contractor.

B. Include:

1. Date issued.

2. Project title and number.

3. Name of inspector.

4. Date and time of sampling or inspection.

5. Identification of product and Specifications section.

6. Location in the Project.

7. Type of inspection or test.

8. Date of test.

9. Results of tests.

10. Conformance with Contract Documents.

C. When requested by Engineer, provide interpretation of test results.

3.03 LIMITS ON TESTING LABORATORY AUTHORITY

A. Laboratory may not release, revoke, alter, or enlarge on requirements of Contract Documents.

B. Laboratory may not approve or accept any portion of the Work.

C. Laboratory may not assume any duties of Contractor.

D. Laboratory has no authority to stop the Work.

3.04 CONTRACTOR RESPONSIBILITIES

A. Unless otherwise required by Engineer, Contractor shall obtain samples to be tested following specified procedure, under de supervision of Engineer or his autorized representative.

B. Furnish services of a separate qualified testing laboratory and pay for all samples and tests required for the execution of the Work.

C. Pay for additional samples, in addition to the ones specified, required by Engineer due to non compliance with requirement of the Work or due to doubt about the compliance with the requirements of the Work.

D. Personnel to obtain samples from the field shall be qualified and approved by Engineer. Samples shall be obtained under the presence of the Engineer or his authorized representative.

E. Deliver to laboratory at designated location, adequate samples of materials proposed to be used which require testing, along with proposed mix designs.

F. Cooperate with laboratory personnel, and provide access to the Work.

G. Provide incidental labor and facilities to provide access to Work to be tested, to obtain and handle samples at the site or at source of Products to be tested, to facilitate tests and inspections, storage and curing of test samples.

H. Notify Engineer and laboratory 24 hours prior to expected time for operations requiring inspection and testing services.

SECTION 014500
VALUE ENGINEERING INCENTIVE
VALUE ENGINEERING CHANGE PROPOSALS

PART 1. GENERAL

1.01 SUMMARY

1.01.1 SECTION INCLUDES

A. This section includes the Contractor's submittal of Value Engineering Change Proposals ("VECP") for changes that the Contractor believes will result in instant contract savings of at least $25,000. VECPs will only be considered if the proposed change:

a) Will result in a net reduction in the Contract Price.

b) Will not impair any essential form, fit, function or characteristic of the Work, such as but not limited to, safety, service life, reliability, economy of operation, ease of maintenance, aesthetics and necessary standard features.

c) Will not require an extension of the Contract Time.

B. Proposals to alter temporary facilities to be used for construction purposes or methods of construction suggested in the Contract Documents without significant change to the completed Work are not candidates for a VECP. Items indicated as alternatives in the Contract Documents also are not VECP candidates. A VECP shall not increase the risk to cost or schedule of completion.

C. A VECP will be accepted and implemented by Change Order in accordance with this Article.

1.02 DEFINITIONS

A. "Collateral Costs," as used herein, means Authority costs of operation, maintenance, logistics support, or any property furnished by PRASA.

B. "Collateral savings," as used herein, means those measurable net reductions resulting from a VECP in the Authority's overall projected collateral costs, exclusive of acquisition savings, whether or not the acquisition costs changes.

C. "Contractor's development costs," as used herein, means those costs the Contractor incurs on a VECP specifically in developing, testing, preparing and submitting the VECP. Contractor's development costs will not be recoverable. If the VECP is adopted, the Contractor's share of the savings as hereinafter defined shall be considered full compensation to the Contractor for the VECP.

D. "Implementation costs," as used herein, means those costs the Contractor incurs to make the contractual changes required by Authority acceptance of the VECP. Such costs will be subject to Authority audit.

E. "Authority costs," as used herein, means those costs the Authority incurs that result directly from developing and implementing the VECP, such as but not limited to, any net increases in the cost of engineering, testing, operations, maintenance and logistic support. The term also includes the administrative costs of review and processing the VECP.

F. "Instant contract savings" as used herein, means the reduction in Contractor cost of performance (which includes overhead and profit attributable to the reduced or eliminated work) resulting from acceptance of the VECP, minus implementation costs and Authority costs.

PART 2. PRODUCTS AND EXECUTION

2.01 PREPARATION

A. As a minimum, the Contractor shall include in each VECP the information described in subparagraphs (1) through (11) below:

1. A description of the difference between the existing contract requirement and that proposed, the comparative advantages and disadvantages of each, a justification when an item's function or characteristics are being altered, and the effect of the change on the end item's performance.

2. A list and analysis of the contract requirements that must be changed if the VECP is accepted, including a recommendation as to how the revisions must be made.

3. A separate, detailed cost estimated for: (i) the affected portions of the existing contract requirement and (ii) the VECP. The cost estimate shall include, without limitation, both capital cost savings and life cycle cost savings. The cost reduction associated with the VECP shall take into account the Contractor’s implementation costs.

4. A description and estimate of costs the Authority may incur in implementing the VECP, such as test and evaluation and operating and support costs.

5. A prediction of any effects the proposed change would have on collateral costs to the agency.

6. A statement of the time by which a Change Order accepting the VECP must be issued in order to achieve the maximum cost reduction, noting any affect on the Contract Time, achievement of any milestones, or delivery schedule.

7. Identification of any previous submissions of the VECP, including the dates submitted, the agencies and contract numbers involved, and previous agency actions, (including those of the Authority), if known.

8. All specifications, instructions, plans and drawings detailing the implementation of the VECP. All Construction Drawings must be stamped by a professional engineer registered in the Commonwealth of Puerto Rico.

9. A revised Schedule of Values.

10. A revised schedule for the affected portion(s) of the Work.

11. Any other information required in the judgement of the Authority to review and/or implement the VECP. The Contractor shall provide such information as soon as practicable after the Authority's request therefore.

2.02 PROCESSING PROCEDURES

A. Two copies of each VECP shall be submitted to PRASA. VECPs will be processed expeditiously, however, the Authority will not be liable for any delay in acting upon or for failure to act upon, any VECP submitted pursuant to this Article. The Contractor may withdraw, in whole or in part, a VECP not accepted by the Authority within the period specified in the VECP.

B. The Authority shall be the sole judge of the acceptability of a VECP and of the savings and costs from the adoption of all or any part of such proposal. In determining the savings, the right is reserved to disregard the Contract bid prices if, in the judgement of the Authority, such prices do not represent a fair measure of the value of work to be performed or to be deleted. The decision of the Authority regarding acceptability or unacceptability of the VECP, as well as the savings and costs, shall be final.

C. The Authority may require the Contractor to modify a VECP to make it acceptable. If any modification increases or decreases the savings resulting from the VECP, the Contractor's fair share will be determined upon the basis of the VECP as modified.

D. The Authority may accept, in whole, or part, a VECP submitted pursuant to this Article by issuing a Change Order. However, pending issuance of a Change Order, the Contractor shall remain obligated to perform in accordance with the terms of the Contract.

2.03 SHARING ARRANGEMENTS

A. The Contractor and Authority shall each receive a 50% share in the Instant contract savings. Upon acceptance of a VECP a Change Order will be issued reducing the Contract Price by 50% of the Instant Contract Savings.

2.04 DATA REGULATION

A. To the extent permitted or allowed by law, the Authority will not disclose, use or duplicate any data provided by the Contractor pursuant to this Article, while such VECP is being evaluated. This restriction shall not apply to any information if it is or has been obtained, or is otherwise available from the Contractor or from any other source, without limitation. If a VECP has been accepted the Authority shall have the right to duplicate, use and disclose any data in any manner, and for any, purpose, and have other do so, under this, or any other Authority contract.

SECTION 015100
PRASA'S FIELD
OFFICE

PART 1. GENERAL

The Contractor shall construct, lease or rent, a field office for the exclusive use of the PRASA, at a location near the site of the work acceptable to the PRASA. A typical plan for the field office is included in the paragraph labeled C. Typical Plan for Field Office.

PART 2. PRODUCTS AND EXECUTION

A. Work to be Done or Provided. The building shall have an equivalent floor area of 28 ft. x 16 ft. with a minimum ceiling height of 8 feet and shall have no less than eight (8) windows and one (1) door. A trailer of equivalent area may be accepted as the PRASA's Field Office. A conference table 4 feet wide by 8 feet long with eight (8) chairs shall be provided.

1. The building shall be provided before work on the project is to begin and shall remain available to the Engineer until the project is accepted by PRASA as complete, unless it is earlier determined by the Engineer to be nonessential. It shall be floored and roofed, weathertight, clean, and ready for use. All windows shall be screened and screen door provided in addition to the regular door. The office shall be provided with two air conditioner of not more than seventy- eight (78) degrees Fahrenheit (25° Celsius) in the office under maximum conditions.

2. The building shall be an independent unit, detached from any office, storage or warehouse building occupied by the Contractor, and shall be at a minimum clear distance of 10 feet from any such building.

3. The building shall be provided of a bathroom with water closet, wash basin, including furnishing and installation of all piping, wiring and any other appurtenance for all utilities, and other facilities necessary to comply with the requirements and regulations of the Department of Health or the authorized agency having jurisdiction thereof.

4. The PRASA's field office shall be provided with telephone, fax, broadband internet service, a wireless router, with complete office equipment: secretary desk, executive desks as needed (two minimum), two (2) legal metal files, a color copier machine (with scanner included), a desktop or notebook computer with the latest version of the Microsoft Office software (including word processor and spreadsheet) and WiFi connectivity, or approved equal, a color laser printer, 56K modem, and two printing calculators. Contractor shall provide all materials required to operate these machines. All these office equipment remains property of the Contractor at the project completion. In the case that the telephone service is not available in the vicinity, a cellular phone and mobile internet service will be provided by the Contractor. The Office equipment shall be maintained in good condition at all times.

5. The monthly payment of services for all utilities such as water, electricity, telephone and internet service shall be paid by the Contractor during the construction period of the project.

6. Should the structure be destroyed or damaged in any manner, except through cause due to negligence of the occupying engineering force, the Contractor shall immediately replace it or provide facilities equivalent to that which is specified herein.

7. After PRASA finishes using the office the Contractor shall remove it from the project, the area cleaned and left in a neat and acceptable condition.

B. Other Requirements.

1. At least five electrical outlets and sufficient lighting equal to 2.5 watts per square foot of floor area shall be provided. All other electrical work should meet the minimum requirements of the local electrical code.

2. Plumbing requirements shall be in accordance with the local requirements.

3. Janitorial service shall be provided and shall include the furnishing of daily supplies of toilet paper, paper towels, soap and daily cleaning.

4. Cold potable water and paper cups shall be provided in sufficient quantities at all times.

C. Typical Plan for Field Office.

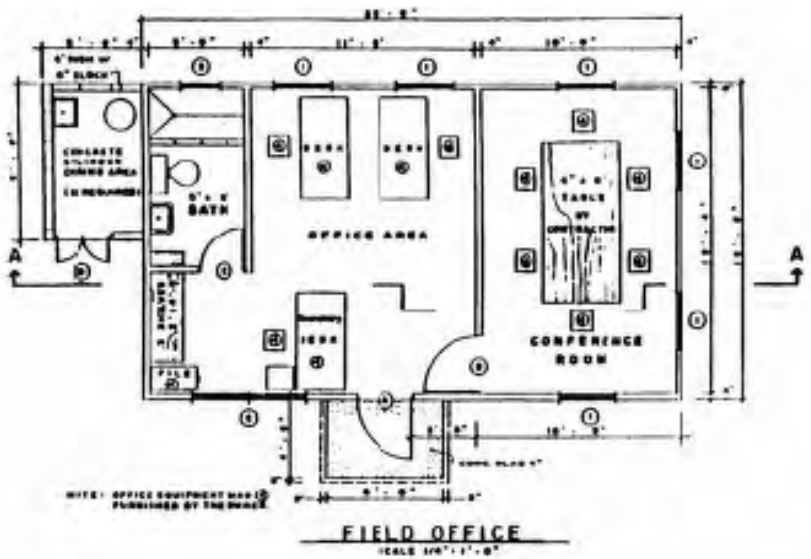

FIELD OFFICE

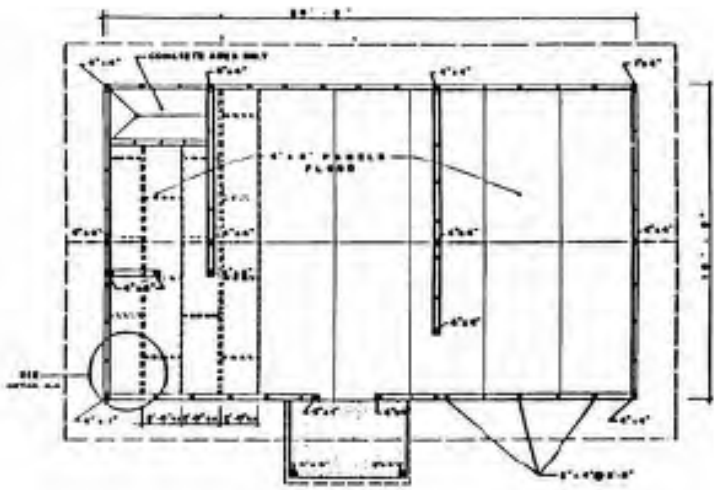

FOOTING & FLOOR DETAIL

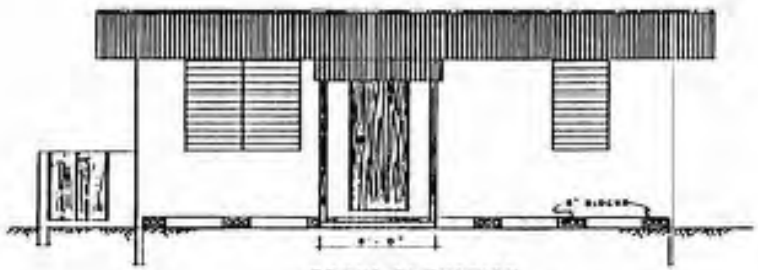

FRONT ELEVATION

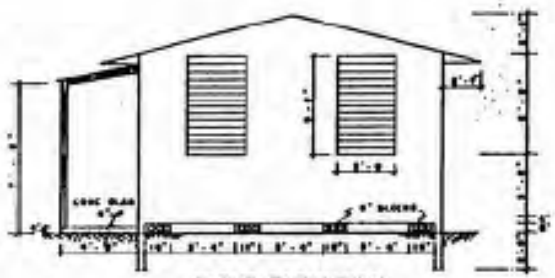

RIGHT ELEVATION

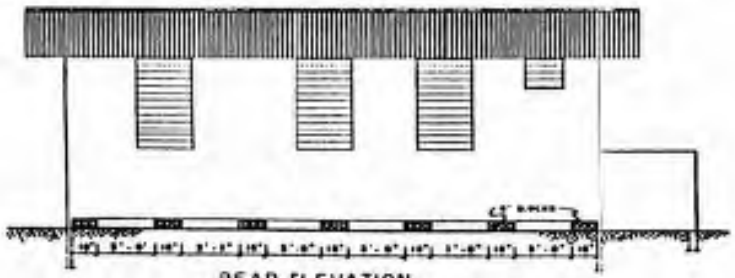

REAR ELEVATION

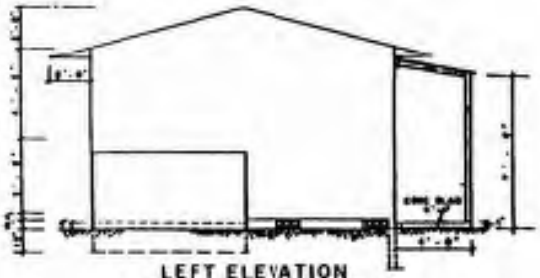

LEFT ELEVATION

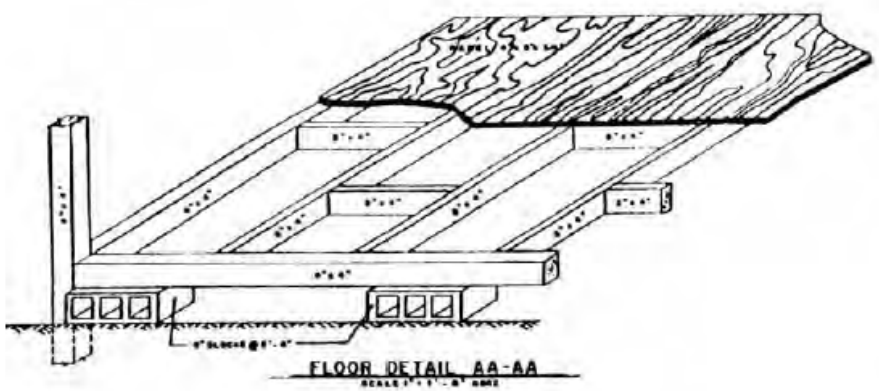

FLOOR DETAIL AA-AA

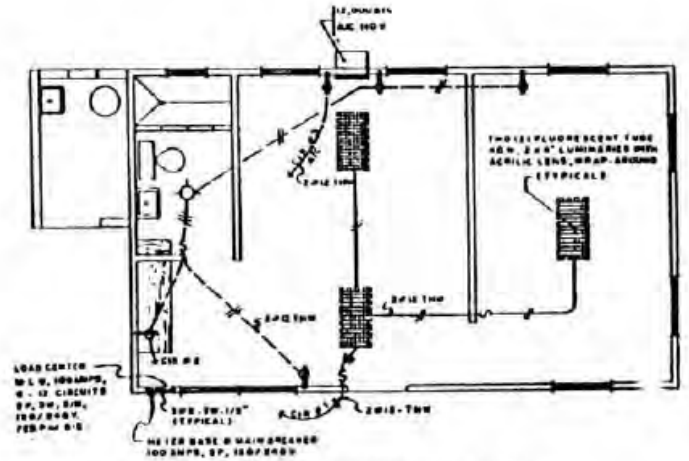

ELECTRICAL LAYOUT

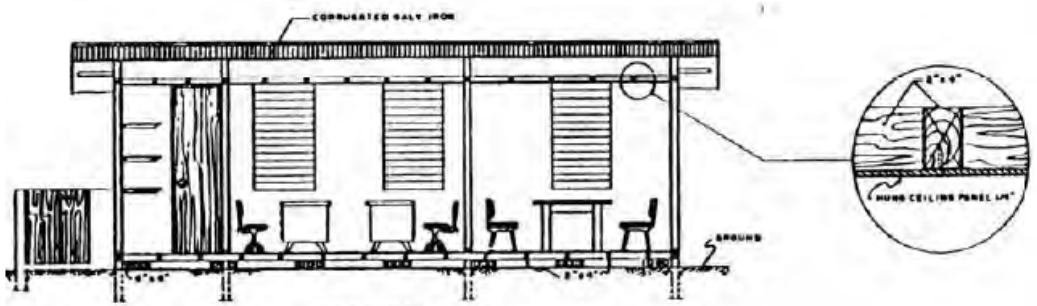

SECTION A-A

LEGEND

- CEILING LIGHT 40W
- DOUBLE WALL RECEPTACLE, DOUBLE OUTLET
- METER BASE & MAIN BREAKER
- LOAD CENTER
- CEILING LUMINARY
- A/C RECEPTACLE 110 V

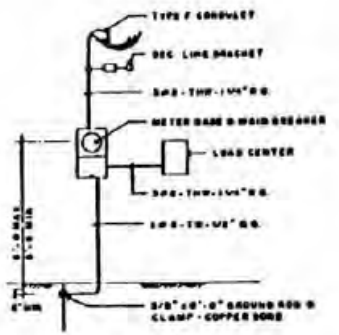

RISER DIAGRAM

NOT TO SCALE

CIRCUIT NUM. 1 - LIGHTS (8) - 20A
CIRCUIT NUM. 2 - LIGHT (1), RECEPT. (4) - 20A
CIRCUIT NUM. 3 - A/C 110 V. - 20A

SCHEDULE OF FINISH

LOCATION	FLOOR	WALLS	CEILING	REMARKS
OFFICE AREA & CONF. ROOM	3/8" PW TREATED	5/8" PW TREATED	1/4" PW TREATED	SEE NOTE 1,2,3
BATH	"	"	"	"
CYLINDER CURING AREA	CEMENT FINISH	8" BLOCK	—	—

WINDOW SCHEDULE

MKD	W	H	REQ	TYPE	REMARKS
1	3'-0"	5'-0"	8	MIAMI ALUMINUM LOUVERS	—
2	8'-0"	5'-0"	1	"	—
3	2'-0"	2'-0"	1	"	—

DOOR SCHEDULE

MKD	W	H	REQ	TYPE	REMARKS
A	3'-0"	7'-0"	1	EXTERIOR & ALUMINUM	SINGLE SWING
B	2'-10"	6'-8"	1	INTERIOR FLUSH	"
C	2'-3"	6'-8"	1	INTERIOR FLUSH	"
D	3'-0"	5'-8"	1	GATE DOOR	DOUBLE SWING

NOTES:

1 - 1/4" PLYWOOD CEILING & INTERIOR WALLS SHALL BE PAINTED BONE WHITE.
2 - EXTERIOR WALLS SHALL BE PAINTED BAMBOO BY SUPERIOR or SIMILAR.
3 - DOORS SHALL BE PAINTED WEDGEWOOD BLUE BY SUPERIOR or SIMILAR.
4 - WATER & ELECTRICAL FACILITIES SHALL BE PROVIDED.
5 - ALL INTERIOR WALLS SHALL BE 1/4" PLYWOOD.

SECTION 015800
PROJECT SIGN

PART 1. GENERAL

A. The Contractor shall furnish ane erect signs at the project site identifying the project as specified and as shown in the detail herewith attached at the location designated by PRASA.

PART 2. PRODUCTS

A. The project signs shall be 12 ft. x 8 ft. with clear and well visible letters, placed in prominent locations selected by the PRASA and maintained in good conditions until completion of the project. The sign shall be as follows:

Supports	Structural lumber, pressure treated.
Face	0.032 Aluminum Sheet, mounted on an exterior pressure plywood
Bolts and Nuts	ASTM A307, galvanized ASTM A153, cadmium plated ASTM A 165 Type NS, or zinc plated ASTM A164 Type GS.
Wood Screws	18-8 Stainless steel or brass.
Nails	Galvanized or aluminum coated.
Rough Hardware	Galvanized steel, 18-8 stainless steel, brass, or aluminum.

B. All surfaces of the project sign and supports shall be given three coats of a suitable wood-protective paint. The Contractor hereunder shall provide the services of a sign painter to letter the sign. The layout of the sign shall be as shown on the drawing at the end of this section. After the construction work is completed and accepted, the Contractor shall remove the signs from the project site unless otherwise directed by the Engineer.

PART 3. EXECUTION

A. Public signs will not be erected on public highway rights-of-way.

B. Location and height of signs will be coordinated with the agency responsible for highway or street safety in the area, if any possibility exist for obstruction to traffic line of sight.

C. The name of the project, the source of the funds and the number of signs will be informed to the Contractor, by the Engineer, as soon as the contract is awarded to him.

D. The project signs shall be installed at the commencement of the project.

E. Contractor shall build and erect the following sign in all projects:

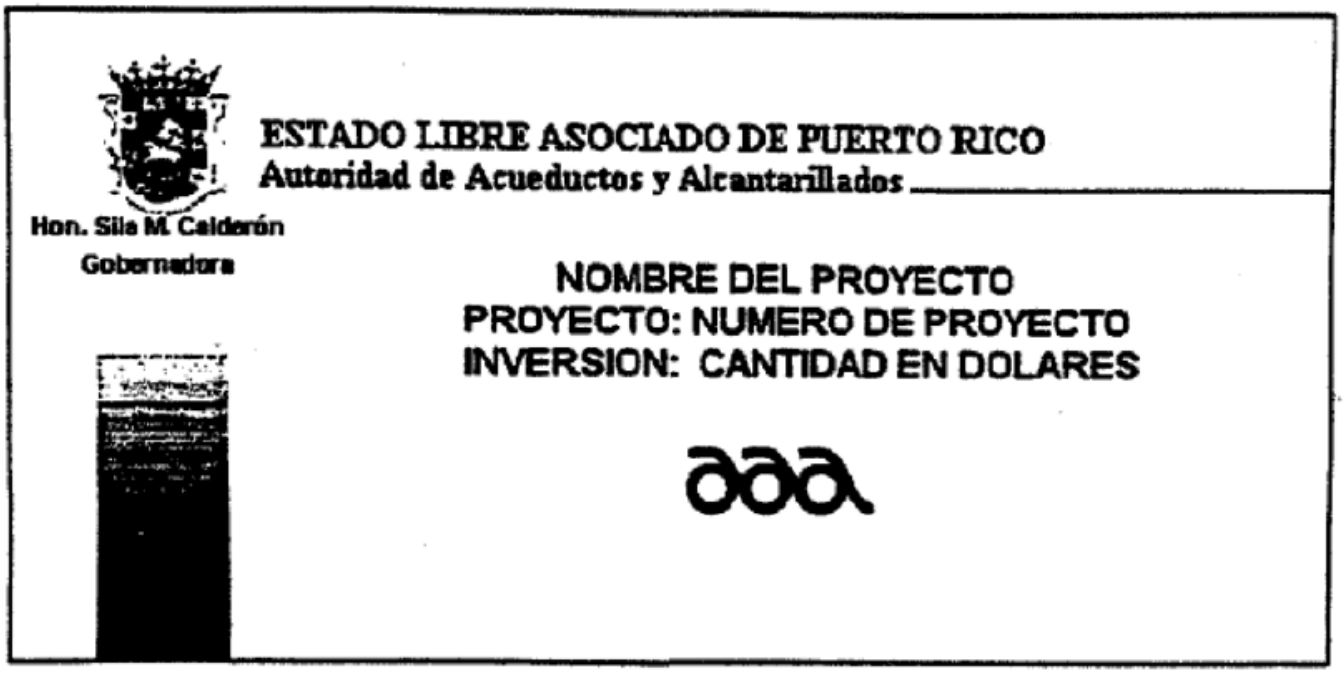

Sign details:

Size: 8' x 4'

The green color must be a green tone mount with a degradation from 100% to 30%.
The Contractor can create the shield by processing a species of mold or sticker for the sign.

F. In projects funden by the Environmental Protection Agency, Contractor shall provide an EPA identification sign at the project site accordingly to EPA Order 1015.IB dated July 28,, 1975. The Project Identificatio Sign shall be displayed in a prominent location at the project site. The basic design of the sign shall be as illustrated below. With the exception of (a) through (c) below, variations to the basic design shal1 be at the discretion of the grant awarding official or contracting officer.

1. The only Federal Government participant indicated shall be EPA. Names of Program Offices shall not apperar.

2. Standardize coloring for all signs shall be as shown below.

3. Identification signs at EPA – funded construction projects shall include prominent display of the pertinent EPA Grant Identification Number; e.g., C-012345-03 (Program Code – Six Digit Grant Serial – Two Digit Project Sequence Number) and shall include the statements "An Equal Employment Opportunity Project" as shown below.

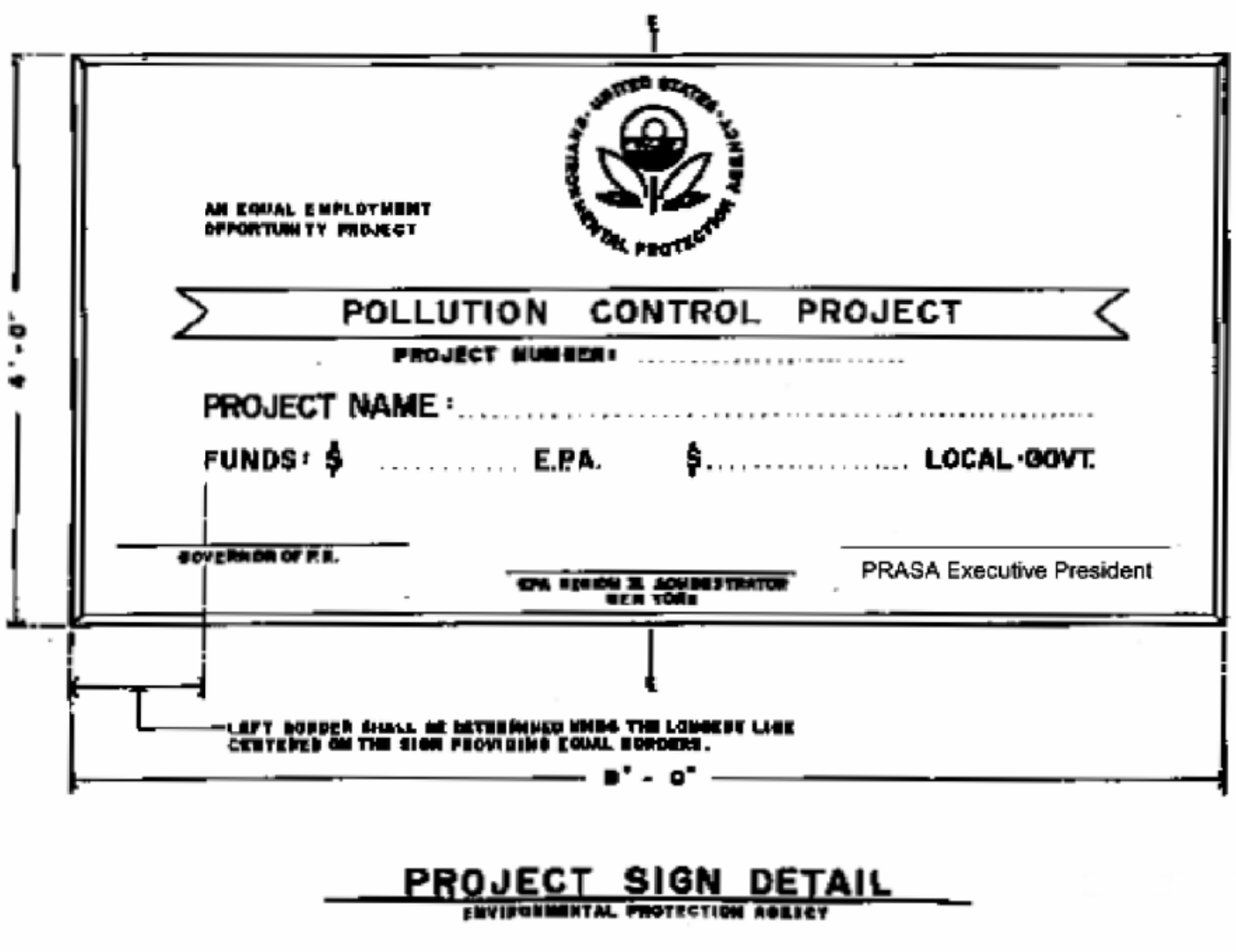

PROJECT SIGN DETAIL

ENVIRONMENTAL PROTECTION AGENCY

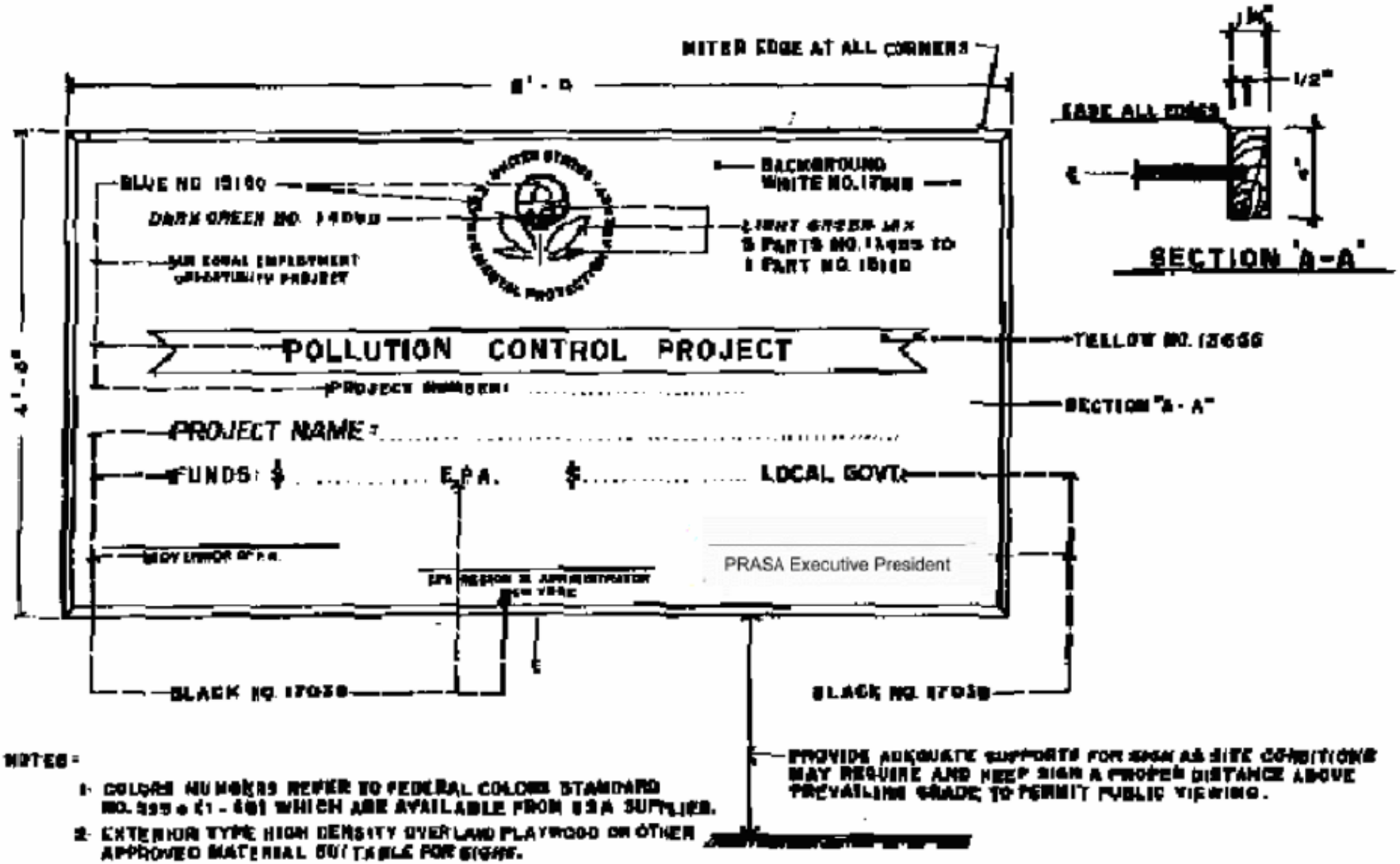

COLORS DETAIL

G. In projects funded by the Department of Health Revolving Fund, Contractor shall also provide an EPA identification sign at the project site according to EPA Order 1015.lB dated July 28, 1975. The Project Identification Sign shall be displayed in a prominent location at the project site. The basic design of the sign shall be as illustrated below. With the exception of (a) through (c) below, variations to the basic design shall be at the discretion of the grant awarding official or contracting officer.

1. The only Federal Government participant indicated shall be EPA. Names of Program Offices shall not appear.

2. Standardized coloring for all signs shall be as shown below.

3. Identification signs at EPA – funded construction projects shall include prominent display of the pertinent EPA Grant Identification Number; e.g., C-012345-03 (Program Code - Six Digit Grant Serial – Two Digit Project Sequence Number) and shall include the statement "An Equal Employment Opportunity Project" as shown below.

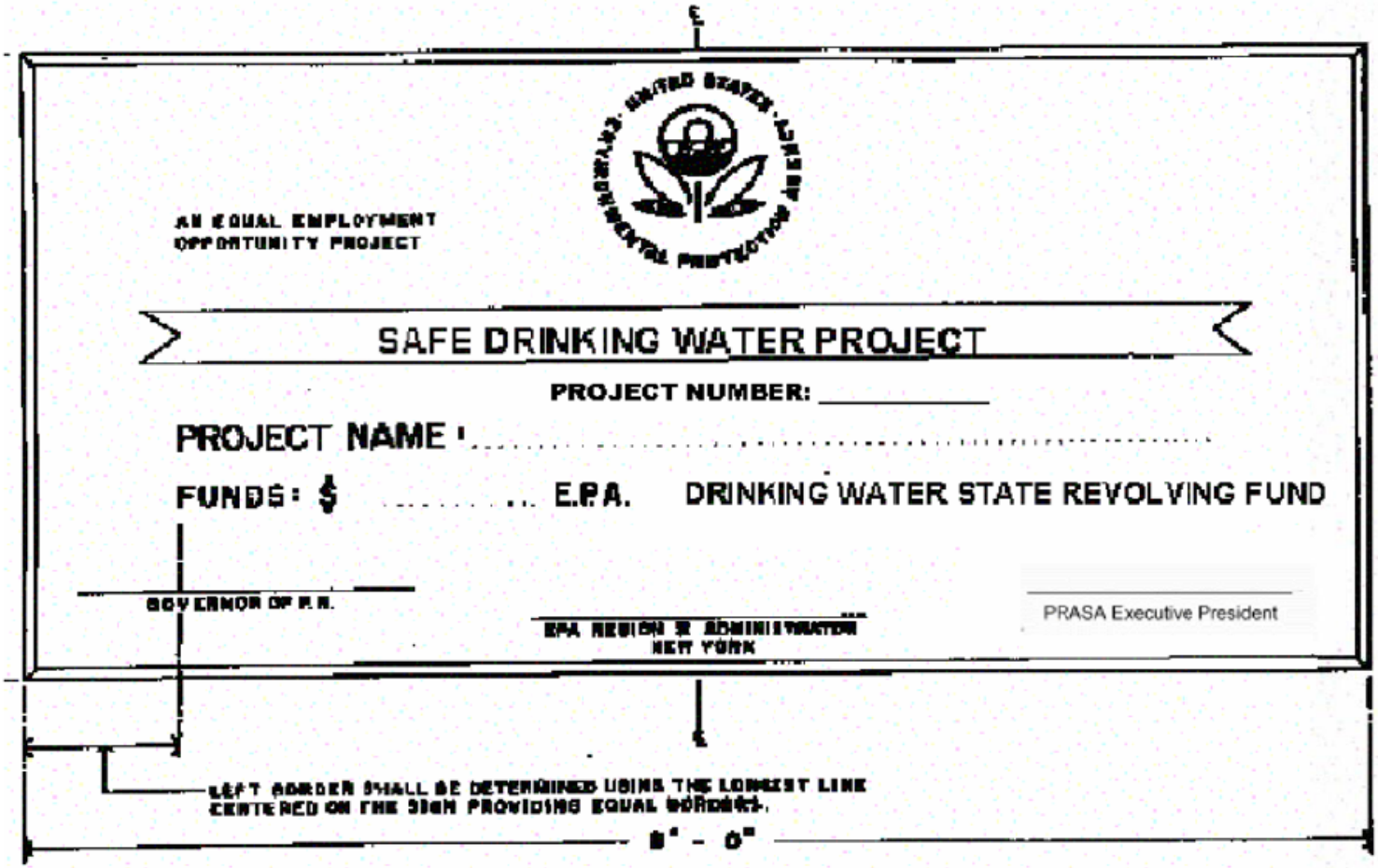

PROJECT SIGN DETAIL

ENVIRONMENTAL PROTECTION AGENCY

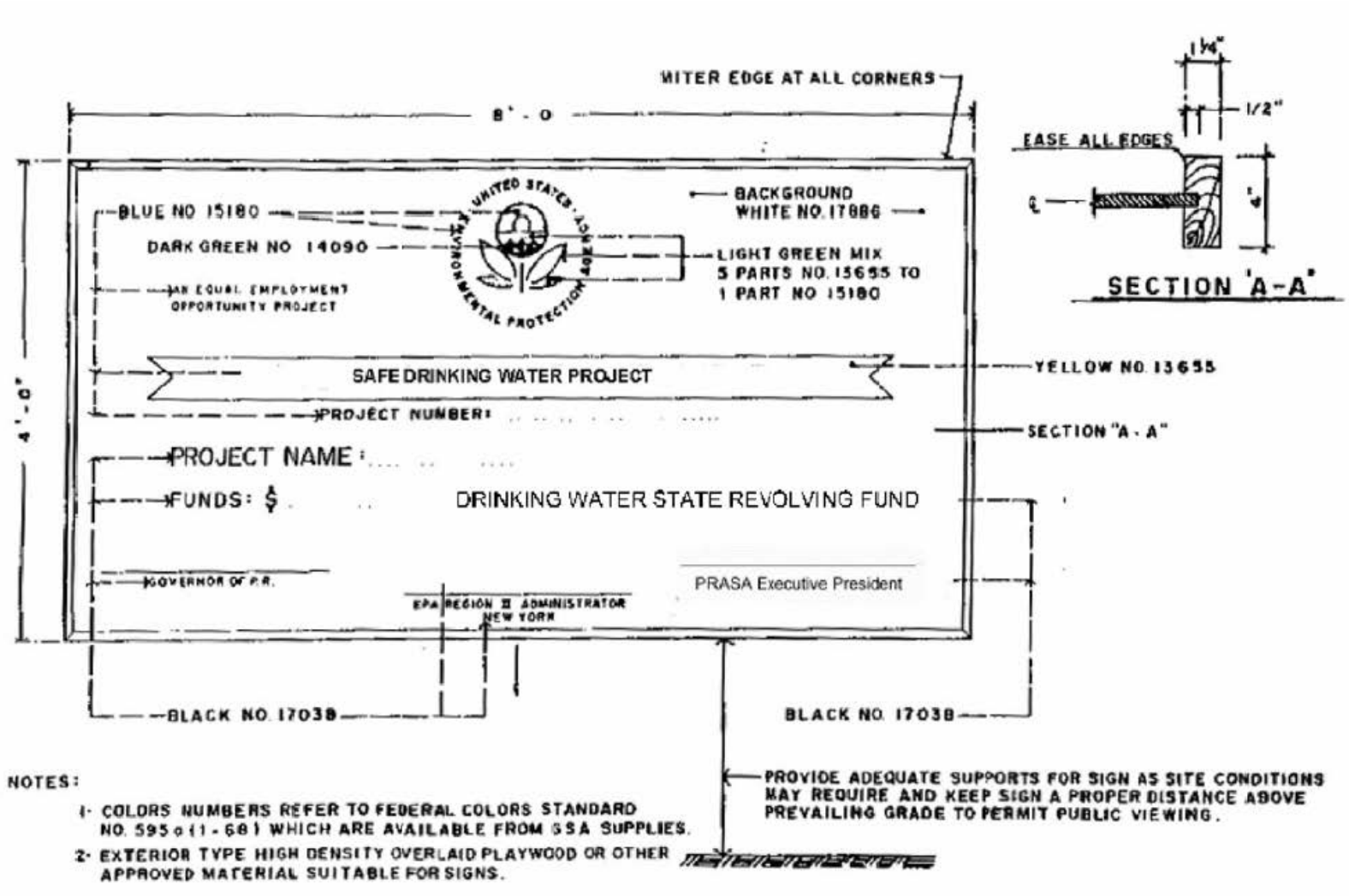

COLORS DETAIL

TEMPORARY CONSTRUCTION SIGN FOR RURAL DEVELOPMENT PROJECTS

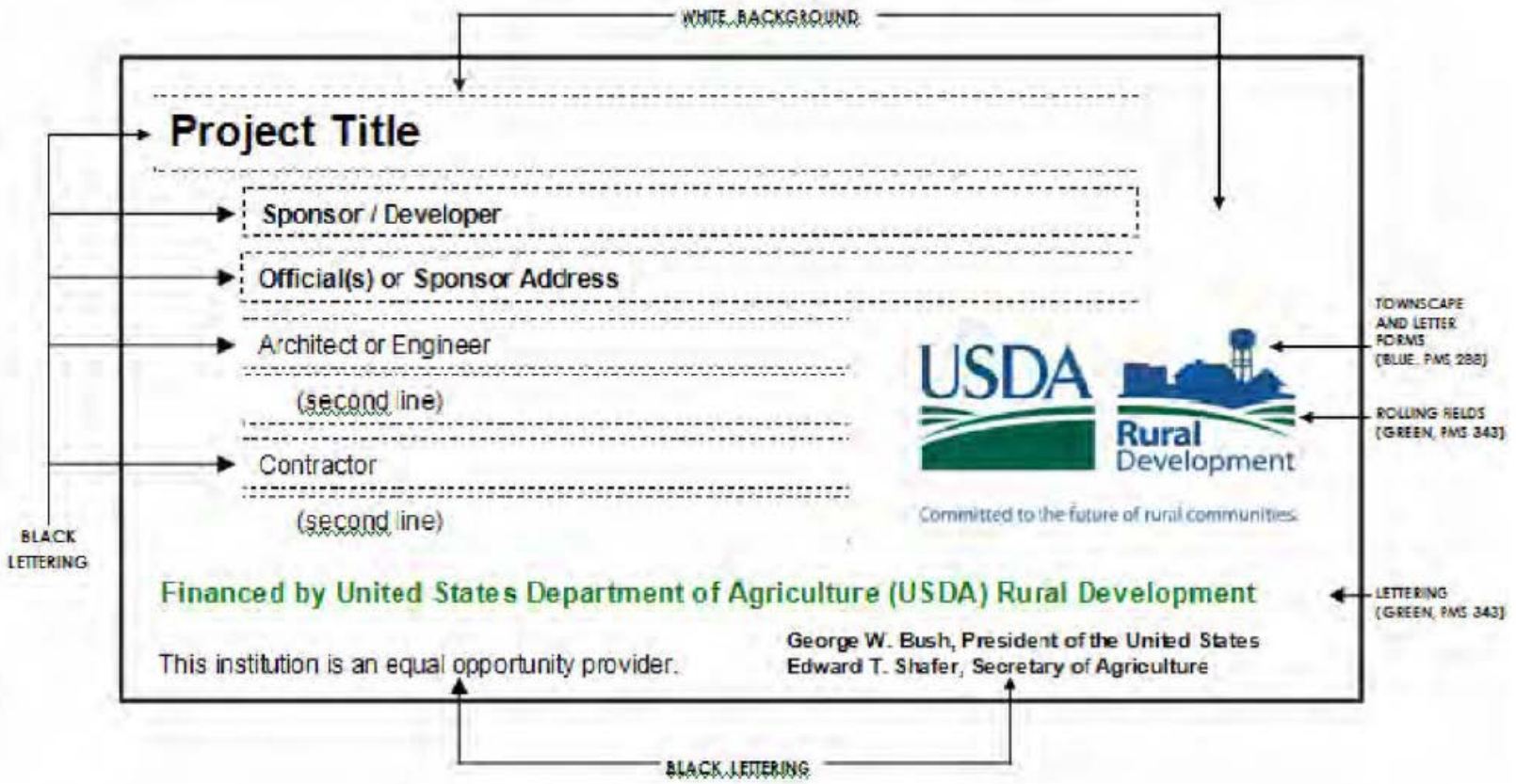

SIGN DIMENSIONS: 1200 mm x 2400 mm x 19 mm (approx. 4' x 8' x ¾")
PLYWOOD PANEL (APA RATED A-B GRADE–EXTERIOR)

Especificaciones

Español-Ingles

ESPECIFICACIÓN SUPLEMENTARIA

RÓTULO PARA IDENTIFICACIÓN DE PROYECTO DE CONSTRUCCIÓN DE OBRA PÚBLICA

I. **Descripción:**

Alcance - Este trabajo deberá consistir en el suministro, instalación y remoción de los rótulos de identificación de proyectos, tamaño 6' x 8', de acuerdo con estas especificaciones y conforme con el diseño, medidas, materiales y ubicación indicada en los pianos o establecida por el inspector del proyecto (Ingeniero o Arquitecto Licenciado) o el funcionario designado como representante de la Agencia de Gobierno para estos fines. Este funcionario deberá además, aprobar y certificar que dichos rótulos cumplen con las especificaciones y parámetros de diseño antes mencionados.

II. **Materiales**

Cada rótulo con su armazón o estructura de soporte, deberá construirse con madera nueva de buena calidad, cumpliendo con las siguientes especificaciones:

a. **Estructura-** Deberá ser de Madera grado Núm. 1 seca, cepillada por las cuatro caras, libre de nudos sueltos o cavidades tipo "doulgas fir", "spruce" roble ciprés, en conformidad a AASHTO M 168. La madera deberá ser tratada a presión con pentaclorofenol o arsenato de cobre cromatado, en conformidad con el estándar de la "American Word Preservers Association" (AWPA).

b. **Paneles-** Deben ser de *W'* de espesor, tipo exterior, panel de alta densidad, pegado con resina, grado B-B o mejor, según lo dispuesto por el "National Bureau of Standards Specifications PS-1"para paneles de construcción. Debe estar laminado con vinilo o aluminio por ambas caras_

c. **Impresión-** "Full Color UV Cure Digital Printing Process", con una resolución mínima de 720 DPI, garantizada por un mínimo de tres años.

d. **Herrajes-** Tornillos,tuercas, arandelas y otros herrajes utilizados para la instalación de rótulos deberán ser de aluminio o acero galvanizado.

III. Requisitos de construcción:

a. El Contratista deberá administrar e instalar la cantidad de rótulos indicada en los documentos de contrato. De no indicarse cantidad alguna, la Agencia de Gobierno dueña del proyecto determinara la cantidad de rótulos a instalarse.

b. Los rótulos deberán instalarse en la ubicación mostrada en los pianos o según lo indique el inspector del proyecto (Ingeniero o Arquitecto Licenciado) o el funcionario designado como representante de la Agencia de Gobierno para estos fines. Los rótulos instalados **no** deberán obstruir la visibilidad de las señales de transito existentes.

c. El Contratista deberá mantener las rótulos en buen estado durante el periodo de duración ("time of completion") del proyecto, entendiéndose que de requerirse algún tipo de retoque de pintura o reparación al mismo, será responsabilidad del Contratista el realizar dichos trabajos.

d. Luego de que finalicen los trabajos de construcción del proyecto y el mismo sea aceptado par el Dueño, el Contratista deberá remover todos los rótulos instalados, a menos que el inspector o funcionario designado coma representante del Dueño indique lo contrario.

IV. Métodos de Medición de Pago

a. Los rótulos de identificación del proyecto deberán medirse, para fines del pago al Contratista, por la cantidad de unidades individuales suministradas e instaladas.

b. La cantidad de rótulos de identificación del proyecto, determinada de acuerdo a lo antes mencionado, deberá ser pagada en base al precio unitario par partida (partida individual) indicado en la lista que se incluye coma parte del contrato. El pago realizado deberá representar una compensación par concepto de suministro de materiales, mano de obra, equipos, herramientas y accesorios necesarios para cumplir satisfactoriamente con la partida antes mencionada, según requerida en las especificaciones.

c. El pago será realizado bajo: **Partida** **Unidad** **de pago**
Rótulo de identificación de Proyecto Por cada rótulo ("each")

d. Los costos relacionados al mantenimiento, retoque de pintura o reparación de los rótulos, durante el periodo de duración del proyecto, así como la remoción de los mismos luego de finalizado dicho periodo, no serán incluidos como parte del pago realizado. Sin embargo, la responsabilidad del Contratista en la realización de estos trabajos permanece como un requisito vigente para este contrato.

SUPPLEMENTAL SPECIFICATION 661
PROJECT IDENTIFICATION SIGN

661-1.1 DESCRIPTION

661-1-01 **SCOPE -** This work shall consist in furnishing, erecting, maintaining and removing **6' x 8'** project identification signs, in accordance with these specifications and in conformity with the design, dimensions, materials and locations shown on the construction drawings or established by the Project Engineer or Government Agency representative.

661-2 MATERIALS

661.2.1 Each sign and supporting frame shall be constructed of good quality new lumber as follows:

a. **Frame** - Shall be dry No. 1 grade lumber, sound, squared, surfaced four sides, free of loose knots or decay. It may be douglas fir, spruce, oak or cypress conforming to AASHTO M 168. Lumber shall be pressure treated with pentachlorophenol or chromated copper arsenate in conformity with the standards of the American Wood Preservers Association (AWPA).

b. **Sign Panel** - Shall be *W'* thickness exterior type, high density plywood, resin-bonded, B-B grade or better as per the National Bureau of Standards Specification PS-1 for construction plywood. It shall be laminated with vinyl or aluminum at both sides.

c. **Printing** - **Full Color UV Cure Digital Printing Process,** with a minimum resolution of 720 DPI. Printing shall be warranted for a minimum of three years.

d. **Hardware -** Bolts, nuts, washers and hardware for erecting the sign assembly shall be aluminum or galvanized steel.

4/5

661-3 **CONSTRUCTION REQUIREMENTS**

661-3.01 The Contractor shall furnish and erect the number of signs indicated in the contract documents. If not so indicated, the Government Agency promoting the project will determine the number of signs to be installed.

661-3.02 Signs shall be erected at the locations shown on the plans or indicated by the Engineer. They shall be so placed as to not obstruct the visibility of traffic signs.

661-3.03 The Contractor shall maintain the signs in good condition throughout the full construction period, repainting and repairing then as necessary.

661-3.04 After the construction work is completed and accepted the Contractor shall remove the signs from the project site unless otherwise directed by the Engineer.

661-4 **METHOD OF MEASUREMENT**

661-4.01 Project identification signs shall be measured by the number of individual units furnished, erected and installed.

661-4.02 The maintenance, repainting and repairing of the signs during the full construction period and the removal of it after the construction work is completed will not be measured for payment but will be subsidiary obligation under this specification.

661-5 **BASIC OF PAYMENT**

661-5.01 The quantity of project identification signs determined as provided above, shall be paid for at the contract unit price per unit for the pay item listed below that is included in the contract. Such price and payment shall be full compensation for furnishing all materials, labor, equipment, tools and incidentals necessary to satisfactorily complete the item as required by the specifications.

661.-5.02 Payment will be made under:

Pay Item	**Pay Unit**
Project Identification Sign	each

5 /5


Boundary Area
8" Width
Boundary Area
8" Height
ESTADO LIBRE ASOCIADO DE
PUERTO RICO
INFRAESTRUCTURA
Tipografía:
División
Bebas Neue
342 pts. (aprox.) - Reverse
Tipografía:
Título
Univers Condensed Bold
534 pts. (aprox.) - 80% Black
Municipio
Univers Condensed Bold
445 pts. (aprox.) - 45% Black
Empleos Generados: 000
Gotham Medium
480 pts. (aprox.) - 60% Black
Inversión Total: $00,000,000
Gotham Medium
356 pts. (aprox.)- 100% Black
6" Width
Escudo Pueblo
8" Height
MUNICIPIO DE
Municipio
Times New Roman Regular
130 pts. (aprox.) - 80% Black
Autoridad de Acueductos
y Alcantarillados
Logo Dependencia
13" Height
00000000000-00-0000-0
Gotham Medium
225 pts. (aprox.)- 100% Black
17" Width



ESTADO LIBRE ASOCIADO DE
PUERTO RICO

INFRAESTRUCTURA

Título

Municipio de

Empleos Generados: 000

Inversión Total: $00,000,000

MUNICIPIO DE

Autoridad de Acueductos
y Alcantarillados

00000000000-00-0000-0

SECTION 016400
MANUFACTURER'S SERVICES

PART 1 GENERAL

1.1 SCOPE

A. This section covers the coordination of training and minimum expected manufacturer services. The requirements of this section are part of the requirements of Section 016500 FACILITY START-UP.

1.2 DEFINITIONS

A. Reference Section 016500, FACILITY START-UP.
B. Manufacturer: Individual or group of people or commercial operation that provides a product fabricated on one or more locations and that is purchased by the Owner and is required to perform per the technical specifications and project requirements after a successful startup process and that it is installed on the Owner property for the purpose that was agreed upon a contract.
C. Services: Activities required by the Owner to the Manufacturer.
D. Facility: Location where the Manufacturer's services are required
E. Startup: Activity that is required, and including all the Manufacturer services to start the proper operation of a product, before the Owner declares it as acceptable for its purpose.
F. Training: Activities that will teach the Owner's personnel on how to properly use and maintain the product fabricated by the Manufacturer, for the continuous successful operation and maximum useful life. A training will include one or more sessions.
G. Training Session: A group of lessons that will be completed, separated by resting time, for the attending audience.
H. Lesson: A part of a session that has a specific subject and is separated from other subjects to improve the learning process.
I. Lesson plan: A written report of the proposed contents and order of a lesson. Shall include time duration of each information discussion.
J. Schedule: A written report that will define the calendar times and dates required for the activities.
K. Person-Day: One person for 8 hours within regular CONTRACTOR working hours.
L. Proper Installation Checklist: A written list of items includes all the verification actions performed by the Manufacturer before determination of proper installation.

1.3 SUBMITTALS

A. Training Schedule: Submit not less than 21 days prior to start of equipment installation and revise as necessary for acceptance.

B. Lesson Plan: Submit proposed lesson plan not less than 21 days prior to scheduled training and revise as necessary for acceptance.

C. Training Session Recordings: Furnish OWNER with two (2) complete sets fully indexed and cataloged with printed label stating session and date taped.

D. Proper Installation Checklist

E. Completed Proper Installation Checklist

F. Manufacture’s Certificate of Proper Installation

1.4 QUALIFICATION OF MANUFACTURER'S REPRESENTATIVE

A. Authorized representative of the Manufacturer, factory trained, and experienced in the technical applications, installation, operation, and maintenance of respective equipment, subsystem, or system. Additional qualifications may be specified elsewhere.

B. Representative(s) subject to acceptance by OWNER’s Representative. No substitute representatives will be allowed unless prior written approval by such has been given.

PART 2 PRODUCTS (NOT USED)

PART 3 EXECUTION

3.1 FULFILLMENT OF SPECIFIED MINIMUM SERVICES

A. Furnish Manufacturers' services, when required by an individual specification section, to meet the requirements of this Section.

B. Where time is necessary in excess of that stated in the Specifications for Manufacturers' services, or when a minimum time is not specified, the time required to perform the specified services shall be considered incidental.

C. Schedule Manufacturer's services to avoid conflicting with other onsite testing or other Manufacturer's onsite services.

D. Determine that all conditions necessary to allow successful testing have been met before scheduling services.

E. Only those days of service approved by PRASA’s representative will be credited to fulfill the specified minimum services.

F. As a minimum Manufacturer's onsite services shall include:

1. Assistance during product (system, subsystem, or component) installation to include observation, guidance, instruction of CONTRACTOR's assembly, erection, installation or application procedures.

2. Inspection, checking, and adjustment as required for product (system, subsystem, or component) to function as warranted by Manufacturer and necessary to furnish Manufacturer's Certificate of Proper Installation.
3. Revisiting the site as required to correct problems until installation and operation are acceptable to ENGINEER.
4. Resolution of assembly or installation problems attributable to, or associated with, respective Manufacturer's products and systems.
5. Assistance during functional and performance testing, and facility startup and evaluation.
6. Training of OWNER's personnel in the operation and maintenance of respective product as required.
7. Additional requirements as may be specified.

3.2 MANUFACTURER'S CERTIFICATE OF COMPLIANCE

A. Shall submit prior to shipment of product or material to the site.

B. PRASA's representative may permit use of certain materials or assemblies prior to sampling and testing if accompanied by accepted certification of compliance.

C. Signed by product manufacturer certifying that materials, manufacture, and product specified conforms to or exceeds specified requirements and intent for which product will be used. Submit supporting reference data, affidavits, and certifications as appropriate.

D. May reflect recent or previous test results on material or product, but must be acceptable to PRASA's representative.

3.3 MANUFACTURER'S CERTIFICATE OF PROPER INSTALLATION

A. Prior the Manufacture`s Certificate of Proper Installation:
1. Perform a walk thru with the Owner to explain the procedures to confirm the proper installation of the equipment or system.
2. Submit to the Owner a check list to be filled out when performances the Manufacturer proper installation inspection.
3. Submit to the Owner the filled Manufacture`s proper installation checklist for each sub- assembly.

B. Manufacturer's Certificate of Proper Installation form, a copy of which is attached to this section, shall be completed and signed by the equipment Manufacturer's representative.

C. Such form shall certify that the signing party is a duly authorized representative of the manufacturer, is empowered by the manufacturer to inspect, approve, and operate their equipment and is authorized to make recommendations required to assure that the equipment is complete and

operational.

3.4 TRAINING

A. General:
1. Furnish manufacturers' representatives for detailed classroom and hands-on training to PRASA's personnel on operation and maintenance of specified product (system, subsystem, component). Provide training for all products unless otherwise specified in the Contract Documents.
2. Furnish trained, articulate personnel to coordinate and expedite training, to be present during training coordination meetings with PRASA, and familiar with operation and maintenance manual information specified in Section 017800, OPERATION AND MAINTENANCE MANUAL.
3. Manufacturer's representative shall be familiar with facility operation and maintenance requirements as well as with specified equipment.
4. Furnish complete training materials, to include operation and maintenance data, to be retained by each trainee.

B. Training Schedule:
1. List specified equipment and systems that require training services and show:
   a. Respective Manufacturer.
   b. Estimated dates for installation completion.
   c. Estimated training dates.
2. Allow for multiple sessions when several shifts are involved.
3. Adjust schedule to ensure training of appropriate personnel as deemed necessary by PRASA, and to allow full participation by Manufacturers' representatives. Adjust schedule for interruptions in operability of equipment.
4. Coordinate with Sections 016500, FACILITY START-UP.

C. Lesson Plan: When specified, prepare for each required course, containing the following minimum information:
1. Title and objectives.
2. Recommended attendees (e.g., managers, engineers, operators, maintenance).
3. Course description and outline of course content.
4. Format (e.g., lecture, self-study, demonstration, hands-on).
5. Instruction materials and equipment requirements.
6. Resumes of instructor(s) providing the training.

D. Pre-startup Training:
1. If the Owner authorizes, include a lesson for the simulation of alarm conditions and how the operator shall react to each of them without damaging the process output.
2. Coordinate training sessions with PRASA's operating personnel and

Manufacturers' representatives, and with submission of operation and maintenance manuals in accordance with Section 017800, OPERATION AND MAINTENANCE MANUAL.

3. Complete at least 14 days prior to beginning of facility startup.

E. Post-Startup Training:
   1. Furnish and coordinate training of PRASA's operating personnel by respective Manufacturer's representatives.
   2. Include all the lessons required to explain the proper monitoring of equipment or systems during normal operation.

F. Recording of Training Sessions:
   1. Furnish audio and color video recording in Compact Digital Video Disc (DVD) recorded by a High Definition (HD) Digital Recording Equipment, of prestartup and post-startup instruction sessions, including Manufacturers' representatives' hands-on equipment instruction and classroom sessions.
   2. DVD's shall be produced by a qualified, professional video recording production company.
   3. Use High Definition compact DVD, suitable for DVD standard reproduction equipment available commercially in the United States.
   4. Include only one training session on each compact DVD.

3.5 SUPPLEMENTS

A. The supplements listed below, following "END OF SECTION", are part of this Specification.
   1. Forms: Manufacturer's Certificate of Proper Installation.

END OF SECTION

MANUFACTURER'S CERTIFICATE OF PROPER INSTALLATION

OWNER_____ EQPT SERIAL NO:_____

EQPT TAG NO:_____ EQPT/SYSTEM:_____

PROJECT NO:_____ SPEC. SECTION:_____

I hereby certify that the above-referenced equipment/system has been:

(Check Applicable)

- ☐ Installed in accordance with Manufacturer's recommendations.
- ☐ Inspected, checked, and adjusted.
- ☐ Serviced with proper initial lubricants.
- ☐ Electrical and mechanical connections meet quality and safety standards.
- ☐ All applicable safety equipment has been properly installed.
- ☐ System has been performance tested, and meets or exceeds specified performance requirements. (When complete system of one manufacturer)

Comments:_____

_____

_____

_____

_____

_____

_____

I, the undersigned Manufacturer's Representative, hereby certify that I am (i) a duly authorized representative of the manufacturer, (ii) empowered by the manufacturer to inspect, approve, and operate their equipment and (iii) authorized to make recommendations required to assure that the equipment furnished by the manufacturer is complete and operational, except as may be otherwise indicated herein. I further certify that all information contained herein is true and accurate.

Date:_____, 20

Manufacturer:_____

By Manufacturer's Authorized Representative: _____
(Authorized Signature)

SECTION 016500
FACILITY START-UP

PART 1 GENERAL

1.1 SCOPE

A. This section covers the requirements for the final startup of a facility that requires the coordination of one or more subsystem startups as per Reference section 016400, MANUFACTURER'S SERVICES.

1.2 DEFINITIONS

A. Reference Section 016400, MANUFACTURER'S SERVICES.

B. Manufacturer: Individual or group of people or commercial operation that provides a product fabricated on one or more locations and that is purchased by the Owner and is required to perform per the technical specifications and project requirements after a successful startup process and that it is installed on the Owner property for the purpose that was agreed upon a contract.

C. Services: Activities required by the Owner to the Manufacturer.

D. Facility: Location where the Manufacturer services are required.

E. Startup: Activity that is required and including all the Manufacturer`s services, to start the proper operation of a product before the Owner declare it as acceptable for its purpose.

F. Training: Activities that will teach the Owner's personnel on how to properly use and maintain the product fabricated by the Manufacturer for the continuous successful operation and maximum useful life. A training will include one or more sessions.

G. Training Session: A group of lessons that will be completed separated by resting time, for the attending audience.

H. Lesson: A part of a session that has a specific subject and is separated from other subjects to improve the learning process.

I. Lesson plan: A written report of the proposed contents and order of a lesson. Shall include time duration of each information discussion.

J. Schedule: A written report that will define the calendar times and dates required for the activities.

K. Proper Installation: A state of confirmation by the Manufacturer or its representative that the equipment or product installation will not affect the operation or performance warranty. If the equipment or product is properly installed then any future defects may not be caused by the quality of the installation.

L. Proper Installation Checklist: A written list of items which includes all the verification actions performed by the Manufacturer before determination of proper installation.

M. Startup checklist: A written list of items which includes all the verification actions performed by the Contractor`s operating personnel before starting the equipment or product operation.

N. Post-startup checklist: A written list of items which includes all the verification

actions performed by the Contractor`s operating personnel before determination that the equipment or product operation is stable and does not requires a troubleshooting action.

O. Troubleshooting: One or more actions required to determine the reason for an equipment or product operational problem.

P. Test: One or more actions required to determine the proper operation of an equipment or product.

Q. Functional Test: A test or tests in the presence of PRASA's representative to demonstrate that the installed equipment or system meets Manufacturer's installation and adjustment requirements and other requirements specified including, but not limited to, noise, vibration, alignment, speed, proper electrical and mechanical connections, thrust restraint, proper rotation, and initial servicing.

R. Performance Test: A test performed in the presence of PRASA's representative and after any required functional test specified, to demonstrate and confirm that the equipment and/or system meets the specified performance requirements.

S. System: The overall process, or a portion thereof, that performs a specific function. A system may consist of two or more subsystems as well as two or more types of equipment. Examples of systems on this Project are as follows:

1. Pumps, motors, and controls.
2. Air stripping system, including air blowers and off-gas units.
3. Instrumentation and control system(s).

T. Facility Start-up Log: A chronological record of the system and process units' performance and adjustments made during the start-up period of the project. All changes in status, performance or system parameters, set points adjustments, and tests results shall be properly logged. Entries shall be made by OWNER, ENGINEER, and CONTRACTOR involved in the monitoring and troubleshooting exercises of Facility Start-up, including occurrence of events and date/time. Facility Start-up Log shall be kept on a form acceptable to the ENGINEER.

1.3 SUBMITTALS

A. Administrative Submittals:

1. Functional and performance test schedules and plan for equipment, units, and systems at least 30 days prior to start of related testing. Include test plan, procedures, and log format.
2. Schedule and plan of facility startup activities at least 21 days prior to commencement.
3. Training Plan

B. Quality Control Submittals:

1. Manufacturer's Certificate of Proper Installation as required.
2. Pre-startup completed checklist

3. Post-startup completed checklist
4. Test Reports: Functional and performance testing, in format acceptable to PRASA's representative and certification of functional and performance test for each piece of equipment or system specified.
5. Certifications of Calibration: Testing equipment.
6. Facility Start-up Log
7. Start-up Summary Report
8. Revisions to the Operations and Maintenance Manual
9. Training Summary Report, including the copies of the evaluations of each of the OWNER's representatives that participated in the training.
10. Performance Testing Summary Report
11. Preventive Maintenance Protocol

1.4 CONTRACTOR FACILITY STARTUP RESPONSIBILITIES

A. General:

1. CONTRACTOR shall prepare and submit for approval by the ENGINEER a Start-up Schedule and Plan that will include, as a minimum the following:
   a. Step by step facility start-up procedures (i.e., valves to be open/closed, sequence and system start-up, proven trigger points, etc.)
   b. Sequence of start-up and integration between the different systems that are part of the complete project.
   c. Requirements for water, power, chemicals, etc. needed for start-up.
   d. Acceptance testing and start-up schedule by equipment, system and complete facility.
   e. Acceptance testing methods used to certify installation and performance tests.
   f. Integrated methods of evaluating the performance of the complete facility.
   g. Quality control procedures
   h. Process and Compliance Sampling Plan
   i. Preventive maintenance duties to be performed on the equipment and systems during the start-up period
   j. Permits required to start operations of the Facility
   k. Critical spare parts
   l. Critical instrumentation
   m. Control system testing protocol (i.e. telemetry, PLC, etc.)

2. Demonstrate proper installation, adjustment, function, performance, and operation of equipment, systems, control devices, and required interfaces individually and in conjunction with process instrumentation and control system.
3. Operate process units and devices. Coordinate operations with existing system and facility operations.
4. Provide sampling, labor, and materials as required and provide

laboratory analyses to confirm that facility meets performance requirements specified in the Contract Documents.

5. Provide water, power, chemicals, lubricants and other items as required for testing, unless otherwise indicated.
6. Provide training to OWNER's representatives prior to commissioning the installed unit, including but not limited to the basis of design, equipment capabilities, operation, maintenance, and troubleshooting, according to Section 016400.
7. Provide the preventive and corrective maintenance, calibration and troubleshooting to the equipment and systems until the OWNER assumes responsibility for the operation of a facility or the ENGINEER notifies the CONTRACTOR, in writing, of the completion of the start-up period, as required by Manufacturer.

1.5 PRASA'S REPRESENTATIVE FACILITY STARTUP RESPONSIBILITIES

A. General:

1. Review CONTRACTOR's test plan and schedule.
2. Witness each functional or performance test.
3. Coordinateother plant operations, if necessary, to facilitate CONTRACTOR's tests.

B. Startup Test Period:

1. Provide coordination with existing systems and facilities operations.
2. Observe facility operations performed by Contractor.
3. Provide key operational personnel to assist CONTRACTOR in the start-up, but the prime responsibility for proper and continuous mechanical operation shall belong to CONTRACTOR. Manufacturer's representatives shall be present during initial start-up period to assure that recommendations for installation certification are primarily considered. Manufacturer representative shall document and certify the equipment installation and operation and shall provide Installation Certificate.
4. OWNER shall assume responsibility for operation of the facility upon completion and final acceptance of the start-up period activities. If the OWNER does not assume operational responsibility of the Facility, and in the opinion of the ENGINEER start-up tasks are completed, the ENGINEER will notify CONTRACTOR, in writing, of the completion of the start-up period process.

PART 2 PRODUCTS (NOT USED)

PART 3 EXECUTION

3.1 TESTING PREPARATION

A. General:

1. CONTRACTOR shall notify OWNER, ENGINEER, and Manufacturer's representative in writing of any change in the schedule originally approved by the ENGINEER as part of the Start-up Plan.
2. Complete Work associated with the unit and related processes before testing, including related Manufacturer's representative services.
3. No system or subsystem shall be subjected to start-up activities unless all components of that system or subsystem, including instrumentation and control devices, properly installed certified, acceptance tested and proven to be operable as intended by the Contract Documents.
4. Furnish qualified Manufacturer's representatives when required to assist in testing.
5. Utilize the Manufacturer's Certificate of Proper Installation Form from Section 016400, MANUFACTURERS' SERVICES, to document functional and performance procedures, results, problems, and conclusions.
6. Schedule and attend pretest (functional and performance) meetings related to test schedule, plan of test, materials, chemicals, and liquids required, facilities' operations interface, and PRASA'S representative involvement.
7. Designate and furnish one or more persons to be responsible for coordinating and expediting CONTRACTOR's facility startup duties. The person or persons shall be present during facility startup meetings and shall be available at all times during the facility startup period.
8. Provide temporary valves, gauges, piping, test equipment and other materials and equipment required to conduct testing.

B. Cleaning and Checking: Prior to starting functional testing:

1. Provide certification of calibration of testing equipment used during the startup period. The calibration shall comply with all requirements of testing equipment Manufacturer.
2. Inspect and clean equipment, devices, connected piping, and structures so they are free of foreign material.
3. Lubricate equipment in accordance with Manufacturer's instructions.
4. Turn rotating equipment by hand and check motor-driven equipment for correct rotation.
5. Open and close valves by hand and operate other devices to check for binding, interference, or improper functioning.
6. Check power supply to electric-powered equipment for correct voltage.
7. Adjust clearances and torques.
8. Test piping for leaks.
9. Balance HVAC systems, measuring airflow (cfm) static pressure, and component pressure losses. Furnish typed report documenting results of balancing.

C. Ready-to-test determination will be by PRASA's representative based at least on the following:

1. Notification by CONTRACTOR of equipment and system readiness for

testing.

2. Acceptable testing plan.
3. Acceptable Operation and Maintenance Manuals.
4. Receipt of Manufacturer's Certificate of Proper Installation.
5. Adequate completion of Work adjacent to, or interfacing with, equipment to be tested.
6. Availability and acceptability of Manufacturer's representative, when specified, to assist in testing of respective equipment
7. Equipment and electrical tagging complete.
8. All spare parts and special tools shall be ready available at the testing site. After startup, all spare parts and special tools, as per Contract, shall be delivered to PRASA.

3.2 FUNCTIONAL TESTING—GENERFAL

A. Begin testing at a time mutually agreed upon by PRASA's representative and CONTRACTOR.

B. PRASA's representative will be present during test. Contractor shall notify in writing, PRASA's representative, and Manufacturer's representative at least 14 days prior to scheduled date of functional tests.

C. Separate items of equipment demonstrated to function properly during subsystem testing may require no further functional test if documentation of subsystem testing is acceptable to licensed design professional and PRASA's representative.

D. Conduct functional tests for each equipment item, system or subsystem.

E. Demonstrate all operational features and instrumentation and control functions while in automatic mode.

F. All functional test results must comply with requirements specified, otherwise will be considered as nonconforming.

G. Performance testing shall not commence until the equipment or system meets the specified functional tests.

3.3 PERFORMANCE TEST—GENERAL

A. Begin testing at a time mutually agreed upon by PRASA's representative, and CONTRACTOR.

B. PRASA's representative will be present during test. Notify in writing PRASA's representative, and Manufacturer's representative at least 14 days prior to scheduled date of performance tests.

C. Conduct performance tests for each equipment item, system or subsystem.

D. Unless otherwise indicated, furnish all labor, materials, and supplies for

conducting the test and taking all samples and performance measurements.

E. Prepare performance test report summarizing test method. Include test logs, pertinent calculations, and CONTRACTOR's written certification that the equipment or system performs as specified.

3.4 STARTUP TEST PERIOD

A. General:

1. Attend planning meetings and arrange for attendance by key major equipment Manufacturer representatives as required by the Contract Documents.
2. Designate one or more persons on the CONTRACTOR's staff other than the field superintendent to be responsible for coordinating and expediting CONTRACTOR's facility startup duties.
3. Filling, draining, aligning, lubricating, stabilizing, adjusting, or other start-up activity time shall not be counted under the Facility Start-up activities pre-set time.
4. When facility startup has commenced, schedule remaining Work so as not to interfere with or delay the completion of facility startup.
5. Support facility startup activities with adequate staff to prevent delays. Such staff shall include, but not be limited to, major equipment and system Manufacturer's representatives, electricians, instrumentation and control personnel, millwrights, pipefitters, and plumbers.
6. Furnish and coordinate specified Manufacturer's facility startup services.

B. Startup Testing:

1. Startup of the entire facility or any portion thereof requires the coordinated operation of the facilities by the CONTRACTOR, subcontractors; OWNER's operating personnel, and Manufacturer's representatives.
2. Startup test period shall occur after all required functional tests have been completed and those performance tests deemed necessary for the safe operation of the entire facility have been completed.
3. Startup of the entire facility or any portion thereof shall be considered complete when, in the opinion of PRASA's representative, the facility or designated portion has operated in the manner intended for 5 continuous days without significant interruption. This period is in addition to any training, functional, or performance test periods specified elsewhere.
4. Significant interruption may include any of the following events:
    a. Failure of CONTRACTOR to maintain qualified onsite startup personnel as schedule.
    b. Failure to meet specified performance for more than 2 consecutive hours.
    c. Failure of any critical equipment unit, system, or subsystem that is not satisfactorily corrected within 5 hours after failure.
    d. Failure of any noncritical unit, system, or subsystem that is not satisfactorily corrected within 8 hours after failure.

e. As may be determined by ENGINEER.

5. A significant interruption will require the startup then in progress to be stopped and restarted after corrections are made.
6. If during the Facility Start-up, any part of the project fails to fully conform to the requirements of the Contract Documents, the Facility Start-up shall be considered to have failed, and the work shall not be considered to be substantially completed. The ENGINEER will notify the CONTRACTOR in writing of each failure event.
7. In the case of Facility Start-up failure, the CONTRACTOR shall promptly repair and remedy for any defects in the Work and shall promptly reschedule and re-start the Facility Start-up for a period of time of not less than five (5) calendar days. No Facility Start-up time will be considered to have accrued to any part of the Work by reason of a failed Facility Start-up.
8. During the Facility Start-up, the OWNER Representative may require the Facility Start-up to be suspended among others, if upon the written request of the CONTRACTOR for correction or adjustment of the Work, the ENGINEER considers such corrections or adjustments insufficient to deem the Facility Start-up to have failed.
9. If the Facility Start-up is suspended for any reason except failure, Facility Start-up time shall accrue to the Work from the time of the beginning of the Facility Start-up and the time of the suspension.
10. If the Facility Start-up is suspended at the request of the CONTRACTOR, the CONTRACTOR shall continue operation and maintenance of the work without additional charges to the OWNER, according to all provisions of this Contract Specifications, and to the extent required by the OWNER. No Facility Start-up time shall accrue to the work during the period of suspension.
11. Completion of the Facility Start-up does not relieve the CONTRACTOR of its other requirements as required by the Contract Documents.

C. Startup Test Reports: As applicable to the equipment furnished, certify in writing that:

1. Hydraulic structures, piping systems, valves and all other associated systems have been successfully tested.
2. Equipment systems and subsystems have been checked for proper installation, started, and successfully tested to indicate that they are operational.
3. Systems and subsystems are capable of performing their intended functions, including fully-automatic.
4. Facilities are ready for intended operation.

END OF SECTION

SECTION 017200
SURVEY AND STAKE OUT

PART 1. GENERAL

1.01 SUMMARY

1.01.1 SECTION INCLUDES

This section includes the performing of all necessary survey work related to the construction of the project, starting out and establishment of lines, grades and slopes as indicated in the Construction Drawings or as ordered by the Engineer.

1.02 SYSTEM DESCRIPTION

1.02.1 PERFORMANCE REQUIREMENTS

A. Construction Drawings indicated base lines and such references bench marks are considered sufficient for the contractor to carp out his stake out survey of the project.

B. For the relocation of utilities, the necessary survey and relocation work shall be performed by the Contractor.

C. During the progress of the construction work the Contractor will be required to furnish all of the survey and stake-out incidental to the proper location of line and grade for each phase of the work.

PART 2. PRODUCTS

2.01 MATERIALS

A. All instruments, equipment, stakes and other material necessary to perform the work shall be provided by the Contractor.

1. **Stakes.** Shall be of a type approved by the Engineer, clearly and permanently marked so as to be legible at all times.

PART 3. EXECUTION

A. Contractor shall perform all necessary survey work related to the construction of the project, starting out and establishment of lines, grades and slopes as required, in accordance with these specifications as ordered by the Engineer.

B. The Contractor shall furnish for the survey work licensed qualified surveyors.

C. The work shall proceed immediately upon award of the contract and shall be expeditiously progressed to completion in a manner and at a rate satisfactory to the Engineer. The Contractor shall keep the Engineer fully informed as to the progress of the survey.

D. It shall be the Contractor's responsibility to maintain the survey and stake–out stakes in their proper position and location at all times.

E. Any existing stakes or markers defining property lines and survey monuments which may be disturbed during construction shall be properly tied in to fixed reference points before being disturbed and accurately reset in their proper position upon completion of the work. Precision electronic distance measuring equipment, theodolites, precise transists and precise self leveling instruments shall be used.

F. The contractor shall be responsible for the accuracy of his work and shall maintain all reference point stakes, etc., throughout the life of the contract, but the precision of his work shall not be less than 1:20,000 in the horizontal plane and shall not be less than 1.3 $(K)^{-1/2}$ millimeters in the vertical plane, where K is the distance in kilometers.

All leveling circuits shall be closed by lining from a bench mark to another, both of known elevations (that have been referred to the local mean sea level datum). In the absence of a second mark to conduct the closure, the levelman shall close back on the starting bench mark within the allowable permissible error.

G. Damaged or destroyed points, bench marks or stakes, or any reference points made inaccessible by the progress of the construction shall be placed or transferred by the Contractor.

H. Preparatory work. The exact position of all work shall be established from control points, base line points or other points which are shown on the plans.

Any error, apparent discrepancy, or missing element in data shown or required for accurately accomplish the stake-out survey shall be referred to the Engineer for interpretation of for furnish when such is observed or required.

All stake out survey work shall be referenced to the center line shown on the plans.

The Contractor shall be responsible for the accuracy of his work and shall maintain all reference point stakes, etc., throughout the life of the contract, damage or destroyed points, bench marks, or stakes on any reference points made inaccessible by the progress of the construction shall be replaced or transferred by the Contractor. Existing or new control points that will be destroyed suring construction shall be damage or destroyed and all reference tirs recorded therefore shall be furnished to the Engineer.

Contractor shall prepare one or more notebooks showing control points, right of way limits, slope stakes, data for cross sections including distances, angles and diferences in elevation between points and offsets stakes needed to establish the exact position of the work from control points. These notebooks shall have all the infomation needed by field crews to carry out the survey and layout work. The notebooks with all computations made to produce the information in the notebook shall be delivered to Engineer in a neat fashion and shall become the property of PRASA.

The Engineer may check all or any portion of the stake-out survey work or notes made by the Contractor. Any necessary correction to the work shall be immediately made. Such checking by the

Engineer shall not relieve the Contractor of any responsiblities for the accuracy or completeness of his work.

I. Survey work. Reference points, base lines, stakes and bench marks for borrow pits shall be established by the Contractor.

All required right-of-way and basement limits shall be established, staked and referenced by the Contractor concurrent with the construction stake-out survey.

The Contractor shall place two offset stakes or references at each center line station and at such intermediate points as the Engineer may direct from computations and measurement made by the Contractor. These stakes shall be clearly marked with the correct center line station number, offset and cut or fill so as to permit the establishment of the exact center line location and elevation during construction. If markings become faded or clured for any reason they shall be restored by the Contractor at the request of the Engineer. The Contractor shall locate and place all cut fill slope, grade, batter boards or other stakes and points as the Engineer may direct, required for the proper progress of the work. All control points shall be properly guarded and flagged for easy identification.

SECTION 017400
CLEANING DURING EXECUTION OF WORK

PART 1. GENERAL

1.01 SUMMARY

1.01.1 SECTION INCLUDES

This section includes cleaning, during progress of the Work, including periods when Work is suspended, at completion of the Work, and as required by General Conditions.

1.02 SYSTEM DESCRIPTION

1.02.1 PERFORMANCE REQUIREMENTS

A. Requirements of regulatory agencies:

1. In addition to the requirements herein, maintain the cleanliness of the Work and surrounding premises within the Work limits so as to comply with federal and local fire and safety laws, ordinances, codes and regulations.

2. Comply with all federal and local anti-pollution laws, ordinances, codes and regulations when disposing of waste materials, debris and rubbish.

1.03 SCHEDULING

A. The Contractor shall schedule cleaning and disposal operations:

1. So that dust, wash water or other contaminants generated during such operations do not damage or mar painted or finished surfaces.

2. To prevent accumulation of dust, dirt, debris, rubbish and waste materials on or within the work or on the premises surrounding the work.

PART 2. PRODUCTS

2.01 MATERIALS

A. Cleaning Materials:

1. Use only cleaning materials recommended by manufacturer of surface to be cleaned.

2. Use each type of cleaning material on only those surfaces recommended by the cleaning material manufacturer.

3. Use only materials that will not create hazards to health or property.

PART 3. EXECUTION

A. Contractor shall clean, during progress of the Work, including periods when Work is suspended, at completion of the Work, and as required by General Conditions.

B. Waste Disposal:

1. Dispose of all waste materials, surplus materials, debris and rubbish off the Project site.

2. Do not burn or bury rubbish and waste materials on the Project site.

3. Do not dispose of volatile or hazardous wastes such as mineral spirits, oil, or paint thinner in storm or sanitary drains.

4. Do not discharge wastes into streams or waterways.

C. During Construction:

1. Keep the work and surrounding premises within work limits free of accumulations of dirt, dust, waste materials, debris and rubbish.

2. Keep dust generating areas wetted down.

3. Provide suitable containers for storage of waste materials, debris and rubbish until time of disposal.

4. Dispose of waste, debris and rubbish off site at legal disposal areas.

D. When the project is completed the Contractor shall:

1. Remove and dispose of all excess or waste materials, debris, rubbish, and temporary facilities from the site, structures and all facilities.

2. Repair pavement, roads, sod, and all other areas affected by construction operations and restore them to original condition or to minimum condition specified.

3. Remove spatter, grease, stains, fingerprints, dirt, dust, labels, tags, packing materials and other foreign items or substances from interior and exterior surfaces, equipment, signs and lettering.

4. Repair, patch and touch up chipped, scratched, dented or otherwise marred surfaces to match specified finish.

5. Remove paint, clean and restore all equipment and material nameplates, labels and other identification markings.

6. Clean all floors, slabs, pavements, and ground surfaces.

7. Maintain cleaning until acceptance and occupation by authority.

SECTION 017800
OPERATION AND MAINTENANCE MANUAL

PART 1. GENERAL

1.01 SUMMARY

1.01.1 SECTION INCLUDES

Contractor shall provide an Operation and Maintenance Manual (O & M Manual) for use by PRASA's personnel. A manual shall be prepared for each pumping station, water and wastewater plant built, modified or rehabilitated by Contractor.

1.02 SYSTEM DESCRIPTION

1.02.1 ADMINISTRATIVE AND TECHNICAL REQUIREMENTS

A. The O & M Manual shall be prepared using all product related information and manufacturer data. It will generally consist of the following:

1. Complete, detailed written operating and maintenance instructions for each product or piece of equipment including: equipment function, operating characteristics, limiting conditions, operating instructions for startup, normal and emergency conditions, regulation and control, and shutdown.

2. Complete, detailed written preventive maintenance instructions.

3. Recommended spare parts lists and local parts supplies.

4. Written explanations of all safety considerations relating to operation and maintenance procedures.

5. Name, address and phone number of manufacturer and its local representative.

6. Copy of all approved Shop Drawings, and copy of warranty bond and service contract as applicable.

7. Copies of manufacturer's manuals as appendices.

8. An emergency operation and trouble-shooting plan shall be included in the Manual.

9. The Manual shall contain a color photograph (aerial, if possible) depicting the facility in it entirety. Also within the Manual there shall be included color photographs of the treatment units and/or equipment being discussed.

10. Construction plans and specifications shall be supplied by P.R.A.S.A. as required in the case of Manual revision or modification. The O & M Contractor must verify in the field the As-Built conditions.

11. All data, information and permits reproduction required from government agencies, public or private organizations, pertinent to the preparation of the best possible Manual shall be obtained by the Contractor.

12. All pertinent information from the Vendor Manuals shall be translated to Spanish for the final Spanish Version.

13. All copy right material used in the manual shall be preceded by the O & M consultant obtaining the copyright holders written permission to use such material. Copies of such permissions shall be supplied to the Authority and the O & M consultant shall hold PRASA and its employees free of any legal responsibility in the manuals use.

B. The O & M Manual shall comply with all the current requirements of the U.S. Environmental Protection Agency (EPA). The current requirements include, but are not limited to the following:

1. Consideration for Preparation of Operations and Maintenance Manuals (EPA 430/9-74-101), and

2. A Planned Maintenance Management System for Municipal Wastewater Treatment Plants (EPA-600/2-73-004).

C. The O & M shall include a Maintenance Management Plan including the following:

1. Equipment Record System.

2. Planning and scheduling of maintenance tasks.

3. Recommended Spare Parts List.

4. Appropriate reference to each equipment manufacturer specification. An interchangeable lubricants chart should be provided.

5. The cross-referencing with the equipment manuals could be used to refer to the maintenance procedures but not as a way of providing information for scheduling, equipment records or preventive maintenance activities to be performed.

D. If the Work includes installing a power generator, the O & M manual shall include the Spill Prevention Emergency Plan required by the Environmental Quality Board.

E. Format Requirements:

1. Use 8-1/2" by 11" paper of high rag content and quality. Larger drawings or illustrations are acceptable if neatly folded to the specified size in a manner which permit easy unfolding. Provide bolted type binding system and identify all sections with reinforced binder taps.

2. All text must be legible typewritten or machine printed originals or high quality copies of same.

3. Each page shall have a binding margin of 1-1/2" and be punched for placement in a triple post binder. Identify each binder with the following:

a) Title "OPERATING AND MAINTENANCE MANUAL FOR name of facility". The title shall also include the type of facility, e.g. Sewage Pump Station, Well.

b) CIP number and applicable Funding Agency number (EPA number, Rural Development number, PWS ID number, etc).

4. Use dividers and indexed tabs between major categories of content such as operating instructions, preventive maintenance instructions, or other. If necessary, place each major category in a separate binder.

5. The text of the manual shall be written in double-face pages to reduce the document volume.

F. A sample table of contents of the electrical system chapter is included below, as ANNEX I.

G. A sample of the Operation and Maintenance Manual (O & M Manual) for a treatment plant is included below as ANNEX II.

1.03 SUBMITTALS

A. Submittal requirements for the O & M Manual are as follows:

1. A draft O & M Manual in English shall be submitted at the 50% of construction milestone.

2. A final O & M Manual in English shall be submitted at the 90% of construction milestone.

3. The final version of the O & M Manual translated to Spanish shall be submitted at the substantial completion of the project.

ANNEX I EXAMPLE OF ELECTRICAL SYSTEM CHAPTER

	CONTENT	PAGE
12-1	**GENERAL**	**12-5**
12-2	**POWER SOURCE**	**12-5**
12-3	**POWER DISTRIBUTION**	**12-6**
12-4	**CONTROL**	**12-7**
12-4-1	General	12-7
12-4-2	Generator	12-7
12-4-3	Automatic Transfer Switch	12-7
12-4-4	Motor Control Centers	12-8
12-5	**ALTERNATE POWER SOURCE**	**12-11**
12-5-1	General	12-11
12-5-2	Emergency Plant	12-12
12-5-3	Operating and Control	12-12
12-6	**DESCRIPTION OF ELECTRICAL EQUIPMENT**	**12-13**
12-7	**ELECTRICAL EQUIPMENT MAINTENANCE**	**12-28**
12-7-1	General	12-28
12-7-2	Circuit Brakes	12-30
12-7-3	Lighting Fixtures	12-30
12-7-4	Flowmetering System	12-32
12-7-5	MCC & Panelboards	12-62
12-7-6	Automatic Transfer Switch	12-66
12-7-3	Engine Generator Set	12-66
12-7-8	Motor Starters	12-71
12-7-9	Polymax	12-72
12-7-10	Ronk Power Factor Correction Cap	12-74
12-7-11	Comminutors	12-75
12-7-12	Solenoid Valves	12-77
12-7-13	Series BI & DI Metering Pumps	12-79
	APPENDIX	
	A- WIRING DIAGRAMS	APPENDIX A
	B- GENERATOR WIRING DIAGRAMS	APPENDIX B
	C- GENERAL INFORMATION	APPENDIX C

ANNEX II
O & M MANUAL

1. **An Introduction and Manual User Guide**
   - **a)** Operation and Managerial responsibility
     - **1)** Operator responsibilities defined
     - **2)** Manager responsibilities defined
     - **3)** List of available training
     - **4)** List of recommended publications
     - **5)** List of publications furnished to the facility.
   - **b)** Process Type Description
     - **1)** Type of treatment process
       - a. Brief description of major processes
       - b. Brief description of individual units
     - **2)** Flow pattern with diagram
2. **Permits and Standards**
   - **a)** Treatment Requirements/Effluent Limitations
   - **b)** List of Permits Affecting Facility (including NPDES Corps of Engineers Section 10/404, etc.)
     - **1)** Permit number and renewal date
     - **2)** Permit requirements/regulations of permitting agency
     - **3)** Reporting procedure for spills
   - **c)** State Water Quality Standard for Receiving Stream
3. **Description. Operation, and Control of Project Facilities**
   - **a)** For Each Process Unit, General Coverage of the following:
     - **1)** Description, function flow routing and design efficiency
     - **2)** Listing of major components and mechanical equipment
     - **3)** Relationship to adjacent units
     - **4)** Methods of control
     - **5)** Discussion of common operating problems and control
     - **6)** Start-up procedures
     - **7)** Emergency shutdown procedures
   - **b)** For Each Process Units, Specific Coverage of the following
     - **1)** Normal operation (valve positions, sludgers depths, etc.)
     - **2)** Alternate operation modes
     - **3)** Emergency operations/failsafe features
4. **Detailed Operation and Controls for Sludge Handling Facilities**
   - **a)** Basic Principles
   - **b)** Sludge Digestion
   - **c)** Sludge drying beds or Dewatering facilities
5. **Personnel**
   - **a)** Staffing and Training Plan
     - **1)** Supervision
     - **2)** Administration
     - **3)** Operation
     - **4)** Maintenance
     - **5)** Total personnel
     - **6)** Annual training

7) Laboratory training needs

b) Qualifications
   1) Training
   2) Skills required
   3) Experience
   4) Certification required

c) Certification
   1) Copy state rules and regulations
   2) Certification requirements in facility

6. Laboratory Testing and Process Control

a) Outline of Sampling and Testing Program.
   Discussion of Purpose

b) Discussion of Laboratory Results.
   Expected Ranges and Process Control Adjustments from Test Results

c) Provision of Sample Laboratory Worksheets.
   Instructions, and Test Results Forms

d) Recommended List of Laboratory Reference

e) Laboratory Equipment. Supplies and Chemicals Inventory

7. Records

a) General - Importance of Record keeping

b) Facility Construction Records

c) Sample of Saily Operating Log of Process, Operations, Instructions

d) Sample of Monthly Operating Report to State Agency and Instructions

e) Sample of Annual report Format

f) Operating Cost Record keeping System Recommendations

g) Personnel Record System Recommendations

h) Emergency Conditions, Bypass Reports, Permit Violations, etc.

i) Maintenance and Laboratory, If Not Provide Elsewhere

8. Maintenance

a) Conceptual Description on Maintenance Program

b) Equipment Record System
   1) Equipment numbering system
   2) Equipment catalog (Configuration list)
   3) Maintenance record cards, instruction
   4) Nameplate data cards, all major equipment
   5) List of warranted equipment, warranty provisions

c) Miscellaneous Maintenance Records

d) Planning and Scheduling
   1) Normal preventive maintenance schedule provided
   2) Lubrication schedule and lubricant list
   3) Emergency, corrective maintenance
   4) Work order system and sample form

e) Storeroom and Inventory System
   1) Recommended list of spare parts
   2) Procedures, stockroom inventory, sample forms and records

f) Special Tool List and Tool Room Control

g) Maintenance Personnel Staffing Requirements
h) System for Cost Accounting and Budgeting
i) Recommended List of Outside Contract Maintenance Tasks and Firms

9. Emergency Operating and Response Plan
a) Objectives
b) Vulnerability analysis
c) Mutual Aid List
d) Emergency Equipment List
e) Records Preservation
f) List of Industrial Sources (Including Monitoring and Response System)
g) Police/Fire Coordination
h) Personnel Assignment in Detail
i) Emergency Operating Plan

10. Safety
a) Importance of Safety Program
b) Content
1) Emergency phone list
2) Safety equipment list
3) Sever hazards
4) Electrical hazards
5) Mechanical equipment hazards
6) Explosion and fire hazards
7) Bacterial infection
8) Chlorine hazards
9) Oxygen deficiency/gases
10) Laboratory hazards
11) Process chemical handling
12) List of references
c) Periodic Safety Program Review
d) Accident Report From

11. Utilities
a) List of Utility Suppliers
1) Electrical
2) Telephone
3) Natural Gas
4) Water
5) Fuel Oil
b) Capacities, Limitations, Responsibility Coordination

12. Electrical System (see example of required information for this chapter in Annex I)
a) Power Source Description
b) Distribution System
c) Control and Monitoring System
d) Emergency Procedures

13. Appendix
a) Schematics
b) Valve Indices

c) Sample Forms
d) Process Chemicals/Source
e) Detailed Design Criteria
f) Equipment Suppliers
g) Manufacturer's Manuals
h) Sources: Service and Parts
i) As-Built Drawings
j) Approved Shop Drawings
k) Dimension Prints
l) Construction Photos
m) Warranties and Bonds
n) State O & M Inspection Form
o) EPA Form 7500-5
p) Sever Use Ordinance
q) Industrial: Ordinance/Control.
r) Pretreatment Control/Ordinance
s) Piping Color Code
t) Protective Coating List
u) Sewer Maintenance Program
v) Map of Collection System and Lift Stations
w) Recommended References

CONT. OF ANENEX II

OPERATION AND MAINTENANCE MANUAL

An adequate Operation and Maintenance Manual (O&M) is needed as a day to guide for operations. The manual should have detailed information regarding to the proper operation and the maintenance needed of the treatment works. It shoul include the following items

1. Design information – including design and peak flows, pumps capacities, detention times, G values for the mixing chambers, surface overflow rates for the settling tanks, filtering media composition, filtering rates and contact time (CT values) for the plant.

2. Startup procedures for each unit process and piece of equipment.

3. Unit process monitoring and control information.

4. Maintenance management system and schedule for mechanical equipments, including: lubrication, oil and filter changes, and other preventive and routine maintenance.

5. Maintenance management system and schedule for mechanical equipments, including: sludge blanket monitoring, sedimentation tanks cleaning, other units cleaning, filter media monitoring and replacement, etc.

6. Laboratory test for monitoring and controlling unit process and specific laboratory test reports to be sent to the state agencies.

7. Safety procedures, with particular emplhasis on hazardous areas such as chlorination facilities.

8. Troubleshooting procedures for problems which tipically occur in treatment facilities with special attention to sudden turbidity increases.

9. Emergency operation plan which anticipates emergency conditions (e.g., power outage, chlorine leak, etc.) and designated officials to be notified and procedures to be followed until normal operations can be resume.

10. A summary of the normal operating conditions of each unit in terms of the water quality parameters (e.g., pH, turbidity, residual chlorine, etc.)

11. A standard operating procedures and pocket guides that summarize equipment start up, shutdown, routine operation, trouble shooting and safety. The pocket guides will be small, hand-carried booklets containing essential information and procedures for facility operation (it should be written in Spanish).

SECTION 017805
HAZARD IDENTIFICATION

PART 1. GENERAL

1.01 SUMMARY

1.01.1 SECTION INCLUDES

This sections includes the identification of hazards and warning signs.

PART 2. PRODUCTS

2.01 HAZARD IDENTIFICATION AND WARNING SIGN

A. All physical hazrds within the scope of the Project shall be identified by signs or marking as required by OSHA and described in the Federal Regulations, Title 29, Parts 1901.144, "Safety Color Code, for marking Physical Hazards" and Paragraph 1901.145 "Specifications for Accident Prevention Signs and Tags", latest available revision.

B. Signs, tags, tapes and other materials used for this purpose shall be of as good or better quality and durability as those manufactured by W.H. Brady Company, Milwaukee, Wisconsin, or Seton Name Plate Corporation, New Haven, Connecticut or approved equal.

C. Type or Class of Service:

1. For attachment to smooth metal, painted or enameled surfaces, use self-sticking vinyl, as Brady B-940, Seton or approved equal. This may also be used for message section on standard warning or directional signs.

2. For attachment to rougher, porous surfaces; such as concrete or wood structures, chain link fencing, etc., use self-supporting fiberglass, as Brady B-60, Seton or approved equal. When affixing to curved object such as rough pipe or pole, use polyethylene such as Brady B-450, Seton or approved equal.

D. Minimum Dimensions: Accident prevention signs shall be of OSHA standard dimensions, of the sizes called for in Paragraph 2.05, Sign Schedules. Dimensions are in millimeters, for horizontal pattern, height by width. For upright pattern, reverse the dimensions.

E. Colors: Colors of signs, symbols and lettering shall comply with the requirements of OSHA 1910.145.

2.02 SIGNS

A. General: Classification of accident prevention signs and tags (per OSHA):

1. Danger Signs. White letters or red oval surrounded by rectangular black held in combination with specific message sections as called in Paragraph 2.05, Sign Schedules.

2. Caution Signs. Yellow letters on a black field in combination with specific message sections called for in Paragraph 2.05, Sign Schedules.

3. Safety and Other Instructional Signs. The colors and design of instructional signs shall be red block capital letters on white background, with text and sizes as indicated in Paragraph 2.05, Sign Schedules.

B. General: Classification of Hazard Identification Signs shall be in accordance with NFPA 49.

1. Hazard Signs: Colors in accordance with NFPA 49.

2. All signs shall be 406 mm x 406 mm (16" x 16" with each individual diamond 102 mm x 102 mm (4"x 4")).

2.03 SIGN SCHEDULES

A. "Danger Signs"

1. Description:

Item	Specific Message Section	Size-Millimeters
D-1	High Voltage	178 x 254
D-2	High Voltage	254 x 406
D-3	Hazardous Area No Smoking	254 x 406

2. Location Schedule:

Item	Location
D-1	On outside door of motor control centers and distribution panels and switchgear.
D-2	Adjacent to transformer.
D-3	At chlorine room.

B. "Caution Signs"

1. Description:

Item	Specific Message Section	Size-Inches
C-1	Non-Potable Water Do not drink	178 x 254

2. Location Schedule:

Item	Location
C-1	Mount sign at each plant water hose station and at aerator.

PART 3. EXECUTION

3.01 INSTALLATION

A. Contractor shall furnish materials, equipment, labor and other required to install the identifications for pipes, equipment, and signs as specified above.

SECTION 02A015
ROCK EXCAVATION

PART 1. GENERAL

1.01 SUMMARY

1.01.1 SECTION INCLUDES

This section includes rock excavation and backfilling as required, specified or ordered by the Engineer for the construction of the work, including trench excavation for water mains, sewer lines, etc., and any incidental work as hereinafter specified. All other work including extracting the demolished rock, dewatering, sheating, shoring, bracing, backfilling, rolling, tamping, etc. are not part of this section.

1.01.2 DEFINITION

A. Rock excavation includes all soil material which cannot be excavated by a backhoe, or bulldozer with ripper, and that it requires the use of pneumatic brakers, blasting, or other rock excavating method approved by Engineer, to produce fragmentation of the soil material in order to be excavated.

The equipment to be used in determining the presence of rock must have at least 280 horsepower. If the equipment is a backhoe it must have a trenching bucket.

1.01.3 MEASUREMENT OF EXCAVATED ROCK VOLUME

A. Rock excavation shall be measured in bank-volume for payment purposes. The method to be used in measurement of the excavated rock bank-volume in trench excavation for payment purposes shall be the following:

1. The excavated rock bank-volume shall be calculated based on a trench with vertical parallel sides, the actual vertical rock height as measured at field, and the actual horizontal length of rock along the trench as measured at field. The distance between the vertical sides of the trench shall be as per trench cross section shown on Drawings. This depth shall be measured from the top of the road surface or the ground, if no road exists, to the invert elevation of the pipe.

2. After trucks haul the material, rock excavation bank-volume is obtained from the loose-volume occupied by the material in the trucks, which is converted to bank-volume by deducting thirty percent (30%).

1.01.4 PAYMENT

Payment for rock excavation will be as indicated in the Proposal.

A. If the proposal indicates that payment for rock excavation will be made on a unit price basis then:

1. Rock excavation work will be paid on a dollar per bank cubic meter basis at the unit prices specified in the Proposal. Payment for rock excavation shall only include the demolition of the

rock within the trench, including drilling, blasting, and any other method used for rock fracturing, labors, tools, materials, equipment and appliances necessary to prepare the rock to be excavated.

2. Excavation of the demolished rock, sheating, shoring, bracing, dewatering, backfilling, tamping, rolling, fill material, pavement demolition and reposition; and all labor, tools, materials and equipment necessary to complete the work to excavate the trench and install the pipe shall be paid under the lump sum price of the Item 1 of the Proposal.

B. If the Proposal indicates that payment for rock excavation will be made on a lump sum basis then:

1. Payment for rock excavation is included in the total lump sum amount of the contract.

1.01.5 SUBMITTALS AND APPROVALS

A. Prior to initiating the use of explosives, Contractor shall submit to PRASA evidence of complying with the special insurance requirements which PRASA requires when explosives are used.

B. Permits. The Contractor shall obtain and file with the Engineer all applicable permits including those from the "Centro de Coordinación de Excavaciones y Demoliciones (CCED)" of the Public Service Commission, State Public Works Department, Department of Natural Resources, U.S. Corps of Engineers, municipal government, or any other agency having jurisdiction, before starting work, and shall comply with all requirements, stated on said permits. All charges incidental to these permits shall be at the Contractor's expense.

PART 2. PRODUCT

A. All products shall be as specified, indicated in the Construction Drawings and/or as required by Engineer to complete the specified work.

PART 3. EXECUTION

3.01 CONSTRUCTION

A. Contractor shall demolish the rock within the trench, including drilling, blasting, and any other method used for rock fracturing including labor, tools, materials, equipment, and appliances necessary to prepare the rock to be excavated, as required, specified or ordered by the Engineer for the construction of the work.

B. Clearance in Rock. Ledge rock, boulders and large stones shall be removed to provide a clearance of at least fifteen (15 cm.) centimeters below the outside bottom of all pipes, valves or fittings and to a clear width of fifteen (15 cm.) centimeters on each side of all, valves, fittings and structures.

C. Drilling and Blasting. Blasting will be permitted only when proper precautions have been taken for the protection of all work, property and persons. Explosives shall be stored, handled and used as prescribed by the Laws and Regulations of the authorities having jurisdiction and the

Contractor/Subcontractor shall obtain all permits and pay all fees required. Blasting Caps, or other exploiters or fuses shall in no case be stored or kept in the same place in which dynamite or other explosives are stored.

The Contractor shall be liable for all injuries or deaths to persons and for all damages caused by or resulting from the used, storage, transportation or handling of explosives or by blasting. Drilling and blasting shall be carefully done. Contractor shall exercise the utmost care with the explosives so as not to endanger life and property and he shall be responsible for any and all damages that may result from his use of explosives. Any damage to finished work or structures, existing or under construction, resulting from blasting shall be repaired to the satisfaction of the Engineer at the Contractor's own cost and expense. Approval of methods of transportation, storage and use of explosives and accessories, by concerned Agencies, shall in no way relieve the Contractor of his responsibility in drilling and blasting operations as called for herein.

Blasting operations shall be conducted under the most careful and experienced supervision. Contractor shall keep the Engineer informed as to his drilling and blasting operations.

Contractor shall furnish and erect special signs to warn the public of his blasting operations. Such signs shall be placed at appropriate points within the project limits, shall be maintained so as to be clearly evident to the public during all critical periods of the blasting operations and, if blasting is by means of electric detonators, shall include a warning statement to have radio transmitters turned off.

Contractor shall notify each property owner and public utility company having structures in the proximity to the site of the work of his intention to use explosives. Such notice shall be given sufficiently in advance to enable the companies to take such steps as they may deem necessary to protect their property from injury.

The section titled BLASTING contain additional specifications regarding this work.

SECTION 02A030
BLASTING

PART 1. GENERAL

1.01 SUMMARY

1.01.1 SECTION INCLUDES
This section includes the blasting operations needed to accomplish the excavation shown in the Construction Drawings or found necessary during construction, in accordance with the procedures specified herein.

1.01.2 REGULATIONS AND REFERENCES

The Contractor shall comply fully with all applicable sections of the following regulations:

A. Organized Crime Control Act of 1970, Title XI, Regulation of Explosives (18 U.S.C. Chapter 40: 84 Stat. 952 of the Organized Crime Control Act of 1970 (84, Stat 92), Public Law 103-322 (Stat. 1796), and Public Law 104-132 (110 Stat. 1214).

B. Commerce in Explosives, Part 55 of Title 27, Code of Federal Regulations (which implements the provisions of Title XI, Regulation of Explosives).

C. Safety and Health Regulations for Construction, Title 29, Labor Chapter XVII, Bureau of Labor Standards, Department of Labor Parts 1910 4 1926 (published in Federal Register Volume 36, Number 75).

D. U.S. Army Corps of Engineers Safety and Health Requirements Manual, EM 385-1-1, in effect at the time of bid opening.

E. Interstate Commerce Commission Regulations.

F. Applicable U.S. Coast Guard Regulations and Commonwealth, Municipal, or Port Authority codes, rules, regulations, and laws.

G. OSHA Regulations, 1926, Sub-part U, "Blasting and the Use of Explosives.

H. H. Federal Register, Volume 36, Number 10, 15 January 1971, Department of the Treasury.

I. Transportation of explosives shall meet the provisions of Department of Transportation regulations contained in 46 CFR Parts 146-149, Water Carriers; 49 CFR Parts 171-179, Highways and Railways; 49 CFR Part 195, Pipelines; and 49 CFR Parts 390-397, Motor Carriers.

1.02 SUBMITTALS

A. A minimum of 30 days prior to commencement of blasting operations the Contractor shall provide the Engineer with the bona fide of the airblast specialist to include, but not be limited to past experience, training and education. The acceptability of the specialist is subject to the approval of the Engineer.

B. Operational Blasting Plan

1. Contractor shall submit a blasting plan at least 14 calendar days before drilling operations begin or whenever a change in drilling and blasting procedure is proposed. The acceptance by Engineer of the blasting plan will not relieve the Contractor for his responsibility to produce safe and satisfactory results as set forth by these specifications.

2. The Contractor shall submit to the Engineer four (4) copies of a Blasting Plan for review and acceptance. The Engineer shall have 14 days for review and acceptance after receipt by the Engineer Representative. If the plan is not acceptable, the Contractor shall revise and resubmit the plan. The Engineer shall have 7 days for review and acceptance of the revised plan.

3. No blasting shall be started until the Blasting Plan has been reviewed by the Engineer. Acceptance by the Engineer will not relieve the Contractor of the responsibility for producing safe and satisfactory results.

4. The Blasting Plan shall include as a minimum requirement the following items:

a) Proposed method of transportation, storage, and handling of explosives.

b) Procedure for monitoring the blast operation and handling misfires.

c) Location, size, depth, and spacing of blast holes, type of explosive and method of loading and detonating and maximum number of holes to be detonated per blast, sequence and pattern of delays, if any, and anticipated peak particle velocity and maximum peak positive airblast overpressure at the nearest structure to the blast. Type of blasting machine to be used and when last tested.

d) Type of instrumentation to be used, manufacturer, and when last calibrated and/or certified.

e) List of licenses, permits and/or clearances required when applied for, and dates of approval or anticipated approval by Federal, Commonwealth, and local concerns.

f) A format for maintaining a record of individual blasts throughout the life of the job designed to record pertinent data before, during, and after the blasting operation.

g) Names and qualifications of specialists for vibration control analysis and airblast overpressure measurements. Names and addresses of all certified blasters and users.

h) Plan showing Location of warning signs and signals to be used Method of controlling vessel traffic and communications (if applicable).

i) Name and address of Contractor's representative to which any claims for damage due to blasting should be addressed.

j) A test plan which encompasses the requirements of the test blast program specified below. This plan shall also include the planned test patterns and weights of explosives of each test

blast with anticipated peak particle velocities and peak positive airblast pressures at structures most likely to receive damage from the test blast.

k) The plan shall be signed off by an officer of the company.

PART 2. PRODUCTS

A. All products shall be as specified, indicated in the Construction Drawings and/or as required by Engineer to complete the specified work.

PART 3. EXECUTION

3.01 CONSTRUCTION

3.01.1 STORAGE, HANDLING, AND SECURITY OF EXPLOSIVES

A. The Bureau of Alcohol, Tobacco, and Firearms (ATF) has enforcement, inspection, and investigative jurisdiction in all matters pertaining to explosives. The Contractor shall notify the appropriate office of the ATF in writing with copies to the local law enforcement Authority and the Engineer as to all related facilities, plans and procedures, prior to construction of explosive storage facilities, or receipt of explosives on the site. All transportation, storage, handling, and security of explosives shall be in strict accordance with ATF regulations.

B. Responsibility. The Contractor shall be responsible for obtaining all licenses, permits, and approvals, and the keeping of accounts and records, as well as arranging the transportation and protection of all explosives on the project. Should the Contractor fail to comply with above requirements, the Engineer may order a suspension of that part of work involved until the deficiencies are corrected. The Contractor's attention is also directed to paragraph titled "B. Liabilities" under "3.01.2 Blasting Methods and Procedures" for additional liability that shall be assumed by the Contractor.

C. Personnel. All personnel proposed for involvement with explosives, prior to any such involvement, shall be interviewed, their employee records checked, and their history checked through local police records, for any indication of mental instability, criminal connection, or other factors which might render them a poor security risk. These records shall be made available to the ATF and the Engineer for review. No person with any such risk indication shall be permitted any involvement with explosives, unless individually approved by the Law enforcement authorities.

D. Any storage facilities for explosives shall be constructed, as a minimum, to conform to Type 2 Storage Facilities as specified in Part 55, of Title 27 Code of Federal Regulations which includes requirements for hinges, hasps and the locking system.

E. Fencing. Storage magazines/container conforming to the referenced standards shall be enclosed by a 7-foot chain-link fence, with 3-strand barbed wire overhand mounted on steel arms facing outward at a 45' angle. The fence gate shall be secured at all times when not in actual use by 5-tumbler padlocks protected by 1/4-inch steel caps constructed so as to prevent sawing or Lever action on the locks. The keys to the locks will be of a non-duplicating type and shall be strictly controlled by one approved (1) individual.

F. Lighting. The explosive storage area shall be protected by security lighting installed in a manner that will provide illumination equivalent to normal daylight in the storage area.

G. Security Guard. An approved armed security guard shall be posted at the storage site during all non-operational periods while explosives are stored at the job site. All security safeguards described above shall be implemented by the Contractor.

H. Daily Summary. The Contractor shall keep a daily record of transactions, to be maintained at each storage magazine. The inventory records shall be updated at close of' business each day. Record shall show class and quantities received and issued, and total remaining on hand at end of each day. The remaining stock shall be checked each day, and any discrepancies that would indicate a theft or loss of explosive materials shall be reported immediately.

I. Report of Loss. Should a loss or theft of explosives occur, all circumstances and details of the loss/theft will be immediately reported to the nearest office of' the ATF as well as to the local law enforcement authorities and to the Engineer's Representative.

3.01.2 BLASTING METHODS AND PROCEDURES

A. General. The Contractor's blasting program and methods shall be those necessary to accomplish the excavation shown on the contract drawings in accordance with the procedures specified herein. The Contractor will be required to make necessary plans, examinations, surveys, and test blasts to determine the quantity of explosives that can be fired without damaging property, and to thereafter control the quantity of explosives fired in any one blast to prevent injuries to persons or damage to structures, homes, utilities, vehicles, vessels moored or underway, or any property.

B. Liabilities. The Contractor's is responsible for complying with and obtaining all permits, licenses and complying with all codes, regulations and laws. The Contractor shall assume all liability and hold and save the Authority, its officers, agents, and employees harmless for any and all claims for personal injuries, property damages, or other claims arising out of or in connection with handling of explosives under the contract.

C. The Contractor shall, in addition, process all claims of private citizens arising out of said use of explosives promptly; in particular, all property damage claims shall be acknowledged by the Contractor, or his agent, immediately, and the claimed damage inspected within 30 days following initial notification, and processed to a conclusion (honored, denied, or compromised) within 90 days after cessation of all blasting on the contract; but, in no case shall the claim(s) remain unresolved for a period exceeding 6 months (180 calendar days).

3.01.3 PREPARATION.

A. Public Meeting. The Contractor shall have specialists qualified in vibration and airblast control, available for one day to prepare for and participate in a public meeting, conducted by the Engineer to better inform the public about anticipated drilling and blasting operations to be conducted within the region. The specialist shall be prepared to answer any questions dealing with the magnitude of seismic motion or airblast overpressure excepted and their impact on the public. Should the specialist not be conversational in Spanish, the Contractor shall provide a qualified interpreter.

B. Preblast Survey. The Contractor shall provide one man from his organization and his specialist on vibration control to work as a team with a representative of the Engineer in making a preblast structural survey. A representative sample of structures, approximately 20 percent, as determined by the Contractor, that could receive seismic motion greater than 0.01 p.s.i., will be inspected and their condition documented. Any existing outstanding architectural defects such as broken or fallen plaster or broken windows shall be photographically documented.

3.01.4 BLASTING CONTROL.

A. General. The blasting program and methods shall be those developed by the test blasting program and procedure to accomplish the required excavation.

B. Vibration Control. Where blasting is necessary, the Contractor shall employ a specialist qualified in vibration control method capable of analyzing results obtained from seismograph readings.

The Contractor shall provide a minimum of four seismographs to measure and record ground movements caused by each blast detonated under the contract. The seismograph shall provide real-time, permanent record of the vibration measurements in terms of particle velocity. The record for every shot shall be made available to Engineer for analysis before holes for the next shot are drilled. Seismograph operators shall be qualified personnel capable of setting up instruments at designated locations and efficiently recording the blast. The seismographs shall be placed at locations to include, but not limited to, the nearest buildings, structures, or utilities, and such locations are to be approved by the Engineer.

Blasting shall be controlled in such a manner that the maximum ground vibration level at any structure, which is vulnerable to damage, shall not exceed a zero-to-peak particle velocity of 2.0 inches per second or an energy ratio of 1.0. For historically significant structures in precarious conditions the maximum vibration shall be .2 inches/second and for these structures in sound conditions .5 inches per second. The instrumentation shall record three orthogonal components (vertical, radial, and transverse with respect to the location of the blast) of particle velocity direction (or shall have sufficient resolution of acceleration or displacement such that particle velocity can be readily and accurately determined from the records). The instantaneous vector sum of the three directional components of vibration will be used to compute the maximum vibration level. The record for each blast shall consist of seismograph records identified by instrument number, location of instruments positively identified, date and time and location of blast, amount of explosives used, peak particle velocity and all other data necessary to adequately control blasting operations. A memorandum or telephone report on vibration intensity shall be submitted within 24 hours when specifically requested by the Engineer or without request when such intensity exceeds a peak particle velocity of 75% of the maximum vibration allowed (as indicated herein). The Contractor shall submit a copy of the record in tabular form for each blast on a semimonthly basis.

C. Airblast Control. Where blasting is necessary, the Contractor shall employ a specialist qualified in making airblast overpressure measurements on selected detonations, analyzing the results obtained and making airblast predictions for succeeding detonations.

The maximum peak positive airblast overpressure at structures, vehicles, vessels moored or underway, with glass windows shall not exceed 0.02 p.s.i. Blasting operations shall not be

conducted from 1 hour before sunset to 2 hours after sunrise or when a temperature inversion or heavy low-level cloud cover exists. The peak positive airblast overpressure as developed by the Test Blast Program shall be accurately measured (within +10 percent) at three or more locations and to peak overpressure levels at or below 0.01 p.s.i. The airblast overpressure from the test events should be monitored at ranges extending from the range of the closest structure to any planned detonation outward of an overpressure level of 0.01 p.s.i. or over a range from 500 to 3,000 feet, whichever is greater. Results from the initial monitoring of the Test Blast Program shall be used to predict airblast overpressures for succeeding events and to insure peak positive overpressures do not exceed 0.02 p.s.i. at the closest structure or vessel moored or underway. One copy of the airblast records from each test blast identified, date and time and location of blast, amount of explosives used, peak positive overpressure shown, and all prediction curves necessary to adequately control blasting operations shall be furnished the Engineer at the completion of the initial test blasts.

D. Test Blast Program

1. A test blast program shall be conducted by the Contractor consisting of 10 individual test blasts. The purpose of the test program is to allow the Contractor to establish safe limits of vibration and airblast overpressure. The test blast program shall be conducted and reported in strict accordance with procedures outlined in the sections of this clause covering vibration control and airblast control.

2. Upon evidence of any damage to test structures, test blasting shall cease until the Engineer has been notified, and adjustments made. The test events shall begin with a small number of charges and extend upward to the maximum yield to be used. The final test event shall simulate as close as practicable to the explosive charge type, size, overlying water depth, charge configuration, charge separation, initiation methods, and emplacement conditions anticipated for the largest detonations. One copy of the record for the first 10 blasts shall be submitted in tabular form to the Engineer daily.

3. After the 10 series test blasts, the Contractor shall examine the representative structures of the preblast survey as previously specified. All new damage resulting from the test blasting shall be reported in detail to the Engineer, including photographs.

4. At the conclusion of the blast program, the Contractor shall examine all reports, surveys, test data, and other pertinent information and conclusions reached shall be the basis for developing a completely engineered procedure for blasting. The procedure shall include sketches showing blasting patterns, weights of explosives, wiring, and charge emplacement. Four copies of the developed procedure shall be submitted for review to the Engineer, and upon completion of the review and acceptance, it shall be appended to and become a part of the aforementioned operational blasting plan. A maximum period of 7 calendar days will be required for review and acceptance by the Engineer of the proposed procedure after receipt in the Engineer's office. Such review period shall not be the basis for a claim against the Authority for delay. In no event shall operational blasting proceed until the review of the developed procedure for blasting has been completed. If the procedure is not acceptable, the Contractor should revise and resubmit the procedure. The Engineer should have 5 days for review and acceptance of the raised procedure.

E. Where a Drill Boat or Barge is Used.

Where a drill boat or barge is used the following shall apply:

1. Provisions shall be made for jettisoning explosives overboard in emergencies.

2. No high explosives shall be stored on the boat or barge deck in the open except for the one case that is to be loaded immediately into the bore holes. Any explosives remaining on deck shall be returned to the day magazine prior to the firing of any blast.

3. The firing line reel or spool shall be mounted on the rig in a manner that it cannot be lost overboard. An approved blasting machine shall be used for detonation regardless of the number of caps used.

3.01.5 SAFETY EQUIPMENT

A. Lightning-Detection Equipment. The Contractor shall furnish, maintain, and operate lightning-detection equipment during the entire period of blasting operations and/or during the periods that explosives are stored at the site. The equipment shall be similar and equal to the Litton TSM/C Thunderstorm Monitor and Lightning Warning Instrument, as manufactured by Litton Industries, Inc., Environmental Systems Division, Camarillo, California. The equipment shall be installed where approved by the Contracting Officer. When the lightning-detection device indicates a blasting hazard potential, personnel shall be evacuated from all areas where explosives are present.

B. Stray Ground Currents. Prior to blasting, a test shall be made for stray ground currents. The Contractor shall furnish both AC and DC voltmeters capable of reading 0.05 volts and shall employ the proper techniques in conducting the tests. Electrical blasting operations shall not be carried out when the maximum reading by the AC and DC voltmeters exceeds 0.05 ampere. The Contractor shall take all precautions outlined under "Stray Current," contained on ETI Blasters Handbook (latest edition), to prevent premature detonation from stray ground currents. Information on this Handbook may be found in the following internet address: http://www.isee.org/

SECTION 02A050
EXCAVATION, FILL/EMBANKMENT AND BACKFILL

PART 1. GENERAL

1.01 SUMMARY

1.01.1 SECTION INCLUDES

This sections includes all excavation, backfilling and fill/embankment, selected earth, sand and gravel necessary for the execution of the work including structures, and trench excavation, excluding trench excavation for sewer pipe and trench excavation for pressure water pipe. Excavation for concrete work for pipe protection is also included under this section.

1.01.2 DEFINITIONS

A. Topsoil. By topsoil is meant that thickness of soil from the existing unaltered ground surface, where vegetation grows, down to the depth where the last piece of root is encountered. When soft, expansive and/or organic subsoil is present, then all such subsoil shall be considered as topsoil for stripping purposes, unless otherwise indicated.

B. Proff Roll. Proof rolling shall consist of applying test loads over the ground surface by means of a heavy pneumatic-tired roller to locate and permit the correction of deficiencies likely to adversely affect the performance of the pavement structure.

C. Geotechnical Engineer. Licenced Geotechnical Engineer (specialist in the field of soils mechanics and foundation engineering) furnished by Contractor who shall provide the services required by this Section.

D. Borrow. Borrow shall consist of the material required for the construction of embankments, replacement of unsuitable materials, or for use in other portions of the work, in excess of the quantity of suitable materials available from the required grading, cuts and excavations. Unless otherwise provided in the contract, the Contractor shall make his own arrangements for obtaining all required borrow material and shall pay all costs involved.

1.01.3 SUBMITTALS AND APPROVALS

A. Permits. The Contractor shall obtain and file with the Engineer all applicable permits including those from the “Centro de Coordinación de Excavaciones y Demoliciones (CCED)” of the Public Service Commission”, State Public Works Department, Department of Natural Resources, U.S. Corps of Engineers, municipal government, or any other agency having jurisdiction, before starting any work, and shall comply with all requirements, stated on said permits. All charges incidental to these permits shall be at the Contractor's expense.

B. Prior to fill operations the site of fill and the site of borrow shall be inspected and approved by the Engineer.

C. Testing. Contractor shall furnish testing services by an approved testing laboratory. Submit to Engineer for approval the laboratory that will do the tests required by this Section. Copies of all laboratory and field test reports shall delivered to Engineer within 24 hours of the completion of the test.

D. Geotechnical Engineer. Submitt for approval the qualifications of the Goethecnical Engineer to perform the services required by this Section.

E. The Contractor shall file with the Engineer, a written certificate from the Department of Transportation and Public Works, the municipal government, or any other agency having jurisdiction, stating their approval of the work performed in the repair of streets and roads, before the final inspection and acceptance of the work.

1.02 WARRANTY

The Contractor shall guarantee his work, including the restoring of streets, and road surfaces for a period of one (1) year after the date of the Engineer's final inspection and acceptance.

Failure on the part of the Contractor to make good, any improper or defective work under this specification, shall give PRASA the right to call on other parties to correct defects or to make necessary repairs of damages at the expense of the Contractor, and such expenses so incurred shall be deducted from the money due the Contractor under the provisions of the Contract attached hereto. If there is no money due the Contractor, the expense may be recovered from either the Contractor or the Bonding Company by means PRASA may consider proper.

PART 2. <u>PRODUCTS</u>

A. Soil classifications are as per ASTM D2487 “Standard Classification of Soils for Engineering Purposes (Unified Soil Classification System)”.

PART 3. <u>EXECUTION</u>

A. Contractor shall make all excavation and backfilling necessary for the construction of the work, including excavation for structures. This work includes the necessary backfilling, grading, shoring and sheet piling, and any other excavation which may be ordered by the Engineer. Excavation for concrete work for pipe protection is also included under this section.

B. Proff Rolling. Proff rolling shall be done where required by this Section. The proof roller shall consist of a chariot type rigid steel frame with a box body suitable for ballast loading up to 50 tons gross weight, and mounted on four (4) pneumatic tired wheels acting in a single line across the width of the roller on its transverse load center line. The wheels shall be equipped with l8.00 x 24 or 18.00 x 25, 24-ply tires, and shall be suspended on articulated axles such that all wheels carry approximately equal loads when operating over uneven surfaces.

The initial load on the proff roll shall be determined by the Geotechnical Engineer furnished by Contractor. Two (2) complete passes of the roller shall be applied over all elements of the area to be proof-rolled. Any depression or other deficiency shall be corrected as directed by the Geotechnical Engineer and approved by Engineer.

Proof rolling of shall not be used where the proof roller will approach a culvert, pipe or other conduit closer than 1.5M in any direction and when due to restrictions in available access and/or maneuvering space, use of the proof roller may damage adjacent work. Proof rolling will not be performed in rock cuts nor within 4.5 meters of any bridge abutment or retaining wall

C. Excavation

1. **No Classification.** The excavation shall include sand, earth, hard pan, loose or rotten rock and any other material which might be encountered, except rock. Rock excavation shall be as defined in Section 02A015. Rock encountered during construction as defined in Section 02A015 shall be paid from the unit price item included in the proposal form only as rock excavation. Demolished rock shall be paid as indicated in Section 02A015. Payment as unclassified excavation for rock shall not apply.

2. **Clearing of Site.** The site of all excavation shall first be cleared and grubbed of all trees, stumps, brush and rubbish, which shall be removed or disposed of in a manner satisfactory to the Engineer. Top soil and earth shall be carefully stripped from the rock surfaces preliminary to the excavation of the latter and placed in temporary banks for subsequent use in backfilling; this work shall be done by the Contractor at no extra cost.

3. Excavation shall be performed to the lines given by Engineer, and no excavation outside said lines would be paid for.

4. A satisfactory balance between earthmoving equipment and soil compaction equipment shall be present at all times. Compaction equipment shall be capable of compacting each lift of the material to the specified density and it must be permanently working at the site. The right is reserved for the Engineer to order the use of any particular compacting unit discontinued if it is not capable of compacting the material to the required density in a reasonable time.

5. A steel roller from eight (8) to ten (10) ton weight should be used for sealing of working surfaces in protection against ponding of surface water during rain showers. Earthmoving equipment must not be considered, under any circumstances, as compaction equipment, but its operation shall be distributed to avoid rutting and unequal compaction by its movement throughout the site.

6. Whenever excavation is carried beyond or below the lines and grades given by the Engineer, the Contractor shall, at his expense, refill such excavated spaces with such material and in such a manner as directed by the Geotechnical Engineer in order to insure stability of the various structures.

7. Beneath the concrete structures, wall footings and foundations, the refilling of excavated spaces without authorization or below the lines shown, shall be done as directed by the Geotechnical Engineer and approved by Engineer at the Contractor's expense.

8. **Structure Within Cut Areas.** Cut zones under structure shall be proof-rolled and inspected by the Engineer. All soft or otherwise objectionable superficial soils shall be removed and replaced with properly compacted fill.

D. Backfill

1. Backfilling shall not be done until all items required are laid or constructed in the excavation has been finished, inspected and approved by the Engineer.

2. Where backfilling on the two sides of a wall is shown in the Construction Drawings or required by the Engineer, it shall be done simultaneously on both sides.

3. If excavated material is not sufficient or appropriate for backfill, the Contractor shall furnish the necessary material from another source at no extra cost to PRASA.

4. Special care shall be taken by the Contractor in backfilling and tamping with mechanical equipment such as bulldozers, rollers, etc., near structures. The use of such equipment shall be limited to such a distance from the structure, as to avoid the application of extra surcharge forces upon them. Backfill in these cases shall be done with power operated tampers. Filling of excavation shall not be done until the work constructed in the excavation have been inspected and approved by the Engineer.

E. Borrow, Fill/Embanckment, and Backfill Material.

F. The Contractor shall submit to the Authority a written report by a licenced Geotechnical Engineer(specialist in the field of soils mechanics and foundation engineering) certifying that the proposed borrow, fill and backfill material meets all requirements for the intended use and the requirements of this specification.

If Contractor intends to use a material for borrow, fill or backfill which is not indicated in this specification, he shall submit a request to Engineer with a signed report from the Geotechnical Engineer certifying that the proposed material meets all requirements for the intended use. Contractor shall not use the material unless a written approval is obtained form Engineer.

The written report prepared by the Geotechnical Engineer must be based on tests made for liquid and plastic limits, sieve analysis, maximum density at optimum moisture, shearing strength, expansive qualities and other appropriate considerations. Potential volume change tests shall accompany field density test results as required by field conditions. Proctor Curve for use in control of fill compaction shall include swell characteristics obtained by Potential Volume change tests or other approved methods.

G. The material for borrow, fill/embankment and backfill shall be classified classified by ASTM D2487 GW, GP, GM, GP-GM, GW-GM, GC, GP-GC, SW, SP. Following AASHTO Clasification the material shall be classified as A2-5 or better. For structures, the material shall be A2-4 or better.

Beneath the ground water level Contractor shall use soil, class GW or GP, per ASTM D2321, or crushed stone with 2 inch maximum size and not having more than 5% passing the 200 sieve. Crushe Stone shall be as indicated in ASTM C33 “Standard Specification for Concrete Aggregates” Gradation NO. 67.

H. Selected Earth, Gravel and Sand.

The Contractor shall furnish and place selected earth, sand, gravel or crushed stone where called for in the Construction Drawings, and at such locations as the Engineer may direct.

1. Selected earth shall be suitable earth taken from excavations at the site of the work which are indicated in the Construction Drawings. The Geotechnical Engineer with approval from Engineer may indicate material in the Work that can be used as Selected Earth. The material shall not contain sod, tree stumps, brush, logs, perishable or other organic or deleterious matter.

2. Gravel or Crushed Stone. Either graded gravel or graded crushed stone shall be used for foundations when so ordered by the Engineer. Gravel used for backfill may be run-of-bank if ordered or approved by the Engineer. Both gravel and crushed stone shall conform the applicable requirements of the American Standard For Test of Materials (ASTM C33).

Gravel and crashed stone shall be clean consisting of hard, tough and durable uncoated rock free from injurious amounts of soft, friable, thin, elongated or laminated pieces, organic or other deleterious matter. Gravel and crushed stone shall conform to the limits for deleterious substances and physical properties for class 1N as per ASTM C33.

The gravel or crushed stone shall be graded conforming to ASTM C33 class 67, which requires the following grading:

Nominal Size Square Openings	Percent by weight passing individual sieves 1-1/2 in. to No. 4
2”	100%
1½”	95-100%
¾”	35-70%
3/8 ”	10-30%
No. 4	0-5%

In Special portions of the foundation backfill, the use of larger or smaller aggregate of satisfactory grading may be ordered by the Engineer.

3. Sand. Sand used in backfill shall be clean, natural and consisting of hard, dense, strong, durable and uncoated particles. It shall consist of natural sand manufactured sand or a combination thereof. It shall be free from injurious amounts of dust, lumps, soft or flaky material, shale, mica, loam, organic matter and other deleterious substance. Sand shall be graded within the following limits:

Sieve	Percent Passing
3/8 in.	100
No. 4	95 to 100
No. 8	80 to 100
No. 16	50 to 85
No. 30	25 to 60
No. 50	10 to 30

No. 100	2 to 10

Sand shall have not more than 45% passing any sieve and retained on the next consecutive sieve of those shown in the table above and its fineness modulus shall not be less than 2.3 nor more than 3.1.

I. Construction of Embankment.

1. Whenever the plans and contract documents call for the use of special devices such as alignment stakes, inclinometers, piezometers, settlement gages and/or observation wells to control the construction of embankments over soft or unstable soils, the method and rate of construction of such embankment shall be as indicated in the plans or as directed by the Engineer.

2. If an embankment can be deposited on one side only of a structure (foundation, wall, etc.) care shall be taken that the area immediately adjacent to the structure is not compacted to the extent that it will cause overturning of or excessive pressure against the structure. When embankment is to be placed on both sides of a concrete wall or box type structure, operations shall be so conducted that the embankment is always at approximately the same elevation on both sides of the structure.

3. Protection of Embankment. During the construction of the embankment it shall be maintained in such condition that it will be drained at all times. Side ditches or gutters emptying from cuts to embankments or otherwise shall be constructed as to avoid damage to embankment by erosion. In addition, at the close of each day's work, smooth steel wheel or pneumatic tired rollers shall be used to roll the entire working area after it has been crowned, sloped and drained. All material eroded or otherwise removed form the embankments shall be replaced by the Contractors at no extra cost to PRASA.

4. Shrinkage and Settlement. Contractor shall construct all embankments so that after shrinkage and settlement and at the time of acceptance of the project, they shall have the required grade, width, and cross section at all points. The Contractor shall be responsible for the stability of all embankments made under the contract until final acceptance of the work and shall bear the expense of replacing any portions which have become unstable due to carelessness or negligent work on the part of the Contractor.

J. Fill Control for Fill/Embankment and Backfill

1. Temporary Banks. All reusable topsoil shall be stored in stock-piles, the location of which shall be as shown in the Construction Drawings or as recommended by Contractor and approved by Engineer.

2. Fill. No filling is to be undertaken unless and until the topsoil, as described above, has been thoroughly stripped. Subsequent to stripping the natural ground surface shall be proof rolled with a heavy roller to detect soft spots which shall be removed. Fill Material shall be free from stumps, trees, roots, sod, muck or any other material detrimental for the construction intended. Prior to fill operations the site of fill and borrow shall be inspected and approve by the Engineer.

3. Benching. When fill/embankment is to be made and compacted against hillsides or existing fill, the slopes of original hillsides and old or new fills shall be horizontally benched to key the fill

material to the underlying ground. A minimum of 2 feet normal to the slope of the original hillside and old or new fill shall be removed and recompacted, as the fill is brought up in layers, to ensure that the new work is constructed on a firm foundation free of loose or disturbed material. For the purpuse of this paragraph, fill slopes or hillsides shall be defined as steeper than 1 vertical in 4 horizontal.

4. **Placement of Fill/Embankment.** Fill material shall be deposited in horizontal layers of such thickness as required by the nature of the soil, but not to exceed 20 centimeters (8 inches), bladed to an even surface, and compacted to a dry density of not less than that shown below: As the compaction of each layer progresses, continuous leveling and manipulating shall be performed to assure uniform density. Each layer shall be compacted to the specified density prior to placing subsequent layers until finished grade or subgrade is obtained. The minimum density requirements are as follows:

   Under pavements, shoulders and structures - 95% of maximum density using the Modified Proctor Maximum Density (ASTM D1557).

   Other areas - 90% of optimum maximum using the Modified Proctor Maximum Density (ASTM D1557).

   Pipes and conduits - as required by Section titled Trench Excavation for Pipe.

   These minimum percent compactions should be attained while within the moisture content range shown on the compaction curve.

5. **Optimum Moisture.** When fill material contains moisture above that of the optimum moisture the fill shall be placed in thinner layers and compaction should wait until atmospheric conditions and scarifying lower moisture to within the compaction curve's moisture range. The site to be filled shall be divided into different areas where drying/waiting periods can be provided prior to compaction, and earthmoving equipment should not out-number the quantity needed for effective drying of wet fill. If the fill material has a moisture lower than optimum it should be sprinkled and windrowed so that adequate percent compaction is obtained in the field.

6. **Stones in Fill.** No stones over 10 centimeters (4 inches) in diameter shall be placed within future structure construction. Stones in earth-fill shall be well distributed outside building areas, and none shall be left within top 30.5 centimeters (12 inches) of final subgrade, unless expressly permitted in writing by the Geotechnical Engineer who recommended the fill for the Work as indicated in this section under Submittals..

7. **Slopes on Fill.** Slopes on fill shall not be steeper than 2.0 horizontal units to 1.0 vertical units. Drainage other than storm water falling directly to slope shall not be permitted to cut across slope areas. Protection of slopes by planting of grass and shrubs on them shall be performed immediately upon their completion.

K. Trenching and Backfilling Trenches. Trench excavation and backfill shall be required by the manufacturer of the item to be installed in the trench. If no specific manufacturer recommendation is available, trench excavation and backfill shall be as as required in Section titled TRENCH EXCAVATION FOR PIPE with the following differences:

a) Bedding, haunching and backfill for conduits shall be as specified in the referenced Section for the material of the conduit following the requirements in the referenced Section for gravity sewer pipe.

b) Bedding and backfill for all other trenches shall be as required by the Construction Drawings. If it is not specefied therein then bedding and backfill shal be as required in this section for backfill for structures and as required by Engineer.

L. Blasting. The Contractor shall obtain all permits and observe all rules and regulations of Authorities having jurisdiction relative to the handling, storing and use of explosives, and shall exercise every care in his blasting operations to protect life and property. The hours of blasting shall be fixed by the-Engineer. Any damage caused by blasting shall be repaired by the Contractor at his expense.

The section titled BLASTING contain additional specifications regarding this work.

M. Dewatering. The Contractor shall provide suitable equipment to remove and properly dispose of all water promptly from all excavations and building structures therein during the period of excavation, and keep them dry until the construction of structures to be built thereon is completed, and after the concrete is sufficiently set to allow water to come upon them.

1. All water encountered on excavation works shall be disposed by the Contractor in such manner as will not damage public or private property or create a nuisance or health menace. The Contractor shall furnish, install and operate pumps, pipes, appliances and equipment of sufficient capacity to keep all excavations and accesses free from water until backfilling work is done, unless otherwise authorized by Engineer. If approved by regulating agencies, water if odorless and stable may be discharged into an existing storm drain, channel or street gutter unless desilting the water is necessary. In such case the Contractor shall provide all means necessary for the remotion of the silt. All dewatering works shall be executed in accordance with the requirements of the Environmental Quality Board, Corps of Engineers and all concerned agencies.

N. Demolition and Restoration.

1. Where existing streets, roads or highways are paved or where sidewalks, driveways or other special surfacing is encountered within the limits of the work, such pavement or surfacing shall be removed to the extent necessary for the work or as indicated on the plans and no separate amount will be paid therefor. Contractor shall perform the demolition and replacement of existing pavement as specified in the section titled “Demolition and Replacement of Pavement.

In excavation of trenches the Contractor shall cut bituminous pavement on a straight line so that the width of the pavement opening will not be greater than the width of the excavated trench. Pavement shall be line cut with proper tools prior to excavating the trench.

If the Contractor should remove more pavement than that specified; or makes removal necessary by reason of damage to pavement for which he is responsible; or, if by reason of such excess removal or damage, only a narrow strip of undamaged paving remains which must be removed; the Contractor shall replace the excess pavement removed at his own cost and expense. All excess material shall be promptly removed to such points as the Engineer may direct.

2. **Restoration to Original Conditions.** The Contractor shall restore all walks, green areas, roads shoulders, curbs, gutters, swales, entrances to public and private premises, and any other structure to their original conditions. Roads and streets shall be restored in accordance with the section titled “Demolition and Replacement of Pavement”. Restoration shall be performed as indicated on section titled "Environmental Protection and Restoration” of the General Conditions. Backfilling, as well as paving material other than concrete, shall be thoroughly tamped and rolled with suitable tools and equipment for the proper execution of the work, as directed by Engineer. The Contractor shall start the repair of street and road pavement not later than 5 working days after the pipeline, conduit or any other work itme indicated in the Construction Drawings has been installed and the excavation backfilled. Failure on the part of the Contractor to start the repair of streets or roads pavement at the time specified, shall give the Engineer Authority to call on other parties, or to perform the repair of streets or roads pavement at the expense of the Contractor; or to retain the monthly payment until this, or any other requirements of the Contract is fulfilled. The Contractor shall start the restoration on cross-country work not later than 10 working days after the excavation has been backfilled.

3. Failure on the part of the Contractor to start the repair of streets or roads pavement at the time specified, shall give the Engineer authority to call on other parties, or to perform the repair of streets or roads pavement at the expense of the Contractor, or to retain the monthly payment until this, or any other requirements of the contract is fulfilled.

O. Excavated Material. The material excavated shall be laid compactly on the sides of the excavation or disposed off as specified hereinafter so as not to interfere, as possible, with the execution of the work under this contract and to be of as little inconvenience as possible to the traveling public. Gutters shall not be obstructed, and all proper measures shall be provided to allow the free passage of surface water.

All surplus excavated material, including perishable material, which remains after excavation have been properly backfilled, shall be removed properly from the site of the work at no extra cost to the Authority, unless directed by the Engineer to dispose of same within the limits of the project's site or rights-of-way.

P. Protection.

1. **Against Accidents.** The Contractor shall erect and maintain, at his own expense, suitable barriers around excavations, whenever necessary or as directed by the Engineer, so as to prevent accidents to the public or to workmen, and shall place and maintain a sufficient number of red lights on the work from sunset to sunrise. The regulations of the Puerto Rico Department of Transportation and Public Works, the regulations of the Occupational Safety and Health Office, and all applicable federal and local laws and regulations shall be observed.

2. **Protection of Existing Structures.** Special precautions shall be taken to insure the safety of water mains, gas mains, electric conduits, telephone conduits, sewers, storm water drains, culverts, buildings and other existing structures in and near the excavations. The Contractor is solely responsible for all damage caused and shall repair at his own expense all damage resulting from his operations.

Q. Specifications for Slope Control Planting

1. Embankment fills with slopes steeper than 1.5:1 (H:V) shall be protected from runoff and erosion by an appropriate type of vegetation cover. This may be performed by hydromulching in such a way as cover the soil as fast as possible until evidence of "catch" or uniform stand to prevent erosion is achieved, at which time acceptance will be given. The Contractor shall properly water, mow, and otherwise maintain all treated areas until final acceptance.

2. Damage resulting from erosion, gulleys, washouts or other causes shall be repaired by refilling, tamping and resoding, reseeding or replacing.

3.02 FIELD QUALITY CONTROL

3.02.1 TESTS

A. Testing. Testing shall be the responsibility of the Contractor and shall be performed at no additional cost to PRASA. Testing shall be performed by an approved testing laboratory. Copies of all laboratory and field test reports shall delivered to Engineer within 24 hours of the completion of the test.

B. Optimum Moisture and Laboratory Maximum Density. The standard proctor test ASTM D698 or the modified test ASTM D1557, as specified, shall be made for each type of material or source of material, including borrow material to determine the optimum moisture and laboratory maximum density values. The tests shall be repeated as ordered by Engineer, or when any change in material occurs which may affect the optimum moisture content or laboratory maximum density.

C. Density Tests

1. On Trench Backfill. In place density tests shall be made following ASTM D1556, ASTM D2167 or ASTM D2922 at intervals no more than 50 meters apart. The Engineer shall have the Authority to requests test be performed at closer intervals if he believe it is necessary due to field conditions. If ASTM D2922 is used it shall be calibrated as stated in ASTM D2922 and the moisture content shall be determined accordingly.

2. On Backfill for Structures. In place density tests shall be made following ASTM D1556, ASTM D2167 or ASTM D2922 at intervals indicated by Engineer. The Engineer shall have the Authority to requests test be performed at closer intervals if he believe it is necessary due to field conditions. If ASTM D2922 is used it shall be calibrated as stated in ASTM D2922 and the moisture content shall be determined accordingly.

3. Compacted Fills. The in-place dry density of the compacted fill shall be performed by methods specified under ASTM D1556 or D2922 (nuclear gauge). At least one in-place moisture density determination shall be made for each 250 $ft.^2$ of area to be filled. At least one laboratory compaction curve shall be performed for each distinctive type of material to be used in the fill.

D. Moisture Content. In the stockpile, excavation or barrow areas, a minimum of two tests per day per type of material or source of materials being places is required during stable weather conditions.

During unstable weather, tests shall be made as dictated by local conditions. Moisture content shall be tested in accordance with ASTM D2216.

E. Gravel and Sand. One test per source for gravel and sand. Test must show conformance with requirements in this Section.

SECTION 02A092
TRENCH EXCAVATION FOR PIPE

PART 1. GENERAL

1.01 SUMMARY

1.01.1 SECTION INCLUDES

This section includes the excavation of all trenches for laying pipeline including all other necessary excavation for the proper execution of the work, all backfilling and all other necessary work as hereinafter specified.

1.02 DEFINITION

A. Pipe embedment includes pipe bedding, haunching and initial backfill.

B. Granular soils are soils in which 100%, by dry mass, of soil particles pass a 3 in. sieve. These soils may contain up to 15%, by dry mass, of soil particles passing a No. 200 sieve, provided they still have cohesionless, free-draining characteristics.

C. Geotechnical Engineer. Licensed Geotechnical Engineer(specialist in the field of soils mechanics and foundation engineering) furnished by Contractor who shall provide the services required by this Section.

1.03 PAYMENT

A. Payment for work in this section is part of the lump sum item 1 of the Proposal.

1.04 SUBMITTALS AND APPROVALS

A. Permits. The Contractor shall obtain and file with the Engineer all applicable permits including those from the "Centro de Coordinación de Excavaciones y Demoliciones (CCED)" of the Public Service Commission, State Public Works Department, Highway and Transportation Authority, Department of Natural Resources, U.S. Corps of Engineers, municipal government, or any other agency having jurisdiction, before starting any work, and shall comply with all requirements, stated on said permits. All charges incidental to these permits shall be at the Contractor's expense.

B. Prior to fill operations the site of fill and borrow shall be inspected and approved by the Engineer.

C. Material for Pipe Embedment, Fill and Backfill. The Contractor shall submit to the Authority a written report by a Geotechnical engineer certifying that the proposed pipe embedment, fill and backfill material meets all requirements for the intended use and the requirements of this specification.

If Contractor intends to use an embedment, fill or backfill material which is not indicated in this specification, he shall submit a request to Engineer with a signed report from the Geotechnical

Engineer certifying that the proposed fill material meets all requirements for the intended use. Contractor shall not use the material unless a written approval is obtained form Engineer.

The written report prepared by the soils engineer must be based on tests made for liquid and plastic limits, sieve analysis, maximum density at optimum moisture, shearing strength, expansive qualities and other appropriate considerations. Potential volume change tests shall accompany field density test results as required by field conditions. Proctor Curve for use in control of fill compaction shall include swell characteristics obtained by Potential Volume change tests or other approved methods.

D. Testing. Testing shall be performed by an approved testing laboratory. Copies of all laboratory and field test reports shall delivered to Engineer within 24 hours of the completion of the test.

E. The Contractor shall file with the Engineer, a written certificate from the Department of Transportation and Public Works, Highway and Transportation Authority, the municipal government, or any other agency having jurisdiction, stating their approval of the work performed in the repair of streets and roads, before the final inspection and acceptance of the work.

1.05 WARRANTY

The Contractor shall guarantee his work, including the restoring of streets, and road surfaces for a period of one (1) year after the date of the Engineer's final inspection and acceptance.

Failure on the part of the Contractor to make good, any improper or defective work under this specification, shall give PRASA the right to call on other parties to correct defects or to make necessary repairs of damages at the expense of the Contractor, and such expenses so incurred shall be deducted from the money due the Contractor under the provisions of the Contract attached hereto. If there is no money due the Contractor, the expense may be recovered from either the Contractor or the Bonding Company by means PRASA may consider proper.

PART 2. <u>PRODUCTS</u>

A. Embedment Materials. Embedment materials listed herein include a number of processed materials plus the soil classification listed under the Unified Soil Classification System (USCS) (Method D-2487). These materials are grouped into five broad categories according to their suitability for embedment, fill and backfill according to Table 1 in ASTM D2321.

1. Class I-Angular, 6 to 40-mm (1/4 to 1 ½ in), graded stone, including a number of fill materials. It is a nonplastic material with 100% passing sieve 1 1/2", <50% passing sieve No. 4, and <5% passing sieve 200.

2. Class II-Coarse sands and gravel with maximum particle site of 40-mm (1 ½ in.), including variously graded sands and gravel containing small percentages of fines, generally granular and non-cohesive, either wet or dry. Soil Types GW, GP, SW and SP are included in this class. 100% pass sieve 1 1/2", <5% pass sieve 200.

3. Class III-Fine sand and clayey gravel, including fine sands, sand-clay mixtures, and gravel clay mixtures. Soil Types GM, GC, SM and SC are included in this class. 100% pass sieve 1 1/2", 12 to 15% pass sieve 200.

4. Class IV-Silt, to silty clay, and clays, including inorganic clays and silts of medium to high plasticity and liquid limits. Soil Types MH, ML, CH and CL are included in this class. These materials are not recommended for bedding, haunching or initial backfill.

5. Class V-This class includes the organic soils OL, OH and PT as well as soils containing debris, rocks larger than 40-mm (1 ½ in.) in diameter and other foreign materials. These materials are not recommended for bedding, haunching or initial backfill.

PART 3. EXECUTION

3.01 CONSTRUCTION

A. The Contractor shall excavate all trenches and perform all other necessary excavation for the proper execution of the work, and do all foundation, bedding, haunching, backfilling and all other necessary work as hereinafter specified.

B. Trench excavation shall be performed according to the following documents:

1. Ductile-Iron Water Pipe shall conform to the latest version of Standard AWWA C600.

2. Polyvinyl Chloride (PVC) water pipe installation shall conform to the latest version of Standard AWWA C605.

3. Pipe installation for PVC pressure pipe 6" nominal diameter or smaller shall conform to ASTM D2774 "Standard Practice for Underground Installation of Thermoplastic Pressure Piping".

4. Buried Polyvinyl Chloride (PVC) pipe used in sewers and other gravity flow applications shall conform to ASTM D2321 "Underground Installation of Thermoplastic Pipe for Sewers and Other Gravity-Flow Applications".

5. Concrete pressure pipe shall conform to AWWA Manual M9 "Concrete Pressure Pipe".

The Engineer shall decide discrepancies, if any, between this specification and the documents referenced above.

C. No Classification. The excavation shall include sand, earth, hard pan, loose or rotten rock and any other material which might be encountered, except rock. Rock excavation shall be as defined in Section 02A015. Rock encountered during construction as defined in Section 02A015 shall be paid from the unit price item included in the proposal form only as rock excavation. Demolished rock shall be paid as indicated in Section 02A015. Payment as unclassified excavation for rock shall not apply.

D. Protection of Existing Structures. Special precautions shall be taken to insure the safety of water mains, gas mains, electric conduits, telephone conduits, sever, storm water drains, culverts, buildings and other existing structures in and near the excavations. The Contractor is solely responsible for all damage caused and shall repair at his own expense all damage resulting from his operations.

E. Interference with Water and Other Utility Facilities. The Contractor shall cooperate with the municipality, PRASA and other utility authorities by giving proper notices, securing necessary approvals and authorizations, and by so prosecuting his work that no interference with services will occur.

F. Street Crossings. At all street crossings and at such other points as the Engineer may direct, the trenches shall be bridged in a secure manner so as to prevent any serious interruption of travel upon the roadway or sidewalks and also so as to afford necessary access to public and private premises. The material used and mode of construction for said bridges, shall be satisfactory to the Engineer.

G. The entrance to fire engine houses must not be obstructed and all fire hydrants shall be left uncovered and readily accessible.

H. Protection Against Accidents. The Contractor shall erect and maintain suitab1e barriers around all excavation so as to prevent accidents to the public or to workers, and shall place and maintain a sufficient number of red lights on the work from sunset to sunrise.

I. Trench Construction.

1. Trench excavation and backfill for all pipe shall be as recommended by the manufacturer of the pipe to be installed. Any discrepancy between these recommendations and this Section shall be decided by Engineer.

2. In excavating trenches, the Contractor may use such methods as the Engineer may approve. Where the use of trenching machines is permitted, he shall, before starting work, obtain all available information as to the location of existing underground structures, and shall plainly mark their location in advance of the excavation.

   The Engineer shall have the right at any time to order the discontinuance of the use of trenching machines, travelers or cableways if he decides that their use is unnecessarily and injuriously obstructing traffic, or damaging property, or is not for the best interest of those or whom the work is being performed.

   No tunneling will be allowed unless by written permission from the Engineer.

3. The trench shall be excavated along the line designated by the Engineer and to the depth necessary to lay the pipe at the specified grade. The trench shall be excavated to conform as nearly as possible to shape of the lower half of the pipe, with shallow cut to rest the bell of the joints, and to provide a uniform support for the entire length of the pipe.

4. **Sheating, Shoring and Sheet Piling**. The sides of the trenches shall be kept vertical, by bracing, sheating, shoring or sheet piling, if necessary. No allowance for sheet piling or sheating left in place will be made. Unless otherwise directed by the engineer, sheeting driven into or below the pipe zone should be left in place to preclude loss of support of foundation and embedment materials. When left in place, the sheating or sheet piling shall be cut off 1.5 ft (46 cm.) or more above the crown of the pipe and 12 inches (30 cm.) below the surface, or as indicated by Engineer.

5. **Length of Trench Remaining Open**. The length of trench excavated ahead of the pipe laying, and the length of trench which may remain open at any one time, shall be subject to the approval of the Engineer. It shall at no time be greater than can properly be protected from caving, or to prevent accidents. Trenches left opened at night shall be properly guarded in accordance with the General Conditions for security during construction as required by Department of Transportation and Public Works.

6. **Excavated Materials**. The material excavated shall be laid compactly on the side of the trench so as to be of as little inconvenience as possible to the traveling public. Gutters shall not be obstructed and all proper measures shall be provided to allow the free passages or surface water.

7. **Dewatering**. Trenches shall be kept free from water by pumping or other acceptable method, as no pipe or masonry shall be laid in water. The Contractor shall use one of the following methods subject to the approval by the Engineer:

   a) Remove the water with trenchside pumps through the use of Class I material for bedding. The depth of Class I material will depend upon the amount of water, but take care to ensure that the trench wall soil material is such that it will not be removed from the area adjacent to the bedding as a result of the running water.

   b) Use well points or under-drain to control excessive ground water.

8. The width of the trench at any point below the top of the pipe shall not be greater than that necessary to provide adequate room for joining the pipe and compacting the haunching and initial backfill. Note that the trench width at the top of the pipe directly affects the soil load imposed upon the pipe. In narrow trenches compaction of foundation, bedding, haunching, and initial backfill should extend to the trench wall.

9. **Unstable Trench Bottom**. Where an unstable trench bottom condition is encountered, Contractor shall stabilize it before laying pipe or alternative foundation methods utilized. Contractor shall excavate to a depth as required by the engineer and replace with a foundation of Class IA, Class IB or Class II material as per ASTM D2321. Use a suitably graded material where conditions may cause migration of fines and loss of pipe support. Place and compact foundation material as indicated below under Backfilling, for the corresponding type of pipe. The Engineer may specify additional requirements.

10. The bottom of the trench shall be carefully graded to provided a firm support for the item being installed, with space for pipe joints, except where concrete cradles or equalizing beds of sand, gravel or selected fill material is required.

11. **Over excavation**. During the course of construction, should the trench be inadvertently over-excavated below a point 15 cm. (6 in) below the bottom of the pipe, but not beyond a point 30 cm. (12 in) below the bottom of the pipe, fill that area of over-excavation with an acceptable class of embedment material and compact to a minimum of 95 percent Modified Proctor as per ASTM D1557 for cohesive soils or 90% of maximum density per ASTM D4253 for granular soils. Fill any area of over-excavation beyond a point of 30 cm. (12 in) below the bottom of the pipe with processed stone or processed gravel in the same manner as required below for Haunching and Initial Backfill.

12. If class I material is used as bedding and under-drain, it must be utilized at least up to the spring line of the pipe to avoid loss of side support through migration of Class II or III haunching material into the bedding.

13. Even though trench excavation is unclassified, whenever rock is encountered; the trench shall be excavated fifteen (15) centimeters (6") below grade and refilled to grade with Class I, II or III. It shall be tamped to obtain at least 95% of maximum compaction as per ASTM D1557 or 90% of maximum density per ASTM D4253 for granular soils.

14. **Wide Trench**. Take care during excavation to provide as narrow a trench as practical at a point level with the top of the pipe. If the trench width is greater than 6 pipe diameters, haunching and initial backfill should be compacted to a point at least 2.5 pipe diameters from either side of the pipe. Depending upon the severity of trench conditions, bedding, and foundation should be compacted at least to the same point or wider and, if necessary, to the trench wall.

J. Bedding. Prior to pipe installation, carefully bring the bedding material to grade along the entire length of pipe to be installed. Where crushed gravel or crushed stone is used shall be as per ASTM C33 Gradation NO. 67.

The amount of bedding shall be as indicated in the Construction Drawings. If bedding height is 15 cm. or more high, it shall be placed in 15 cm. layers. Bedding shall be compacted to at least 95% of maximum density as per Modified Proctor ASTM D1557 for cohesive soils or 90% of maximum density per ASTM D4253 for granular soils.

To ensure that adequate and uniform support is provided under the pipe and to avoid differential settlement of the pipe, Contractor shall adhered to the following procedures and take the precautions outlined herein.

1. **Class I Material**. Depending upon the trench conditions encountered, the Engineer may elect to use a lesser depth of bedding with this material, such as in the case of unstable trench bottom, or a greater depth such as in the case of running water. A flat shovel is frequently used successfully to work the surface of Class I material to provide a level and uniform bedding. If Class I material is used for bedding, it must also be utilized for haunching at least up to the spring line of the pipe to avoid loss of side support through migration of Class II or III haunching material into the bedding.

2. **Class II Material**. Take care with Class II material to provide a uniformly compacted bedding. Excavate the bedding material or place to a point above the pipe bottom, determining such point by the depth of loose material resulting in preparation of the bedding and the amount of compaction that will be required to bring the material to grade. Use hand or mechanical tamping to compact the bedding material. Slightly damp material will generally result in maximum compaction with a minimum of effort. If water is added to improve compaction or if water exist in the trench, take care to avoid saturation of Class II material, which could result in additional stability problems of the bedding. Carefully bring the surface of the bedding to grade after compacting it.

3. **Class III Material**. This material can be used if the engineer soil specialist indicates in his report that class III material may be used for pipe bedding. Provide uniform pipe bedding for Class III

material in the same manner specified in K.2. (Bedding, Class II Material) and use hand or mechanical tamping to compact the bedding material. Take care to avoid excessive moisture in Class III material when used for bedding.

4. **Class IV and V Material**. These materials should not be used for bedding.

5. For large pipe diameter (12" to 48") installed in wide trenches, the bedding should be compacted to a point at least one (1) pipe diameter or two (2) feet from each side of the pipe, whichever is greater.

K. Haunching and Initial Backfill. The amount of haunching and initial backfill shall be as indicated in the Construction Drawings. If haunching height is 15 cm. or more , it shall be placed in 15 cm. layers. If initial backfill height is 15 cm. or more high, it shall be placed in 15 cm. layers. Haunching and initial backfill shall be compacted to at least 95% of maximum density as per Modified Proctor ASTM D1557 for cohesive soils, or 90% of maximum density per ASTM D4253 for granular soils. It may be advisable to have the pipe under pressure. Rolling equipment not allowed for working backfill materials in the haunching and initial backfill sector.

Contractor shall follow the following installation procedures relating to haunching and initial backfill:

1. **Wet Conditions**. In any area where the pipe will be installed below existing or future ground water levels or where the trench could be subject to inundation, Class I material when used shall be planed to the top of the pipe. However, in the initial stage of placing this type of material, take care to ensure that sufficient Class I material has been worked under the haunch of the pipe to provide adequate side support. Take precautions to prevent movement of the pipe during placing of the material under the pipe haunch. Except for the protection of the pipe from large particles of backfill material, little care need be taken and no compaction is necessary in placing backfill material in the balance of the initial backfill area above the pipe. Where unstable trench exist because of migratory materials such as water-bearing silts or fine sand, take care to prevent the loss of side support through the migratory action.

2. **Dry Conditions**. In any area where ground water will not be experienced at any time above the level of the foundation material or where the trench will not be subject to inundation place backfill material complying with Class II and Class III requirements to the spring line of the pipe. If backfill material is used above the spring line, achieve compaction consistent with the following:

   a) Class II Material. Place Class II material to the spring line of the pipe and compact by hand or mechanical tamping, however, in the initial stage of placing this material, take care to ensure that sufficient Class II material has been worked under the haunch of the pipe to provide adequate side support. Take precautions to prevent movement of the pipe during placing of the material under the pipe haunch. Place initial backfill material in two stages; one to the top to the pipe and the other to point at least 30 cm (12 in.) over the top of the pipe. Compact each stage of haunching and initial backfill by hand or mechanical tamping. If the trench width is less than twice of the diameter of the pipe where the moisture content at the pipeline grade is negligible and not subject to seasonal or local variations, Class II material can be

installed for pipe haunching in a dry state by hand placement with no compaction. With similar trench moisture conditions, puddle or flood backfill materials to achieve consolidation. Place the haunching to the spring line of the pipe, then puddle or flood. Place the initial backfill to provide a 30 cm. (12 in.) cover over the top of the pipe, then puddle or flood. Allow time for paddled or flooded mass in each layer to solidify until it will support the weight of a man. Apply only enough water to give complete saturation of the haunching and backfill material. Drain off excess water or it will retard the drying and consolidation of the haunching and backfill material.

b) Class III Material. Class III material can be used if the engineer soil specialist indicates in his report that class III material may be used for pipe bedding. Place Class III material with care under the lower haunch area of the pipe, compact, and then place additional material to the spring line of the pipe. If care has been taken to shape the bedding material to the curvature of the pipe, only one stage of placement will be required to bring the haunching material to the spring line of the pipe in either event, thoroughly compact the haunching material. Take precautions to prevent movement of the pipe during placing of material under the pipe haunch. Perform initial backfilling in the same manner as outlined under 2.a. (Dry Conditions, Class II material) using hand or mechanical tamping.

3. For large pipe diameter (12" to 48") installed in wide trenches, the haunching up to the pipe springline should be compacted to a point at least one (1) pipe diameter or two (2) feet from each side of the pipe, whichever is greater.

L. Final Backfill. The remainder to the top of the trench shall be filled with select previous excavated material approved by the Engineer. This material should be free from boulders or material that can reach the pipe. It shall be layed in layers of 0.3 mts. and compacted to 95% of maximum density as per Modified Proctor ASTM D1557 or 90% of maximum density per ASTM D4253 for granular soils.

M. Placing and Compacting Pipe Embedment. Place embedment materials by methods that will not disturb or damage the pipe. Work in and tamp the haunching material in the area between the bedding and the underside of the pipe before placing and compacting the remainder of the embedment in the pipe zone. Follow pipe manufacturer recommendations for excavation, backfilling, and placing the pipe. Engineer will solely decide any discrepancy between the manufacturer's recommendation and these specifications.

N. Excess Material. No excavated material shall be sold, removed or given away by the Contractor, and all excess material, after the backfilling is completed, shall be promptly removed to such points as the Engineer may direct, at no extra cost to PRASA. The disposal of all excess material shall comply with all the requirements of the Environmental Protection Agency and the Environmental Quality Board.

O. Demolition and Replacement of Pavement. Where existing streets, roads or highways are paved or where sidewalks, driveways or other special surfacing is encountered within the limits of the work, such pavement or surfacing shall be removed to the extent necessary for the work or as indicated on the plans and no separate amount will be paid therefor. Contractor shall perform the demolition and replacement of existing pavement, sidewalk, curb, and combination curb and gutter

as specified in Section 02C025 titled “Demolition and Replacement of Pavement, Sidewalks, Curbs, and Combination Curb and Gutter".

P. Restoration to Original Conditions. The Contractor shall restore all walks, green areas, roads shoulders, curbs, gutters, swales, entrances to public and private premises, and any other structure to their original conditions. Restoration shall be performed as indicated on section titled "Environmental Protection and Restoration” of the General Conditions. Backfilling, as well as paving material other than concrete, shall be thoroughly tamped and rolled with suitable tools and equipment for the proper execution of the work, as directed by Engineer. The Contractor shall start the repair of street and road pavement, not later than 5 working days after the pipe line has been installed and the excavation backfilled. Failure on the part of the Contractor to start the repair of streets or roads pavement at the time specified, shall give the Engineer Authority to call on other parties, or to perform the repair of streets or roads pavement at the expense of the Contractor; or to retain the monthly payment until this, or any other requirements of the Contract is fulfilled.

Q. Inspection of Work. No pipe shall be covered until it has been inspected and accepted by the Engineer.

R. Embankment. If embankment is necessary to cover pipe it shall be done by the Contractor without extra compensation.

3.02 FIELD QUALITY CONTROL

3.02.1 TESTS

A. Testing. Testing shall be performed by an approved testing laboratory at no additional cost to PRASA. Copies of all laboratory and field test reports shall delivered to Engineer within 24 hours of the completion of the test.

B. Optimum Moisture and Laboratory Maximum Density. The Modified Proctor test ASTM D1557 shall be made for each type of material or source of material, including borrow material to determine the optimum moisture and laboratory maximum density values. For granular soils ASTM D4253 shall be used. The tests shall be repeated as ordered by Engineer, or when any change in material occurs which may affect the optimum moisture content or laboratory maximum density.

C. Density Tests on Trench Backfill. In place density tests shall be made following ASTM D1556, ASTM D2167 or ASTM D2922 at intervals no more than 50 meters apart. The Engineer shall have the Authority to requests test be performed at closer intervals if he believe it is necessary due to field conditions. If ASTM D2922 is used it shall be calibrated as stated in ASTM D2922 and the moisture content shall be determined accordingly.

D. Moisture Content. In the stockpile, excavation or barrow areas, a minimum of two tests per day per type of material or source of materials being places is required during stable weather conditions. During unstable weather, tests shall be made as dictated by local conditions. Moisture content shall be tested in accordance with ASTM D2216.

SECTION 02A140
GABIONS

PART 1. GENERAL

1.01 SUMMARY

1.01.1 SECTION INCLUDES

This section includes furnishing and placing wire mesh baskets (gabions) filled with rock, installed at the locations designated, in accordance with these specifications, and in conformity with the 1ines, grades, dimensions and arrangements shown on the plans or ordered by the Engineer. This work includes the wide, flat rectangular gabions known as Reno mattresses.

1.02 DEFINITION

EOS is defined as the umber of the US Standard Sieve having openings closest in size to the filter fabric openings. The cloth shall be tested using specially screened sand on a shaker for 20 minutes.

PART 2. PRODUCTS

2.01 MATERIALS

2.01.1 GABIONS

A. Regular gabions shall be supplied in the various 1engths and heights as specified. The lengths shall be multiples (1 or 2) of the horizontal width. The heights shall be fractions (1, 1/2, or 1/3) of the horizontal width. The horizontal width shall be not less than 39.37" (1.00 M) and all gabions furnished for a project shall be of uniform width. Gabion dimensions are subject to a tolerance limit of + 5% of manufacturers stated sizes.

B. Reno mattress type gabions shall be supplied in dimensions indicated in the Construction Drawings. Typical dimensions are: lengths of 9 or 12 feet (2.743 or 3.658 M), width of 6 feet (1.829 M), and height of 9 inches (0.23 M).

C. The wire mesh shall be made of galvanized steel wire twisted to form hexagonal openings of uniform size. For regular gabions, the maximum dimension of mesh opening shall not exceed 4 1/2 inches and the area of the mesh opening shall not exceed 10 square inches. For Reno mattresses, the opening shall be approximately 2 1/2 by 3/4 inches. The mesh shall be fabricated in such manner as to resist pulling apart at any of the twists or connections forming the mesh when a single wire strand in a section is cut and subjected to the elasticity test.

D. The galvanized steel wire for the mesh of regular gabions shall have a minimum size of 0.12 inch diameter (U.S. Wire Gage No. 11) and a tensile strength in the range of 60,000 to 85,000 psi. The minimum zinc coating of the wire shall be 0.80 oz./sq. ft. of uncoated wire surface as determined by test conducted in accordance with ASTM A90.

E. The galvanized steel wire for the edges of the Reno mattress mesh shall be 0.12" diameter (U.S. Wire Gage No. 11) but the remainder of the mesh wire may be 0.09" diameter (U.S. Wire Gage No. 13). Tensile strength and zinc coating shall be as described above.

F. Where the length of the gabions exceeds its horizontal width, the gabions shall be equally divided by diaphragms of the same mesh and gage as the body of the gabions, into cells the length of which does not exceed the horizontal width. The gabions shall be furnished with the necessary diaphragms secured in proper position on the base in such manner that no additional tying at this juncture is necessary.

G. All perimeter edges of the mesh forming the gabions shall be securely selvedge so that the joints formed by tying the selvedges have at least the sane strength as the body of the mesh. Selvedge wire used on all the edges (perimeter wire) shall be not less than 0.15 inch diameter (U.S. Wire Gage No. 9) for regular gabions and 0.12 inch diameter (U.S. Wire Gage No. 11) for Reno mattress type and shall meet the same specifications as the for the mesh given in this section.

H. Tie and connecting wire shall be supplied in sufficient quantity for securely fastening all edges of the gabions and diaphragms and to provide for four (4) cross connecting wires in each cell whose height is 1/3 or 1/2 the width of the gabions and eight (8) connecting wires in each cell whose height equals the width of the gabion. This lacing wire shall be galvanized steel wire no less than 0.09-inch diameter (U.S. Gage No. 13) and shall meet the same specifications as mesh wire.

I. When called for in the contract documents, the mesh, selvedge and lacing wire for the gabions shall be provided with a PVC coating of at least 0.015 inch and meeting the AASHTO M181.

J. Elongation Test. The wire mesh shall have sufficient elasticity to permit elongation of the mesh equivalent to a minimum of 10% of the length of the section of the mesh under test without reducing the gage or tensile strength of individual wires to values less than those for similar wire one gage smaller in diameter.

K. Elasticity Test. A section of a mesh 6 feet long and not less than 3 feet wide, after first being subject to the elongation test described above, shall withstand a load test of 6,000 pounds applied to an area of one square foot approximately in the center of the section under test. The details of this test are as follows:

An uncut section of mesh 6 feet long, not less than 3 feet wide and including all selvedge bindings shall have the ends securely clamped for 3 feet along the width of the sample. When the width of the sample under test exceeds 3 feet, the clamps will be placed in the middle portion of the width and the excess width will be allowed to fall free on each side of the clamped section. The sample shall then be subjected to sufficient tension to cause 10% elongation of the sample section between the clamps. After elongation and while clamped as described above (and otherwise unsupported), the section shall be subjected to a load applied to an area of one square foot located approximately in the center of the sample section between the clamps, and in a direction perpendicular to the direction of the tension force. The sample shall withstand, without rupture of any wire, or opening of any mesh fastening, an actual load, so applied, equaling or exceeding 6,000 pounds. The ram head used in the test shall be circular with its edges beveled or rounded to prevent cutting of the wires.

2.01.2 FILLER ROCK

A. All rock used in the gabions shall be sound and durable and from a source approved by the Engineer. The rock shall have a percent of wear of not more than 45 when tested by AASHTO T96. Rock samples shall be crushed to less than 1.5 inch size for testing.

B. The filler rock shall be reasonably well grade between the limiting sizes shown below:

Basket or Height	Minimum Rock Dimension	Maximum Rock Dimension
9 inches	3 inches	6 inches
12 inches	4 inches	8 inches
Greater than 12 inches	4 inches	12 inches

2.01.3 FILTER PLASTIC CLOTH

A. Plastic filter cloth shall consist of linear propylene, polyester or nylon fiber woven into pervious sheets of a uniform pattern with distinct openings and of no less than 25 mils thickness. The length and width of sheets ray be varied to suit the manufacturers standards. Seams meeting the strength requirements of the plastic cloth will permitted.

B. Fibers of other composition or steel wire may be woven into the cloth for reinforcing purposes. The durability of these fibers must be equivalent to that of the plastic filter cloth.

C. The filter cloth shall contain stabilizers and/or inhibitors added to the base plastic to make the filaments resistant to deterioration due to ultra-violet and heat exposure.

D. The plastic filter cloth shall meet the following requirements:

Physical Property	Test Method	Requirements
Equivalent Opening Size (EOS)	*	70-100
Grab Tensile Strength, Min.	ASTM D1682	140 lbs.
Grab Elongation	ASTM D1682	25% Min. 70% Max.
Propylene, Polyester or Nylon Content		85% Min.

PART 3. EXECUTION

A. Gabions shall be fabricated in such manner that the sides, ends, lid, and diaphragms can be assembled at the construction site into rectangular baskets of the specified sizes. Gabions shall be of single unit construction - base, lids, ends, and sides shall be either woven into a single unit or one edge of these members connected to the base section of the gabions in such a way that the strength and flexibility at the point of connection is at least equal to that of the mesh.

B. Gabions shall be installed according to the manufacturer's recommendations. Any required excavation preparation of the foundation shall be completed as indicated on the plans or ordered by the Engineer prior to the installation of the gabions. Plastic filter cloth shall be installed between the gabions and the foundation or backfill material unless otherwise indicated on the plans.

C. Each gabions unit shall be assembled by binding together all vertical edges with wire ties on approximately 15 cm. (6”) spacing or by a continuous pieces of connecting wire stitched around the vertical edges with a coil about every 15 cms. (6”). Empty gabions units shall be set to line and grade as shown on the plans or as directed by the Engineer. Wire ties or connecting wire shall be used to join the units together in the wires shall be uniformly spaced and securely fastened in each cell of the structure. or connecting wire shall be used to join the units together in the shall be uniformly spaced and securely fastened in each cell of the structure.

D. A standard fence stretcher, chain fall or iron rod may be used to stretch the wire baskets and hold alignment.

E. The in-place gabions shall be filled with rock placed carefully by hand or machine method, acceptable to the Engineer, to assure alignment, avoid bulges, and have a minimum of voids. Filler stone shall be selected of proper sizes to voids at a minimum. Alternate placing of stone and wires shall be performed every 1/3 of the height of the gabions cell until each gabions has been filled. All gabions baskets in the exterior face of a wall shall be filled by hand except for Reno methods Mattresses which may be filled by machine methods providing results acceptable to the Engineer.

F. After each gabion has been filled, the lid shall be bent over until it meets the sides and edges. The lid shall then be secures to the sides, ends and diaphragms with wire ties or connecting wire in the same manner as described above for assembling.

3.02 FIELD QUALITY CONTROL

A. Test Reports. The Contractor shall furnish to the Engineer copies of certified test reports from the manufacturer or from an independent laboratory showing all the data to ascertain compliance with these specifications, and certification that the material meet the requirements of these specifications.

B. Materials Certificate. Each shipment of gabions to the project shall be accompanied by a manufacturer's certificate to the effect that the gabions being furnished meet all the requirements of this specification. A shipment shall consist of all material arriving at the project site at substantially the same time.

SECTION 02B032
PRECAST SECTIONAL CONCRETE PILES

PART 1. GENERAL

1.01 SUMMARY

1.01.1 SECTION INCLUDES

A. Driving of test piles.

B. Load Test.

C. Driving of precast sectional concrete piles.

D. Protection of persons and property.

1.01.2 RELATED SECTIONS

A. Section 033100 - Cast in Place Concrete.

1.02 REFERENCES

A. ASTM A615 - Deformed and Plain Billet Steel Bars for Concrete Reinforcement.

B. ASTM D1143 - Piles Under Static Axial Compressive Load.

C. ASTM D1.1 - Structural Welding Code - Steel.

D. PCI MNL116 - Manual for Quality Control for Plants and Production of Precast and Prestressed Concrete Products.

1.03 QUALITY ASSURANCE

A. Fabricator Qualifications: Firm which has a minimum of 10 years of successful experience in fabrication of Precast sectional concrete piles similar to units required for this Project with sufficient production capacity to produce required piles without causing delay in Work.

B. Fabrication Qualifications: Produce Precast sectional concrete piles at a fabricating plant engaged primarily in manufacture of similar units.

C. Allowable Tolerances: Fabricate Precast sectional concrete pile within dimensional tolerances stated herein.

D. Welder Qualifications: Qualify welders, welding processes, and procedures in accordance with AWS D1.1

E. Pile Driver Field Supervision: Require Pile subcontractor to maintain a full-time supervisor/foreman who is on jobsite during times that pile driving operations are in progress and

who is on jobsite during times that pile driving operations are in progress and who is experienced in pile driving operations similar to type and scope required for this Project.

F. Pile Driving Inspector: Contractor shall furnish and pay for services of a Registered Geotechnical engineer who will witness, compile and attest driving of test piles, load tests and driving of all Precast sectional concrete piles.

1.04 SUBMITTALLS

A. Submittals shall be as required by the General and Supplementary Conditions and by Section 013340 titled SHOP DRAWINGS, PRODUCT DATA AND SAMPLES.

B. Pile Layout Drawings. Indicate layout of each pile.

C. Manufacturer's Catalog Data: Descriptive data demonstrating compliance of pile driving equipment including hammer and pile cushion.

D. Fabrication/Section/Installation Drawings: Indicate dimensions of Precast sectional concrete piles, reinforcement, forming, splicing, casting of piles, welding of steel sleeves and other details of the piling.

E. Test Reports. Contractor shall furnish within seven calendar days of completion of each load test a complete report on the load test, including, but not limited to, a description of the pile driving equipment, driving records for the test piles, complete test data, analysis of test data, and recommended allowable design loads based on the pile test results. The report shall be prepared by a registered professional engineer experienced in pile load testing and load test analysis.

F. Driving Record. A complete and accurate record of each driven pile shall be furnished by the Contractor to the Arquitect-Engineer not later than 5 calendar days after driving. Driving record shall be complied and attested by a registered professional engineer paid by the Contractor. Driving records shall contain the following information:

1. Project name

2. Name of Contractor and pile subcontractor.

3. Pile location as driven and number.

4. Type and size of hammer used.

5. Type of pile driving cap used.

6. Rate of operation of pile driving equipment.

7. Pile dimensions (size and length)

8. Elevation of point.

9. Elevation of butt before and after cut-off.

10. Ground elevation.

11. Number of splices and locations. On tension piles indicated time spent on welding of sleeved (full penetration).

12. Blows required for each foot of penetration through the entire length of the pile and for the final 6 inches of penetrations.

13. Total driving time

14. Pile deviation

15. Pile uplift

16. Any unusual occurrence during pile driving.

G. Concrete Test Results. Reports of test shall contain the project name and number, date, pile number, name of Contractor, name of concrete supplier and truck number, name of testing services, design compressive strength, concrete mix portions and materials, and compression breaking strength and type of break.

H. Driven Drawings. Indicate as driven layout of each pile and sealed by a Registered Surveyor.

1.05 PROJECT CONDITIONS

A. Site Information: Data on indicated subsurface conditions are not intended as representations or warranties of continuity of such conditions. It is expressly understood that PRASA will not be responsible for interpretations or conclusions drawn there from by the Contractor. The data are made available for convenience of the Contractor. Additional soil borings and other exploratory operation may be made by the Contractor at no additional cost to the PRASA.

B. Protection of Construction: Construction shall be protected from damage caused by pile driving operations. Piles driven within 15 feet of construction shall be in pre-augured holes.

C. Provide surveyed elevation bench marks on structures before commencing pile driving operations when structures are within 10 feet of pile driving operations. Record and report elevation of each bench mark before after driving each pile and at least twice a day while pile driving is in progress. In the event that bench mark readings indicate displacement, halt driving operations until corrective action has been provided and is acceptable to Engineer.

1.06 DELIVERY, STORAGE AND HANDLING

A. Storing and handling of the piles shall be such that the piles will not be subject to over stress or any other condition that may cause damage to the piles.

B. Deliver below to the project site in such quantities and at such times to ensure continuity of pile driving operations and adherence to project schedule.

PART 2. PRODUCTS

2.01 MATERIALS - PIPES

A. Concrete: Conform to Section 033100 Cast-In-Place Concrete with a minimum compressive strength of 5,000 psi at 28 days. The maximum size of aggregate shall be 1 inch. Slump shall be 4 inches maximum.

B. Reinforcing Steel: ASTM A615, Grade 60.

C. Bar Supports and spacers: Wire type conforming to CRSI MSP-1.

2.02 FABRICATION

A. Forms: Wood, metal or other approved material, built to provide piles that conform to the dimensions and shapes indicated. Forms shall be constructed sufficiently tight to prevent seepage of the mortar from the mix and shall be of sufficient strength to prevent distortion. Piles shall be independently cast. Forms shall be thoroughly cleaned and oiled with a nonstaining mineral oil before initial use and before each reuse. The use of any other form-release agent shall require prior approval. Forms shall be constructed accurately and set on unyielding bases.

B. Reinforcement: designed to withstand the stresses caused by handling and driving the piles. Reinforcement design shall be in accordance with ACI 318, Chapters 9 and 14, except that vertical reinforcing shall consist of not less than eight equally spaced bars instead of six. Steel wire spirals shall be placed not more than 2 inches apart, center-to-center, for a distance of 2 feet from pile end and no more than 6 inches elsewhere. Steel wire shall be not less than No. 4 gage. Reinforcing bars shall be assembled and tied together by means of the specified wire spirals to form a rigid unit. This unit shall be placed in the form and secured in position by bar supports and spaces to provide a concrete cover over reinforcement of not less than 1 ½ inches.

C. Concrete Placement: Each unit shall be poured in one continuous operation, starting at one end of the pile and continuing to the other without interruption. Exposed surfaces shall be screeded to a uniform even surface and finished to match formed sides of the pile. Piles shall be cast so that the lifting points indicated are clearly marked and accessible for moving the piles as required. Each pile shall have the date of casting plainly indented in the concrete. Piles shall not be cast or piled in tiers except when and as directed. Piles shall be lifted and supported only at predesignated lifting points. Side forms shall remain in place for at least 48 hours after placement of concrete if regular Portland cement is used or at least 24 hours if high-early-strength cement is used. The exposed or top face of piles shall be protected from the direct rays of the sun and from wind by wet-burlap covering, an approved impervious sheet material, or an approved membrane-forming curing compound; and the sides shall be likewise protected forms are removed.

D. Curing: Concrete shall be cured as specified in Section 033100 Cast-In-Place Concrete except as modified herein. All concrete shall be maintained in a moist condition for at least 7 days if made with regular Portland cement or at least 3 days if made with high-early-strength cement after placing or until design strength is obtained. Where extreme conditions of hot weather or wind produce surface crazing or cracks, all exposed surfaces shall be fog-sprayed starting immediately after strike-off of the fresh concrete. Where piles are cured by steam or other approved methods, the curing time

may be reduced provided the require compressive strength of the concrete is obtained. Piles may be removed from the forms when the concrete has attained sufficient strength to prevent deformation, subject to prior approval.

E. Repair of Surface Defects: As soon as the forms are removed, defects in the surface of the concrete piles shall be pointed with mortar consisting of one part Portland cement, 2 1/2 parts fine aggregate, and mixing water as necessary for the stiffest consistency that will permit placing.

F. Fabrication Tolerances: Piles shall be fabricated in a manner not to exceed the following limits of tolerance:

Diameter	Plus or minus 1 inch for any one spiral
Deviation from a Straight Line Parallel to the Center Line of the Pile	Maximum 3/8 inch per 20 feet length
Concrete Cover Over Reinforcement	Minus 0 inch to plus 1/4 inch
Spiral Spacing	Plus or minus 1 inch for overall group of spirals Plus or minus 1/4 inch

2.03 DRIVING EQUIPMENT

A. General: Provide pile driving equipment of type generally used in standard pile practice, operated at manufacturer's specified rate, to develop required rated energy blow.

B. Pile Hammers: The hammer used shall have a delivered energy suitable for the total weight of the pile, the character of subsurface material to be encountered, and the pile capacity to be developed. The driving energy of the hammer shall be not less than 15,000-foot pounds. Diesel-powered hammers shall be operated at the rate recommended by the manufacturer throughout the entire driving period. Sufficient pressure shall be maintained at the steam hammer so that: (1) for double-acting hammer, the number of blows per minute during and at the completion of driving of a pile is equal approximately to that at which the hammer is rated; (2) for a single-acting hammer, there is full upward stroke of the ram; and (3) for a differential type hammer, there is a slight rise of the hammer base during each upward stroke.

C. Driving Helmets and Pile Cushions: A driving helmet or cap including a pile cushion shall be used between the top of the pile and the ram to prevent impact damage to the pile. The driving helmet or cap and pile cushion combination shall be capable of protecting the head of the pile, minimizing energy absorption and dissipation, and transmitting hammer energy uniformly over the top of the pile. The driving helmet or cap shall fit loosely around the top of the pile so that the pile is not restrained by the driving cap if the pile tends to rotate during driving. The pile cushion may be of solid wood, of laminated construction using plywood, softwood, or hardwood boards, or of other approved cushioning material. The pile cushion shall completely cover the top surface of the pile and

shall be retained by the driving helmet. The minimum thickness of the pile cushion shall be 3 inches, and the thickness shall be increased so as to be suitable for the size and length of pile, character of subsurface material encountered, hammer characteristics and required driving resistance. The pile cushion shall be replaced at any time it becomes highly compressed, charred, burned, or becomes deteriorated in any manner during driving.

PART 3. EXECUTION

3.01 TEST PILES AND LOAD TESTS

A. Test Piles. Test piles shall be of the type and shall be driven in the manner specified herein. The Soil Engineer will use test pile and load test data to determine "calculated" pile tip elevations and the necessary driving resistance. Test piles that are located within the tolerances indicated and that provide a safe design capacity as determined by the results of a satisfactory load test may be used in the finished work. Test piles shall be driven at the locations indicated. Test piles shall be driven to the tip elevation specified or indicated.

B. Load Tests. Load tests at location shown or directed shall be made on test piles placed to the tip elevation indicated except as otherwise directed. Loading, testing and recording of data shall be under the direct supervision of a Registered Geotechnical Engineer. The installation of piles shall not proceed in a new area with substantially different subsurface conditions until a satisfactory load test has been performed in that area and the results approved. A minimum of 5 days after submission of the test pile data shall be allowed for approval. A minimum of 3 days shall be elapse after driving the pile before the initiation of the pile testing, unless otherwise directed. Test loading shall conform to the apparatus and methods stated in ASTM D 1143, cyclic loading method. The load shall be applied to the pile or pile group by either hydraulic jacks acting against an anchored reaction frame, hydraulic jacks acting against a weighted platform or box or direct loading of a weighted platform using a spherical bearing to transmit the load to the pile.

C. Load Test Reports. Provide reports for each test pile.

3.02 PREPARATIONS BEFORE DRIVING

A. Site Conditions. Do not drive piles until earthwork in area in which piles are to be driven has been completed, as follows:

1. Excavations will be stopped at an elevation of 6 inches above the bottom of the footing before piles are driven. Final excavation to the required elevation of footing bottoms shall be done as a part of the earthwork for structures after piles have been driven and test.

2. Fills will be constructed and compacted to elevations of grade indicated.

B. Pile Length Markings: Before driving is begun, mark each pile length with horizontal line at 1 foot interval including the number of feet from pile point.

C. Concrete Strength Before Driving Piles: Piles shall not be driven until the concrete has attained the compressive strength at 28 days as specified.

3.03 PILE DRIVING

A. General. Each pile shall be continuously driven, at the locations indicated, to the required point elevation and driving resistance establish by driving and loading test piles as specified.

B. Specific Requirements

1. Driving shall be done with fixed leads that shall hold the pile firmly in position, Alignment, and in axial alignment with the hammer.

2. Piles shall be driven continuously and without interruption to or below the "calculated" tip elevation to reach a driving resistance in accordance with the schedule that the Soil Engineer will prepare from the load test results.

3. The pile hammer used for driving shall be the same type and operated at the same rate and in the same manner as that used for driving the test piles.

4. If a pile fails to reach the "calculated" tip elevation or required driving resistance, the Contractor shall notify the Soil Engineer and perform the corrective measures as directed.

5. Piles shall be carefully located to the lines and spacing indicated and shall be driven either to the plumb position or the batter indicated.

6. Care shall be taken to operate the hammer at its short stroke when the tip of the pile encounters soft material of little resistance either at the start of the driving or in passing into poor subsoil.

7. The hammer should continued at is short stroke until sufficient resistance is built up to prevent damage due to tensile wave stresses.

8. When driving is interrupted before final penetration is reached, the record of the penetration shall not be taken until after at least a 12-inch penetration has been obtained on the resumption of driving.

C. Driving Tolerances. Piles shall be driven within the maximum permissible tolerances as follows:

1. Location: 3 inches from the location indicated for the center of gravity of single piles or pile groups.

2. Plumbness: 1/4 inch per foot of pile length, from the vertical.

3. Batter Angle: 1/2 inch per foot of pile length, from the required angle.

4. Piles damaged or driven outside the above tolerances shall be replaced, or additional piles driven at locations specified by the Engineer at no additional cost to PRASA.

D. Cutting of piles: Piles shall be cut off at the elevations indicated by an approved method and the surplus material shall be removed from the job site.

E. Rejected Piles. Piles damaged, mislocated, or driven out of alignment beyond the maximum tolerance shall be withdrawn and replaced by new piles or shall be cut off and abandoned. Additional piles shall be driven as directed and excess cut off from piles; unacceptable piles shall be removed from the site of work. All work in connection with withdrawing and removing from the site rejected piles shall be done without additional cost to PRASA.

F. Pre-Augered Holes. Piles shall be driven in pre-augered holes drilled to a minimum depth of 15 feet. Diameter of hole shall be the diameter of the pile. Pre-augered holes will be permitted only when approved by the Soil Engineer.

G. Pile Heave. When large pile clusters or piles are driven with very close spacing, periodic elevations shall be taken on the tops of all piles to observe and determine pile heave. When such checking indicates the pile heave has occurred, and when pile driving progresses beyond effective pile heave range, all heaved piles shall be redriven to either the original resistance or the elevation, or both as directed.

H. Jetting of Piles. Jetting will not be permitted.

3.04 DAMAGE AND MISDRIVEN PILES

A. Damage piles and piles driven outside the specified driving tolerances will not be accepted.

B. When directed, piles rejected after driving may be abandoned, cut-off 1 foot below bottom of footing; additional piles shall be driven to replace the rejected piles at the newly designated locations as per Engineer's instructions, at no additional cost to PRASA.

SECTION 02B034
PRESTRESS CONCRETE PILES

PART 1. GENERAL

1.01 SUMMARY

1.01.1 SECTION INCLUDES

A. Verification of existing conditions

B. Prestressed precast concrete piles

C. Pile points

D. Erection tolerances

E. Field quality control

1.01.2 RELATED SECTIONS

A. Section 02A050: Excavation, Fill/Embankment and Backfill

1.01.3 REFERENCES

A. ASTM A416/A416M - Standard Specification for Steel Strand, Uncoated Seven-Wire for Prestressed Concrete.

B. ASTM A615/A615M - Standard Specification for Deformed and Plain Billet-Steel Bars for Concrete Reinforcement.

C. PCI MNL-116S - Manual for Quality Control for Plants and Production of Precast and Prestressed Concrete Products.

1.01.4 SUBMITTALLS

A. Shop Drawings. Indicate details and schedule of pile installation sequence. Identify recommended pile length and size to suit design requirements.

B. Product Data:

1. Submit concrete mix design indicating cured properties and mix components.

2. Submit data for tendons and reinforcing.

3. Submit details of points, splices and cushion blocks.

C. Design Data. Include design calculations signed and sealed by professional engineer registered in the Commonwealth of Puerto Rico.

1.01.5 CLOSEOUT SUBMITTALS

A. Project Record Documents. Accurately record the following:

1. Sizes, lengths and locations of piles.

2. Sequence of driving.

3. Number of blows per foot for entire length of piles and measured set for last 10 blows.

4. Piles requiring drilling and hole diameters.

5. Final base and top elevations.

6. Driving force of each hammer blow.

1.01.6 QUALITY ASSURANCE

A. Perform Work in accordance with PCI MNL-116S.

1.01.7 QUALIFICATIONS

A. Installer. Company specializing in performing the Work of this section with minimum ten years documented experience.

B. Design and select pile components under direct supervision of Professional Engineer experienced in design of this Work and licensed in the Commonwealth of Puerto Rico.

C. Monitor pile driving operations by Geotechnical Engineer experienced in this Work and licensed in the Commonwealth of Puerto Rico.

1.01.8 PRE-INSTALLATION MEETINGS

A. Convene minimum one week prior to commencing Work of this section.

1.01.9 SCHEDULING

A. Schedule Work to perform driving from 7:00 am to 3:00 pm.

B. Schedule test piles.

PART 2. PRODUCTS

2.01 MATERIALS

A. Concrete. Minimum 5,000 psi, 28 day strength, Normal Portland cement; aggregates and sand as recommended by pile manufacturer.

B. Tensioning Steel Tendons. ASTM A416/A416M Grade 270K, of sufficient strength commensurate with member design.

C. Reinforcing Steel. ASTM A615/A616M Grade 60 deformed steel bars.

2.02 FABRICATION

A. Pile Points. Hardened steel, hollowed tip to minimize bounce or deflection.

B. Pile Section Joint Ends. Male and female, with positive lock, formed steel.

C. Shop fabricate pile in maximum practical lengths to meet design requirements.

D. Cure piles to attain design strength.

2.03 SOURCE QUALITY CONTROL

A. Test sample piles in accordance with PCI MNL-116S.

PART 3. EXECUTION

3.01 PREPARATION

A. Use driving method which will not cause damage to nearby structures.

B. Notify adjacent and affected land owners and building occupants with seven days notice before proceeding with the Work.

C. Protect structures near the Work from damage.

3.02 DRILLING

A. Drill holes to facilitate driving only when piling cannot be complete in specified manner. Drill only through strata obstructing driving.

B. Hole Diameter. Maximum 1 inch larger than tip dimension.

3.03 INSTALLATION

A. Protect pile head during driving, using cushion cap with full bearing on pile butt for even distribution of hammer blow.

B. Deliver hammer blows to central axis of pile.

C. Do not damage piles during driving operations.

D. When driving is interrupted before refusal, drive an additional 12 inches before resuming recording of performance data.

E. Re-drive piles which have lifted due to driving adjacent piles, or by soil uplift.

F. Prepare pile top to receive pile caps.

3.04 ERECTION TOLERANCES

A. Maximum Variation From Vertical For Plumb Piles: 1 in 48.

B. Maximum Variation From Required Angle For Batter Piles: 1 in 24.

C. Maximum Variation From Pile Cut-off Elevation: 4 inches.

D. Maximum Out-of-Position: 2 inches.

3.05 FIELD QUALITY CONTROL

A. Perform static load tests to requirements of ASTM D1143 and dynamic load test using the pile driving analyzer.

B. Test Piles. Same diameter and type as specified for other piling, placed in same manner.

C. Accepted test piles may be used in the Work.

D. Unacceptable Piles. Piles that fail test, are placed out of position, are below cut-off elevations, or are damage.

E. Provide additional piles or replace piles to conform to specified requirements.

SECTION 02B055
PILE CAPS

PART 1. GENERAL

1.01 SUMMARY

1.01.1 SECTION INCLUDES

A. Under this section the Contractor shall execute all excavation, furnish all materials, labor, equipment and others and properly install all pre-cast and job-built Pile Caps shown in the Construction Drawings.

1.02 SUBMITTALS

A. Pre-cast Pile Caps shall be manufactured to the tolerances indicated in the Construction Drawings to permit insertion of the piles in them. A schedule of the pile cap assemblies shall be submitted to the Engineer for approval before fabrication.

PART 2. PRODUCTS

2.01 MATERIALS

A. Concrete. All concrete for pre-cast pile caps shall have a 28 day compressive strength indicated in the Construction Drawings and shall conform to Section 033100 - "Cast in Place Concrete".

PART 3. EXECUTION

A. Contractor shall execute all excavation, furnish all materials, labor, equipment and others and properly install all pre-cast and job-built pile caps shown in the Construction Drawings.

B. Excavation for pile caps shall be of ample dimensions to permit easy installation or construction. Backfilling shall be carefully placed so as not to injure the masonry.

C. Job-built Construction. All voids in concrete shall be filled with mortar and carefully troweled and all fins and other projections removed as soon as forms have been removed and while the concrete has not set.

D. Pre-cast Construction.

1. Where the sub-grade is mucky at pre-cast Pile Caps, three inches of additional excavation shall be made and a three inch layer of stone placed on the sub-grade, without any additional compensation.

2. All lifting, handling and erection shall be done in such a manner that overstressing of the member is avoided.

3. Precast Pipe Cradle. Pipe cradle shall be pre-cast to the dimensions shown in the Construction Drawings and of sufficient strength to withstand the loads to be imposed upon them. They shall

be formed to fit the pipe that shall rest on them and have enough clearance between the outer bottom of the pipe. This is to allow the pipe to be brought to invert grade with the insertion of steel wedges and a masonry grout to set the pipe permanently in place. The cradle and pile cap shall be manufactured as one unit.

SECTION 02C025
DEMOLITION AND REPLACEMENT OF PAVEMENT, SIDEWALK, CURB AND GUTTER

PART 1. GENERAL

1.1 SUMMARY

1.1.1 SECTION INCLUDES

This section includes furnishing all materials, labor, tools, plant and equipment required to perform the demolition and replacement of existing pavement, sidewalk, curb and gutter indicated in the Construction Drawings and/or required by Engineer, including trimming, line cutting of pavement and all other incidental work.

1.1.2 PAYMENT

A. The lump sum amount indicated in the Proposal item 1 includes the demolition and replacement of pavement, sidewalk, curb and gutter, as indicated in the Construction Drawings and as specified herein, including the furnishing and placing of black base material along trench excavation up to the existing grade.

B. Furnishing and placing of wearing course outside trench limits, along streets, municipal roads and state roads, curb to curb as required by the Engineer, shall be paid on a unit price basis, as quoted in the Proposal.

1.1.3 RELATED SECTIONS

A. Section 033100 – Cast in Place Concrete

1.2 WARRANTY

A. The Contractor shall guarantee the restoring of sidewalks, curbs and gutter, streets and road surfaces for a period of one year after the date of Engineer's final inspection and acceptance.

Failure on the part of the Contractor to make good, any improper or defective work under this specification, shall give PRASA the right to call on other parties to correct defects or to make necessary repairs of damages at the expense of the Contractor, and such expenses so incurred shall be deducted from the money due the Contractor under the provisions of the Contract attached hereto. If there is no money due the Contractor, the expense may be recovered from either the Contractor or the Bonding Company by means PRASA may consider proper.

1.3 PLANT, EQUIPMENT, MACHINES, AND TOOLS

1.3.1 GENERAL REQUIREMENTS

A. Plant, equipment, machines, and tools used in the work shall be subject to approval and shall be maintained in a satisfactory working condition at all times. The equipment shall have the capability of producing the required product, meeting grade controls, thickness control and smoothness

requirements as specified. Use of the equipment shall be discontinued if it produces unsatisfactory results. The Engineer shall have access at all times to the plant and equipment to ensure proper operation and compliance with specifications.

B. The same requirements specified in this section for curb and gutters apply to curb, gutters, and combination curb and gutters.

1.3.2 SLIP FORM EQUIPMENT

A. Slip form paver or curb forming machine, will be approved based on trial use on the job and shall be self-propelled, automatically controlled, crawler mounted, and capable of spreading, consolidating, and shaping the plastic concrete to the desired cross section in 1 pass.

PART 2. PRODUCTS

2.1 MATERIALS

A. All materials shall comply with the Construction Drawings, specifications and with the requirements of the Puerto Rico Department of Transportation and Public Works (DTPW), and the Puerto Rico Highway and Transportation Authority (HTA).

B. Materials to be used for replacement and construction of sidewalk, curb and gutter shall conform to Section 033100 titled "Cast in Place Concrete". Steel reinforcement shall be as indicated in the Construction Drawings and specifications.

C. The concrete slump shall be 3 inches plus or minus 1 inch where determined in accordance with ASTM C 143. The concrete slump shall be 1 inch plus or minus 1 inch for slipformed concrete.

D. Steel reinforcement bars shall conform to ASTM A 615/A 615M, ASTM A 616/A 616M, or ASTM A 617/A 617M. Wire mesh reinforcement shall conform to ASTM A 185.

2.2 FORM WORK

Form work shall be designed and constructed to ensure that the finished concrete will conform accurately to the indicated dimensions, lines, and elevations, and within the tolerances specified. Forms shall be of wood or steel, straight, of sufficient strength to resist springing during depositing and consolidating concrete. Wood forms shall be surfaced plank, 2 inches nominal thickness, straight and free from warp, twist, loose knots, splits or other defects. Wood forms shall have a nominal length of 10 feet. Radius bends may be formed with 3/4 inch boards, laminated to the required thickness. Steel forms shall be channel-formed sections with a flat top surface and with welded braces at each end and at not less than two intermediate points. Ends of steel forms shall be interlocking and self-aligning. Steel forms shall include flexible forms for radius forming, corner forms, form spreaders, and fillers. Steel forms shall have a nominal length of 3 m 10 feet with a minimum of 3 welded stake pockets per form. Stake pins shall be solid steel rods with chamfered heads and pointed tips designed for use with steel forms.

2.2.1 SIDEWALK FORMS

Sidewalk forms shall be of a height equal to the full depth of the finished sidewalk.

2.2.2 CURB AND GUTTER FORMS

Curb and gutter outside forms shall have a height equal to the full depth of the curb or gutter. The inside form of curb shall have batter as indicated and shall be securely fastened to and supported by the outside form. Rigid forms shall be provided for curb returns, except that benders or thin plank forms may be used for curb or curb returns with a radius of 10 feet or more, where grade changes occur in the return, or where the central angle is such that a rigid form with a central angle of 90 degrees cannot be used. Back forms for curb returns may be made of 1-1/2 inch benders, for the full height of the curb, cleated together. In lieu of inside forms for curbs, a curb "mule" may be used for forming and finishing this surface, provided the results are approved.

PART 3. EXECUTION

3.1 GENERAL REQUIREMENTS

A. All work shall be in accordance with the specifications of the DTPW, the HTA and other Agencies having jurisdiction.

B. The subbase, blackbase, wearing course and/ or concrete pavement shall be equal in all respects to the latest standards, specifications and requirements of the DTPW and the HTA for the type of payment indicated in the Construction Drawings.

3.2 DEMOLITION

A. Where existing streets, roads or highways are paved or where sidewalks, driveways or other special surfacing is encountered within the limits of the pipe trench, such pavement or surfacing shall be removed to the extent necessary for the work. The work of removing and replacing pavement shall be performed in accordance with the regulations of the municipality and all Agencies having jurisdiction thereover, whichever is more restrictive.

Contractor must cut pavement on a straight line, with a gasoline or diesel powered saw, along its longitudinal or transversal lengths, before removal of the pavement. This cutting is necessary to obtain a good or perfect “appearance” when repaved. Contractor will not be permitted, by PRASA Engineer, to start removing pavement without performing this longitudinal or transverse cutting beforehand.

In order to minimize the grievances of the persons living or using the street, road or highways included in the project, the Contractor will not be permitted or allowed to remove more than 200 lineal meters of pavement at a time. An effective dust control program must be implemented in accordance with the section titled "Environmental Protection and Restoration" of the General Conditions.

3.3 PERMANENT RESTORATION OF PAVEMENT

A. The Contractor shall start the permanent replacement of streets or highway surface not later than five calendar days after the pipe line has been installed, tested and the excavation backfilled. Failure on

the part of the Contractor to start the permanent replacement of streets or roads pavement at the time specified shall give PRASA the right to call other contractors to perform replacement of streets or roads pavement at the expense of the Contractor. The work of repaving shall be performed in accordance with the regulations of the DTPW, HTA and other authorities having jurisdiction.

B. In accordance with regulations of the Department of Transportation and Public Works all works to be performed on any public roads shall comply with Public Law No. 7 of July 19, 1985 (Ley de Certificaciones). Since PRASA is the proponent agency to comply with this law, the Contractor is the responsible entity to enforce the compliance of this law and regulations as stated in plans and specifications.

C. If the Contractor removes more pavement than the specified, or makes removal necessary by reason of damage to pavement for which he is responsible, or, if by reason of such excess removal or damage, only a narrow strip of undamaged paving remains which must be removed, the Contractor shall replace the excess pavement removed at his own cost and expense. All excess material shall be promptly removed to such points as the Engineer may direct.

D. Types of asphalt pavement. Pavements shall be replaced equal in all respects to the standard specification and requirements of the DTPW and the HTA for the street, road or highway at the location were the work is being performed.

For municipal roads, in addition to DTPW and HTA requirements, Contractor shall always comply with municipal requirements and specifications.

E. Base and Sub-base Course. The Contractor shall provide a sub-base course of compacted granular material above the backfill material to receive the base course or the concrete pavement. The subgrade shall be constructed to the specified grade and cross section. The Contractor shall provide a black base course along trench excavations, up to the existing grade. The Contractor is responsible for maintaining the streets and roads in good conditions until the final wearing course is placed and approved by the Engineer and the DTPW Regional Officials. No change orders will be allowed for this concept.

F. The Contractor shall be responsible for providing the required compaction of the base course to avoid settlement of the pavement. In case of pavement failure and/or settlement, the Contractor shall replace the damaged pavement at his own expense.

G. Wearing Course. The wearing course wall be placed along streets, roads and highways, curb to curb or as required by the Engineer, after testing and approval of pipelines and manholes.

H. Cross Section of Restored Pavement: The pavement shall be restored following the requirements and cross sections shown in Figure 1. The Contractor shall perform any changes required to Figure 1, made by the DTPW or the Municipality having jurisdiction, at his own cost.

I. Maintenance. The Contractor shall provide maintenance to the streets, municipal and state roads, and highways to keep them in good condition until the final wearing surface is placed and approved by the Engineer, by the DTPW Regional Officials for state roads, and by the Municipal Officials for Municipal roads. No Change orders will be allowed for this concept.

J. Curb and Gutter Subgrade. The subgrade shall be tested for grade and cross section by means of a template extending the full width of the curb and gutter. The subgrade shall be of materials equal in bearing quality to the subgrade under the adjacent pavement.

K. Maintenance of Sidewalk, Curb and Gutter Subgrade. The subgrade shall be maintained in a smooth, compacted condition in conformity with the required section and established grade until the concrete is placed. The subgrade shall be in a moist condition when concrete is placed. The subgrade shall be prepared and protected to produce a subgrade free from frost when the concrete is deposited.

3.4 FORM SETTING FOR SIDEWALK, CURB AND GUTTER

Forms shall be set to the indicated alignment, grade and dimensions. Forms shall be held rigidly in place by a minimum of 3 stakes per form placed at intervals not to exceed 4 feet. Corners, deep sections, and radius bends shall have additional stakes and braces, as required. Clamps, spreaders, and braces shall be used where required to ensure rigidity in the forms. Forms shall be removed without injuring the concrete. Bars or heavy tools shall not be used against the concrete in removing the forms.

Any concrete found defective after form removal shall be promptly and satisfactorily repaired. Forms shall be cleaned and coated with form oil each time before concrete is placed. Wood forms may, instead, be thoroughly wetted with water before concrete is placed.

3.4.1 SIDEWALKS

Forms for sidewalks shall be set with the upper edge true to line and grade with an allowable tolerance of 3 mm (1/8 inch) in any 3 m (10 foot) long section. After forms are set, grade and alignment shall be checked with a 10 foot straightedge. Forms shall have a transverse slope as indicated in the Construction Drawings or as directed by the Engineer. Side forms shall not be removed for 12 hours after finishing has been completed.

3.4.2 CURB AND GUTTERS

The forms of the front of the curb shall be removed not less than 2 hours nor more than 6 hours after the concrete has been placed. Forms back of curb shall remain in place until the face and top of the curb have been finished, as specified for concrete finishing. Gutter forms shall not be removed while the concrete is sufficiently plastic to slump in any direction.

3.5 SIDEWALK CONCRETE PLACEMENT AND FINISHING

3.5.1 FORMED SIDEWALKS

Concrete shall be placed in the forms in one layer. When consolidated and finished, the sidewalks shall be of the thickness indicated. After concrete has been placed in the forms, a strike-off guided by side forms shall be used to bring the surface to proper section to be compacted. The concrete shall be consolidated with an approved vibrator, and the surface shall be finished to grade with a strike off.

3.5.2 CONCRETE FINISHING

After straightedging, when most of the water sheen has disappeared, and just before the concrete hardens, the surface shall be finished with a wood float or darby to a smooth and uniformly fine granular or sandy texture free of waves, irregularities, or tool marks. A scored surface shall be produced by brooming with a fiber-bristle brush in a direction transverse to that of the traffic, followed by edging.

3.5.3 EDGE AND JOINT FINISHING

All slab edges, including those at formed joints, shall be finished with an edger having a radius of 1/8 inch. Transverse joint shall be edged before brooming, and the brooming shall eliminate the flat surface left by the surface face of the edger. Corners and edges which have crumbled and areas which lack sufficient mortar for proper finishing shall be cleaned and filled solidly with a properly proportioned mortar mixture and then finished.

3.5.4 SURFACE AND THICKNESS TOLERANCES

Finished surfaces shall not vary more than 5/16 inch from the testing edge of a 10-foot straightedge. Permissible deficiency in section thickness will be up to 1/4 inch.

3.6 CURB AND GUTTER CONCRETE PLACEMENT AND FINISHING

3.6.1 FORMED CURB AND GUTTER

Concrete shall be placed to the section required in a single lift. Consolidation shall be achieved by using approved mechanical vibrators. Curve shaped gutters shall be finished with a standard curb "mule".

3.6.2 CURB AND GUTTER FINISHING

Approved slipformed curb and gutter machines may be used in lieu of hand placement.

3.6.3 CONCRETE FINISHING

Exposed surfaces shall be floated and finished with a smooth wood float until true to grade and section and uniform in texture. Floated surfaces shall then be brushed with a fine-hair brush with longitudinal strokes. The edges of the gutter and top of the curb shall be rounded with an edging tool to a radi.us of 1/2 inch. Immediately after removing the front curb form, the face of the curb shall be rubbed with a wood or concrete rubbing block and water until blemishes, form marks, and tool marks have been removed. The front curb surface, while still wet, shall be brushed in the same manner as the gutter and curb top. The top surface of gutter and entrance shall be finished to grade with a wood float.

3.6.4 JOINT FINISHING

Curb edges at formed joints shall be finished as indicated.

3.6.5 SURFACE AND THICKNESS TOLERANCES

Finished surfaces shall not vary more than 1/4 inch from the testing edge of a 10-foot straightedge. Permissible deficiency in section thickness will be up 1/4 inch.

3.7 SIDEWALK JOINTS

Sidewalk joints shall be constructed to divide the surface into rectangular areas. Transverse contraction joints shall be spaced at a distance equal to the sidewalk width or 5 feet on centers, whichever is less, and shall be continuous across the slab. Longitudinal contraction joints shall be constructed along the centerline of all sidewalks 10 feet or more in width. Transverse expansion joints shall be installed at sidewalk returns and opposite expansion joints in adjoining curbs. Where the sidewalk is not in contact with the curb, transverse expansion joints shall be installed as indicated. Expansion joints shall be formed about structures and features which project through or into the sidewalk pavement, using joint filler of the type, thickness, and width indicated.

3.7.1 SIDEWALK EXPANSION JOINTS

Expansion joints shall be formed with 3/8 inch joint filler strips. Joint filler shall be placed with top edge 1/4 inch below the surface and shall be held in place with steel pins or other devices to prevent warping of the filler during floating and finishing. Immediately after finishing operations are completed, joint edges shall be rounded with an edging tool having a radius of 1/8 inch, and concrete over the joint filler shall be removed. At the end of the curing period, expansion joints shall be cleaned and filled with a joint sealant approved by Engineer. The joint opening shall be thoroughly cleaned before the sealing material is placed. Sealing material shall not be spilled on exposed surfaces of the concrete. Concrete at the joint shall be surface dry and atmospheric at the time of application of joint sealing material. Excess material on exposed surfaces of the concrete shall be removed immediately and concrete surfaces cleaned.

3.7.2 REINFORCEMENT STEEL PLACEMENT

Reinforcement steel shall be accurately and securely fastened in place with suitable supports and ties before the concrete is placed.

3.08 CURB AND GUTTER JOINTS

Curb and gutter joints shall be constructed at right angles to the line of curb and gutter.

3.08.1 EXPANSION JOINTS

Expansion joints shall be formed by means of preformed expansion joint filler material cut and shaped to the cross section of curb and gutter. Expansion joints shall be provided in curb and gutter directly opposite expansion joints of abutting portland cement concrete pavement, and shall be of the same type and thickness as joints in the pavement. Where curb and gutter do not abut portland cement concrete pavement, expansion joints at least 1/2 inch in width shall be provided at intervals not exceeding 40. feet. Expansion joints shall be provided in nonreinforced concrete gutter at locations indicated. Expansion joints shall be sealed immediately following curing of the concrete or as soon thereafter as weather conditions permit. Expansion joints shall be sealed with joint sealant. The joint opening shall be thoroughly cleaned before the sealing material is placed. Sealing material shall not be spilled on exposed surfaces of the concrete. Concrete at the joint shall be surface dry and

atmospheric at the time of application of joint sealing material. Excess material on exposed surfaces of the concrete shall be removed immediately and concrete surfaces cleaned.

3.9 CURING AND PROTECTION

Curing and protection shall be as indicated in Section 033100 "Cast-In-Place Concrete".

3.10 FIELD QUALITY CONTROL

A. Sidewalk Subgrade. The subgrade shall be tested for grade and cross section with a template extending the full width of the sidewalk and supported between side forms.

B. Concrete. Concrete field quality control shall be as indicated in Section 033100 "Cast-In-Place Concrete".

C. Base, subbase and Pavement. Pavement, subbase and pavement field quality control shall be as indicated by the DTPW and the HTA.

D. Sidewalk, curb and gutter surface deficiencies and corrections. When measurements indicate that the completed concrete section is deficient in thickness by more than 1/4 inch the deficient section will be removed, between regularly scheduled joints, and replaced.

1. High Areas. In areas not meeting surface smoothness and plan grade requirements, high areas shall be reduced either by rubbing the freshly finished concrete with carborundum brick and water when the concrete is less than 36 hours old or by grinding the hardened concrete with an approved surface grinding machine after the concrete is 36 hours old or more. The area corrected by grinding the surface of the hardened concrete shall not exceed 5 percent of the area of any integral slab, and the depth of grinding shall not exceed 1/4 inch. Pavement areas requiring grade or surface smoothness corrections in excess of the limits specified above shall be removed and replaced.

2. Appearance. Exposed surfaces of the finished work will be inspected by the Engineer and any deficiencies in appearance will be identified. Areas which exhibit excessive cracking, discoloration, form marks, or tool marks or which are otherwise inconsistent with the overall appearances of the work shall be removed and replaced.

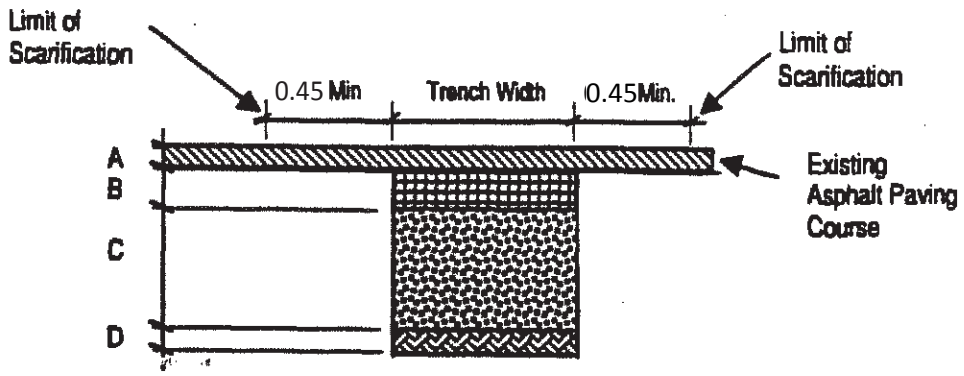

	Road Type			Material
	I	II	III	
A	2"	1.5"	1"	Hot Bituminous Mix Type S1 (75) Fine Aggregate
B	6"	4"	N/A	Hot Bituminous Mix Type B1 (75) Course Aggregate
C	12"	12"	N/A	Flowable Fill Base (See HTA Specifications)
D	Variable	Variable	Variable	Selected fill type A-1-a: Compacted Material Municipal Roads - See Notes

N/A - Not Applicable

For Municipal roads selected fill material must be suitable as determined by the Engineer and Municipal Authorities. If this material needs to be replaced as determined by Engineer .the Contractor shall replace it at no extra cost to PRASA.

For State roads the Contractor is responsible for performing compaction test of backfill material and shall submit the results of these tests to PRASA and to the DTPW for evaluation. Selected material shall be placed and compacted every 6" with portable compactor equipment. Compaction plated attached to excavation equipment will not be allowed. Acceptance by DTPW is conditioned to satisfactory results of these compaction tests.

Scarification limits are as shown on Construction drawings or as required by the DTPW. The detail shown above applies only when crossing is perpendicular to road. Scarification will be required by the DTPW for each lane affected if pipeline is installed along the State road.

If the project affects both sides of the State road scarification from edge to edge will be required.

All associated costs to the work specified herein shall be born by Contractor.

State and Municipal roads with concrete pavement shall be restored with 3,000 psi. compressive strength concrete, 8" minimum thickness. Black base will be substituted with selected and compacted material. The selected material shall be Class A-1a for State roads compacted to 95% of maximum density as per ASTM D-1557. For Municipal roads, the selected material may be the excavated material if it is suitable. This excavated material shall be compacted to 85 of maximum density as per ASTM D1557.

Figure 1.

SECTION 02C040
BITUMINOUS PAVEMENT FOR ACCESS ROAD AND PAVED AREAS

PART 1. GENERAL

1.01 SUMMARY

1.01.1 SECTION INCLUDES

This section includes furnishing all material, labor, tools, plant and equipment necessary for placing the bituminous pavement required for the access road and other paved areas, in accordance with the requirements of the Authorities having jurisdiction, including all incidental works required, as shown in the Construction Drawings or ordered by the Engineer.

1.02 WARRANTY

The Contractor shall guarantee the restoration of the access road and the paved surfaces for a period of one (1) year after the date of the Engineer's final inspection and acceptance.

Failure on the part of the Contractor to make good improper of defective work in this item shall give the Authority the right to call on other parties to correct defects or to make necessary repairs of damages at the expense of the Contractor, and such expense incurred shall be deducted from moneys due the Contractor under the provision of the CONTRACT attached hereto. If there is no money due the Contractor, the expense may be recovered from either the Contractor or the Bonding Company by means the Authority may consider proper.

PART 2. PRODUCTS

A. Bituminous pavements, base and subbase courses shall be equal in all respects to the standards specifications and requirements of the Department of Transportation and Public Works, Highway Authority, hereafter DTPW-HA, for the type required in the Construction Drawings.

PART 3. EXECUTION

3.01 CONSTRUCTION

A. The Contractor shall furnish all material, labor, tools, plant, equipment, and others necessary for placing the bituminous pavement required for the access road and other paved areas, in accordance with the requirements of the Authorities having jurisdiction, including all incidental works required, as shown in the Construction Drawings.

B. All work in connection with pavement shall he in accordance with the standards and requirements of the DTPW-HA.

SECTION 02D005
DEMOLITION (GENERAL)

PART 1. GENERAL

1.1 SUMMARY

1.01.1 SECTION INCLUDES

A. This section includes furnishing all labor, materials, equipment and incidentals required for demolitions, removal and disposal work shown in the Construction Drawing.

1.2 QUALITY ASSURANCE

A. Requirements of Regulatory Agencies: Comply with provisions of the Puerto Rico Building code and all applicable requirements for the type of demolition established by applicable regulatory Agencies.

1.3 PROJECT CONDITIONS

A. Protection

1. Contractor shall execute the demolition and removal work preventing damage or injury to structures, existing building services, electrical conduit and process piping, and other adjacent features which might result from falling debris or other causes, and so as not to interfere with the use free and safe passage to and from adjacent structures.

2. Closing or obstructing of roadway, adjacent to the work by the placement or storage of materials with a minimum interference to traffic on these ways.

3. Contractor shall erect and maintain barriers, lights, and other required protective devices.

4. Contractor shall repair damage done to facilities to remain, or to any property belonging to the PRASA.

5. Contractor shall design, erect, install and maintain temporary enclosures to eliminate dust, noise and debris from adjacent gallery or building spaces that are in use by PRASA personnel.

B. Scheduling. Contractor shall carry out his operations so as to avoid interference with operations by the PRASA.

C. Notification: at least 48 hours prior to commencement of a demolition or removal, Contractor shall notify the Engineer in writing of his proposed schedule for demolition. Engineer will inspect the existing equipment and identify those items which are to remain the property of the PRASA. No removals shall be started without permission of the Engineer.

D. Explosives.

1. Blasting and the use of explosives shall not be used to perform any demolition work or any other work.

PART 2. PRODUCTS

Not used.

PART 3. EXECUTION

A. General

1. Contractor and PRASA shall observe the following steps previous to the disposal of materials and equipment:

a) Contractor shall draft a list of the proposed materials and equipment to be disposed and submit to the Owner Representative. Contractor shall sort materials and equipment in categories as requested by PRASA, for inspection by PRASA.

b) PRASA shall evaluate and approve the disposal or retention of equipment or materials according to applicable internal procedures and regulations, including the Administrative Order OA-2012-01. PRASA shall instruct the Contractor which materials and equipment are approved for disposal. PRASA shall retain useful or recyclable equipment or materials.

c) Contractor shall dispose the indicated materials and equipment as specified in the Contract Documents.

d) PRASA shall witness and document disposal, as required by internal procedures and regulations.

2. All material and equipment removal from existing work shall become the property of the PRASA. All materials and equipment marked by the PRASA to remain their property shall be carefully removed by the Contractor, so as not to be damaged, cleaned and stored on the site, and delivered by the Contractor at the location designated by the Director of PRASA's nearest Regional Office. The Contractor shall coordinate this delivery with the Engineer and the Director of the nearest PRASA Regional Office. All equipment and materials marked by PRASA to remain their property shall be cleaned and disinfected to the satisfaction of Engineer before delivery to the PRASA Regional Office.

3. If demolition work includes a pump station, a water or sewer plant the Contractor shall prepare a list with the inventory of the equipment to be delivered to PRASA.

4. Contractor shall dispose off the site, and in conformance with all existing applicable laws and regulations, all demolition material, equipment, debris, and all other items not marked by the PRASA to remain their property.

5. Pollution Controls: use water sprinkling, temporary enclosures, and other suitable methods to limit the amount of dust and dirt rising and scattering in the air to the lowest practical level. Comply with governing regulations pertaining to environmental protection.

    a) Do not use water when it may create hazardous or objectionable conditions such as flooding and pollution.

    b) Clean adjacent structures, facilities, and improvements of dust, dirt, and debris caused by demolition operations. Return adjacent areas to conditions existing prior to the start of the work.

B. Structural Removals

1. Contractor shall remove structures to the lines and grades shown unless otherwise directed by the Engineer. Where no limits are shown, the limits shall be 4 inches outside the item to be installed. The removal of masonry beyond these limits shall be at the Contractors expense and these excess removals shall be reconstructed to the satisfaction of the Engineer with no additional compensation to the Contractor.

2. All concrete, concrete block, reinforcement, structural or miscellaneous metals, wire mesh and other items contained in or upon the structure shall be removed and taken from the site, unless otherwise approved by the Engineer. Demolished items shall not be used in backfill adjacent to structures or in pipe line trenches.

C. Mechanical Removals

1. Mechanical removal shall consist of dismantling and removing of existing piping, equipment and other appurtenances, including motors, pumping units, valves and fittings, as specified, shown, or required for the completion of the work. It shall include cutting, capping, and plugging as required.

2. Existing piping not required for the new work shall be removed where shown or where it will interfere with new work. Piping not indicated to be removed or which does not interfere with new work shall be removed to the nearest solid support, capped and left in place. Where piping that is to be removed passes through existing walls, it shall be cut off and properly capped on each side of the wall.

3. When underground piping is to be altered or removed, the remaining piping shall be promptly capped. Abandoned underground piping may be left in place unless it interferes with new work or is shown or specified to be removed.

4. Any changes to potable water piping shall be made in conformance with all applicable codes and under the same requirements as other underground piping. All portions of the potable water system that have been altered or opened shall be pressure tested and disinfected in accordance with local codes.

D. Electrical Removals

1. Electrical removals shall consist of the removal of existing conduits and wires, lighting fixtures, and miscellaneous electrical equipment all as shown, specified, or required to perform the work.

2. All existing electrical equipment and fixtures to be removed shall be removed with such care as may be required to prevent unnecessary damage, to keep existing system in operation and tonkeep the integrity of the grounding system.

3. Conduits and wires shall be abandoned or removed where shown. All wires in abandoned conduits shall be removed, salvaged, and stored. Abandoned conduits concealed in floor or ceiling slabs, or in walls, shall be cut flush with the slab or wall at point of entrance. The conduits shall be suitably plugged and the area repaired in a flush, smooth, approved manner. Exposed conduits and their supports shall be disassembled and removed from the site. Repair all areas of work to prevent rust spots on exposed surfaces.

4. Lighting fixtures shall be removed or relocated as shown. Fixtures not relocated shall be removed
from the site. Relocated fixtures shall be carefully removed from their present location and rehung where shown.

5. Wall switches, receptacles, starters and other miscellaneous electrical equipment, shall be removed and disposed off the site as required. Care shall be taken in removing all equipment so as to minimize damage to architectural and structural members. Any damage incurred shall be repaired.

E. Alterations and Closures

1. Alteration shall conform to all applicable specifications, the Drawings, and the directions and approvals of the Engineer.

2. Where alterations require cutting or drilling into existing floors, walls and roofs the holes shall be repaired in an approved manner. Contractor shall repair such openings with the same or matching materials as the existing floor, wall, or roof or as otherwise approved by the Engineer. All repairs shall be smoothly finished unless otherwise approved by the Engineer.

3. Openings existing concrete slabs, ceilings, masonry walls, floors and partitions shall be closed and sealed as shown or otherwise directed by the Engineer. In general, the same or matching materials as the existing adjacent surface shall be used. The finished closure shall be a smooth, tight, sealed, permanent closure acceptable to the

Engineer.

4. Demolition shall be the breaking up, cutting, filling of any holes resulting, final grading of the area, performing any other operations required, and the removal from the site of all structures and equipment (structures, substructures, floor slabs, equipment, tanks, pipes, fittings, electrical systems, light poles, wiring, underground conduits and wiring, isolated slabs, and sidewalks) as indicated on the Drawings. All pieces of concrete, metal, and any other demolished material shall be removed to a depth of at least 2-feet below existing grade. Broken pieces of concrete may be size reduced by an on-site crusher, but in any event must be removed from the project site.

5. Before commencing structural demolition, remove all mechanical, electrical, piping, and miscellaneous appurtenances. Completely remove the structure by thoroughly breaking up concrete into pieces no more than 2-feet across the largest dimension.

6. Once demolition works are concluded contractor shall install topsoil cover with a minimum thickness of 6-inches. Additionally contractor shall provide vegetative cover in accordance with Section 02D020: Landscaping & Planting.

F. C**lean-up.** Contractor shall remove from the site all debris resulting from the demolition operations as it accumulates. Upon completion of the work, all materials, equipment, waste, and debris of every sort shall be removed and premises shall be left, clean, neat and orderly.

G. Attachments

1. Administrative Order OA-2012-01

AAA-376

Autoridad de Acueductos y Alcantarillados

ESTADO LIBRE ASOCIADO DE PUERTO RICO

OFICINA DEL PRESIDENTE EJECUTIVO

ORDEN ADMINISTRATIVA

NÚMERO: OA-2012-01

DISTRIBUCIÓN: D

FECHA: 22 de diciembre de 2011

ASUNTO: PARA ESTABLECER UN PROCESO EXPEDITO PARA LA DISPOSICIÓN DE LA PROPIEDAD MUEBLE Y DEJAR SIN EFECTO LAS SECCIONES DEL PROCEDIMIENTO 570 – "DISPOSICIÓN DE PROPIEDAD EXCEDENTE" APLICABLES A LA DISPOSICIÓN DE LA PROPIEDAD MUEBLE

PROPÓSITO:

Se nos ha presentado una preocupación sobre la gran cantidad de propiedad inservible (chatarra) ubicada en las instalaciones de la Autoridad en la actualidad. Dicha situación pudiera representar un problema de salud ambiental, de seguridad en el área de trabajo y pudiera estar sujeta a señalamientos de las agencias reguladoras que requiere se actué de inmediato y se disponga de dicha propiedad de una forma expedita. Es por esta razón que emito esta Orden Administrativa para establecer un proceso expedito, pero con los controles necesarios que permita la disposición de la propiedad mueble excedente especialmente chatarra, ubicada en las instalaciones de la Autoridad en cumplimiento con la Ley.

DISPOSICIONES GENERALES:

1. Los Directores Ejecutivos Regionales mediante el formulario que se incluye como parte de esta Orden Administrativa (Anejo A) dirigido al Encargado de la Propiedad identificarán la propiedad excedente que tiene en su región y solicitarán se disponga la misma. Dicho formulario deberá ser completado en todas sus partes y certificado por todos los funcionarios que *allí* se indica.

2. El Encargado de la Propiedad recibirá los formularios e inspeccionará físicamente la propiedad considerada excedente para determinar si la misma se considera utilizable[1] o completamente inservible[2] y emitirá la correspondiente certificación. Dichos formularios debidamente certificados serán referidos al Comité de Propiedad Excedente.

[1] Utilizable - material o equipo que es nuevo o usado, pero reparable.
[2] Inservible - material o equipo que no se puede continuar utilizando porque su condición física o mecánica está deteriorada y es muy costosa o imposible su reparación y se puede vender o se debe destruir.

3. El Comité de Propiedad Excedente recibirá los listados de la propiedad debidamente certificada por el Director Ejecutivo Regional y el Encargado de la Propiedad, declarará la propiedad excedente si así procede y recomendará la forma en que se dispondrá de la propiedad:

   a. Propiedad utilizable – Primero se asegurará que ninguna otra oficina o región tiene utilidad para la propiedad. De no existir esa utilidad entonces, se dispondrá conforme lo dispuesto en la Ley Núm. 164 de 23 de julio de 1974, según enmendada, mejor conocida como la Ley de Administración de Servicios Generales[3].

      1) Se dispondrá la propiedad pública declarada excedente:

         a) Ofrecer a toda agencia de la Rama Ejecutiva o municipio al valor justo en el mercado.

         b) Aquella propiedad de uso agrícola o que se utilice para el ejercicio de las artes industriales o que pueda ser de beneficio en las labores de pesca o ser de beneficio para la transportación pública de pasajeros, mediante venta, de manera preferente y por el justo valor en el mercado a todo agricultor, acuicultor, avicultor, artesano, pescador y porteador público autorizado por la Comisión de Servicio Público.

         c) Computadoras en buenas condiciones serán donadas al Departamento de Educación de Puerto Rico[4]

         d) Público en general mediante subasta pública.

   b. Propiedad inservible (chatarra) - material del cual este hecho la cosa sea reciclado.

      1) La Oficina de Compras y Logística preparará un ámbito de trabajo y llevará a cabo un proceso de competencia para invitar a los Centros de Acopio autorizados por la Autoridad de Desperdicios Sólidos según el material que se vaya a disponer. Una vez seleccionados los Centros de Acopio coordinará para el recogido la propiedad.

      2) El recogido de la propiedad se hará en presencia del Encargado de la Propiedad y de la Oficina de Auditoría Interna, quienes prepararán un acta donde se incluirá toda la información necesaria para verificar la disposición de dicha propiedad. El acta debe ser firmada por los funcionarios antes indicados y por la persona que estuvo a cargo de la disposición.

[3] El Artículo 16 de la ley citada, dispone que las corporaciones públicas, como lo es la Autoridad, debe adoptar normas similares a las establecidas en el subinciso 19 de dicho artículo.
[4] Ley Núm. 237 de 3 de noviembre de 2006.

c. Propiedad inservible (no chatarra) – material que no se puede reciclar.

1) El Encargado de la Propiedad hará los arreglos y se encargará de disponer de dicha propiedad en los vertederos u otros centros de disposición debidamente autorizados.

2) La disposición de la propiedad se hará en presencia del Encargado de la Propiedad y de la Oficina de Auditoría Interna, quienes prepararán un acta donde se incluirá toda la información necesaria para verificar la disposición de dicha propiedad. El acta debe ser firmada por los funcionarios antes indicados y por la persona que estuvo a cargo de la disposición.

DEROGACIÓN:

Mediante esta Orden Administrativa se deja sin efecto las secciones del Procedimiento 570 – "Disposición de Propiedad Excedente" aplicables a la disposición de la propiedad mueble.

VIGENCIA:

Esta Orden Administrativa tendrá vigencia desde su aprobación y hasta que se apruebe un nuevo procedimiento para la disposición de propiedad mueble excedente.

APROBADA POR:

Ing. José F. Ortiz Vázquez
Presidente Ejecutivo

20 de enero de 2012
Fecha de Aprobación

AAA-5-D
(Rev. 12/11)

Estado Libre Asociado de Puerto Rico
AUTORIDAD DE ACUEDUCTOS Y ALCANTARILLADOS
DECLARACIÓN DE PROPIEDAD EXCEDENTE

ANEJO A - OA-2012-01
Página ____ de ____

Declaración Núm. _____

REGIÓN: _____
ÁREA: _____

Localización	Número de Propiedad o de Serie	Descripción	Procedencia	Valor estimado	Condición		Observaciones
					Utilizable 1	Inservible 2	

1) Utilizable - material o equipo que es nuevo o usado, pero reparable.
2) Inservible - material o equipo que no se puede continuar utilizando porque su condición física o mecánica esta deteriorada y es muy costosa o imposible su reparación y se pueda vender o se debe destruir.

CERTIFICO que la información relacionada con la propiedad arriba detallada es correcta, que dicha propiedad resulta excedente a las necesidades de la AAA, por lo que solicito sea declarada excedente, sea dada de baja de los libros y se disponga según corresponda.

Funcionario a cargo de la Instalación

Nombre _____ Firma _____

Fecha _____

CERTIFICO que la información ofrecida por el funcionario arriba identificado en esta declaración es correcta por lo cual autorizo dicha declaración.

Director(a) Auxiliar de Área

Firma _____

Nombre _____

Fecha _____

Director(a) Ejecutivo Regional

Firma _____

Nombre _____

Fecha _____

CERTIFICO que examiné la propiedad objeto de esta declaración y su condición es tal como se indica por lo que recomiendo la baja solicitada.

Encargado(a) de la Propiedad

Nombre _____ Firma _____

Fecha _____

CERTIFICO que contabilicé la baja en los libros de la propiedad arriba detallada.

Nombre _____ Firma _____

Fecha _____ Puesto _____

AUTORIDAD DE ACUEDUCTOS Y ALCANTARILLADOS

DECLARACIÓN DE PROPIEDAD EXCEDENTE

ANEJO A - OA-2012-01

Página ____ de ____

(continuación)

Declaración Núm. _____

REGIÓN: _____

ÁREA: _____

Localización	Número de Propiedad o de Serie	Descripción	Procedencia	Valor estimado	Condición		Observaciones
					Utilizable 1	Inservible 2	

SECTION 02D011
SITE CLEARING AND GRUBBING

PART 1. GENERAL

1.01 SUMMARY

1.01.1 SECTION INCLUDES

A. This section includes the clearing and grubbing of the areas shown on the plans, areas indicated in the specifications and areas ordered by the Engineer.

B. This section involves site clearing work including, but not limited to:

1. Removal of trees and other vegetation.
2. Topsoil stripping.
3. Clearing and grubbing.

C. This section also includes the segregation, processing, hauling, and final disposal of all debris and waste material generated during the site clearing work, including but not limited to trash, demolished structures, removed trees, vegetative material, and unsuitable and excess topsoil. Disposal will be in authorized sites, all in accordance with applicable regulations for disposal and recycling.

1.02 REFERENCES

A. "Capítulo 47 – Corte, Poda y Forestación para Puerto Rico del Reglamento Conjunto para Obras de Construcción y Usos de Terrenos, del 29 de noviembre de 2010 de la Oficina General de Permisos (OGPe). "

B. "Ley Num. 411, del 8 de octubre de 2000, Ley para la Reducción y Reciclaje de los Desperdicios Sólidos."

C. "Reglamento Número 6825 para la Reducción, Reutilización y Reciclaje de Desperdicios Sólidos."

1.03 DEFINITIONS

A. Topsoil: Topsoil is defined as friable clay loam surface soil found in a depth of not less than 4". Satisfactory topsoil is reasonably free of subsoil, clay lumps, stones, and other objects over 2" in diameter, and without weeds, roots, and other objectionable material.

B. Clearing: Removal of interfering or objectionable material, trees, and vegetation lying on or protruding above ground surface.

C. Grubbing: Removal of vegetation and other organic matter including stumps, buried logs, and roots. All roots 2 inches or larger in diameter shall be removed to a depth of 2 feet below the surface and 1 foot below the finished elevation of graded areas.

D. Scalping: Removal of sod without removing more than the upper layer of topsoil.

E. Stripping: Removal of topsoil remaining after applicable scalping is completed.

1.04 PROJECT / SITE CONDITIONS

1. **Traffic.** Conduct site clearing operations to ensure minimum interference with roads, streets, walks, and other adjacent occupied or used facilities. Do not close or obstruct streets, walks or other occupied or used facilities without permission from authorities having jurisdiction.
2. **Protection of Existing Improvements.** Provide protections necessary to prevent damage to existing improvements indicated to remain in place.
3. Protect improvements on adjoining properties and on owner's property.
4. Restore damaged improvements to their original condition, as acceptable to parties having jurisdiction.

5. **Improvements on Adjoining Property.** Authority for performing removal and alteration work on property adjoining Owner's property will be obtained by owner prior to award of contract. The extent of work on adjacent property is indicated in the Construction Drawings.

PART 2. PRODUCTS

A. All products shall be as specified, indicated in the Construction Drawings and/or as required by Engineer to complete the specified work.

PART 3. EXECUTION

A. Site Clearing.

1. The extent of site clearing is shown on Construction Drawings or as needed for construction.
2. **General.** Contractor shall clear and grub the areas of all trees, stumps, brush, and other vegetation, down timber, rotten wood, rubbish, large boulders, and other objectionable material interfering with installation of new construction. It shall include, but not limited to, remaining buildings, fence, lumber, trash piles and other obstructions interfering with the proposed work; necessary segregation and processing for disposal; disposing of the debris and waste material product of the site clearing work; and furnishing of equipment, labor and materials as needed to complete the work. Removal includes digging out stumps and roots. Disposal includes the necessary segregation, processing or recycling, hauling and final disposal of all debris or waste material resulting from the site clearing work, in accordance with best practices and applicable regulations. All tipping fees and all other costs associated to site clearing work are responsibility of the Contractor.
3. Carefully and cleanly cut roots and branches of trees indicated to be left standing, where such roots and branches obstruct new construction.
4. No open burning of any kind of material will be permitted on the site.
5. **Felling of Trees.** All trees shall be felled within the area to be cleared, except as indicated in the plans or directed by Engineer. Where the tree limb structure interferes with utility wires, or where the trees to be felled are in close proximity to utility wires, the trees shall be taken down in sections to eliminate the possibility of damage to the utility.
6. Strip Topsoil to whatever depths encountered in a manner to prevent intermingling with underlying subsoil or other objectionable material. The stripped off topsoil shall be stock piled at the place of places indicated by the engineer. Stockpile side-slopes shall be not less than three horizontal to one vertical. The top and side-slopes of each top – soil stockpile shall be moved at regular intervals and as directed by the engineer to minimize the growth which would deplete the nutrient level of the topsoil.
7. Remove heavy growths of grass from areas before stripping.
8. **Protection and Restoration.** Contractor shall coordinate the work as required by laws and regulations.

   a) The Contractor shall prevent damage to existing pipes, conduits, wires, cables or structures above or below ground. No land monument, property marker, or official datum points shall be damaged or removed until an authorized agent has witnessed or otherwise referenced their location and approved their removal.

   b) In order to minimize damage to trees that are to be left standing, trees to be removed shall be felled toward the center of the area being cleared if so required by Engineer. In addition, stop topsoil stripping a sufficient distance to prevent damage to main root system. When necessary to prevent damage to structures, other trees or property, or to minimize danger to traffic, trees shall be cut in sections from the top downward.
9. **Trees to remain.** The trees indicated in the plans that are to remain, or otherwise directed by Engineer, shall be pruned of undesirable wood and the resulting crown shaped to the natural form of the kind of tree and as approved. All branches interfering with or hindering the healthy growth of the tree shall be removed. All diseased branches and all dead branches 2.5 centimeters or more in diameter shall be removed. Any branch which may be partially dead, yet has a healthy lateral branch at least one-third the diameter of the parent branch shall be removed beyond the healthy branch. All stubs or improper cuts resulting from former pruning shall be removed.

All cuts shall be cleanly made with sharp tools, flush with parent trunk or limb, and all large bark wounds shall be scar traced to the satisfaction of the engineer. All waste materials generated from tree pruning shall be processed and hauled to a site authorized for final disposal.

10. Tree wounds, cuts or scars resulting from the Contractor's operations shall be carefully dressed in accordance with accepted horticultural practice.

11. Stockpile topsoil in storage piles in areas shown, or where directed. Construct storage piles to freely drain surface water. Cover storage piles if required to prevent wind-blown dust.

12. Dispose of unsuitable or excess topsoil same as waste material, herein specified.

13. Clearing and grubbing: Clear site of trees, shrubs and other vegetation, except for those indicated to be left standing.

14. Completely remove stumps, roots, and other debris protruding through ground surface.

15. Use only hand methods for grubbing inside drip line of trees indicated to be left standing.

16. Fill depressions caused by clearing and grubbing operations with satisfactory soil material unless further excavation or earthwork is indicated.

17. Place fill material in horizontal layers not exceeding 6" loose depth, and thoroughly compact to a density equal to adjacent original ground.

18. All work under this section shall be performed in a manner which will cause a minimum of soil erosion and shall comply with the CES Plan. Failure on the part of the Contractor to perform the required erosion control measures will be just cause for the Engineer to direct suspension of the clearing and grubbing operations.

19. Temporary Removal and Replacement of Interfering Plantings

a) Remove and store shrubs and trees that are not designated for removal but do interfere with construction or could be damaged by construction activities.

b) Photograph and document location, orientation, and condition of each plant prior to its removal. Record sufficient information to uniquely identify each plant removed and to assure accurate replacement.

B. Disposal of Debris and Waste Materials.

1. Removal from project site: Remove and haul all debris, waste materials, and refuse generated from the site clearing work, including but not limited to removed trees, vegetative material, trash, demolished structures; as well as unsuitable and excess topsoil resulting from site clearing work from project site to an authorized final disposal or recycling site.

2. Segregation and processing of waste material: Execute the necessary segregation and processing for final disposal or recycling of debris and waste material generated during the site clearing work, including but not limited to furnishing of equipment, labor, and materials.

3. Final disposal: Transport all debris and waste material resulting from the site clearing work to an authorized site for final disposal or recycling, in accordance with best practices and applicable regulations. Contractor will make available to Engineer and/or regulatory agencies, all documentation pertaining to such final disposal, attesting disposal in compliance with regulations.

4. No debris or waste material of any kind shall be deposited in any stream or body water, or in any street or alley, or upon any private property, or buried in any onsite area, except by written consent of Engineer. The refuse resulting from the site clearing work shall be hauled to a waste site secured by the contractor and shall be disposed of in such a manner as to meet all requirements of federal, local and municipal laws and regulations regarding health, safety, and public welfare. In no case shall any material be left on the project, shaved onto abutting private properties, or be buried in embankments or sewer trenches on the project.

END OF SECTION

SECTION 02D020
LANDSCAPING & PLANTING

PART 1. GENERAL

1.01 SUMMARY

1.01.1 SECTION INCLUDES

This section includes furnishing all labor, materials, equipment and appurtenances required to perform completely and satisfactorily fine grading, fertilizing, seeding/sodding of all graded, cleared and disturbed areas and preparation, planting and maintenance of all landscape planting as shown in the Construction Drawings and as herein specified.

1.01.2 SUBMITTALS

A. The Contractor shall furnish a statement from the seed supplier certifying compliance with this specification before the seed is delivered to the site.

PART 2. PRODUCTS

2.01 MATERIALS

A. Topsoil

1. Shall be natural, friable soil, possessing characteristics of representative soils in the vicinity, which produce heavy growths of grass crops. It shall be obtained from naturally well-drained areas, shall be reasonably free of sub-soil, brush, objectionable weeds and other litter and shall be free from toxic substances, clay lumps, stones, roots or other objects larger than 1-inch in diameter, or any other material which might be harmful to plant growth or be a hindrance to grading, planting, and maintenance operations.

2. Minimum/maximum pH values shall be 5.5 and 8.0 respectively. Topsoil shall be tested in accordance with the standards of the Association of Official Agricultural Chemists at no expense to the Authority.

3. Topsoil shall contain a minimum/maximum of 2.0 and 10.0 percent organic matter.

4. Topsoil shall be in accordance with the following grading requirements:

Sieve Designation	Percentage by weight Passing Square Mesh Method
1”	100
No. 4	97 - 100
No. 10	80 - 100

Particle Sizes	
Sand	0.074 of a millimeter (#200 sieve) to 2 millimeters (#10 sieve)
Silt	0.005 of a millimeter to 0.074 of a millimeter (#200 sieve)
CLAY	0.005 of a millimeter or less

Proportions		
Sand	20%	75%
Silt	10%	60%
Clay	5%	30%

5. Prior to stripping, topsoil shall have demonstrated, by the occurrence upon it of healthy vegetation, that it is of good quality and reasonably free draining.

6. The Contractor shall provide materials to improve the pH, organic matter or other quality of on-site topsoil as may be required by the Engineer

B. Fertilizer

1. Shall be the product of an approved commercial fertilizer manufacturer and shall be 10-10-10 or 20-20-20 formula in conformance with all Commonwealth and Federal regulations and applicable Puerto Rico Fertilizer laws.

2. Commercial fertilizer shall provide the minimum percentage of available nutrients as specified. The Engineer will take such samples that he deems necessary for testing. In addition, the Contractor shall furnish an affidavit from the vendor, or from a testing laboratory with the

guaranteed analysis as to the available nutrients contained therein. The Engineer will verify the content of available nutrients.

3. Fertilizer shall be furnished in new, clean, sealed and properly labeled bags.

4. Fertilizer failing to meet the specified analysis may be used as determined by the Engineer providing sufficient materials are applied to comply with the specified nutrients per unit of measure without additional cost to the Authority.

5. Any fertilizer which becomes caked or otherwise damaged making it unsuitable for used, will not be accepted.

6. A liquid form of fertilizer containing the minimum percentage of available nutrients may be used if and when specified.

C. Lime

1. Agricultural limestone shall be a calcic or dolomitic ground limestone containing not less than 85 percent of total (Calcium and Magnesium) carbonates. Limestone shall conform to the standards of the Association of Official Agricultural Chemists and shall comply with all existing State and Federal regulations.

2. Rates of application shall be as shown on the plans or in the Special Provision.

3. Limestone shall meet the following sieve analysis: At least 40 percent passing a No.100 sieve, and at least 85 percent passing a No. 10 sieve.

D. Seed

1. All seed used shall be labeled in accordance with U.S. Department of Agriculture rules and Regulations under the Federal Seed Act. Only one type of grass will be permitted for use on this project, The type shall be as for sod in Section E.

2. Grass Seed shall be fresh stock, pure, live, hulled seed furnished in sealed standard containers, labeled and delivered to the job-site far enough in advance of time for use to permit sampling and testing by the Engineer.

3. The Contractor shall furnish a statement from the seed supplier certifying seed test and results within 6 months of delivery date. Information furnished shall include all pertinent data for each lot of seed.

4. Seed which has become wet, moldy, or otherwise damaged in transit or storage will not be acceptable.

5. Types of seed or seed mixtures shall be as shown in the Special Provisions of the U.S. Department of Agriculture Rule and Regulations under the Federal Seed Act.

E. Sod

1. Shall be San Agustin (Stenotaphrum secundatum) grass, Bermuda (Cynodon Dactilon) grass or Ciempies (Eremochloa Othiuroldes) grass, reasonably free of crab grass, quack grass, dandelion, plantain, orchard grass, timothy or other undesirable growth. The Contractor may at his option place any of the three grasses, if no specific type is required.

2. Sod growth more than three (3) inches in height shall be mowed to a height of three inches not more than 5 days prior to lifting.

3. The sod shall be cut into rectangular sections, which may vary in length but shall be of equal width, to a depth equal to the growth of the roots, but in no case less than 5 centimeters. Sections or strips shall be of a size that will permit them to be lifted without breaking. Longer sections, as a rule, will be permitted in clay topsails and shorter sections will be required in soils containing a high percentage of sand. Sections shall be cut away below the root line with an acceptable sod cutter or sharp, flat spade. Sections shall be rolled in tight rolls or laid flat on boards or planks and lifted and transported to storage piles or carried to the point of installation without breaking. In all cases sod must be lifted and loaded or unloaded by hand. Dumping from, vehicles will not be permitted.

4. While in temporary storage, sod shall remain in tight rolls or shall be placed grass to grass or roots to roots. The stacked rolls or piled layers shall be sprinkled with water and covered with moist burlap, straw, or other acceptable material when and as directed by the Engineer. Any sod permitted by the Contractor to dry out will be rejected whenever in the judgment of the Engineer, its survival after placing has been rendered doubtful. in no case shall temporary storage be permitted for more than 5 days, and sod broken in transit or stored beyond this time limit may be rejected by the Engineer.

F. Mulch

1. Mulch shall consist of wood cellulose fiber, peat moss, “cachaza”’ or other approved material.

2. “Cachaza” shall be cane sugar factory refuse, which shall have been aerated for not less than one (1) year.

3. Wood Cellulose Fiber. Natural wood cellulose fiber shall have the property of dispersing readily in water and shall have no toxic effect when combined with seed or other materials. The homogeneous slurry or mixture shall be capable of application with power spray equipment. A colored dye, which is non-injurious to plant growth, may be used when specified.

4. Peat Moss. Peat moss shall be provided in bales. Peat moss shall be a granulated sphagnum peat moss nearly free from woody substances, consisting of at least 75 percent of partially decomposed stems and leaves of sphagnum and essentially brown in color. The texture may vary from porous fibrous to spongy fibrous and shall be free of sticks, stones, and mineral matter. Peat moss shall be in an air-dry condition, shall show an acid reaction of 3.5 pH to 5.5 pH, and shall otherwise conform to Commonwealth and Federal regulations.

G. Erosion Control Net Materials

1. All erosion control materials shall be made of new material, clean, sound, free of rips or tears, and furnished in lengths of at least 20 feet.

a) Burlap. Burlap shall be of standard weave with a weight of 3.5 to 5.0 ounces per square yard.

b) Jute Mesh. Jute mesh shall be of a uniform, plain weave with warp and weft yams of approximately the same size. The physical requirements shall be:

Width-45" to 48", plus or minus I"

78 warp ends per width

41 weft ends per yard

Range in weight of cloth: 1.80 lb. (average) per running yard with a 5% minimum tolerance to 1.22 lb. (average) per running yard with a 5% minimum tolerance at standard atmospheric conditions.

H. Miscellaneous Materials

Water used in the planting or care of vegetation shall be free from oil, acids, alkalis, salts or any substance injurious to plant life. Water from streams, lakes, ponds or similar sources shall not be used unless approved by the Engineer.

PART 3. EXECUTION

3.01 CONSTRUCTION

A. The Contractor shall furnish all labor, materials, equipment and appurtenances required to perform completely and satisfactorily fine grading, fertilizing, seeding and sodding of all graded, cleared and disturbed areas and preparation, planting and maintenance of all landscape planting as shown in the Construction Drawings and as herein specified.

B. Seeding. The Contractor shall employ a method of sawing satisfactory to the Engineer, making use of approved mechanical power-drain drills or seeders, mechanical hand seeders or other approved methods. When drills are used, provisions shall be made by markers or other strips will overlap or be separated by a space not greater the space between rows planted by the equipment being used. If inspection, during planting operations or after there is a show of green, indicates that strips wider than the spaces between the rows planted have been left unplanted, or that other areas have been skipped, the Engineer may require the sawing of additional seed on these areas. When conditions are such, by reason of drought high winds, excessive moisture, or other factors, that satisfactory results are not likely to be obtained, the Engineer will Stop the work and it shall be resumed only when, in his opinion, conditions are favorable.

Seed shall be broadcast either by hand or approved sowing equipment at the rate of 4 pounds per 1,000 square feet. The seed shall be uniformly distributed over the designated areas and shall be

covered to a depth of 1/8 inch by means of a brush harrow, spike-tooth harrow, chain harrow, culti-packer, or other approved devices. Broadcast seeding shall not be done during windy weather. Drill seeding shall be done with approved equipment best suited to perform the work under the conditions existing at the site.

After the seeding has been completed, the surface shall again be cleaned of all stones larger than 2 inches in diameter and of all roots, brush, trash, or other objects that may interfere with maintenance operations.

C. Sodding. Sod shall be laid with close, tight joints on a smooth bed, leveled up with screened topsoil to prevent voids. After the sod has been laid and pegged where required, it shall be rolled and thoroughly watered.

Sod shall be laid on all slopes steeper than 2 to 1. In ditch areas, sod shall be laid diagonally with the slope of the ground, with broken joints. Each strip of sod shall be staked in place, the stakes being driven flush with the surface after completion of tamping or rolling operations. Stakes shall be at least 20 centimeters in length and have cross-sectional area not greater than 6.5 square centimeters; spaced at least two per strip or as directed by the Engineer.

All sodded areas disturbed by the Contractor shall be fertilized with commercial fertilizer (10-6-4) at a rate of 10 pounds per 1000 square feet; over-seeded with grass seed of the same mixture specified in 2.01 D titled "Seed" at the rate of 2 pounds per 1000 square feet and top-dressed with screened topsoil. Sodded areas shall then be rerolled and thoroughly watered.

D. Tillage. After top-soiled areas required to be seeded have been brought to the grades shown on the plans and as specified, they shall be thoroughly tilled to a depth of 4 inches by approved methods until condition of the soil Is acceptable to the Engineer. Any objectionable undulations or irregularities in the surface resulting from tillage or other operations shall be removed before planting operations are begun. The work shall be performed only during periods when satisfactory results are likely to be obtained. When conditions are such, by reason of drought, excessive moisture or other factors, that results are not likely to be satisfactory, the Engineer will stop the work and It shall be resumed only when, In his opinion, the desired results are likely to be obtained.

E. Application of Fertilizer. Fertilizer shall be distributed uniformly, at a rate of not less than 10 pounds per 100 square meters for 20-20-20 formulation, or not less than 20 pounds per 100 square meters for 10-10-10 formulation, over the areas to be seeded and shall be incorporated into the soil to a depth of 4-inches by methods approved by the Engineer. The incorporation of fertilizer may be accomplished as part of the tillage operations specified above. Distribution of seed and fertilizer together by means of approved equipment will be acceptable. Urea-formaldehyde shall be applied at the rate of 400 pounds per acre.

F. Application of Lime. Prior to the incorporation of the fertilizer lime shall be distributed at a rate of 100 pounds per 1,000 square feet or at such rate as determined by soil tests. Shall be incorporated into the soil to a depth of 4 inches by methods which are acceptable to the Engineer. The incorporation of lime along with the fertilizer may form a part of the tillage operation specified above, provided grass seed is not included in the mixture. One half of the rate shall be applied to the sub-soil before spreading the topsoil and the remainder after topsoiling.

G. Application of Mulch. The mulch shall be spread uniformly in a continuous blanket so that not more than 10 percent of ground surface is exposed using 2 tons per acre. The mulch shall be anchored in place by the application of asphalt material at the rate of 0.10 to 0.40 gallon per square yard. A method of applying mulch and asphalt stabilizer simultaneously by special equipment designed for the purpose will be acceptable. Mulching may be secured by other approved methods not considered detrimental to future maintenance. Mulching shall be started at the windward side, and shall continue uniformly until the area is completely covered.

H. Erosion Control Net Material. Supply and install will be as required and as directed by the Engineer.

I. Maintenance of Seeded or Sodded Areas

1. The acceptability of plant material furnished and planted as specified shall be determined at the end of a period of establishment of 60 calendar days, during which the Contractor shall employ all possible means to preserve the plants in a healthy growing condition.

2. Care during the establishment period shall include watering, cultivating, pruning, repair and adjustment of guys and stakes, and such other work as ordered by the Engineer. Dead or unsatisfactory plants shall be promptly removed and replaced.

3. A semi-final inspection by inspection by the Contractor and the Engineer will be held to determine the acceptability of the plant material five days before the end of the plant establishment period.

4. The Contractor shall protect seeded areas against traffic by warning signs or barricades, as approved by the Engineer. The Contractor shall repair, at his own expense, any damage to seeded areas caused by pedestrian or vehicular traffic or other causes.

5. The Contractor shall mow, water as directed and otherwise maintain seeded areas in a satisfactory condition until final inspection and acceptance of the work.

6. All sod that dries or is washed out shall be replaced and all seeded areas that do not produce a uniform, healthy stand of grass shall be re-seeded.

SECTION 02D040
MOBILIZATION AND SITE PREPARATION

PART 1. GENERAL

1.01 SUMMARY

1.01.1 SECTION INCLUDES

This section includes all site preparation work as shown in the Construction Drawings and as specified herein. In general, but not necessarily limited to clearing and grubbing demolition and removal of existing structures and obstructions: protection of trees, plants, etc.: stripping and storing of topsoil, and erosion control and de-watering. Constructions of access roads, erection of resident engineer's field office, and project sign.

PART 2. GENERAL

A. All products shall be as specified, indicated in the Construction Drawings and/or as required by Engineer to complete the specified work.

PART 3. EXECUTION

A. Contractor shall do all site preparation work as shown in the Construction Drawings and as specified herein, including but not necessarily limited to the following: clearing and grubbing; demolition and removal of existing structures and obstructions; protection of trees, plants, etc.; stripping and storing of topsoil; erosion control and de-watering; constructions of access roads; erection of resident engineer's field office; and project sign.

B. Clearing and grubbing shall be performed as specified in section titled "Site Clearing and Grubbing".

C. Existing foundations slabs, pavements, fences, abandoned utilities, and other obstructions encountered shall be demolished, removed and disposed of off the site in accordance with applicable regulations.

D. The contractor shall provide access roads to move his material and equipment to, and from the job-site.

E. Contractor shall provide a field office in the staging area shown on the plans for the use of the resident engineer and a project sign as specified elsewhere in the specifications.

SECTION 02D115
CUTTING AND REMOVING EXISTING CONCRETE, MASONRY AND MISCELLANEOUS WORK

PART 1. GENERAL

1.01 SUMMARY

1.01.1 SECTION INCLUDES

A. Under this Section Contractor shall furnish all materials, labor, tools, plant and equipment for the cutting and removing of the existing concrete, masonry and miscellaneous work shown in the Construction Drawings, ordered by the Engineer or required by the work to be done.

PART 2. PRODUCTS

A. All products shall be as specified, indicated in the Construction Drawings and/or as required by Engineer to complete the specified work.

PART 3. EXECUTION

A. Contractor shall furnish all materials, labor, tools, plant and equipment for the cutting and removing of the existing concrete, masonry, and tiles and shall perform all other miscellaneous work required for the pipe crossing, connections to and for alterations to existing structures, where not otherwise expressly provided for, as shown in the Construction Drawings, ordered by the Engineer or required by the work to be done.

B. The Contractor shall clearly mark all concrete and masonry to be cut. Contractor shall receive approval from Engineer for each cut before Contractor starts each particular cut.

C. Interface with Structural Elements. All work to be performed under this item shall be performed with no interference with important structural elements. Damage to existing structural elements to remain will not be permitted. If Contractor causes damage to existing structural elements to remain he shall repair or rebuild such portions thereof as the Engineer may direct at his own cost and expense.

D. Interface with Other Work. If Contractor needs to interfere with normal plant operation to perform cutting of concrete and masonry he shall coordinate the work with Engineer so that such interference is minimal.

E. Method of Cutting. Existing concrete and masonry may be cut using concrete saws, by drilling and broaching or reaming, or by any other method equal thereto which is approved by and acceptable to the Engineer. Blasting or any other method which may damage existing structures or the surrounding masonry to remain will not be permitted for purposes of cutting masonry. The methods used and the manner of performance of the work shall be such that no damage or cracking shall occur in the surrounding masonry to remain. If damage to existing masonry to remain results from the operations of the Contractor he shall repair or rebuild such portions thereof as the Engineer may direct at his own cost and expense.

F. Dimensions of Openings. Openings for crossing of pipes shall be cut to the lines called for in the Construction Drawings or directed by the Engineer. . Openings to receive wall sleeves, castings or similar accessories shall be cut to a dimension providing four (4") inches clearance around the greatest outside dimensions of the castings or other accessories to be installed in the openings. Openings for purposes other than the installation of castings and similar accessories shall be cut to the lines called for in the Construction Drawings or directed by the Engineer. Should an overbreakage greater than four (4") inches occur in reinforced concrete masonry it shall be repaired by welding approved steel reinforcement mesh to the reinforcing bars where directed by the Engineer and filling the space with concrete masonry.

G. Refilling Openings. Where pipes sleeves, castings and/or similar accessories are to be installed in the openings they shall be firmly packed in place using concrete conforming with the applicable requirements specified in Sections 033100 "Cast in Place Concrete" and masonry conforming to applicable requirements specified in Section 042212 "Concrete Blocks".

H. Steel Reinforcement Bars. Existing steel reinforcement, exposed in cutting the openings in existing concrete and masonry, and remaining in the finished work shall be thoroughly cleaned, straightened or bent as required and prepared for jointing with new reinforcement and for casting in the new concrete masonry as required.

I. Cleaning Up. All masonry and tiles shall be removed as they are cut insofar as is possible. No large quantity of broken masonry or tiles shall be allowed to accumulate within any structure or conduit and, when the work of cutting is completed, the site shall be immediately and thoroughly cleaned and cleared of all debris, sand and dust.

SECTION 02D130
DISPOSAL OF UNSUITABLE MATERIAL

PART 1. GENERAL

1.01 SUMMARY

1.01.1 SECTION INCLUDES

This section consists of the disposal of unsuitable excavated material.

PART 2. PRODUCTS

All products shall be as specified, indicated in the Construction Drawings and/or as required by Engineer to complete the specified work.

PART 3. EXECUTION

A. Contractor shall dispose unsuitable material excavated. Disposal shall be effected by the Contractor at a spoil disposal area shown on the Construction Drawings.

1. The spoil disposal area will be available for operations during normal working hours and day only. The use of the spoil disposal area shall be coordinated by the Contractor through the Engineer. The location of the disposal area is specified in the Construction Drawings. The Contractor shall transport, dump and spread at his cost, any and all spoils of organic origin and otherwise unsuitable matieral to be disposed from the project to the spoils disposal area. The Contractor shall report to the Engineer any erosion gullies, settlement of the embankment or any other damage that these structures could have suffered because of natural causes or due to the effect of the operation of equipment. The Contractor is hereby advised that other Contractor's may be using this area at the time and that coordination between them shall be required for a smooth operation, such coordination to be executed through the Engineer.

B. If the Construction Drawings do not indicate a spoil area for disposable of unsuitable material, the Contractor shall identify a suitable disposal area, obtain all government permits, transport, dump and spread the unsuitable material at his own expense.

C. Contractor shall avoid erosion at the job site and at the disposal area.

D. Contractor shall pay all fees related to requesting permission, certifications and others related to this disposal area.

E. Contractor shall follow all laws and regulations including but not limted to gulations of the Environmental Quality Board, Department of Natural and Environmental Resources and from the *Centro de Excavaciones de la Comisión de Servicio Público.*

SECTION 02D150
CROSSING OF EXISTING STORM SEWER

PART 1. GENERAL

1.01 SUMMARY

1.01.1 SECTION INCLUDES

This section includes all necessary materials and labor to make the crossing of the existing storm sewer including excavation as shown in the Construction Drawings or ordered by the Engineer.

PART 2. PRODUCTS

A. All products shall be as specified, indicated in the Construction Drawings and/or as required by Engineer to complete the specified work.

PART 3. EXECUTION

A. The Contractor shall furnish all necessary materials and labor, including excavation, backfilling and all tools and appurtenances necessary, to make the crossing of the existing storm sewer as shown in the Construction Drawings or ordered by the Engineer.

B. Crossing the existing storm sewer shall be made at the proper grade elevation, with utmost care so as to avoid leaks and other imperfections, and to the satisfaction of the Engineer.

SECTION 02D160
CROSSING RIVER BEDS

PART 1. GENERAL

1.01 SUMMARY

1.01.1 SECTION INCLUDES

This section includes all excavations and materials needed to complete the crossing below riverbeds necessary for the installation of the pipeline shown in the Construction Drawings.

1.02 PROJECT CONDITIONS

1.02.1 ENVIRONMENTAL REQUIREMENTS

A. Pipelines will be laid during the dry season, when the river flows are at their minimum.

PART 2. PRODUCTS

A. All products shall be as specified, indicated in the Construction Drawings and/or as required by Engineer to complete the specified work.

PART 3. EXECUTION

A. The Contractor shall execute all excavations, temporary river diversion, backfilling, tamping, sheeting, dewatering mortar bedding, pouring concrete jacket and everything necessary to complete the work in readiness for operation.

B. The Contractor shall furnish all material for the complete crossing below riverbeds needed for the installation of the pipeline shown in the Construction Drawings.

C. The pipeline will be installed using the "open trench" method. The proposed construction sequence shall be as follows:

1. Temporarily divert river flow by constructing by-pass open channel.

2. Open pipe trench.

3. Set pipe on mortar bed and pour concrete jacket.

4. Backfill trench and revert river to original position. Fill in by-pass channel.

D. The pipe foundation shall be constructed with ample safety to prevent any potential "washing out" effect.

E. Cautionary signs indicating "under water crossings" shall be posted on both sides of the river and shall comply with Department of Natural Resources and U. S. Corps of Engineers Regulations.

SECTION 02D180
FIRE HYDRANTS

PART 1. GENERAL

1.01 SUMMARY

1.01.1 SECTION INCLUDES

This section consists of furnishing and installing all fire hydrants shown on the plans or that may be ordered.

PART 2. PRODUCTS

A. Quality. Fire hydrants shall conform to the requirements of the latest specifications of the American Water Works Association.

B. Size. Hydrants shall be provided with a 6 in. diameter hub connection when the diameter of the main line to be connected is 6 in. or of larger diameter, and 4 in. connection when the main is 4 in. diameter.

C. Design. Hydrants shall be of the "Puerto Rico Fire Hydrant" standard type adopted by the Puerto Rico Aqueduct and Sewer Authority, or approved equal, and shall conform to the corresponding approved drawings. They shall open to the left. The direction of opening shall be cast on head of hydrant and shall be as shown in the Construction Drawings.

Hydrants shall be cast-iron body, fully bronze mounted, suitable for a working pressure of 150 lbs. per sq. in. All castings shall be clean and sound without defects, which will impair their service. No plugging, welding, or repairing of such defects will be allowed.

Hydrants shall be constructed in a manner permitting withdrawal of internal working parts without disturbing barrel or casing. Valve, when shut, shall be reasonably tight when upper portion of barrel is broken off.

Each hydrant shall be tested at the factory to a hydrostatic pressure of 300 1b. per sq. inch with valve in both open and closed positions.

Hose nipples shall be bronze or non-corrosive metals, and threads shall be National Standard. Nipple caps shall be securely chained to the barrel.

D. Paint. Hydrants shall be paint one coat of Du Pont Dulux 773 Zinc Chromate Primer, or approved equal, and two finishing coats of an approved paint of color directed by the Engineer. The final coat shall be Sonneborn's Hydrant Enamel or approved equal.

E. Wrenches. One set of operating wrenches shall be furnished for every ten (10) hydrants. Each set shall consist of one hydrant operating wrench, one valve key and one dissembling wrench.

PART 3. EXECUTION

3.01 CONSTRUCTION

A. The Contractor shall furnish and install all fire hydrants shown on the plans or that may be ordered.

3.02 FIELD QUALITY CONTROL

A. After installation, hydrants shall be tested under the full head, and any leaks or other defects shall be repaired and made good by the Contractor at his expense.

SECTION 02D205
CONCRETE MANHOLES

PART 1. GENERAL

1.01 SUMMARY

1.01.1 SECTION INCLUDES

This section consist of the excavation and furnishings of all materials, labor, equipment and others to built and complete the construction and reconstruction of all manholes: job built manholes, precast reinforced concrete manholes and drop manholes shown in the Construction Drawings.

PART 2. PRODUCTS AND EXECTUION

A. The Contractor shall do the excavation and furnishing of all materials to built and complete the construction and reconstruction of all manholes: job built manholes, precast reinforced concrete manholes and drop manholes shown in the Construction Drawings. This works shall include all labor, tools and equipment in backfilling, sheeting and bracing, dewatering, protection of the public and of existing structures, hauling and disposal of surplus material, concrete masonry, precast manhole, frame and covers, ladder rungs, installation of pipe stubs and plugs, removal and replacement of paving and everything necessary for the completion of the work as shown on Construction Drawings or that may be ordered by the Engineer. The depths of the manhole will be measured from the top (at ground surface) and at the centerline of the manhole to the invert of the manhole plus the depth of slab.

B. Contractor shall furnish and install manhole ladder and safety cage as required by Section 055155 titled "Ladder & Safety Cage"

C. All precast reinforced concrete manholes shall be built in strict accordance with specification ASTM designation C478 latest revision.

D. The work shall be scheduled in sequence avoiding the installation of registers without the connecting pipes.

E. Excavation. The excavation for the job built and precast reinforced manholes shall be of ample dimensions to permit easy construction and to facilitate the installation and safety. Backfilling shall be carefully executed so as not to injure the masonry. Where the sub-grade is mucky at a job built manhole, three inches of additional excavation shall be made and a three inches layer of stone placed on the sub-grade, without any additional compensation. Where the sub-grade is mucky at a precast reinforced manhole, six inches of additional excavation shall be made and six inches layer of stone placed on the sub-grade, without any additional compensation.

F. Drops. The Y Branch and curve for drops manhole shall be installed following details as shown in the Construction Drawings; including but not limited to interior drops manhole. In case of interior drop manholes, the installation of PVC-Tee and caps or cast-iron fittings should follow the construction details.

G. Care of Work. Care shall be taken to built or to install precast reinforced concrete manholes water tight. The channels on the bottom shall be of true size and built on the same grade as the adjoining sewer. When the grade changes at a manhole, it shall occur at either end as directed by the Engineer. Up to their completion, manholes shall be left clean and free from lumber, mortar and rubbish and ready for operation.

H. Joints.

1. Between Manhole Risers. A butyl rubber or mastic sealant joint shall be installed not less than 1" wide. No special finish shall be applied at the interior of the manhole. Excess of the butyl rubber or mastic sealant shall be carefully cut.

2. Between Manhole and Pipe. The contractor is responsible for making a water tight joint between the manhole and the pipe. If existing manholes provide for this water tightness by means of integrated rubber gasket joint for hook-up of the pipe, the contractor must care about the integrity of this rubber seal.

I. Protective Lining. All "Drop manholes" shall have an epoxy protective lining applied to the interior surfaces of a minimum of 40 mils when measured wet and when measured dry. For standards manholes, the epoxy lining shall be for a minimum of 30 mils when measured wet and when measured dry. The material for the epoxy lining at a precast reinforced concrete manhole shall be equal or similar to Ceilgard 663 as manufactured by Master Builders Inc.. The material to be used at a job built manhole and manhole reconstruction shall be Concressive 1305, as manufactured by Adhesive Engineering Company. In both cases the material of the protective lining shall meet the requirements for the Corps of Engineers Specifications C-200 and Mil - P 23236.

The epoxy coating shall be applied in all instances after the manhole has been cured but not less than 7 days after pouring of concrete for manhole section.

For manholes requiring plastic lining, it shall be LOK Rib Koroseal lining, T-lock Amerplate, or equal.

J. Miscellaneous Metal Work. The Contractor shall furnish and install cast iron manhole frames and covers, galvanized wrought iron steps, and other miscellaneous metal work and castings as shown in the Construction Drawings. They shall conform to the designs shown, in weight, thickness of metal and cover design and no modification of design or substitution will be permitted unless approved in writing by the Engineer.

K. Manhole Frame and Cover. Manhole frame and cover shall be installed as shown in the Construction Drawings. The construction of the manhole caver cover slab for pre-cast or cast-in-place manholes should consider the complete embedment of the cast-iron frame and cover access. It should be installed before pouring of concrete for the slab in order to fix-it in place.

After installation, Contractor shall clean all manhole frames and covers to bare metal of mortar, rust, grease, dirt, and other deleterious materials and apply a coat of bituminous paint according to the manufacturer’s standard practice. Do not paint surfaces subject to abrasion.

L. Job Built Manholes

1. Concrete shall be either Class A or Class B. All reinforced concrete shall be Class A. All other concrete shall be Class B except where otherwise shown in the Construction Drawings or directed by the Engineer. Reference is made to the specifications covering materials and workmanship contained under Section 033100 "Cast in Place Concrete". Class A concrete is a design mix to produce a resistance of 3,000 PSI.

2. Site Mixing:

a) All design mix shall be aproved by engineer.

b) Mix concrete with an approved rotating type batch machine, except where hand mixing of very small quantities may be permitted.

c) All concrete shall be of homogeneous structure for every part of work, having the required strength, watertightness, and durability. Give careful attention to selection of materials, mixtures, placing, spading, vibrating, and curing.

d) Maintain equipment in proper operating condition, with drums cleaned before charging each batch. Schedule rates of delivery in order to prevent delay of placing the concrete after mixing, or holding drymixed materials too long in the mixer before the addition of water and admixtures.

3. All voids in concrete shall be filled with mortar and carefully troveled and all fins and other projections removed as soon as forms have been removed and while the concrete is green. Inverts and waterways of manholes shall be true to line and grade and brought to a smooth finish.

4. Attention is called to the fact that extra steel reinforcement is required at all openings in walls or slabs.

M. Reconstruction of existing manhole. Reconstruction of existing manhole shall be made at the proper grade elevations, with utmost care so as to avoid leaks and other imperfections, and to the satisfaction of the Engineer. Cement mortar used in this work shall composed of:

1. Cement for mortar shall be American Portland cement of a recognized brand satisfactory to the Engineer and shall meet the requirements of the "Standard Specification for Portland Cement" of the ASTM, Serial Designation C150, Type I-A.

At the option of the Engineer and at the expense of the Contractor, bid tested from reserved bins at the plant of the cement manufacturer will be acceptable, provided the standard tests including those made upon twenty-eight (28) day old cement mortar are conducted by an approved testing laboratory, and provided complete reports of the tests are satisfactory to and received by the Engineer before the cement is to be used.

2. Sand for mortar shall be of such fineness that 100% will pass a standard 8 mesh sieve, and at least 45 percent will pass a standard 40 mesh sieve.

Sand used in backfill shall be clean, natural and consisting of hard, dense, strong, durable and uncoated particles. It shall be free from injurious amounts of dust, lumps, soft or flaky material,

shale, mica, loam, organic matter and other deleterious substance. Sand failing in the standard colorimetric test shall not be used. Sand shall have a specific gravity not less than two and six-tenths (2.6) and any sand which fails to show tensile and compressive strength in one to three (1 :3) mortar specimens equal to that of standard Ottawa sand mortar shall be rejected. Loss on sodium sulfate test shall not exceed five (5) percent.

All metal work shall be thoroughly cleaned and given two (2) full coats of black asphaltum varnish of the best quality obtainable.

2.02 FIELD QUALITY CONTROL

2.02.1 MANHOLES TEST

A. Exfiltration Test

1. Plug the inlet and outlet.

2. Fill manhole with clean water up to one foot below the bottom surface of the frame and cover.

3. Let the water to stand in the manhole for one (1) hour. This allows the concrete material to reach its maximum absorption and to leaks, etc.

4. After one (1) hour, refill water level to the original depth. After 30 minutes, record the difference in elevation of the water surface. After determine how many gallons of water per inch of depth at manhole; make the conversion of your recorded data to gallons per minutes of leakage at said manhole.

B. Infiltration Test

1. The test for infiltration at manholes shall be done by direct observation, i.e., and a visual test.

2. The quantity of infiltrated water shall be determined making direct measurements of volume and time.

C. Limits for Infiltration and Exfiltration. There will be no allowance (zero gallons) for each test; as applicable.

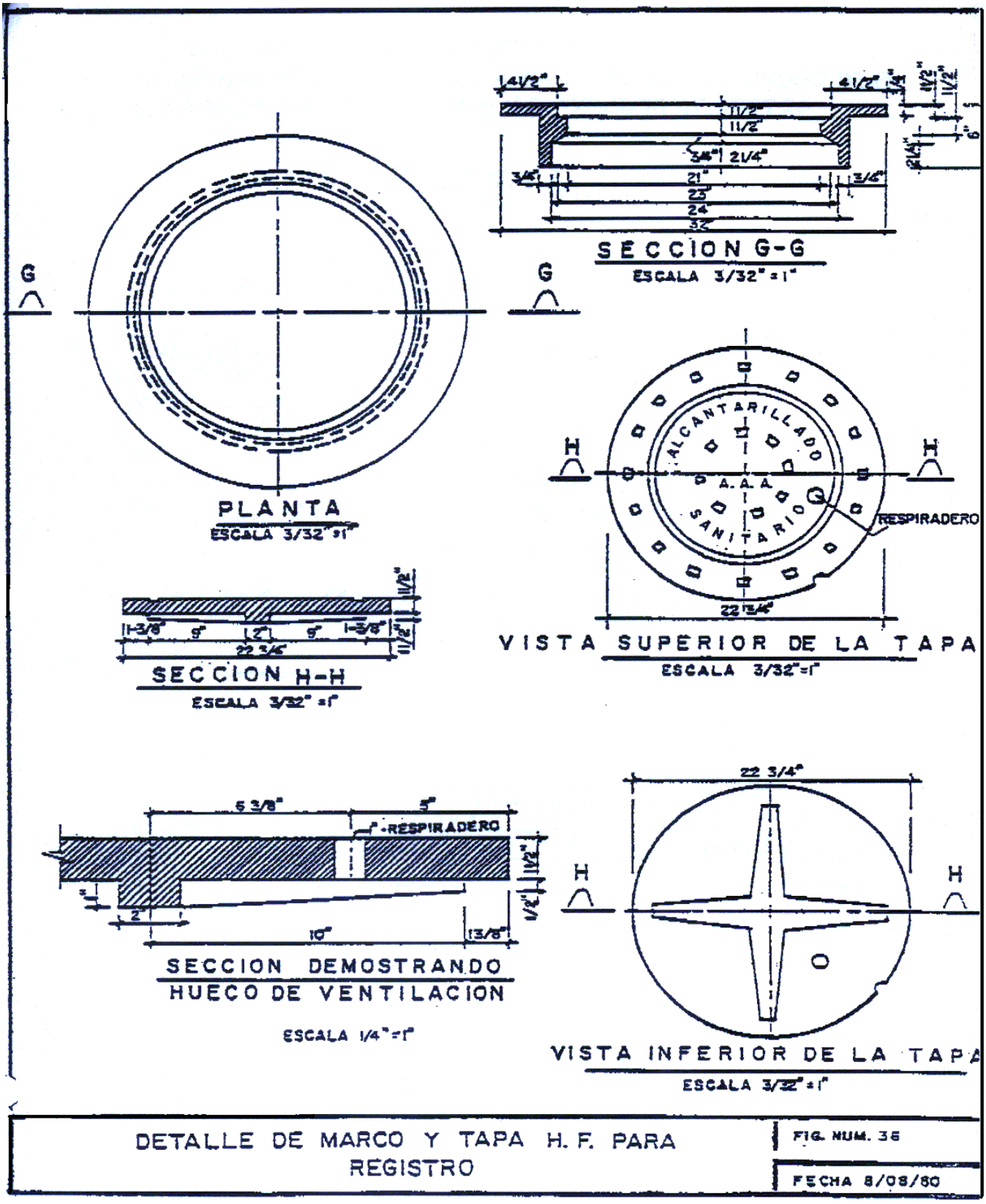
PLANTA
ESCALA 3/32"=1"
SECCION G-G
ESCALA 3/32"=1"
VISTA SUPERIOR DE LA TAPA
ESCALA 3/32"=1"
ALCANTARILLADO
A.A.A.
SANITARIO
RESPIRADERO
SECCION H-H
ESCALA 3/32"=1"
SECCION DEMOSTRANDO
HUECO DE VENTILACION
ESCALA 1/4"=1"
VISTA INFERIOR DE LA TAPA
ESCALA 3/32"=1"
DETALLE DE MARCO Y TAPA H. F. PARA REGISTRO
FIG. NUM. 36
FECHA 8/08/80

Figure 1

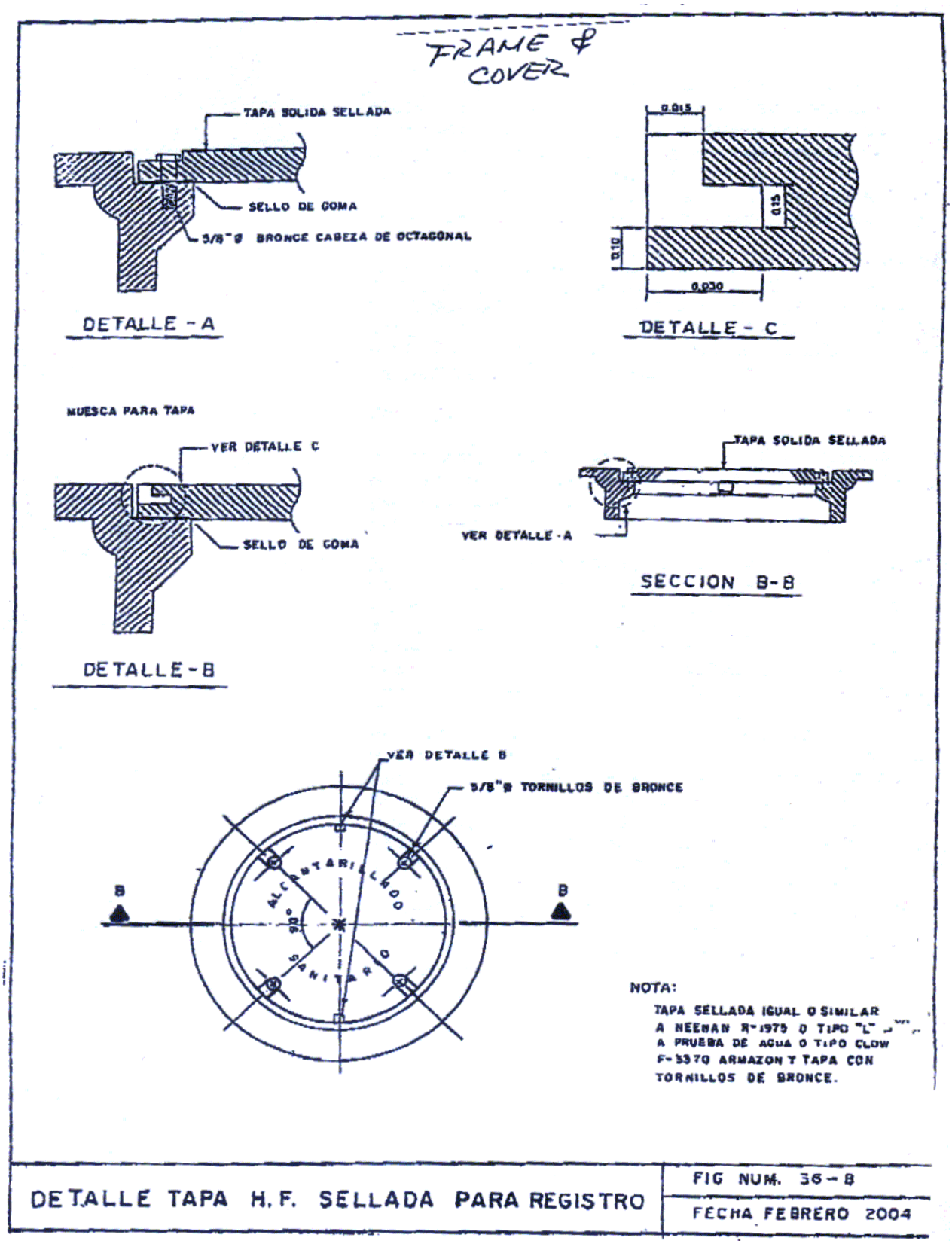
FRAME & COVER
TAPA SOLIDA SELLADA
SELLO DE GOMA
5/8"Ø BRONCE CABEZA DE OCTAGONAL
DETALLE - A
0.015
0.15
0.10
0.030
DETALLE - C
MUESCA PARA TAPA
VER DETALLE C
SELLO DE GOMA
DETALLE - B
TAPA SOLIDA SELLADA
VER DETALLE - A
SECCION B-B
VER DETALLE B
5/8"Ø TORNILLOS DE BRONCE
B
B
ALCANTARILLADO
SANITARIO
NOTA:
TAPA SELLADA IGUAL O SIMILAR A NEENAH R-1975 O TIPO "L" A PRUEBA DE AGUA O TIPO CLOW F-3370 ARMAZON Y TAPA CON TORNILLOS DE BRONCE.
DETALLE TAPA H.F. SELLADA PARA REGISTRO
FIG NUM. 36-B
FECHA FEBRERO 2004

Figure 2

SECTION 02D215
INTERNAL INSPECTION AND SEALING OF EXISTING SANITARY SEWERS

PART 1. GENERAL

1.01.1 SECTION INCLUDES

This section covers the work required to inspect, test and seal existing sanitary sewer pipes. The work includes, but is not limited to, furnishing all labor, materials and equipment required to (1) clean, (2) provide internal television inspection and a log of inspection results, (3) pressure test all joints, (4) seal by grouting internal gravity cracks or defective joints, and (5) retest joints or cracks after sealing, for designated sections of existing sanitary sewer pipes as shown on the Construction Drawings.

PART 2. PRODUCTS

2.01 CLEANING EQUIPMENT

A. Cleaning equipment shall utilize high pressure water pumped through a hose and nozzle propelled through the sewer by water discharge from the nozzle.

B. The equipment shall have a minimum of 400 feet of high pressure hose with a selection of two or more high velocity nozzles. The nozzles shall have a minimum capacity of 30 gpm at a minimum working pressure of 850 pounds per square inch and shall be capable of producing a scouring action in all size pipes designated to be cleaned. Equipment shall also include a high velocity gun for washing and scouring manhole walls and floor. The gun shall be capable of producing flows from a fine spray to a long distance solid stream. The gun capacity shall be at least 10 gallons per minute at 200 pounds per square inch.

2.02 TELEVISION EQUIPMENT

A. Television equipment shall consist of a self-contained camera and a monitoring unit connected by coaxial cable. The camera shall be small enough to ensure passage through a 6-inch diameter sewer, shall be waterproof, and shall have a self-continuous 650-line resolution picture showing the entire inside periphery of the pipe.

B. Provide equipment, materials and media (memory cards, etc.) required to take photographs of the monitor image with a digital camera or approved equal.

2.03 PRESSURE TEST EQUIPMENT

A. Pressure test equipment shall include facilities to isolate each individual joint or circumferential crack in the sewer line being inspected from the remainder of the pipe so that air pressure can be applied to the joint internally to determine joint quality. Facilities shall include air supply, hoses and pressure gauge to permit reading the pressure applied to the joint and determination of pressure loss through cracks or defective joints. Equipment shall be capable of a test pressure of not less than 5 pounds per square inch. The equipment shall be capable of operating in all pipe sizes to be tested.

2.04 SEALING EQUIPMENT

A. The sealing equipment shall be provided with pumping systems, instant reading controlled flowmeters, hose systems and a sealing device. The pumping systems shall be capable of supplying an uninterrupted flow of sealing material to completely fill the point of infiltration and provide a seal which will withstand joint testing, as set forth hereinafter.

B. The equipment shall provide proportioning and mixing of the sealing material in accordance with the manufacturer's recommendations. The equipment shall be capable of proper operation in all pipe sizes to be tested. Sealing shall be accomplished from inside the sewer pipe. The sealing device shall be positioned using the TV camera rather than from location on the log of the inspection.

C. The equipment shall be a gasket packer rejointer or other suitable device which can be positioned to completely isolate each defective sewer joint. The device shall be an open-ended cylindrical casing smaller in size than the pipe that is being repaired, with cables connected to either end to pull it through the line.

D. Near each end of the casing shall be a pneumatically expanded sleeve. The sleeves shall seat against the inside periphery of the pipe in such a way as to form a void area, completely isolated from the remainder of the line. Sleeve expansion shall be regulated by precise pressure gauges and controls. No device which is expanded hydraulically or mechanically and which could cause damage to the pipe will be allowed.

E. A conduit shall pass through the open end of the casing and shall be adapted to supply the sealing material under pressure, to the space between the casing, the sleeves and the sewer pipe through hose lines leading from aboveground. The chemical sealants shall be pumped by continuous air pressure tanks and controlled through flowmeters, so that materials being injected can be instantly regulated in accordance with the type of leak being sealed. The equipment shall permit control of pressure, proportions and quantities of injection as determined by the size and location of the leak, percentages of voids being filled, type of soil encountered, and rate of flow of the solution in relation to the back pressures.

2.05 SEALING MATERIAL

A. Sealing materials shall be a chemical sealant solution containing the principal chemical sealant constituent and a two-part catalyst recommended by the manufacturer. The principal chemical sealant constituent and the catalyst system shall be of the same manufacture, specifically recommended for the purpose of sealing leaks in sanitary sewer lines and stabilization of earth masses. The chemical sealant used shall have a documented record of satisfactory performance in similar usage. The chemical sealant, in its gel form, after final reaction, shall be a translucent stiff gel (shall not be rigid or brittle) that is impermeable. The chemical solution shall have the ability to tolerate dilution and react in moving water.

PART 3. EXECUTION

3.01 GENERAL

A. The following general procedure shall be followed to clean, inspect, test, and seal pipes designated for testing. The work shall be accomplished completely in one manhole section at a time. A manhole section is defined as the length of pipe connecting two manholes.

1. Clean a manhole section.

2. Inspect the manhole section internally with TV, and make a log of conditions encountered.

3. Test every joint in the manhole section.

4. Seal all joints which fail to pass the leakage test and cracks in the manhole section.

5. Retest each crack and originally defective joint after sealing to demonstrate that the sealing has been successful.

3.02 CLEANING

A. Clean the manhole section using the cleaning equipment specified. All sludge, dirt, sand, rocks, grease, and other solid or semisolid material resulting from the cleaning operation and which could cause line stoppages shall be removed at the downstream manhole. All solids or semisolids resulting from the cleaning operation shall be removed from the site and disposed of at sites designated by PRASA. Under no circumstances shall sewage or solids removed from the downstream manhole be dumped onto the streets or into ditches, catch basins, or storm drains.

B. The Contractor shall be responsible and repair, at no cost to PRASA, any damage to structurally sound lines caused by use of the sewer cleaning equipment. Further, the Contractor shall be responsible for any damage to properties connected to the sewer, which result from the sewer cleaning operation.

C. Cleaning shall be accomplished so that TV inspection and sealing can be properly accomplished, as determined by the Engineer, or the line shall be recleaned at no additional cost to the PRASA.

3.03 TELEVISION INSPECTION

A. Television equipment specified shall be used to perform television inspection on one manhole section at a time. Each manhole section being inspected shall be isolated from the remainder of the line by the use of a line plug to ensure total viewing of the inside periphery of the line. The inspection shall be performed by pulling the television camera through the line along the axis of the pipe. The inspection shall be performed in a forward and/or backward direction, according to the line condition at the time the inspection is made.

B. Contractor shall deliver to Engineer two copies of a log of each manhole section inspected. The log shall include, but not be limited to:

1. Location of each point of leakage.

2. Location of each service connection.

3. Location of any damaged sections, and nature of damage.

4. Deflection in alignment or grade of pipe.

5. Record of repairs and quantity of sealing material used.

6. Date, city, manhole section, reference manhole number, name of operator, and inspector.

7. Location of any digital picture required by PRASA; location shown in the log shall give the distance from the center of the reference manhole to the feature described and the location of the feature with respect to the axis of the pipe.

C. The location with respect to the reference manhole shall be determined with a meter device, accurate to 0.2 foot. The device shall be observable at the ground level. Markings on the cable, instruments requiring observation inside a manhole, or correction of each reading for the depth of the reference manhole will not be allowed.

D. Obtain such digital pictures of the monitor image as requested by PRASA.

1. Contractor shall deliver to Engineer digital pictures in digital media and high resolution printout on long lasting paper.

3.04 TESTING

A. Each joint shall be pressure tested by applying a pressure of *5* pounds per square inch to the joint with the pressure test equipment. Any joint for which there is appreciable pressure loss over a period of 30 seconds shall be considered defective.

B. After sealing a crack or defective joint, the joint or crack shall be retested as outlined above. The joint shall be rescaled if the pressure loss is greater than 1/2 pound per square inch in the 30-second test period.

3.05 SEALING

A. Sealing shall be accomplished so that it does not damage, break, move, or cause line settlement of any pipes which are structurally sound. Sealing shall be accomplished so that the original cross-sectional area and shape of the interior of the sewer pipe is not permanently reduced or changed. Sealing materials that set to a hard, rigid product which might intrude into the sewer line will not be acceptable.

B. Sealing shall be accomplished with the plastic injection method as performed by Penetryn System, Inc.; or the telegrout method as performed by Gelco Grouting Service or approved equal.

C. Mixing and handling of the chemical sealant, and the constituents forming it, which may be toxic under certain conditions of contact and inhalation, shall be in accordance with the recommendations

of the manufacturer. The Contractor shall take whatever precautions necessary to prevent anyone from coming in contact with the chemicals.

D. All cracks and all defective joints shall be sealed unless specifically ordered otherwise by the Engineer.

SECTION 02D250
STEEL FRAME AND COVER

PART 1. GENERAL

1.01 SUMMARY

1.01.1 SECTION INCLUDES

This section consists of furnishing and setting in place all the steel frames and covers, including all material, paint, labor, tools and appliances shown in the Construction Drawings or that may be ordered by the Engineer.

PART 2. PRODUCTS

2.01 MATERIALS

A. Frames and covers shall be made of material free from injurious defects and shall have a workmanlike finish conforming to the specifications of the American Society for Testing and Materials, ASTM A 27, "Specifications for Steel Castings, Carbon, for General Application". Grade 70-36 (480-250) shall be furnished unless otherwise specified on the Drawings.

PART 3. EXECUTION

A. Contractor shall furnish and set in place all the steel frames and covers, including all material, paint, labor, tools and appliances shown in the Construction Drawings or that may be ordered by the Engineer. Frames and covers shall be made to the dimension shown in the Construction Drawings.

B. Covers and frames shall be arranged in sections of dimensions and weight suitable to permit one (1) man to lift a section. Covers and grating shall be provided with holes and lifting rings and shall be securely anchored so as not to rock when walked upon. All gratings, covers and frames shall be true to dimension and shall be set flush with the surface where installed in the masonry. Frames and covers shall be painted with coal tar pitch varnish, to which sufficient oil has been added to make a smooth coating, tough and tenacious when cold, not tacky and not brittle.

SECTION 02D252
CAST IRON FRAMES AND COVERS

PART 1. GENERAL

1.01 SUMMARY

1.01.1 SECTION INCLUDES

This section consists of furnishing and setting in place all the cast iron frames and covers, including all material, paint, labor, tools and appliances shown in the Construction Drawings or that may be ordered by the Engineer.

PART 2. PRODUCTS

2.01 MATERIALS

A. Frames and covers shall be made of clean, even grain, tough gray cast iron of good quality conforming to the specifications of the American Society for Testing and Materials, Serial Designation A48 for Class 30 Gray Iron.

B. The construction of the frames and covers shall be heavy duty, resisting 130% the loading specified by HS-30. Note that HS-30 loading is equivalent to HS-20 loading multiplied by 150%.

C. The frames and covers shall be designed to prevent rocking and rattling under traffic.

PART 3. EXECUTION

A. Contractor shall furnish, paint and set in place all the cast iron frames and covers shown in the Construction Drawings and those ordered by Engineer. Frames and covers shall be made to the dimensions shown in the Construction Drawings.

B. Frames and covers shall be painted with coal tar pitch varnish, to which sufficient oil has been added to make a smooth coating, tough and tenacious when cold, not tacky and not brittle.

SECTION 02D295
BARBED WIRE FENCE

PART 1. GENERAL

1.01 SUMMARY

1.01.1 SECTION INCLUDES

This section includes furnishing all necessary materials, labor, tools, and construct a barbed wire fence and mesh wire gate on the property boundaries, as shown in the Construction Drawings or as directed by the Engineer. It also includes removal of the existing barbed wire fence, as shown in the Construction Drawings or as ordered by the Engineer.

PART 2. PRODUCTS

2.01.1 MATERIALS

In the case of removal an existing barbed wire or mesh wire gate all products shall be as specified, indicated in the Construction Drawings and/or as ordered by the Engineer to complete specified work. Otherwise, if a new barbed wire is going to be constructed the following materials are to be used:

A. The fence shall consist of 9 strands of barbed wire, with concrete post 0.15 M. X 0.15 M. Barbed wire shall be zinc-coated (galvanized) steel wire, and of two (2) strands of No. 12-1/2 steel wires, Class 3 coating twisted together, and with four (4) point barbs. Barbs shall be spaced not over five (5) inches apart.

Barbed wired shall conform to the Standard Specifications for Zinc-Coated (Galvanized) Steel Barbed Wire. (ASTM Designation: A121).

B. The gate shall be two (2) leaves, of height and width as shown in the Construction Drawings, of a standard commercial type, complete with all hardware, and braces. Shall be covered with chain link fabric of 2-inches mesh, 9W&W gauge, copper bearing steel wire, galvanized after weaving by the hot dip process.

PART 3. EXECUTION

3.01 NEW BARBED WIRE FENCE

A. The Contractor shall furnish all necessary materials, labor, tools, and construct a barbed wire fence and mesh wire gate on the property boundaries, as shown in the Construction Drawings or as directed by the Engineer.

B. Contractor shall furnish all necessary materials, labor, tools, and construct a barbed wire fence and mesh wire gate on the property boundaries, as shown in the Construction Drawings or as directed by the Engineer.

C. Post, unless otherwise indicated in the Construction Drawings or indicated by Engineer, shall be spaced at 3 meters on centers, and shall be set vertically to a depth of 0.45 M. in concrete footings, as shown in the Construction Drawings or directed by the Engineer. After the posts are properly set, the wire shall be stretched taut and fastened to the post with galvanized wire Gage No. 12- 3 turns on each band. The wires shall be spaced as shown in the Construction Drawings. Corner posts shall be provided with two (2) diagonal post braces, and intermediate and end post with one (1) diagonal post brace.

3.02 REMOVAL OF EXISTING BARBED WIRE

A. The Contractor shall furnish all materials, labor, tools and equipment necessary to remove the existing barbed wire fence, as shown in the Construction Drawings or as ordered by the Engineer.

B. Engineer shall determine the location where the removed material shall be delivered. If the Engineer determines it shall be discarded, the Contractor shall remove it from the premises at Contractor's expense.

SECTION 02D300
CHAIN LINK FENCE

PART 1. GENERAL

1.01 SUMMARY

1.01.1 SECTION INCLUDES

This section includes furnishing all necessary labor, tools, materials and equipment neccesary for the construction of a new chain link fence on the boundaries of the lot, including the gate, complete as shown in the Construction Drawings and as specified herein. It also includes relocation and removal of the existing chain link fence shown in the Construction Drawings or ordered by the Engineer.

PART 2. PRODUCTS

2.01 MATERIALS

In the case of relacation of an existing chain link fence all products shall be as specified, indicated in the Construction Drawings and/or as ordered by the Engineer to complete specified work. Otherwise, if a new chain link fence is going to be constructed the following materials are to be used:

A. Fabric. Shall be No. 9 gauge chain link copper bearing steel covered with PVC, woven in a 2-inch mesh with twist and barbed finish at top and bottom. Height of fabric: 6'-0". Note: The gage No. 9 only considers the steel thickness, not the PVC covering it.

B. Line Posts. Shall be 2" OD standard pipe. Posts shall be spaced not more than 10 ft. on centers and set full 3 ft. in bell shaped concrete footings, crowned at top to shed water.

C. Top Rail. Shall be 1-5/8" OD standard pipe hot galvanized and shall be furnished in ransom lengths averaging not less than 20 ft. joined with extra long pressed steel sleeves, hot galvanized.

D. End and Corner Posts. Shall be standard hot galvanized, basic open hearth, copper bearing steel pipe 3"-O.D., weighting 5.79 lbs. per foot, for setting full 3' deep in bell-shaped concrete footings crowned to shed water.

E. Gate Posts. Shall be standard hot galvanized basic open hearth copper bearing steel pipe 4" OD, weighting 9.1 lbs. per foot setting full 3 ft. deep in bell shaped concrete footings crowned to shed water.

F. Fabric Ties. Shall be aluminum strip or wire of approved gauge, for attaching fabric to line posts and top rail. Used on top rail every 24 inches on line posts every 14 inches.

G. Barbed Wire. Shall be surmounted with 3 strands. Each strand shall consist of two No. 12-1/2 Causes twisted coppers bearing steel line wires hot doubled galvanized, with No. 14 gauge aluminum 4-pt. barbs spaced not more than 4" apart.

H. Barbed Wire Extension. All intermediate and corner posts shall be equipped with extension arms for supporting barbed wire. The base shall be malleable iron and the extension pressed steel, hot galvanized after fabrication. The intermediate arms shall have provision for passing to rail, and corner arm casting, equipped with set screw.

I. Bracing. All terminal posts shall be braced by means of 1-5/8 OD horizontal compression member, securely attached to terminal and first line post with malleable iron fittings and beveled edge bands; truss braced from first line post to bottom of terminal with 1/2" rod and turnbuckle Corner post, to be braced in each direction.

J. Tension Bars. Shall be 3/16" x 3-1/4" steel, attached to terminal posts be means of beveled edge bands.

K. Brace and Tension Bands. Shall be beveled edge type with 3/8" diam. squared shouldered aluminum carriage bolts, non-removable from outside fence.

L. Swing Gate Frames. Shall be 2" OD standard pipe with internal bracing of 1-5/8" OD standard pipe welded at all points to provide rigid watertight construction. Single gate shall be 1-5/8" OD standard pipe internal bracing of 1-5/8" OD standard pipe.

M. Gate Fillers. Frames shall be filled with same specifications of fabric as is used in line of fence.

N. Hinges. Shall be of malleable iron, of sufficient strength to carry more than the weight of the gate. Standard swing 90 degrees.

O. Locking Device for Double Gate. Shall be rop bar type securely bolted to gate frame and to engage a heavy malleable Iron Gate stop anchored in concrete footings. It shall be equipped with padlock arrangement.

P. Single Gate. Shall be a suitable fork arrangement with padlock attachment 9 in malleable iron.

Q. Miscellaneous Fitting. The Contractor shall furnish all fittings necessary to make a complete installation.

PART 3. EXECUTION

The Contractor shall furnishing all necessary labor, tools, materials and equipment neccesary for the construction of a new chain link fence on the boundaries of the lot, including the gate, complete as shown in the Construction Drawings and as specified herein.

The Contractor shall also relocate the existing chain link fence, as shown in the Construction Drawings or as ordered by the Engineer. The work shall be performed under the direct supervision of the Engineer and care shall be taken not to harm the existing material. The chain link fence shall be installed as shown on plans and the work shall be done to the satisfaction of the Engineer.

The Engineer shall determine the location where the removed material shall be delivered. If the Engineer determines it shall be discarded, the Contractor shall remove it from the premises at Contractor's expense.

SECTION 030540
LEAN CONCRETE

PART 1. GENERAL

1.01 SUMMARY

1.01.1 SECTION INCLUDES

This section consists of furnishing all necessary materials and placing all lean concrete shown in the Construction Drawings or ordered by the Engineer, including any necessary forms and all other incidental work which may be required.

PART 2. PRODUCTS

2.01 MIXES

A. The actual proportions and materials used in lean concrete shall be determined by the Engineer.

B. The mix shall conform the applicable requirements specified under Section 033100 –"Cast in Place Concrete".

C. The maximum size of coarse aggregate shall not exceed three quarters (3/4) of an inch.

PART 3. EXECUTION

A. Contractor shall furnish all necessary materials and place all lean concrete shown in the Construction Drawings or ordered by the Engineer, including any necessary forms and all other incidental work which may be required.

B. Lean concrete for trench backfill, where ordered by the Engineer, may be placed as a dry mix. Lean concrete for backfill under structures, where ordered by the Engineer, shall be placed with a slump of approximately ten (10) centimeters, the actual moisture content to be determined by the Engineer.

All lean concrete shall be placed in lifts not to exceed one and three-tenths (1.3) meters in height and shall be thoroughly compacted by approved methods.

SECTION 032100
CONCRETE REINFORCEMENT

PART 1. GENERAL

1.01 SUMMARY

1.01.1 SECTION INCLUDES

Furnish and place all reinforcement and accessories.

1.02 QUALITY ASSURANCE:

A. Fabrication: Materials for which shop drawings are required not to be fabricated before review of the drawings by the Engineer. Tolerances conforming to ACI SP-66.

B. Placement: Place reinforcement to tolerances given in ACI 318.

C. When welding is indicated, specified, or authorized by Engineer, reinforcement, procedures, and welding shall conform to requirements of AWS D1.4 "Structural Welding Code-Reinforcing Steel".

D. When welding performed by qualified operators, certified within the past 12 months and to conform with requirements of AWS D1.4 "Structural Welding Code-Reinforcing Steel".

1.03 REFERENCES

A. ASTM A615-84a, Standard Specification for Deformed and Plain Billet-Steel Bars for Concrete Reinforcement including Supplementary Requirements (S-1).

B. ASTM A185-85, Standard Specification for Welded Steel Wire Fabric for Concrete Reinforcement.

C. ACI SP-66, ACI Detailing Manual, 1980.

D. ACI 318-83, Building Code Requirements for Reinforced Concrete, and Commentary.

E. AWS D1.4-79, American Welding Society, Structural Welding Code, Reinforcing Steel.

1.04 SUBMITTALS:

A. Certificates

1. Submit certified mill test reports for each shipment of reinforcement showing that steel complies with applicable specification. Reports to be identified with specific lots in shipment and submitted prior to use of reinforcement in work.

2. Submit chemical composition of reinforcement steel. Ladle analysis to state percentage of carbon, phosphorous, manganese and sulfur presenting steel.

3. Submit Welder's certification in accordance with AWS D1.4 prior to welding when welding indicated, specified or approved by Engineer.

1.04.2 SHOP AND PLACEMENT DRAWINGS

1. In accordance with Section 013340 – "Shop Drawings, Product Data and Samples", for review by Engineer prior to fabrication.

2. Show construction and expansion joints.

3. Show reinforcement detailed in conformance with ACI SP-66.

4. Show details of bar supports including types, sizes, spacing, sequence and support bars.

5. Show marking for each reinforcement item.

6. Submit bar schedule lists giving weight for each individual bar, total weight of each bar size and total weight of all bars on the list, based on nominal weights shown in ASTM A615.

1.05 DELIVERY, STORAGE AND HANDLING:

A. Reinforcement and accessories shipped to work with items of same size and shape fastened in bundles with securely wired-on metal identification tags giving size and mark.

B. Reinforcement and accessories stored above ground on platforms, skids or other supports and covered.

C. Reinforcement to be protected from rusting, deforming, bending, Kinking and other injury.

PART 2. <u>PRODUCTS</u>

2.01 STEEL REINFORCING BARS

A. Newly rolled deformed billet-steel bars for concrete reinforcement conforming to ASTM A615, Grade 60, unless otherwise indicated.

B. When welding of reinforcement indicated, specified, or approved by Engineer, reinforcement must be weldable steel.

C. Reinforcing bars mill bent, cold. Conform to dimensions indicated and requirements of ACI SP-66.

2.02 TIE WIRE

A. Mild steel or annealed iron.

B. Minimum 16 gage.

2.03 REINFORCING BAR SUPPORTS:

A. Support Bars No. 5 minimum.

B. Bar supports in contact with exposed surfaces plastic protected in conformance with ACI SP-66 (Class-1 Maximum Protection).

C. Precast concrete blocks with wires and/or dowels for bar supports 3-in. by 3-in. and of thickness necessary to produce required concrete cover of reinforcement. Type II cement shall be use for blocks in accordance with section 033100 – "Cast in Place Concrete".

2.04 WELDED WIRE FABRIC:

A. Conform to ASTM A185.

B. Gage and spacing as indicated.

PART 3. EXECUTION

3.01 PLACEMENT

A. Before placing in form, all reinforcement and accessories to be cleaned thoroughly of mortar, oil, dirt, loose mill scale, loose or thick rust, and coatings of any character that would destroy or reduce the bond with the concrete.

B. Reinforcing bars to be accurately placed and securely held in position using tie wire with ends pointed away from forms.

C. Bars may be moved as necessary to avoid interference with other reinforcing steel, conduits, or embedded items. -If bars are moved more than one bar diameter, resulting arrangement of bars is subject to acceptance by Engineer. Place required number of bars.

D. Use chairs, bolsters, spacers and other approved devices of sufficient strength to resist crushing under load in accordance with ACI SP-66, Metal chairs which extend to the surface of the concrete, stones, brick chips etc., and wood block supports not to be used.

E. For foundation mats, base slabs, and slabs on grade use precast concrete bar support blocks.

F. Placing bars on layers of fresh concrete as the work progresses, and adjusting bars during the placement of concrete shall not be permitted.

G. Place bar laps in contact and tie securely, or space transversely apart to permit embedment of entire surface of each bar in concrete. Length of laps for bars to conform with requirements of ACI 318, except as otherwise indicated.

H. Do not splice reinforcement steel in mats, slabs, beams, girders and walls at points of maximum stress unless otherwise indicated.

I. Wire-mesh reinforcement to be lap spliced at least two full meshes; stagger to avoid continuous laps in either direction and wire securely.

J. Reinforcement continuous through construction joints except as otherwise indicated.

K. Reinforcement or other fixed metal items not continuous through expansion joints. Reinforcement clearance of two inches from each face of expansion joint.

L. Do not field bend bars including bars partially embedded in concrete unless indicated or authorized by Engineer. Do not straighten or bend in manner injurious to steel or concrete.

M. Do not place bars that have kinks and bends other than shown on approved shop drawings. Reject and remove such damaged bars and replace at no additional compensation.

N. Use of heat to bend or straighten reinforcing steel not pemitted.

O. Welding of reinforcing bars permitted only where indicated or as otherwise directed by Engineer. Such welding in accordance with AWS D1.4.

P. Welding reinforcing steel only by operators certified in accordance with AWS D1.4.

Q. Tack welding to, or of, reinforcement prohibited.

R. Paint reinforcement which is to be exposed for more than 90 days with coat of neat cement grout to prevent rust formation.

SECTION 033100
CAST-IN-PLACE CONCRETE

PART 1. GENERAL

1.01 SUMMARY

1.01.1 SECTION INCLUDES

This section consists of placing, finishing, protecting and curing cast-in-place concrete as indicated and specified. Contractor shall provide all labor, materials, equipment and incidentals as shown, specified and required to furnish and install the concrete. The concrete shall be composed of portland cement, fine and coarse aggregate, water, and approved admixtures.

1.01.2 RELATED SECTIONS

A. Section 032100 - Concrete Reinforcement

1.02 REFERENCES

1.02.1 THE LATEST EDITIONS WILL BE USED IN ALL REFERENCES.

A. ACI 301: Specifications for Structural Concrete for Buildings

B. ACI 304.3R: High Density Concrete: Measuring, Mixing, Transporting, and Placing

C. ACI 305R: Hot Weather Concreting

D. ACI 306.1: Standard Specification for Cold Weather

E. ACI 308: Standard Practice for Curing Concrete

F. ACI 309R: Guide for Consolidation of Concrete

G. ACI 318 / 318R: Building Code Requirements for Structural Concrete & Commentary

H. ACI SP-4: Formwork for Concrete

I. ASTM A123/A123M: Standard Specification for Zinc (Hot-Dip Galvanized) Coatings on Iron and Steel Products

J. ASTM A153/A153M: Standard Specification for Zinc Coating (Hot-Dip) on Iron and Steel Hardware

K. ASTM C31/C31M: Standard Practice for Making and Curing Concrete Test Specimens in the Field

L. ASTM C33: Standard Specification for Concrete Aggregates

M. ASTM C39/C39M: Standard Test Method for Compressive Strength of Cylindrical Concrete Specimens

N. ASTM C40: Standard Test Method for Organic Impurities in Fine Aggregates for Concrete

O. ASTM C42/C42M: Standard Test Method for Obtaining and Testing Drilled Cores and Sawed Beams of Concrete

P. ASTM C67: Standard Test Methods for Sampling and Testing Brick and Structural Clay Tile

Q. ASTM C94/C94M: Standard Specification for Ready-Mixed Concrete

R. ASTM C138: Standard Test Method for Unit Weight, Yield, and Air Content (Gravimetric) of Concrete

S. ASTM C143/C143M: Standard Test Method for Slump of Hydraulic Cement Concrete

T. ASTM C150: Standard Specification for Portland Cement

U. ASTM C157/C157M: Standard Test Method for Length Change of Hardened Hydraulic-Cement, Mortar, and Concrete

V. ASTM C171: Standard Specification for Sheet Materials for Curing Concrete

W. ASTM C172: Standard Practice for Sampling Freshly Mixed Concrete

X. ASTM C192/C192M: Standard Practice for Making and Curing Concrete Test Specimens in the Laboratory

Y. ASTM C289: Standard Test Method for Potential Alkali-Silica Reactivity of Aggregates (Chemical Method)

Z. ASTM C309-98a Standard Specification for Liquid Membrane-Forming Compounds for Curing Concrete

AA. ASTM C494/C494M: Standard Specification for Chemical Admixtures for Concrete

BB. ASTM C827: Standard Test Method for Change in Height at Early Ages of Cylindrical Specimens from Cementitious Mixtures

CC. ASTM E154: Standard Test Methods for Water Vapor Retarders Used in Contact with Earth Under Concrete Slabs, on Walls, or as Ground Cover

DD. Federal Specification CCC-C-467C: Cloth, Burlap Jute or Kenaf

1.03 SUBMITTALS

A. Submit samples of fine and coarse aggregates to the laboratory employed by Contractor in ample time for determination of concrete mix design. Submit at least 2 cubic feet of each size of aggregate in suitable containers. All samples plainly and neatly labeled indicating source, place of usage, date, and name of collector.

B. Submit a list of concrete materials and concrete mix designs proposed for use. Include the results of all tests performed to qualify the materials and to establish the mix designs.

C. Submit the following information, if ready-mixed concrete is used.

1. Physical capacity of mixing plant.

2. Trucking facilities available.

3. Estimated the average amount of concrete that can be produced and delivered to the site during a normal 8-hour day, excluding the output to other customers.

D. Certificates: Submit manufacturer's cement mill test, admixtures, curing materials, and non-shrink non-metallic grout. For each shipment of cement, regardless of quantity, furnish certified copies of mill test reports to engineer prior to incorporation of the cement into the work.

E. Furnish to engineer copies of all delivery tickets for each load of concrete delivered to the site. Batch ticket shall be written in ink with each batch delivered to site as specified in ASTM C94 and in addition state:

1. Load number.

2. Class of concrete (compression strength).

3. Type, brand and amount of cement.

4. Type, brand and amount of admixture.

5. Information necessary to calculate the total mixing water.

6. Maximum size of aggregate.

7. Weights of fine and coarse aggregates.

8. Amount of concrete (cubic yards).

9. Ingredients certified as being previously approved by the Engineer.

10. Signature of ready-mix representative.

1.04 QUALITY ASSURANCE

A. Concrete work shall be conformance with ACI-301, with one or more copies kept in the Project Field Office at all times.

B. Admixture, including calcium chloride, causing accelerated setting of cement in concrete not to be used.

C. No concrete shall be placed until engineer has accepted materials and mix design.

D. The actual proportions of cement, aggregates, water and admixtures, when used, for each class of concrete, shall produce the capacity conforming to requirements set forth in part called Mixes. Nevertheless, for durabililty, the minimum water-cement ratio of 0.5.

E. Concrete, shall produce the capacity conforming to requirements set forth in part called Mixer.

F. Provide one set of test samples of cement and aggregates.

G. Laboratory cylinders shall be conforming to ASTM C192.

H. If job site concrete is not of required strength, produce new design mix at no additional compensation.

I. Quality of Concrete Work:

1. Make all concrete solid, compact and smooth, and free of laitance, cracks and cold joints.

2. All concrete for liquid retaining structures, and all concrete in contact with earth, water, or exposed directly to the elements shall be watertight.

3. Cut out and properly replace to the extent ordered by the engineer, or repair to the satisfaction of the engineer, surfaces which contain cracks or voids, are unduly rough, or are in any way defective.

4. All leaks through concrete, and cracks, holes or other defective concrete in areas of potential leakage, shall be repaired and made watertight by the contractor.

5. Repair, removal, and replacement of defective concrete as ordered by the engineer shall be at no additional cost to the owner.

J. Hot Weather Placing:

1. When hot weather conditions exist that would seriously impair the quality and strength of concrete, place concrete in compliance with ACI 305 and as herein specified.

2. Cool ingredients before mixing to maintain concrete temperature at time of placement below 26° C when the temperature is rising and below 30° C when the temperature is falling. Mixing water may be chilled, or chopped ice may be used to control the concrete temperature provided the water equivalent of the ice is calculated in the total amount of mixing water.

3. Cover reinforcing steel with water-soaked burlap if it becomes too hot, so that the steel temperature will not exceed the ambient air temperature immediately before embedment in concrete.

4. Wet forms thoroughly before placing concrete.

5. Do not place concrete at a temperature so as to cause difficulty from loss of slump, flash set, or cold joints.

6. Do not use set-control admixtures unless approved by the engineer in mix designs.

7. Obtain engineer's approval of other methods and materials proposed for use.

K. Mix Design, Test and Adjustment:

1. All concrete mix designs shall be done in accordance with ACI 301, Method 1, proportioned by laboratory trial mixtures with cement, aggregate, admixture and water actually proposed for use.

2. Mix design shall be prepared by an independent accredited testing laboratory employed by Contractor.

3. Additional testing shall be required when unsatisfactory results from original sample batches or introduction of new materials sources.

4. All tests for design and adjustment shall be done by same laboratory employed by Contractor.

5. The testing facility shall not be the same used for field quality control testing.

6. Submit written reports to the engineer of proposed mix of concrete at least 15 days prior to start of work. Do not begin concrete production until mixes have been approved by the engineer.

7. Adjustment to Concrete Mixes: Mix design adjustments may be requested by contractor when characteristics of materials, job conditions, weather, test results, or other circumstances warrant; at no additional cost to and as accepted by engineer.

8. Laboratory test data for revised mix designs and strength results must be submitted to and accepted by engineer before using the revised mixes.

L. All materials for concrete, including water, shall be measured with equipment and facilities suitable for accurate measurement and capable of being adjusted in conformance with ASTM C94. Scales shall be certified by Sealer of Weights and Measures within one year of use. Site-mixed concrete plant and all operations pertaining to production of concrete is subject to inspection and specific acceptance of Engineer.

M. Control test specimens, slump tests shall be taken in field.

N. Methods of Sampling and Testing:

1. Fresh Concrete Sampling: ASTM CI-72

2. Specimen Preparation: ASTM C31

3. Compressive Strength: ASTM C39

4. Slump: ASTM C143

5. Unit Weight: ASTM C138

6. Obtaining Drilled Cores: ASTM C42

O. Acceptance of Structure: Acceptance of completed concrete work requires conformance with dimensional tolerances, appearance, and strength as specified herein, in the Construction Drawings and in Chapter 18 of ACI 301.

P. Concrete Tolerances:

1. Finish Tolerances

a) As defined in ACI 301, Table 4.3.1.

b) Maximum horizontal deviation in visible concrete structures not to exceed 1/4 inches from level in 10 feet as determined by a 10 feet straight edge placed anywhere on the slab in any direction unless otherwise specified or indicated.

1.05 DELIVERY

A. All materials used for concrete must be kept clean and free from all foreign matter during transportation and handling and kept separate until measured and placed in the mixer. Bins or platforms having hard clean surfaces shall be provided for storage of the aggregates.

B. Transport ready-mixed concrete to site in watertight agitator or mixer trucks.

C. Dispatch trucks from batching plant so they arrive at site just before concrete is required, thus avoiding excessive mixing of concrete while waiting or delays in placing successive layers of concrete in forms.

D. Concrete delivered without a complete delivery batch ticket will be rejected.

1.06 JOBSITE CONDITIONS

A. At least 20 hours prior to actual placement notify to the Engineer the intention to produce and place concrete.

B. Do not place concrete until conditions and facilities for making, storage, handling, and transportation of control test specimens are in compliance with ASTM C31.

PART 2. <u>PRODUCTS</u>

2.01 MATERIALS

A. Portland cement: American-made, according to ASTM C150, made by a well-known acceptable manufacturer and produced by not more than one plant. For exposed concrete use cement of uniform color.

1. Type I or II for all work.

2. Type III and air entraining cement shall not be permitted.

3. Do not use cement which has deteriorated because improper storage or handling. Lumpy, wetted, partially or wholly set cement is sufficient cause to reject entire shipment.

4. Place, time, frequency and method of sampling shall be determined by Engineer in accordance with particular conditions of project.

B. Water for concrete shall be potable and free from injurious amounts of oil, acid, alkali, organic matter or other deleterious substances, and conform to the requirements for water specified in ASTM C94.

C. Aggregates:

1. Fine aggregates for normal weight concrete shall consist of well graded natural sand conforming to ASTM C33 and to the following requirements:

a) Fineness modulus: 2.50 to 3.10.

b) Organic impurities: Color intensity not darker than two-third (2/3) intensity of standard color solution. (Not darker than Organic Plate No. 2, determined by ASTM C 40.)

c) Mortar strength: Compression ratio shall be 95 percent, minimum. Portland cement type II shall be used for mortar.

d) Soundness: Weighted average loss after 5 cycles of magnesium sulfate soundness test shall be 10 percent, maximum.

e) The fine aggregate shall be clean, sharp, natural sand free from loam, clay, lumps or other deleterious substances. Dune sand, bank run sand and manufactured sand are not acceptable.

2. Coarse aggregates for normal weight concrete shall consist of well graded gravel or crushed stones conforming to ASTM C33 and to the following requirements:

a) Organic impurities: Color intensity not darker than one-third (1/3) intensity of standard color solution. (Not darker than Organic Plate No. 1 determined by ASTM C40.)

b) Soundness: Weighted average loss after 5 cycles of magnesium sulfate soundness test shall be 14 percent, maximum.

c) The coarse aggregate shall be clean, uncoated and processed aggregate containing no clay, mud, loam, or foreign matter.

3. Aggregate shall not exceed the following sizes:

a) 2 inches for massive concrete (30 inches or thicker).

b) 1-1/2 inch for footings, foundation mats, and walls 8 inch or more in thickness.

c) 3/4 inch for slabs, beams, girder, columns, and walls less than 8 inch thick.

d) 1/2 inch for fireproofing around structural steel beams and columns.

4. Insure that aggregates intended for use in concrete is potentially non-reactive when tested in accordance with ASTM C289.

5. Do not use aggregates containing soluble salts or other substances such as iron sulfides, pyrite, marcasite, ochre, or other materials that can cause stains on exposed concrete surfaces.

D. Admixtures: Provide admixtures produced by established reputable manufacturers, and use in compliance with the manufacturer's printed instruction. Do not use admixtures that have not been incorporated and tested in the accepted mixes, unless otherwise authorized in writing by the engineer.

1. General Requirements:

a) When using admixtures maintain the compressive strength and water-cement ratios given in part called Mixes of this section. When using admixtures in solution form, include the solution quantity in water-cement ratio calculations.

b) Do not use calcium chloride and admixtures causing accelerated setting of cement.

c) Do not use combinations of admixtures and cements producing erratic and undesirable results with aggregates.

2. Water Reducer:

a) Use admixture meeting ASTM C494, Type A, Pozzolith 200 N by Master Builders Co., Cleveland, OH; WRDA, Dewey & Almy Chemical Div. of W. R. Grace Co., Cambridge MA; Eucon WR-75 by The Euclid Chemical Co., Cleveland, OH.

b) Do not use admixture in greater dosages than recommended by manufacturer. Do not exceed permitted dosage of admixture that results in increase in drying shrinkage of concrete in excess of 10 percent.

c) Ensure that strength of concrete with proposed admixture, after 48 hours, is not less than strength of similar concrete without admixture.

E. Curing Compound: Consists of liquid which, when applied to fresh concrete by means of spray gun, will form an impervious membrane over the exposed surface of concrete with compound not preventing future bond of floor covering, and concrete floor treatment. Use Type I-D compound with red fugitive dye, Class B, in conformance with ASTM C309.

F. Waterproof Curing Sheet: Shall be used waterproof paper or white opaque polyethylene film conforming to ASTM C171.

G. Cloth, Burlap, Jute or Kenaf: CCC-C-467C.

H. Vapor Barrier: Shall be used polyethylene sheet, 6 mils thick conformed to ASTM E154.

I. Dovetail Anchor Slots:

1. 24-gage hot-dip galvanized steel, foam-filled No. F-17 manufactured by The Dayton Sure-Grip & Shore Co., Miamisburg, OH.

2. No. 100 manufactured by Heckmann Products, Inc., Chicago, IL.

3. No. 305 manufactured by Hohmann & Barnard Inc., Hauppauge, NY.

Or acceptable equivalent, compatible with dovetails.

J. Adjustable Inserts:

1. Ductile iron wedge inserts, Type F-7, manufactured by The Dayton Sure-Grip & Shore Co., Miamisburg, OH.

2. Malleable iron wedge inserts, Type HW, manufactured by Hohmann & Barnard Inc., Hauppauge, NY.

3. Malleable iron peerless wedge inserts manufactured by Richmond Screw Anchor Co., Inc., Ft. Worth, TX.

4. All inserts shall be galvanized in accordance with ASTM A123 and A153.

K. Non-shrink, Non-metallic Grout:

1. Shall consist of a commercial formulation of proven satisfactory performance, requiring only addition of water, with minimum 28 day compressive strength of 5,000 psi, with zero percent volume change for plastic state shall be in accordance with ASTM C827, and zero percent shrinkage for hardened state in accordance with ASTM C157.

2. Grout (5-star) manufactured by U.S. Grout Corp., Old Greenwich, CT.

3. Upcon 262 manufactured by Upco Div. of Emhard Chemical Group, Cleveland, Oh.

4. Or acceptable equivalent.

2.02 MIXES

A. General:

1. Concrete may be produced at batch plants or it may be produced by the ready-mixed process. Batch plants shall comply with the recommendations of ACI 304, and shall have sufficient capacity to produce concrete of the qualities specified, in quantities required to meet the construction schedule. All plant facilities are subject to testing laboratory inspection and acceptance of the engineer.

B. Ready-Mix Concrete:

1. Comply with the requirements of ASTM C 94, and as herein specified. Proposed changes in mixing procedures, other than herein specified, must be accepted by the ENGINEER before implementation.

2. The ready-mixed concrete shall be composed of portland cement, aggregate, water, and admixtures. Secured from single local plant, conforming to ASTM C94 and capable of being placed without segregation and developing specified characteristics.

3. Plant equipment and facilities: Conform to National Ready-Mix Concrete Association "Plant and Delivery Equipment Specification".

4. Mix concrete in revolving type truck mixers which are in good condition and which produce thoroughly mixed concrete of the specified consistency and strength.

5. Do not exceed the proper capacity of the mixer.

6. Mix concrete for a minimum of two minutes after arrival at the job site, or as recommended by the mixer manufacturer.

7. Do not allow the drum to mix while in transit.

8. Mix at proper speed until concrete is discharged.

9. Maintain adequate facilities at the job site for continuous delivery of concrete at the required rates.

10. Provide access to the mixing plant for the engineer at all times.

C. Site Mixing:

1. Mix concrete with an approved rotating type batch machine, except where hand mixing of very small quantities may be permitted. The batch mixer shall be with a capacity of not less than 1/2 cubic yard. The volume of mixed batch not to exceed the manufacturer's rated capacity of mixer.

2. Replace mixer blades when they have lost 10 percent of their original height.

D. All concrete shall be of homogeneous structure for every part of work, having the required strength, watertightness, and durability. Give careful attention to selection of materials, mixtures, placing, spading, vibrating, and curing.

E. In both, ready-mix and mixed concrete in the field, maintain equipment in proper operating condition, with drums cleaned before charging each batch. Schedule rates of delivery in order to prevent delay of placing the concrete after mixing, or holding drymixed materials too long in the mixer before the addition of water and admixtures.

F. Classes: The resistance of concrete shall be as specified in the Construction Drawings. If the resistance of concrete used in structural members is not specified in the Construction Drawings then

the Contractor shall request this information from the Engineer. The resistance of non-structural concrete not specified in the Construction Drawings shall be Class A or B as specified.

Class A and Class B concrete shall meet the following limiting requirements:

Class	Minimum compressive strength at 28 days, psi.
A	3,000
B	2,500

1. Class A concrete is a design mix to produce a resistance of 3,000 PSI. This concrete shall be steel reinforced and includes the following non-structural uses:

a) Walls

b) Slabs

c) Beams

d) Columns

2. Class B concrete is a design mix to produce a resistance of 2,500 PSI. Class B concrete shall be placed without reinforcing except where otherwise shown in the Construction Drawings or directed by the Engineer. This concrete shall be used in the following locations and whenever low-strength concrete is permitted, unless otherwise indicated in the Construction Drawings:

a) Concrete fill

b) Equipment bases

c) Pipe supports

d) Curbs and gutters

e) Sidewalks

f) Thrust blocks

g) Encasements

h) Duct banks

G. Consistency: Carefully mix concrete to produce an homogeneous, fluid material capable of being worked into constricted areas of forms, corners and around embedded items, without segregation or free water bleeding. Provide slump ranges listed in the following table. Measure consistency shall be by ASTM C143.

Portion of Structure	Slump, Maximum (inches)	Slump, Minimum (inches)
Massive sections	2	1
Footings, foundation mats, and walls 8 inches or more thick	3	1
Slabs, beams, girders, columns, walls less than 8 inch thick, and fireproofing around structural beams and columns	4	1

Provide additional slump if needed for pumped concrete to provide the required slump in this table at discharge of pumpline.

2.03 FORMS

A. Forms shall be in accordance with ACI 347.

B. Design:

1. Studs and wales shall be spaced to prevent deflection of form sheeting.

2. Forms shall be sufficiently tight to prevent leakage of grout and cement caste during placing of concrete.

3. Bottom of forms shall be accurately fitted and securely attached to preceding lift to assure smooth, completed surfaces free from irregularities and offsets.

4. Joints between form panels shall be arranged vertically and horizontally to match architectural lines and construction joints.

5. Provide temporary openings in wall and column forms, where needed to facilitate cleaning and inspection.

6. Construct the forms readily removable without impact or damage to concrete.

C. Concrete Surface Not Exposed to View: Concrete surfaces which will not be exposed to view in finished work shall be formed with sound, tight lumber or other material producing an equivalent finish.

D. Concrete Surfaces Exposed or Painted:

1. Concrete surfaces to be exposed or painted shall be formed with material that is not reactive with concrete.

2. Surfaces shall be equivalent in smoothness and appearance to that produced by new plywood panels conforming to PS 1, Exterior Type, Grade B-B, 4 by 8 foot panels except where otherwise approved or required by location of openings, architectural lines or joints.

3. Cut surfaces shall be treated with form coating.

4. Do not use form materials with defects that would impair texture and appearance of finished surfaces.

5. Form lining, if used, shall be installed over solid backing.

6. Round concrete column shall be formed with prefabricated seamless removable type forms.

E. Form Ties:

1. Form ties shall be factory-fabricated and snap-off ties of design that will not permit form deflection and will not spall concrete upon removal.

2. Solid backing shall be provided for each tie.

3. Ties shall be fitted with devices that will leave holes in concrete surface not less than 3/8 inch nor more than 1 inch in diameter and 1 inch deep.

4. Portion of tie remaining permanently in concrete to be at least one-inch back from any concrete surface.

5. In walls subjected to hydrostatic pressure provide ties which pass through the wall. This includes exterior foundation walls with acceptable waterstops, such as metal washers, securely and continuously fastened to ties.

PART 3. EXECUTION

3.01 GENERAL

A. Contractor shall place, finish, protect and cure cast-in-place concrete as indicated and specified. Contractor shall provide all labor, materials, equipment and incidentals as shown, specified and required to furnish and install the concrete. The concrete shall be composed of portland cement, fine and coarse aggregate, water, and approved admixtures.

B. Batch, mix, and deliver portland cement concrete in accordance with ASTM C94. Batch all constituents to produce concrete in accordance with ACI 301, Chapter 7, and as specified.

3.02 FORMS:

1. Inspect forms and embedded items before placing concrete. Ensure that forms and excavation are free from water, dirt, debris, and foreign matter when concrete is placed.

2. Use forms for all concrete including footings and foundation mats.

3. Ensure that forms are true to line, and within the specified Finish Tolerances. Correct deviations by and at expense of Contractor as directed by Engineer, even to extent of tearing down and rebuilding concrete.

4. Ensure that all forms have acceptable nonstraining oil or liquid form coating before placing reinforcement.

5. Thoroughly clean all surfaces in contact with concrete. Repairs all damaged surfaces and withdraw all projecting nails before reusing form material.

B. Walls, Columns or Piers: Arrange with suitable openings so concrete shall be placed to prevent segregation and accumulations of hardened concrete on forms or reinforcement above fresh concrete, unless special spouts are used to place concrete. Construction joints shall be properly keyed, unless otherwise indicated, and treated.

C. Removal of Forms:

1. Do not remove forms until concrete has aged as follows:

a) Beams, slabs, columns, and piers: 7 days minimum

b) Walls and vertical surfaces: 3 days minimum

2. Do not remove forms and/or shores under beams, slabs, columns, and piers until concrete has attained at least 70 percent of specified 28 day strength and also sufficient strength to support safely its own weight and construction live loads, unless otherwise indicated.

3.03 JOINTS AND EMBEDDED ITEMS

A. Construction Joints:

1. Make construction joints straight and as inconspicuous as possible, and in exact vertical or horizontal alignment with structure.

2. Thoroughly clean surface of concrete at construction joints and remove laitance prior to placing adjoining concrete. As allowance for shrinkage, do not place concrete against hardened side of construction joint for at least 48 hours. Where bonding required, use only approved materials.

B. Embedded Items:

1. Clean embedded items of oil or foreign matter.

2. Install in formwork requisite inserts, anchors, sleeves, and other items specified under other sections of these specifications. Close ends of conduits, piping and sleeves embedded in concrete with caps or plugs.

3. Complete required tests on embedded piping before starting concrete placement.

4. Before depositing concrete check location and support of piping, electrical conduits, and other items fully or partially embedded.

3.04 VAPOR BARRIER

A. Installation:

1. Vapor barrier material shall be installed under all interior floor slabs on ground when indicated in the Construction Drawings.

2. The film shall be laid with a six inches lap at joints, and joint seal shall be taped as recommended by the manufacturer of the film. Film cut for slap openings shall be taped to the pipe, conduit or other items passing through the slab. Tape shall be as recommended by the film manufacturer.

3. The installed vapor barrier shall be without punctures and adequately protected until concrete is placed.

4. Do not place concrete over vapor barrier until the Engineer has approved the condition of the film. If breaks do occur in the film, patch and seal to the satisfaction of the Engineer.

3.05 TRANSPORTING AND MIXING

A. **General**: Conform to concreting procedures set forth in ACI 304 and requirements specified.

1. In ready-mix concrete, transport the concrete to jobsite in revolving drum truck mixers in manner that assures efficient delivery to point of placement without significantly altering specified properties of water-cement ratio, slump, and homogeneity.

2. Discharge concrete into forms within 1-1/2 hours after cement has entered mixing drums and within 45 minutes after water has been added to the dry ingredients.

3. Do not add retempering water at jobsite, nor exceed specified maximum water content.

4. Take care to avoid spilling and separation of the mixture during transportation.

5. Do not place concrete in which the ingredients have been separated.

6. Use suitable and approved equipment for transporting concrete from mixer to forms.

B. **Conveying**: Convey concrete from mixer to the place of final deposit by one of following methods which permit handling at specified slump without segregation.

1. Buckets or hoppers with discharge gates having a clear opening equal to not less than one third of the interior horizontal area, maximum, or five times the aggregate size being used, maximum, whichever is greater, and side slopes not less than 60 degrees to horizontal.

2. Buggies or wheelbarrows equipped with pneumatic tires.

3. Chutes, constructed of metal or metal-lined, with round bottom, and an inclined slope between two to three feet horizontally to one foot vertically, and sufficient capacity to avoid overflow. Provide sketches showing methods by which chutes will be employed when requesting such approval.

4. Circular drop pipes will have a top diameter of at least eight times maximum aggregate size, but not less then 4 in., or tapered to not less than six times the maximum aggregate size.

C. Site Mixing:

1. Minimum mixing time for each batch (from time when all solid materials and water are in drum) not less than 1 minute for mixers of one cubic yard capacity or less. For mixers of larger capacity, mixing time increased 15 seconds for each additional cubic yard or fraction thereof of additional capacity. Revolve mixer at uniform peripheral speed of about 200 fpm. Discharge the entire batch before mixer is recharged.

2. Remove hardened accumulations of cement and concrete frequently from drum and blades to assure acceptable mixing action.

3. Use quantities such that a whole number of bags of cement is required, unless otherwise permitted.

D. Remixing:

1. Remix concrete, which has become compacted or segregated during transportation to or on site, just prior to being placed in forms.

2. Do not deposit partially hardened concrete in forms. Retempering of partially hardened concrete is not permitted. Remove all partially hardened concrete from site at no additional compensation.

3.06 PLACING

A. Whenever possible, place concrete during normal working hours. When concrete placement schedules require concrete placement at times other than normal working hours, notify engineer of the special conditions at least 48 hours in advance of placement.

B. Deposit concrete at its final position in formwork, to preserve slump, and homogeneity.

C. Place concrete in horizontal layers 1-1/2 to 2 feet thick completely across forms, avoiding inclined layers and cold joints. Where placement consists of several layers, place concrete at such a rate that concrete that is being integrated with fresh concrete is still plastic. On sloping surfaces, place concrete at lower portion of slope first.

D. Do not allow concrete to fall freely in forms to cause segregation (separation of coarse aggregate from mortar).

E. Do not move concrete horizontally more than five feet from point of discharge. Space points of deposit not more than 10 feet apart.

F. Exercise care to avoid splashing the forms and the reinforcing located above the level of the concrete being placed. Regulate placing of concrete so that pressure caused by wet concrete will not cause distortion, leakage or movement in forms.

G. Remove temporary spreaders in forms when concrete placing has reached the elevation of such spreaders.

H. All methods of placing concrete subject to engineer's acceptance in writing prior to placement.

I. Placing Concrete Slabs:

1. Deposit and consolidate concrete slabs in a continuos operation within the limits of construction joints, until the placing of a panel or section is completed.

2. Consolidate concrete during placing operations using mechanical vibrating equipment, so that concrete is thoroughly worked around reinforcement and other embedded items and into comers.

3. Consolidate concrete placed in beams and girders of supported slabs, and against bulkheads of slabs on ground, as specified for formed concrete structures.

4. Bring slab surfaces to the correct level. Smooth the surface, leaving it free of humps or hollows. Do not sprinkle water on the plastic surface. Do not disturb the slab surfaces prior to beginning finishing operations.

J. Pump Concrete:

1. Use equipment and procedures suitable and adequate to maintain steady flow at point of discharge and to maintain specified properties of unit weight and slump. Adjustments in concrete proportions as necessary to provide specified concrete properties.

2. Pumping through aluminum piping prohibited.

3. Use pipe having at least three times nominal maximum size of coarse aggregate but not less than 4 inches.

4. All sampling done at point of discharge.

5. Provide labor and assistance as required in obtaining and handling test specimens.

K. Consolidation:

1. Consolidate using approved mechanical vibrators operated within mass of concrete and conforming to procedures set forth in ACI 309, and the specified requirements.

2. Conduct vibration in systematic manner with regularly maintained vibrators, and with sufficient backup units at job site. Use largest and most powerful vibrator, with minimum frequency of 8000 vibrations per minute, and sufficient amplitude to effectively consolidate concrete.

3. Insert and withdraw vibrator vertically at uniform spacing over entire area of placement. Space the distance between insertions such that "spheres of influence" of each insertion overlaps.

4. Place concrete in horizontal lifts, and insert vibrator rapidly to bottom of layer, and at least six inches into underlying layer, hold stationary for several seconds, then withdraw slowly at rate of about 3 inches per second. Conduct vibration to produce concrete of uniform texture and appearance, free of honeycombing, streaking, cold joints, or visible lift lines.

5. Use additional vibration on vertical surfaces and all architectural concrete requiring as-cast finish and to bring full surface of mortar gainst forms, to eliminate all objectionable air voids, bug holes, and other surface defects. Additional procedures for vibrating concrete as follows:

a) Reduce distance between internal vibration insertions and increase time for each insertion.

b) Insert vibrator as close to face of form as possible, without contacting form.

c) Use spacing as supplement to vibration where particularly difficult conditions exist.

3.07 FIELD TESTING

A. General: Contractor shall furnish an approved testing laboratory for the test required by this Section. Contractor shall furnish certified laboratory personnel to take samples for the tests required.

1. Allow taking the control test specimens, slump tests and others. Allow free access to select the samples.

2. Reject concrete not meeting specified requirements, and remove from site at no additional compensation.

B. Test Specimens: A certified employee of laboratory employed by Contractor shall take the test specimens in conformance with ASTM C31. Engineer may take additional specimens.

1. Take sets of four field control test specimens for compression testing of each class of concrete. The specimens shall be taken not less than once a day, nor less than once for each 150 cubic yards of concrete and nor less than once each 5,000 square feet of surface area of one side of slabs or walls. Record truck and load number from delivery slip as well as the concrete placement location on each test specimen.

2. Furnish tightly constructed 6 inches diameter by 12 inches long nonabsorbent cylinder molds. Firmly braced the molds on wooden boxes for initial curing and storage from time of fabrication until delivery to testing laboratory. Use molds of same type and manufacture for all test specimens. The laboratory employed by the Contractor shall deliver the molds, field fabricated concrete test cylinders and deliver them to the testing laboratory. Leave molds on cylinders until they are received by the testing laboratory.

3. Test two of each set of four specimens at seven days, and if the seven-day strength is deficient, notify Contractor and Engineer. Test two remaining cylinders at twenty-eight days. Evaluation and acceptance of concrete conforming to ACI 318, Section 4.7.

If further strength evaluation is required, Contractor shall borne all associated costs of such tests, including taking test cores from structure, compression testing and load testing on the structure. This work shall be done under the direction of an independent accredited testing laboratory, approved by the Engineer. If the load test is done and any part of work cannot pass load tests, conforming to ACI 318, Chapter titled Strength Evaluation of Existing Structures, remove concrete from site and replace in accordance with contract plans and specifications, at no additional compensation.

C. Slump Tests: Taken by Engineer or certified laboratory employee furnished by Contractor in conformance with ASTM C143.

3.08 CURING AND PROTECTION

A. General:

1. Beginning immediately after placement, protect concrete from premature drying, excessively hot or cold temperatures, and mechanical injury. Maintain concrete with minimal moisture loss at relatively constant temperature. Continuously cure concrete for period of not less than seven days after placement. Materials and methods of curing subject to acceptance by Engineer.

2. Continuously cure concrete for period of not less than seven days after placing.

3. Comply with curing procedures set forth in ACI 301, applicable portions of ACI 308, and requirements specified.

4. Hot weather concreting in accordance with ACI 305.

B. Methods of Curing:

1. Unformed Surfaces: Immediately after completing finishing operations and water film has evaporated from surface, or as soon as marring of concrete will not occur, cover and cure entire surface of newly placed concrete. Protect finished slabs from direct rays of sun to prevent checking and crazing.

2. Formed Surfaces: Minimize moisture loss in formed surfaces exposed to heating by sun, by keeping forms wet until safely removed. Immediately following form removal, keep surface continuously wet by water spray or water saturated fabric. Liquid membrane curing compound may be substituted for water curing.

3. Water Curing: Wherever feasible, use water curing for unformed surfaces. Continuously water-cure all exposed concrete by ponding, immersion, spraying, sprinkling, or saturated materials such as burlap or cotton mats kept wet with soil soaking hose and maintained in intimate contact with concrete surface at all times.

4. Membrane Curing:

a) Use liquid membrane curing compounds where water curing is not feasible as a temporary method of curing when finishing operations necessitate delay in start of water curing.

b) Apply membrane-curing compound uniformly over concrete surface by means of accepted mechanical spray machine at rate of not less than 1 gallon per 150 square feet of surface. Agitate curing material in supply container immediately before apply, and thoroughly agitate during application, for uniform consistency and dispersion of pigment.

c) Do not use curing compounds on surfaces to receive concrete paint, tile, concrete fills and toppings, or other application requiring positive bond.

d) Respray concrete surfaces which have been subjected to rainfall within 3 hours after curing compound has been applied, by method as specified for initial application.

5. Sealing Materials:

a) Use common sealing materials such as plastic film, waterproofing (kraft), and paper, only with the acceptance of Engineer.

b) Lap adjacent sheets minimum of 12 inches. Use sheets of sufficient length to adequately cover the sides of concrete member.

c) Place sheet materials only on moist concrete surfaces. If surface appears dry, wet with fine spray. Presence of moisture on concrete surfaces at all times during prescribed curing period is proof of acceptable curing using sheet material.

C. Protection from Mechanical Injury: During curing period, protect concrete from damaging mechanical disturbances, such as load stresses, heavy shock, and excessive vibration. Protect all finished concrete surfaces from damage by construction equipment, materials or methods, application of curing procedures and rain or running water. Do not load self-supporting structures in such a manner as to overstress concrete.

3.09 REPAIR

A. General: Immediately after form removal, repair all surface defects. Surface defects include tie holes, air voids, bug holes, with a nominal diameter or depth generally greater than 1/4 inch, honeycombed areas, visible construction joints, fins and burrs, and any other defects. Make concrete repairs as necessary, resulting in concrete surfaces of uniform color and texture, free of all irregularities.

B. Repair of Defective Areas:

1. Remove honeycombed and other defective concrete down to sound concrete. Saw-cut edges 1 inch minimum depth perpendicular to surface or slightly undercut. No featheredges permitted. Dampen area to be patched and area at least 6 inches wide surrounding it to prevent absorption of water from patching mortar.

2. Make patching mixture of same materials and of approximately same proportions as used for concrete, except omit coarse aggregate. Use not more than 1 part of cement to 2-1/2 parts of sand by damp loose volume. Substitute white portland cement for a portion of regular grey portland cement to produce patching mix matching surrounding concrete in color when dry. Determine proportion of white portland cement by trial mixes and test areas, prior to repair the actual defective areas.

3. Use no more mixing water than necessary for handling and placing. Mix patching mortar in advance and allow it to stand with frequent manipulation with a trowel, without addition of water, until it has reached stiffest consistency that will permit placing.

4. After surface water has evaporated from area to be patched, brush bond coat of neat cement well into surface. Thoroughly consolidate mortar into place and strike off so as to leave patch slightly higher than surrounding surface. To permit initial shrinkage, leave patch undisturbed for at least 1 hour before being finally finished. Keep the patched area damp for 5 days. Do not use metal tools in finishing patch in formed wall to be exposed.

C. Tie Holes: After being cleaned and thoroughly dampened, fill tie holes with patching mortar.

D. The final determination of the acceptability of concrete finishes and the repair of surface defects has to be made by Engineer.

3.10 FINISHES

A. Locations:

1. Steel-trowel finish to all top, substantially horizontal, exposed surfaces not otherwise specified or indicated including top of walls, and to floors scheduled to receive carpeting, resilient tile, and thin-set application of ceramic tile, and to roof surfaces to which roof insulation or roofing are to be applied.

2. Hand steel-trowel finish to all surfaces shaped with or without forms and over which liquids will flow.

3. Rough finish to floors scheduled to receive ceramic tile and quarry tile (mud base), terrazzo, or concrete fills and toppings.

4. Broomed finish to exterior walkways, entrance platforms, sidewalks, and roadways.

5. Finishes to certain other concrete surfaces shall be indicated on Construction Drawing schedules.

B. Descriptions:

1. **Steel-Trowel Finish**: Remove excess laitance from surfaces given steel-trowel finish, by tamping, screeding and preliminary magnesium or bull-floating. When slab has hardened sufficiently so that water and fine material will not work to top, compact surface with motor-driven floats of disk type and trowel smooth with one steel troweling operation. Dusting with dry cement or other mixtures or sprinkling with water shall not be permitted in finishing. Leave surfaces with smooth hard finish free of blemishes and true to maximum tolerance of one-quarter inch in ten feet.

2. **Rough Finish**: Prepare surfaces given rough finish by tamping with special tools to force coarse aggregate away from surface, then screeding with straight edges to bring surfaces to required line, and then magnesium or bull floating.

3. **Broomed Finish**: Steel-trowel surface, then broom normal to direction of travel (unless otherwise indicated) with fine hair stable broom to produce non-slip surface of uniformly good appearance. Broom finish tolerance for true planes within one-quarter inch in ten feet.

4. **Rough Form**: Remove fins and finish flush with parent concrete; make repairs prior to receiving any coatings.

5. **Smooth Form**: Remove fins and finish flush with parent concrete, make repairs. Wet and rub finned and repaired areas with carborundum brick or other abrasive until uniform color and texture are produced. Rubbing shall be completed not later than the following day after repairs and removal of forms.

3.11 METALWORK IN CONCRETE

A. Ensure that castings, inserts, conduits, and other metalwork are encased in concrete with precautions taken to prevent metalwork being displaced or deformed.

B. Set anchor bolts by means of templates.

C. Build dovetail anchor slots into new concrete against which concrete masonry units is to be laid. Place vertically at 24 inches centers where facing brick etc. passes by concrete and one continuous anchor slot where facing brick, etc. abuts the concrete work.

SECTION 040612
CEMENT MORTAR

PART 1. GENERAL

1.01 SUMMARY

1.01.1 SECTION INCLUDES

This section includes furnishing all necessary materials, equipment and labor to perform all the cement mortar work shown in the Construction Drawings, as specified and as ordered by the Engineer.

1.02 QUALITY ASSURANCE

A. Comply with applicable requirements for materials, proportions and installation established by the Puerto Rico Builidng code.

B. Source Quality Control. Do not change source or brands of mortar materials during the course of the work.

C. Refernece Standards Comply with applicable provisions and recommendations of the following, except as otherwise shown or specified.

1. ASTM C 5, Quicklime for Structural Purposses.

2. ASTM C 91, Masonry Cement

3. ASTM C 136, Sieve or Screen Analysis of Fine and Coarse Aggregates.

4. ASTM C 144, Aggregate for Masonry Mortar

5. ASTM C 150, Portalnd Cement.

6. ASTM C 207, Hydrated Lime for Masonry Purposes

7. ASTM C 270, Mortar for Unit Masonry

1.03 SUBMITTALS

A. Shop Drawings. Submit for approval copies of manufacturer's specifications and instruction for each manufactured product.

1.04 PRODUCT DELIVERY, STORAGE AND HANDLING.

A. Delivery of Materials. Manufactured materials, such as cement and lime, shall be delivered and stored in their original containers, plainly marked with identification of materials and manufacturer.

B. Storage of Materials. Store mortar materials, off the ground in a dry location and under a properly constructed shelter using tarpaulins, felt paper, or polyethylene sheets.

PART 2. PRODUCTS

2.01 MATERIALS

A. Portland cement: ASTM C 150, Type I, nonstaining of natural color.

B. Hydrated Lime: ASTM C 207, Type S, or lime putty ASTM C 5

C. Sand Aggregates: ASTM C 144

D. Water: Free from injurious amounts of oils, acids, alkalis, or organic matter, and clean, fresh and potable.

2.02 MORTAR MIXES

A. General

1. Anti-Freeze Admixture or agents: not permited

2. Calcium Chloride: not permitted

B. Mortar for all concrete unit masonry: Comply with ASTM C 270, Table 2, except limit materials to those specified herein, and limit cement-to-lime ration by volume to the following:

Type S: Not more than 1/2 part lime per part of Portland Cement.

C. Grout Fill Around Reinforcement in Masonry Lintels: Portland cement, sand, gravel and water, to be proportioned as required to provide a 28-day minimum compresive strength of 3000 pounds per square inch.

PART 3. EXECUTION

A. The Contractor shall furnish all necessary materials, equipment and labor to perform all the cement mortar work shown in the Construction Drawings, specified and ordered by the Engineer.

3.02 PREPARATION

A. Measurement of Materials:

1. Mortar cement and hydrated lime: Batched by the bag.

2. Sand: Batched by volume in suitably calibrated containers, provided proper allowance is made for bulking and consolidation and for weight per cubic foot, of contained moisture.

3. Propoortion of volumetric mixtures: One 94 pound sack of portland cement and one 50 pound sack of hydrated lime constitute nominal one cubic foot.

4. Shovel measurement: Not permitted

B. Mortar Mixing.

1. Type of mixer: Machine mix in approved mixer in which the quantity of water is accurately and uniformly controlled.

2. Mixing Time: Not less than five minutes with approximately two minutes for mixing the dry materials and not less than three minutes of continued mixing after water has been added.

3. Hydrated Lime for Mortar Requiring Lime Content. Use dry-mix method. Turn over together the materials for each batch until the even color of the mixed, dry materials indicates that cementious material has been thoroughly distributed throughout the mass, then add water to obtain required plasticity.

4. Lime putty if approved for use shall be prepared in accordance with ASTM C 5.

5. Waterproffing Admixture: Add to mortar mix for all exterior masonry in strict accordance with manufacturer's instructions.

3.03 FIELD QUALITY CONTROL

A. Contractor shall engage an independent testing laboratory approved by Engineer, to take samples and conduct tests to evaluate air entrainment, water retention and the compliance of materials with the specifications and to determine the compressive strength of mortar and grout.

1. Conduct Tests in accordance with ASTM C 91.

2. Make tests results avaialble to Engineer prior to the commencement of work.

3. After the initial test, Engineer may rquire a maximum of 5 additional tests to be conducted at his discretion.

4. The Contractor shall furnish the necessary labor and materials and shall assist in molding, storing and curing test specimens when required by the Engineer.

SECTION 040850
MASONRY ACCESORIES

PART 1. GENERAL

1.01 SUMMARY

1.01.1 SECTION INCLUDES

This section includes providing labor, material, equipment and others required for installing all masonry accessories including the following: continuous horizontal wire reinforcing and ties, anchoring devices, miscellaneous accessories, and others indicated in the Construction Drawings and/or specified by Engineer.

1.02 QUALITY ASSURANCE

A. Comply with applicable provisions of the Puerto Rico Building Code.

B. Comply with the applicable provisions and recommendations of the following, except where otherwise shown or specified.

1. ASTM A 82, Cold-Drawn Steel Wire for Concrete Reinforcing

2. ASTM A 116, Zinc-coated (galvanized) Iron or Steel Farm-Field and Railroad Right of Way Wire Fencing.

3. ASTM A 153, Zinc Coating (Hot Dip) on Iron and Steel Hardware.

4. ASTM A 615, Deformed and Plain Billet Steel Bars for Concrete Reinforcement.

1.03 SUBMITTALS

1.03.1 SHOP DRAWING

A. Submit under provisions of Section 013340.

B. Submit shop drawings for approval to Engineer with copies of manufacturer's specifications and installation instructions for each masonry accessory required. Include data substantiating that materials comply with specified requirements.

1.04 PRODUCT DELIVERY, STORAGE AND HANDLING

A. Deliver accessories in original packages, plainly marked with identification of materials and manufacturer. Store and cover materials to prevent corrosion and deterioration.

PART 2. PRODUCTS

2.01 MATERIALS

A. Continuous Wire Reinforcing and Ties for Masonry. Welded wire units prefabricated in straight lengths of not less than 10 feet, with matching corner "L" units. Fabricate from cold drawing steel wire complying with ASTM A 82, with deformed continuous 9 gage side rods and plain 9 gage cross rods, with unit width of 1-1/2 to 2 inches less than thickness of wall or partition. All reinforcing shall be hot dipped galvanized after fabrication with 1.5 ounces per square foot of zinc coating complying with ASTM A153, Class B-2 unless otherwise specified.

1. For all single-wythe masonry walls, use units fabricated as follows:

a) Truss-type fabricated with two side rods and continuous diagonal cross-rods spaced not more than 16 inches on centers.

b) Product and manufacturer. Provide one for the following:

1) Single-Wythe Wall Truss by Dur-O-Wall Incorporated.

2) Blok-Truss AA600 by ML Wire Products Company.

3) Or approved equal.

B. Anchoring Devices for Masonry: Use bolts and rods of the type and size shown. Fabricate steel with 1.5 ounces per square foot of zinc coating complying with ASTM A153, Class B-2.

C. Miscellaneous Masonry Accessories

1. Reinforcing Bars: Deformed steel, ASTM A615, Grade 60 of the sizes shown.

2. Cavity Fill Mesh: Provide hot dip galvanized 1/2 inch mesh hardware cloth, backed with asphalt impregnated cloth below. Install below all block courses that are to be filled with mortar.

3. Premolded Control Joint Strips: Solid rubber strips with a Shore A durometer hardness of 60 to 80, designated to fit standard sash block and maintain lateral stability in masonry wall, size and configuration shall be as shown on Construction Drawings.

a) Product and Manufacturer:

1) Rubber Control Joint by Jim Taylor Inc.

2) Blok-Tite AA2000 by AA Wire Products Company.

3) Approved equal.

PART 3. <u>EXECUTION</u>

A. Contractor shall provide labor, material, equipment and others required for installing all masonry accessories indicated in the Construction Drawings including continuous horizontal wire reinforcing

and ties, anchoring devices, miscellaneous accessories, and others indicated in the Construction Drawings or required by Engineer.

SECTION 042212
CONCRETE BLOCKS

PART 1. GENERAL

1.01 SUMMARY

1.01.1 SECTION INCLUDES

This section includes furnishing and placing all concrete blocks shown in the Construction Drawings, those specified and those ordered by the Engineer. It also includes providing openings in masonry to accommodate the Work under this and other Sections and building into the masonry all items such as sleeves, anchor bolts, inserts and all other items to be embedded in masonry for which placement is not specifically provided under other Sections.

1.02 SUBMITTALS

1.02.1 SAMPLES

A. The Contractor shall submit to the Engineer for approval a sample of each size of concrete masonry units and a sample of each item to be embedded in masonry including steel reinforcement, sleeves, anchor bolts, joint materials, inserts and others.

1.03 QUALITY ASSURANCE

A. Comply with applicable requirements of the Puerto Rico Building Code.

B. Construction Tolerances:

1. Variation from plumb: For lines and surfaces of vertical grooves, walls and arrises, do not exceed 1/4 inch in 10 feet.

2. Variation from Level: For lines of exposed lintels, sills, horizontal grooves and other conspicuous lines, do not exceed 1/4 inch in 10 feet.

3. Variation of Linear Building Line: For position shown in Construction Drawings and related portion of walls do not exceed 1/4 inch in 10 feet.

4. Variation in Cross-Sectional Dimensions: For columns and thickness of walls, from dimensions shown, do not exceed minus 1/4 inch nor plus 1/2 inch.

5. Comply with applicable provisions and recommendations for the following, except as otherwise shown or specified:

a) National Concrete Masonry Association, "Guide Specifications" and "Technical Bulletins"

b) UL, Design Numbers U901 through U908

1.03.2 MOCK-UP

A. Provide mock-up only when so required in the Construction Drawings or in the specifications. If mock-up is required obtain approval prior to proceeding with the work.

1.04 PRODUCT DELIVERY AND STORAGE AND HANDLING

A. Protect masonry materials during storage from wetting by rain, with a properly erected shelter.

B. Handle materials in a manner that minimizes chips, cracks, voids, discolorations or other defects which be visible or cause staining in finished Work.

1.05 JOB CONDITIONS

A. Protect partially completed masonry against weather, when Work is not in progress, by covering top of walls with strong, waterproof, nonstaining membrane. Extend membrane at least 2 feet down both sides of walls and hold securely in place.

B. Do not apply concentrated loads for at least seven days after completing masonry columns or walls.

C. Protect masonry construction, by methods acceptable to Engineer, from direct exposure to wind and sun when the surrounding air temperature is 99°F in the shade, with relative humidity less than 50 percent.

PART 2. PRODUCT

2.01 MATERIALS

A. Concrete Masonry Units.

1. Hollow Load Bearing Block Units: ASTM C90, Grade N, Type I; normal weight.

2. Non-Load Bearing Block Units: ASTM C129, Type I; normal weight.

3. Decorative Units: ASTM C90, Grade S, Type I.

4. Masonry units shall be modular sized. Provide special units for 90-degree corners, bond beams, lintels. Same for coved base and bull nosed corners when these features are required on the plans. Masonry untis shall be 16-inch long by 8-inch high by 8, 6, 4 or 3-inch thick as require for the respective work shown in Construction Drawings and for work ordered by the Engineer

5. Compression Strength. Concrete Masonry Blocks shall have an average ultimate compression strength of 700 lbs. per square inch of gross cross-section-all area at 28 days after manufactured as laid in the wall.

6. Other Requirements. The weight of concrete shall be at least 125 lb/cub.ft. The moisture content requirements shall be as required by Table 3 of ASTM C129.

7. Dimensions and permissible variations. Minimum face shell thickness shall be not less than ½ in. No overall dimension (width, height, and length) shall differ by more than +-1/8 in. from the specified standard dimensions.

8. Finish and appearance. All units shall be sound and free of cracks or other defects that interfere with the proper plament of the units or significantly impair the strength or permanence of the construction.

9. Curing method. After manufactured, blocks shall be air, water or steam cured. Water curing is preferred due to the resultant uniformity of strength and other characteristic.

10. Masonry units shall be stored for at least 10 days after manufactured.

B. Reinforcement and Anchorage.

1. Single Wythe Joint Reinforcement: Truss type every course required; galvanized steel construction; 3/16 inch (4.8 mm) side rods with No. 9 cross ties.

2. Multiple Wythe Joint Reinforcement: Truss type as required; without moisture drip; galvanized steel construction; 3/16 inch (4.8 mm) side rods with No. 9 cross ties.

PART 3. EXECUTION

3.01 CONSTRUCTION

A. The Contractor shall furnish and place all concrete blocks shown in the Construction Drawings or ordered by the Engineer.

3.02 INSTALLATION

A. Build chases and recesses as shown in the Construction Drawings. Provide not less than 8 inches of masonry between chase or recess and jamb of openings, and between adjacent chases and recesses.

B. Leave openings for equipment, piping, ducts, and other items to be installed subsequent to starting of masonry work. After installation of said items, complete masonry work to match work immediately adjacent to openings.

C. Cut masonry units using motor driven saws to provide clean, sharp, unchipped edges. Cut units as required to provide pattern shown and to fit adjoining work neatly. Use full size units without cutting wherever possible.

3.03 LAYING WALLS

A. General

1. Unless otherwise specified, use mortar specified under section titled "Cement Mortar" and as follows:

a) For all work, use type S mortar.

b) Use grout fill for structural requirements and for grouting reinforcing steel in masonry lintels and bond beams.

c) Do not use mortar or grout which has begun to set or if more than 1/2 hour has elapsed since initial mixing. Retermper mortar during the 1/2 hour period only as required to restore workability.

2. Layout walls in advance for accurate spacing of surface pattern bond with uniform joint widths and to properly locate openings, expansion joints, returns and offsets. Avoid the use of less than half size units at corners, jambs and wherever possible at other locations.

3. Lay up walls plumb and true to comply with specified tolerances, with courses level, accurately spaced and coordinated with other work.

4. Pattern Bond: Lay concrete masonry units in a stack bond pattern.

5. Concrete block walls shall be true and plumb and built to the thickness indicated in the Construction Drawings. All units shall be sound and free of cracks or other defects that would interfere with the proper placing of the unit or impair the strength or permanence of the construction. A proper bond shall be maintained throughout the length of the wall

6. Where interior partitions meet other partitions or exterior walls, a firm bonds shall be provided with approved metal ties.

7. Where units are to be used in exposed wall construction, the face or faces that are to be exposed shall be free of chips, cracks or other imperfections.

B. Mortar Bedding and Jointing:

1. Lay solid masonry units with completely filled bed and headjoint; butter ends with sufficient mortar to fill head joints and shove into place. Do not slush head joints.

2. Lay hollow concrete masonry units with full mortar coverage on horizontal and vertical face shells.

3. Maintain joint widths except for minor variations required to maintain pattern bond alignment and continuity. Lay walls with 3/8 inch joints.

4. Tool interior joints slightly concave. Strike exterior joints flush. Rake out mortar in preparation for application of calking or sealant where required.

5. Remove masonry units disturbed after laying; clean and reset fresh mortar. Do not pound corners at jambs to fit stretcher units, which have been set in position. If adjustments are required, remove units, clean off mortar and reset in fresh mortar.

6. Mortar joints shall be not more than 1/2 inch thick with full mortar coverage on vertical and horizontal face shells. They shall be struck flush to the face of the wall. Vertical joints shall be shoved tight.

C. Stopping and Resuming Work. Rake back 1/2 block length in each course; do not tooth. Clean exposed surfaces of set masonry units lightly if required, and remove loose masonry units and mortar prior to laying new masonry.

D. Built-in Work

1. As the work progresses, build-in items shown, specified or required by Engineer. Fill cores in one block width solidly with masonry around built-in items.

2. Fill space between hollow metal frames and masonry solidly with mortar.

3. Where built-in items are to be embedded in cores of hollow masonry units, place a layer of cavity fill mesh in the joint below and rod mortar or grout into core.

E. Horizontal Joint Reinforcing

1. Provide continuous horizontal joint reinforcing as shown on Construction Drawings and as specified. Fully embed longitudinal side rods in mortar for their entire length with a minimum cover of 1/2 inch. Lap reinforcement a minimum of 6 inches at ends of units. Do not bridge control and expansion joints with reinforcing.

2. Reinforce all walls with continuous horizontal joint reinforcing unless specifically noted or specified to be omitted.

3. Space continuous horizontal reinforcing as follows:

a) For single wythe walls, space reinforcing as required by Puerto Rico Building Code, but not more than 16 inches on centers vertically.

4. Reinforce masonry openings greater than 12 inches wide, with horizontal joint reinforcing placed in two horizontal joints approximately 8 inches apart, immediately above the lintel and immediately below the sill. Extend reinforcing a minimum of 24 inches beyond jambs of the opening.

5. In addition to wall reinforcing, provide additional reinforcing at openings as required to comply with the above.

F. Vertical Reinforcing

1. Provide vertical reinforcing as indicated in the Construction Drawings. If not indicated in the Consruction Drawings vertical reinforcing shall be at least #3@16" from top to bottom. Vertical reinforcement shall be embedded at the top and bottom of the block wall.

G. Control Joints.

1. Provide vertical control and isolation joints in masonry where shown on Construction Drawings. Build-in related items as work progresses. Rake out mortar in preparation for application of

calking and sealant. Provide masonry accessories where shown on Construction Drawings. Build flanges of factory fabricated expansion joint strips into masonry.

H. Lintel and Bond Beams

1. Provide steel lintels as specified, where shown on the Construction Drawings.

2. Provide minimum bearing at each jamb, of 6 inches for openings less than 6 feet 0 inches wide, and 8 inches for wider openings.

3. Provide masonry lintels where shown and wherever openings of 16 inches or more are shown without structural steel lintels. Provide formed in place masonry lintels.

a) Unless otherwise shown provide one horizontal number six deformed reinforcing bar for each 4 inches of wall thickness.

b) Use specifically formed "U" shaped lintel units with reinforcing bars places as shown filled with grout fill specified under Section titled "Mortar". Temporarily support formed-in-place lintels.

3.04 REPAIR, PAINTING AND CLEANING

A. Remove and replace masonry units which are loose, chipped, broken, stained or otherwise damages, or if units do not match adjoining units as intended. Provide new units to match adjoining units and install in fresh mortar or grout, pointed to eliminate evidence of replacement.

B. Pointing. During the tooling of joints, enlarge any voids or holes, except weep holes, and completely fill with mortar. Point up all joints at corners, openings and adjacent work to provide a neat, uniform appearance, properly prepared for application of calking or sealant compounds.

C. Protect the work from deterioration, discoloration or damage during subsequent construction operations.

D. Cleaning Exposed, Unglazed Masonry Surfaces:

1. Wipe off excess mortar as the work progresses. Dry brush at end of day's work.

2. Final Cleaning. After mortar is thoroughly set and cured, clean sample wall area of approximately 20 square feet as described below. Obtain Engineer's acceptance of sample cleaning before proceeding to clean remainder of masonry work.

a) Dry clean to remove large particles of mortar using wood paddles and scrappers. Use chisel or wire brush if required.

b) Presoak wall by saturating with water and flush off loose mortar and dirt.

c) Scrub down wall with stiff fiber brush and solution of 1/2 cup of trisodium phosphate and 1/2 cup of household detergent dissolved in one gallon of water.

d) Rinse walls, using clean, pressurized water, to neutralize cleaning solution and remove loose material.

e) Acid cleaning of masonry will not be permitted.

3.05 QUALITY CONTROL

3.05.1 TESTS

A. Contractor shall contract an independent laboratory approved by Engineer to make at least one test of each type indicated in below to each type of concrete block used in the project. Engineer may order additional tests. Contractor shall collaborate with this laboratory providing the labor, tools, equipment and others required to carry out the tests and transport the samples to the required destinations.

B. Each type of concrete block shall be tested for dimensions, compressive strength, absorption, unit weight and moisture content according to ASTM C140.

C. Loadbearing concrete block strength shall be tested for strength according to American Society for Testing Materials C-90. Non-loadbearing blocks shall be tested for strength according to ASTM C129.

SECTION 050900
ANCHOR BOLTS, EXPANSION ANCHORS AND CONCRETE INSERTS

PART 1. GENERAL

1.01 SUMMARY

1.01.1 SECTION INCLUDES

A. Provide anchor bolts, expansion anchors and concrete inserts including but not limited to:

1. Hangers and brackets.

2. Equipment.

3. Handrails.

4. Piping.

5. Tanks.

6. Grating and floor plate.

7. Electrical, Plumbing and VAC Work.

8. Wood and plastic fabrications.

9. Partitions and ceilings.

B. This Section includes all bolts, anchors and inserts required for the Work but not specified under other Sections.

1.02 REFERENCES

A. ASTM A 307. Carbon Steel Externally and internally Threaded Standard Fasteners.

B. ASTM A 193. Alloy-Steel and Stainless Steel Bolting Materials for High-Temperature Service.

1.03 SUBMITTALS

1.03.1 SHOP DRAWINGS

A. Submit shop drawings in accordance with the requirements of Section 013340 for the following:

1. Setting drawings and templates for location and installation of anchorage devices. Copies of manufacturer's specifications, load tables, dimension diagrams and installation instructions for the devices.

1.03.2 QUALITY ASSURANCE/CONTROL SUBMITTALS

A. Design Data.

1. When the size, length or load carrying capacity of an anchor bolt, expansion anchor, or concrete insert is not shown in the Construction Drawings, provide the size, length and capacity required to carry the design load times a minimum safety factor of four.

2. Determine design loads as follows:

a) For equipment anchors, use the design load recommended by the manufacturer and approved by the ENGINEER.

b) For pipe hangers and supports, use one half the total weight of pipe, fittings, valves, accessories and water contained in pipe, between the hanger or support in question and adjacent hangers and supports on both sides.

c) Allowances for vibration are included in the safety factor specified above.

d) Comply with applicable provisions of the Puerto Rico Building Code.

PART 2. PRODUCTS

2.01 MATERIALS

A. Anchor Bolts.

1. Provide stainless steel bolts complying with ASTM A 193, AISI Type 316. Other AISI types may be used subject to ENGINEER approval.

B. Expansion Anchors.

1. All expansion bolts below the maximum water level shall be stainless steel.

2. Size required for the concrete strength specified.

3. Stud type (male thread) or flush type (female thread), as required.

4. Provide manufacturer's technical literature for expansion bolts proposed for use on this project.

5. Product and Manufacturer: Provide anchors by one of the following:

a) Molly Division of USM Corporation.

b) HILTI Incorporated.

c) Or equivalent.

C. Concrete Inserts.

1. For piping, grating and floor plate, provide malleable iron inserts.

2. Provide those recommended by the manufacturer for the required loading.

3. Finish shall be black.

D. Powder actuated fasteners and other types of bolts and fasteners not specified herein shall not be used unless approved by ENGINEER.

PART 3. EXECUTION

3.01 INSTALLATION

A. Drilling equipment used and installation of expansion anchors shall be in accordance with manufacturer's instructions.

B. Assure that embedded items are protected from damage and are not filled in with concrete.

C. Expansion anchors may be used for hanging or supporting pipe two inches diameter and smaller.

D. Use concrete inserts for pipe hangers and supports for the pipe size and loading recommended by the insert manufacturer.

E. Unless otherwise shown or approved by ENGINEER conform to following for expansion anchors:

1. Minimum anchor spacing on centers: ten diameters.

2. Minimum distance to edge of concrete: five diameters.

3. Increase dimensions above if required to develop the required anchor load capacity.

3.02 CLEANING

A. After embedding concrete is placed, remove protection and clean bolts and inserts.

SECTION 051206
STRUCTURAL STEEL

PART 1. GENERAL

1.01 SUMMARY

1.01.1 SECTION INCLUDES

This section consists of furnishing, installing and achieving the complete erection of all structural and miscellaneous steel as shown on Construction Drawings.

1.02 DEFINITION

A. "Structural Steel" is that work defined in the American Institute of Steel Construction (AISC) Code of Standard Practice, and as otherwise shown on Construction Drawings.

1.03 SUBMITTALS

A. General. Submit the following:

B. Product Data or manufactureres's specifications and printed installation instructions for following products. Include laboratory test reports and other data to show compliance with specifications (including specified standards).

Structural stell (each type), including copies of mill reports covering chemical and physical properties for the following:

High-strength bolts (each type), including nuts and washers.

Include Direct Tension Indicators if used.

Structural steel primer paint.

Shrinkage-resistant grout.

Test reports conducted on shop- and filed-bolted and welded connections. Include data on type(s) of tests conducted and results.

Copies of each survey showing elevations and locations of base plates and anchor bolts to receive structural steel and final elevations and locations for major members. Indicate discrepancies betwen actual installation and Contract Documents.

Shop Drawings, including complete details and schedules for fabrication and assembly of structural steel members, procedures and diagrams.

Include details of cuts, connections, camber, holes and other pertinent data. Indicate welds by standard AWS symbols. Show size, length and type of each weld.

Provide setting drawings, templates and directions for installation of anchor bolts and other anchorages to be installed as work of other sections.

1.04 QUALITY ASSURANCE

A. Comply with provisions of following, except as otherwise indicated:

1. AISC Code of Standard Practice for Steel Buildings and Bridges with commentary.

2. AISC Load and Resistance Factor Design Specification for Structural Steel Buildings, including Commentary.

3. Load and Resistance Factor Design Specification for Structural Joints using ASTM A325 or A490 Bolts approved by the Research Council on Structural Connections.

4. American Welding Society (AWS) D1.1 Structural Welding Code - Steel.

5. ASTM A6 General Requirements for Delivery of Rolled Steel Plates, Shapes, Sheet Piling and Bars for Structural Use

6. Society of Protective Coatings (SSPC): Steel Structures Painting Manual, Volume 2, Systems and Specifications.

7. AISC Structural Steel Detailing Manual.

8. American Society for Testing and Materials.

a) ASTM A36: Standard Specification for Structural Carbon Steel.

b) ASTM A123: Standard Specification for Zinc (Hot Galvanized) Coatings on Iron and Steel Products.

c) ASTM A153: Standard Specification for Zinc Coating (Hot Dip) on Iron and Steel Hardware.

d) ASTM A307: Standard Specification for Carbon Steel Bolts and Studs, 60,0-00 PSI Tensile Strength.

e) ASTM A325: Standard Specification for Structural Bolts, Sheet, Heat Treated, 120/105 ksi Minimum Tensile Strength.

f) ASTM A449: Standard Specification for Quenched and Tempered Steel Bolts and Studs.

g) ASTM A563: Standard Specification for Carbon and Alloy Steel Nuts.

h) ASTM F844: Standard Specification for Washers, Steel, Plain (Flat), Unhardened for General Use.

B. Fabricator Qualifications

1. The structural steel fabricator shall be AISC certified-Complex Steel Building Structures.

2. Qualifications for Welding Work: Use prequalified weld procedures or welding procedures and welding operators in accordance with AWS "Qualification" requirements.

a) Provide certification that welders employed in work have satisfactorily passed AWS qualification tests.

b) If recertification of welders is required, retesting will be Contractor's responsibility.

1.05 DELIVERY, HANDLING AND STORAGE:

A. Deliver materials to site at such intervals to insure uninterrupted work progress.

B. Deliver anchor bolts and anchorage devices, which are to be embedded in cast-in-place concrete or masonry, in ample time to avoid delay of work.

C. Store materials to permit easy access for inspection and identification. Keep steel members off ground by using pallets, platforms, or other supports. Protect steel members and packaged materials from corrosion and deterioration. If bolts and nuts become dry or rusty, clean and relubricate before use. Do not store materials in a manner that might cause distortion or damage to members or suppporting structures. Repair or replace damaged materials or structures as directed.

D. Store structural shapes off ground on suitable supports, with webs of flanged shapes vertical.

PART 2. <u>PRODUCTS</u>

2.01 MATERIALS

A. Structural Steel.

1. Metal surfaces, General: For fabrication of work that will be exposed to view, use only materials that are smooth and free of surface blemishes including pitting, rust and scale and roughness. Remove such blemishes by grinding, or by welding and grinding, prior to cleaning, treating and applying surface finishes.

a) Structural Steel Shapes: ASTM A992

b) Plates, Angels and Bars: ASTM A36

c) Cold-Formed Steel Tubing: ASTM A500 Grade B

d) Headed Type Shear Connectors: ASTM A108, Grade 1015 or 1020 cold finished carbon steel, with dimensions complying with AISC Specifications.

e) Steel Castings: ASTM A27, Grade 65-35, medium-strength carbon steel.

f) Anchor Rods: F1554 Grade 36, nonheaded type unless otherwise indicated

g) Unfinished Threaded Fasteners: ASTM A307, Grade A, regular low-carbon steel bolts and nuts. Provide hexagonal heads and nuts for all connections.

h) High-Strength Threaded Fasteners: Heavy hexagon structural bolts, heavy hexagon nuts and hardened washers as follows:

1) Quenched and tempered medium-carbon steel bolts, nuts and washers, complying with ASTM A325. Where indicated as galvanized, provide units that are zinc coated, either mechanically deposited complying with ASTM B695, Class 50, or hot-dip galvanized complying with ASTM A153.

i) Tension Control Bolts (as required): ASTM F-1852

j) Electrodes for Welding: Comply with AWS Code

k) Steel Primer Paint Fast-curing lead- and chromate-free, universal modified alkyd primer with good resistance to normal atmospheric corrosion, complying with performance requirements of FS TT-P-664.

l) Nonmetallic Shrinkage-Resistant Grout: Premixed, nonmetallic, noncorrosive, nonstaining product containing selected silica sands. Portland cement, shrinkage compensating agents, plasticizing and water-reducing agents, complying with CE-CRD-C621.Available products: Subject to compliance with requirements, products that may be incorporated in the work include, but are not limited to, the following:

1) 100 Non-Shrink Gout (Non-Metallic), Conspec, Inc.

2) Supreme Grout, Cormix, Inc.

3) Sure Grip Grout, Dayton Superior

4) Euco N.S., Euclid Chemical Company

5) Crystex, L&M Construction Chemicals, Inc.

6) Masterflow 713, Master Builders

7) Sealtight 588 Grout, W.R. Meadows

8) Propak, Protex Industries, Inc.

9) Set Non-Shrink, Set Products, Inc.

10) Five Star Grout, U.S. Grout Corporation

2.02 FABRICATION

A. Design. The fabricator shall complete the design of members and connections for any portions of the structure not indicated on the contract drawings. Such design shall conform to the requirements of

the current issue of the references in this Section. Drawings showing such designs shall be comparable in extent of information and detail to those issued for bidding. The design drawings shall be submitted for approval, no chances or modifications shall be made without written authorization.

B. Shop Fabrication and Assembly. Fabricate and assemble structural assemblies in shop to greatest extent possible. Fabricate items of structural steel in accordance with AISC Specifications and as indicated on approved shop drawings. Provide camber in structural members where indicated.

C. Properly mark and match-mark materials for field assembly. Fabricate for delivery sequence that will expedite erection and minimize field handling of materials.

D. Where finishing is required, complete assembly, including welding of units, before start of finishing operations. Provide finish surfaces of members exposed in final structure free of markings, burrs and other defects.

E. Connections. Weld or bolt shop connections, as indicated.

F. Bolt field connections, except where welded connections or other connections are indicated. Provide high-strength threaded fasteners for all bolted connections, except where unfinished bolts are indicated.

G. Hight Strength Bolted Construction. Install high-strength threaded fasteners in accordance with RCSC Specification for Structural Joints Using ASTM A32 or A490 Bolts. Use snug-tight bolts, except where noted and as recommended in the RCSC Specification for Structural Joints Using ASTM A325 or A490 Bolts.

H. Welded Construction. Comply with the AWS D1.1 Code as referenced in the AISC Specification for the Design and Fabrication of Steel Buildings.

I. Assemble and weld built-up sections by methods that will produce true alignment of axes without warp.

J. Build up welded doorframes attached to structural steel framing. Weld exposed joints continuously and grind smooth. Plug-weld steel bar stops to frames, except where shown ere movable. Secure removable stops to frames with countersunk, cross-recessed head machine screws, uniformly spaced not more than 10" o.c., unless otherwise indicated.

K. Holes for Other Work. Provide holes required for securing other work to structural steel framing and for passage of other work through steel framing members, as shown on final shop drawings.

L. Cut, drill, or punch holes perpendicular to metal surfaces. Do not flame-cut holes or enlarge holes by burning.

M. Expansion Joints: Provide expansion joints in steel shelf angles when part of structural steel frame, locate at vertical cladding expansion joints as indicated on Construction Drawings.

2.03 SHOP PAINTING

A. General. Shop-paint structural steel, except those members or portions of members to be embedded in concrete or mortar. Paint embedded steel that is partially exposed on exposed portions and initial 2" of embedded areas only.

Do not paint surfaces to be welded or high-strength bolted with friction-type connections. Apply 2 coats of paint to surfaces that are inaccessible after assembly or erection. Change color of second coat to distinguish it from first.

Color of Second Coat. Grey.

Surface Preparation. After inspection and before shipping, clean steelwork to be painted. Remove loose rust, loose mill scale and spatter, slag, or flux deposits. Clean steel in accordance with Society for Protective Coatings using SP-3 "Power-Tool Cleaning".

Painting. Immediately after surface preparation, apply structural steel primer paint.

2.04 GALVANIZING

A. Hot-Dip Galvanized Finish. Apply zinc coating by the hot-dip process to structural steel indicated for galvanizing according to AST M A123. Galvanize structural steel in locations indicated.

2.05 SOURCE QUALITY CONTROL

A. General. Materials and fabrication procedures are subject to inspection and tests in mill, shop and field, conducted by a qualified inspection agency. Such inspections and tests will not relieve Contractor of responsibility for providing materials and fabrication procedures in compliance with specified requirements. Promptly remove and replace materials or fabricated components that do not comply.

B. Designed Members and Connections. Details shown are typical, similar details apply to similar conditions, unless otherwise indicated. Promptly notify Engineer whenever design of members and connections for any portion of structure are not clearly indicated.

PART 3. EXECUTION

3.01 GENERAL

A. Where indicated on Construction Drawings, joints shall be assembled by use of high tensile steel bolts in accordance with specifications approved by the Research Council on Riveted and Bolted Structural Joints of the Engineering Foundation.

B. Substitutions of sections or modifications of details, or both, shall be made only when warranted and approved by the Engineer.

C. The Contractor alone shall be responsible for all errors of fabrication and for the correct fitting of the Structural members shown on the shop drawings.

D. Templates shall be furnished as shown in the Construction Drawings. The Contractor shall furnish instructions for the setting of anchors and bearing plates and shall ascertain that the items are properly set during the progress of the work.

3.02 ERECTION

A. Surveys. Check elevations of concrete and masonry bearing surfaces, and locations of anchor rods and similar devices, before erection work proceed and report discrepancies to the owner's authorized representative. Do not proceed with erection until corrections have been made or until compensating adjustments to structural steel work have been agreed upon with the owner's authorized representative.

B. Temporary Shoring and Bracing. Provide temporary shoring and bracing members with connections of sufficient strength to bear imposed loads. Remove temporary members and connections when permanent members are in place and final connections are made. Provide temporary guy lines to achieve proper alignment of structures as erection proceeds.

C. Temporary Planking. Provide temporary planking and working platforms as necessary to effectively complete work.

D. Setting Bases and Bearing Plates. Clean concrete and masonry bearing surfaces of bond-reducing materials and roughen to improve bond to surfaces. Clean bottom surface of base and bearing plates.

Set loose and attached base plates and bearing plates for structural members on wedges or other adjusting devices.

Tighten anchor rods after supported members have been positioned and plumbed. Do not remove wedges or shims, but if protruding, cut off flush with edge of base of bearing plate prior to packing with grout.

Pack grout solidly between bearing surfaces and bases or plates to ensure that no voids remain. Finish exposed surfaces, protect installed materials and allow to cure.

For proprietary grout materials, comply with manufacturer's printed instructions.

E. Field Assembly. Set structural frames accurately to lines and elevations indicated. Align and adjust various members forming part of complete frame or structure before permanently fastening. Clean bearing surfaces and other surfaces that will be in permanent contact before assembly.

Level and plumb individual members of structure within specified AISC tolerances.

Establish required leveling and plumbing measurements at mean operating temperature of structure. Make allowances for difference between temperature at time of erection and mean temperature at which structure will be when complete and in service.

F. Erection Bolts. On exposed welded construction, remove erection bolts, fill holes with plug welds and grind smooth at exposed surfaces. Comply with AISC Specifications for bearing, adequacy of temporary connections, alignment and removal of paint on surfaces adjacent to field welds. Do not

enlarge unfair holes in members by burning or by using drift pins, except in secondary bracing members. Ream holes that must be enlarge to admit bolts.

G. Gas Cutting. Do not use gas-cutting torches in field for correcting fabrication errors in primary structural framing without the engineer's permission. Finish gas-cut sections equal to a sheared appearance when permitted.

H. Touch-Up Painting. Immediately after erection, clean field welds, bolted connections and abraded areas of shop paint. Apply paint to exposed areas using same material as used for shop painting. Comply with SSPC-PA 1 requirements for tough-up of field painted surfaces. Apply by brush or spray to provide minimum dry film thickness of 2.0 mils.

3.03 FIELD QUALITY CONTROL

A. General. The Contractor shall engage the services of a testing agency that must be approved by PRASA. The testing agency shall inspect high-strength bolted connections and welded connections and shall perform tests and submit test reports.

Testing Agency shall conduct and interpret tests, state in each report whether test specimens comply with requirements and specifically state any deviations therefrom. Contractor shall provide access for testing agency to places where structural steel work is being fabricated or produced so that required inspection and testing can be accomplished. The testing agency will review supplier's mill test reports for steel used in the project. The testing agency will report items that do not comply with ASTM material and test report requirements.

B. Shop and Field Welding, Inspection and Testing. The testing agency shall obtain copies of all welder certificates of welders assigned to the job. All welders shall meet AWS requirements. Reports shall include welder's certifications, type and location of defects found during inspections and the measures required and performed to correct such defects, statements of final approval of all welding of connections and other fabrication data and information pertinent to the safe and proper welding of connections.

Ascertain that proper weld metal, electrodes, procedures and sequences are being used.

Ascertain that fit-up, joint preparation, size, contour, extent of reinforcement and length and location of welds comply with requirements of AWS D1.1.

Ascertain that fabricator's and erector's procedures correct for distortion and shrinkage caused by welding operations.

C. Shop Fabrication. Verify that fabricator's quality control program provides for the above mentioned items and the following minimum requirements for welding. Inspect and test during fabrication in accordance with AWS Structural Welding Code and as follows:

1. Perform visual inspection on not less than 20% of welds.

2. Perform Nondestructive Test of Welds as follows:

3. **Fillet Welds**. Test not less than 10 percent of welds in accordance with magnetic particle testing.

4. **Full Penetration Welds.** Test 100 percent of welds in accordance with ultrasonic techniques.

5. **Embedded Plates and Assemblies with Welded Deformed Bar and/or Stud Anchors**: 50 percent of anchors shall be rapped with an 8 lb. hammer. Any that do not ring and 5 perce.t of all others shall be bent 15 degrees with a hammer test.

D. Field Welding. Inspect and Test for Conformance to AWS Requirements and as follows:

1. All welds shall be inspected visually.

2. **Fillet Welds**. Test 25 percent of al welds in accordance with magnetic particle testing.

3. **Partial Penetration Welds**. Test 100 percent of welds in accordance with ultrasonic testing techniques.

E. Welds that fail shall be rewarded and retested until they pass. The cost of retesting and rewelding shall be borne by Contractor.

F. Additional Testing in the Event of Rejected Welds: If more than 10 percent of any type of tested welds are rejected, an additional 20 percent of all such welds shall be tested in same manner. If more than 10 percent of these additional welds are defective and rejected then an additional 20 percent of such welds shall be tested. If more than 10 percent of this group are found rejectable then all welds shall be tested. The cost of this additional testing and rewelding shall be borne by the Contractor.

G. The testing agency welding inspector shall have authority to reject weldments on the basis of a visual inspection.

Testing agency welding inspector's reports shall contain, as a minimum, a description of each weld tested, the identifying mark of the welder responsible for the weld, a critique of defects noted by visual inspection or testing and a statement regarding the acceptability of the weld as judged by current AWS standards. Distribute reports as early as possible but not later than one week after the tests have been performed. Notify the Engineer immediately by phone and later in writing if the results require immediate comment.

H. Bolding. Inspect in accordance with RCSC Specification for Structural Joins and as follows:

Visually inspect all bolts. For Bolts Indicated to be "Slip Critical" (Friction Connections) check for proper tension by using methods defined in the RCSC Specification for Structural Joins Using ASTM A325 or A490 Bolts. Correct bolted connections that fail by replacing or retightening, and performing other corrective measures require by connection geometry and fit up. The cost of retest on connections that fail shall be borne by the Contractor.

For Bolts Not Indicated to be "Slip Critical": Inspect 5 percent of bolts by using wrench to verify that the plies of the connection are in firm contact, or "snug-tight".

SECTION 051240
ALUMINUM FRAMES AND COVERS

PART 1. GENERAL

1.01 SUMMARY

1.01.1 SECTION INCLUDES

This section consists furnishing and installing all aluminum frames and covers as shown in the Construction Drawings or that may be ordered by the Engineer including all necessary accessories, labor, tools and materials to complete the work.

PART 2. PRODUCTS

A. Checkered Plate Covers. Aluminum checkered plate covers and frames shall be lightweight, rustproof, non-sparking and non-magnetic, suitable for areas subject to weather, frequent washing, corrosion, etc. It shall be cold-forged aluminum as manufactured by Bustin Aluminum Product Corp., Irving Subway Grating Co., Reliance Steel Products Co., or equal.

Alloys and properties shall conform to the requirements stated in the latest edition of the structural Aluminum Handbook, Aluminum Company of America.

Manufacturer's name must be cast on each plate cover and frame.

B. Diamond Frame Pattern. Diamond frame pattern frame and cover shall conform to the designs shown, in weight, thickness of metal and cover design and no modification of design or substitution will be permitted unless approved in writing by the Engineer. Frame and cover shall be of a gauge sufficiently strong for the purpose for which it is intended, neatly welded and ground at corners.

Diamond frame pattern frames and covers shall be cast aluminum of cast abrasive surface. Floor access doors shall be Type K, single leaf aluminum or KD double leaf aluminum, both diamond pattern plates, as manufactured by the Bialco Company, New Haven Connecticut or equal.

Frame shall be ¼ ", extruded aluminum with built-in neoprene cushion and with strap anchors bolted to exterior. Door leaf shall be ¼ " aluminum diamond plate reinforced with aluminum stiffeners as required. Cast steel hinges shall be bolted to underside and pivot on torsion bars that counterbalance the door for easy operation.

The door shall open to 90 degrees and lock automatically in that position. A vinyl grip handle shall be provided to release the cover for closing. Doors shall be built to withstand a line load of 150 pounds per square foot, and equipped with a snap lock and removable handle. Manufacturer shall apply bituminous coating to exterior of frame.

Dimensions. Minimum dimension for any aluminum frame and cover shall be 30" x 30".

C. Other Aluminum Frame and Covers. All other aluminum frames and covers shall conform to the designs shown in weight, thickness of metal and cover design and no modification of design or

substitution will be permitted unless approved in writing by the Engineer. Frame and Cover shall be of a gauge sufficiently strong for the purpose for which it is intended, neatly welded and ground at corners.

All other aluminum, frames and covers shall be cast aluminum of cast abrasive surface equal or similar to those manufactured by Flockhart Foundry Company. All castings shall be of uniform quality, free from blow holes, porosity, shrinkage defects, scales, cracks or other injurious defects. Material used in manufacture of castings shall conform to ASTM specifications B26. Aluminum surfaces shall be furnished with sand blasted finish.

PART 3. EXECUTION

A. Contractor shall furnish and install all aluminum frames and covers as shown in the Construction Drawings or that may be ordered by the Engineer including all necessary accessories, labor, tools and materials to complete the work.

SECTION 055155
LADDER & SAFETY CAGE

PART 1. GENERAL

1.01 SUMMARY

1.01.1 SECTION INCLUDES

This section includes supplying all materials and installing ladder and safety cages where indicated in the Construction Drawings.

1.02 SUBMITTALS

1.02.1 SHOP DRAWINGS

A. The Contractor shall submit shop drawings for engineer's approval before supplying and installing ladder and safety cage.

1.03 REFERENCES

A. ASTM C-478-95a - Manhole Steps

B. ASTM C-165 - Steel Reinforcing Rods

C. ASSHTO M-199-811 - Manhole Steps

D. ASTM-4101-956 PP0344B33534Z02 Copolymer Polypropylene

E. OSHA Regulations

F. Federal Specifications RR-F-612E, Paragraphs 3.8 and 6.2e for non-sparking steps.

PART 2. PRODUCTS

A. Co-polymer polypropylene coated, steel ladder rungs. These shall be made of steel rods ½" on thickness, grade 60, and of the dimensions and shape shown in the Construction Drawings. The forged steel steps shall be coated with copolymer polypropylene plastic, with required thickness and configuration shown on Construction Drawings, as manufactured by M.A. Industries, Inc. or approved equal.

B. Safety Cage.

1. All ladder safety cage components shall be made with aluminum 6061-T6-alloy mill finish and all anchors to wall shall have stainless steel expansions.

2. The complete Safety Cage shall be made of aluminum of the best quality. The alloys and properties shall conform to the requirements stated in the latest edition of the Structural Aluminum Handbook, Aluminum Company of America.

3. The Safety Cage shall be formed as shown in the Construction Drawings by 1 ½" x ¼" bars, 2 ½" x 3/8" support bars bent with 13/16 hole for ¾" bolt or expansion anchor, 2" x ¼" intermediate hoop bars, 2 ½" x 3/8" rails and 4" x ¼" top and bottom hoop bars.

4. The pipe railings shall be constructed of the dimension shown in the Construction Drawings and shall be of extra-heavy weight Schedule 80 aluminum pipe, with anodized 204-Rl finish. All joints in the pipe railings shall be mitered, welded and ground smooth 50 as to present a smooth, uniform and pleasing appearance. Bends and hoops shall neatly made to the correct radius required without deforming the pipe. Expansion joints shall be provided in railings where required.

PART 3. EXECUTION

A. Contractor shall supply all materials, labor, equipment and install an aluminum ladder rungs at location indicated in the Construction Drawings according with dimensions and installation details shown therein.

1. Ladder rungs shall be set in place and securely embedded in the concrete, or set into walls after casting, provided that it complies with minimum pull-out strength required by referenced ASTM, OSHA and any other applicable standards, latest revision. Inserts for this purpose may be used, however, insert material to be used shall be non-corrosive.

2. After concrete surface is finished, rungs shall be cleaned of all dirt, mortar or other adhesions.

3. Ladder for Manholes. Manholes extending more than 2 ft. over finished grade shall have exterior ladder rungs.

B. Contractor shall furnish and install the specified safety cage at each ladder with depth of 20 ft. or more.

SECTION 055210
PIPE RAILING

PART 1. GENERAL

1.01 SUMMARY

1.01.1 SECTION INCLUDES

Section includes furnishing and installing the pipe railing shown in the Construction Drawings or ordered by the Engineer, including all necessary labor, tools, materials and accessories necessary to complete the work.

PART 2. PRODUCTS

2.01 MATERIALS

A. Pipe railing. Pipe railing shall be constructed of standard weight steel pipe, fiberglass-reinforced plastic, or aluminum, of the dimension shown in the Construction Drawings.

1. Steel pipe railing. Joints shall be welded and ground smooth. Post shall be leaded in sleeves set in the masonry and wall plates shall be bolted to the masonry with suitable expansion bolts. The use of wood plugs will not be permitted. Floor sleeves shall be covered with suitable flanged covers.

B. Aluminum pipe railing. All work shall be of the finest quality and shall be fabricated in a shop whose principal business is the manufacture of the highest-grade architectural metal work.

Heavy-duty pipe railings shall be constructed, as shown in the Construction Drawings extra-heavy weight schedule 80 aluminum pipe, with anodized 204-Rl finish. All joints in pipe railings shall be mitered, welded and ground smooth to presents a smooth, uniform and pleasing appearance. Bends shall be neatly made to the correct radius required without deforming the pipe. Expansion joints shall be provided in railings where required. Posts for the aluminum walkways shall be welded to the top and bottom flanges of the channel stringers.

Rails shall be supported at walls with aluminum flanges bolted to the wall and approved type of steel-expansion bolts. The used of wood plugs will not be permitted.

Railings shall not be fabricated until the supporting pipe sleeves have been placed and their exact locations determined. The railings shall then be made up to be rigid and secure.

C. Fiberglass reinforced plastic railing. Material of construction shall be pultruded structural fiberglass shape. Utilizing a synthetic surfacing veil for maximum chemical and ultraviolet resistance glass content shall be 50 percent. Comprising both longitudinal strands and continuous strand mat so aligned as to provide both longitudinal and transverse strength and prevent splitting due to laminar shear. The FRP shapes shall possess-class I fire retardant, with an ASTM E84 Flame-spread rating of 25 maximum. Color shall be safety yellow. Pultruded shapes shall be "Extren" series 525, as manufactured by Morrison Molded Fiberglass Co. on approve equal.

D. Galvanized Wrought Iron Railing. Railing shall be constructed of hot galvanized wrought iron pipe, 1 ½" diameter. Railing shall not be fabricated until the supporting pipe sleeves have been placed and their exact locations determined in accordance with the Construction Drawings or as ordered by the Engineer. The railing shall then be fabricated to the actual dimensions required. All field joints shall be made up to be rigid and secure.

Bend shall be neatly made to the correct radius required, without deforming the pipe. Posts for walkways shall be welded to the top and bottom flanges of the channel stringers.

Joints shall be welded and ground smooth so as to presents an uniform and pleasing appearance. Post shall be leaded in sleeves set in the masonry, and wall plates shall be bolted to the masonry with suitable expansion bolts. Expansion joints shall be provided in railings where required. The use of wood plugs will not be permitted. Floors sleeves shall be covered with suitable flanged covers.

All wrought iron pipe railing shall be made from genuine wrought iron manufactured from muck bar made form hand puddle iron only, without mixture of steel scrap, foreign iron scrap or swarf. All wrought pipe or approved equals, free form blisters patches laminations or cinders.

Weight of pipe shall conform as closely as possible to Brigg's American Standard, a maximum variation of two and one half (2.5%) per cent under five per cent (5%) over being permissible.

The pipes for railing shall be as those manufactured for a working pressure 125 pounds per square inch.

All pipe railing shall be secured accurately in the position shown on Construction Drawings or as may be ordered by the Engineer. Joints shall be made in the "Standard" way. Threads shall be cleaned and then coated with white lead before making connections. Joints shall be made perfectly tight and any defects shall be corrected.

1. **Cutting and threading.** In cutting the galvanized iron pipe, the work shall be done so as to leave a smooth end at right angles to the axis of the pipe.

E. Painting. All steel pipe railing shall receive one (1) shop coat of red lead and oil paint or other protective paints suitable as a base for the following specified field painting. Pipe railing shall be given two (2) field coats of Bitumastic No. 50 as manufactured by Koppers Company or approved equal.

PART 3. EXECUTION

The Contractor shall furnish and install the pipe railing shown in the Construction Drawings or ordered by the Engineer, including all necessary labor, tools, materials and accessories necessary to complete the work.

SECTION 055510
SAFETY TREADS FOR CONCRETE STAIRS

PART 1. GENERAL

1.01 SUMMARY

1.01.1 SECTION INCLUDES

This section consists of furnishing and placing at the concrete stair the safety treads, as shown in the Construction Drawings and specified.

PART 2. PRODUCTS

A. The edges of all concrete stair treads shall be protected with aluminum nosings having a non-slip abrasive surfacing and hatched surface treatment. The nosings shall be not less than 4-inches wide and shall be secured to the concrete by means of anchors cast into the masonry as shown in the Construction Drawings.

PART 3. EXECUTION

A. Contractor shall furnish and place at the concrete stair the safety treads, as shown in the Construction Drawings and specified.

SECTION 056010
STEEL TRASH RACK

PART 1. GENERAL

1.01 SUMMARY

1.01.1 SECTION INCLUDES

This section consists of furnishing all materials, labor, tools, plant and equipment necessary to install the steel trash rack including grooves as shown on Construction Drawings and as specified herein.

1.02 SUBMITTALS

1.02.1 SHOP DRAWINGS

A. Before fabrication on manufacture in the shop, the Contractor shall submit to the Engineer for approval, detail drawings in triplicate, showing all construction proposed.

PART 2. PRODUCTS

A. Steel trash rack shall be 2" x 1" cross bars welded to back of 1 ½" x ½" at 0.05 C.C. rack bars as shown on Construction Drawings. It shall be securely anchored into the masonry.

B. All metal work shall be true as to dimensions and free from defects before delivery to the job.

PART 3. EXECUTION

A. Contractor shall furnish all materials, labor, tools, plant and equipment necessary to install the steel trash rack including grooves as shown on Construction Drawings and as specified herein.

SECTION 071010
WATERPROOFING OF CONCRETE STRUCTURES BELOW GRADE

PART 1. GENERAL

1.01 SUMMARY

1.01.1 SECTION INCLUDES

This section includes the waterproofing of the exterior surfaces of all structures below final grade by one of the methods indicated below.

1.01.2 WARRANTY

A. The Contractor shall guarantee the performance of the waterproofing for a period of one year from date of final acceptance of the project.

PART 2. PRODUCTS AND EXECUTION

A. Contractor shall waterproof the exterior surfaces of all structures below final grade by one of the methods indicated below. Waterproofing shall be installed from the footing to a point 0.15 meters below final grade.

B. Method 1 - Asphaltic Coating: The Contractor may select an asphalt coating of suitable composition, applied in a sufficient number of coats and thickness to provide an impervious boundary against leakage from or entrance into the structure. The coating shall be applied in accordance with the manufacturer's recommendations.

Method 2 - Impervious Membrane: The Contractor may select an impervious membrane made of polyvinyl or polyethylene film with a minimum thickness of 12 mils to provide an impervious boundary against leakage from or entrance into the structure. The membrane shall be installed in accordance with the manufacturer recommendations.

SECTION 071220
EPOXY COATING FOR PIPES AND STRUCTURES

PART 1. GENERAL

1.01 SUMMARY

1.01.1 SECTION INCLUDES

This section consist of furnishing all material and labor required to provide and epoxy corrosion resistant coating to the interior of all pipes as specified herein, including tongue and grove joint surfaces and accessory structures for sanitary sewer trunk lines, except for ductile iron pipe used in sanitary sewers which is specified in Section 15C040 Ductile Iron Pipe.

1.02 SUBMITTALS

A. Samples. Prior to the application of the coating, the Contractor shall furnish a sample of the color and coating material selected by the applicator. The sample of the coating material shall be applied to concrete backing similar to that on which the coatings are to be applied and shall be approximately 8 inches by 16 inches in size; the approved samples shall serve as standard for the finishes and the Contractor shall provide the coating materials in accordance with the approved sample standards.

B. Certificates of Compliance. The Contractor shall furnish to the PRASA, a statement of compliance of all material furnished and labor performed under this section of the specifications, with all the specification requirements for the project.

PART 2. PRODUCTS AND EXECUTION

A. Contractor shall furnish all material and labor required to provide an epoxy corrosion resistant coating to the interior of all pipes as specified herein, including tongue and grove joint surfaces and accessory structures for sanitary sewer trunk lines.

B. Epoxy Corrosion Resistant Coating

1. Materials. All interior surfaces of pipes, manholes and appurtenances shall be coated with an epoxy corrosion resistant coating, except for ductile iron pipe used in sanitary sewers which is specified in Section 15C040 Ductile Iron Pipe. This coating shall be "Ceilgard 663G" chemical resistant coating by Ceilcote, Inc., or approved equal. This coating shall be capable to resist at least 60% concentration of sulfuric acid, as tested by ASTM D543 - 30 days immersion test. The coating shall be applied at all instances after pipe has been properly cured to attain the specified structural strength.

The protective coating minimum thickness shall be as follows unless otherwise called for different in plans:

a) 30 mils dry - All reinforced concrete ASTM C76 - AWWA C302, ductile iron and steel pipes, manholes and appurtenances, except at noted below for 40 mils dry.

b) 40 mils dry - All reinforced concrete drop manholes, including the first two (2) lengths (9.76m) of all pipe connecting to the DMH, and pump station wet pit.

The epoxy coating shall be furnished and applied on the interior surface of the pipes, in accordance with the printed recommendations of the manufacturer of the epoxy finish materials. Application shall be made by a firm authorized and approved by the manufacturer of the materials, to apply the epoxy coating conforming to his recommendations.

All materials for epoxy coating shall be stored, handled, mixed and applied in strict conformance with the printed recommendations of the manufacturer of the finish materials. Copies of the manufacturer's recommendations for the preparation of surfaces; storing, handling, mixing and application of the coating materials, retouching, recoating, repairing, and the curing and protection of the finished work, shall be furnished to the Engineer for his use, including any other information as required.

All materials shall be first quality and freshly compounded. The materials shall meet the physical requirements specified herein and shall produce a hard, protective coating possessing excellent qualities of durability, waterproof, adhesion, chemical resistance and resistance to impact and abrasion.

2. Preparation of Surface

The interior surface of the pipes shall be clean, dry, and free from oil, dust, curing compounds, grease or other foreign matter and loose material at time of coating for proper adhesion of the lining. Dry is a moisture content of 15% or less. Pipe surfaces shall be free from imperfections in the surface. Al imperfections in the surface such as holes and burns shall be satisfactorily repaired by the pipe manufacturer prior to the application of the materials. The Engineer shall check the environmental humidity and temperature to verify compliance with the coating materials manufacturer recommendations.

3. Application

a) The application of the epoxy coating shall be performed in strict conformance with the printed recommendations of the manufacturer of the coating materials and as approved. Interior surfaces of the pipes shall be kept at the required temperature and humidity before, during and after installation of the coating in accordance with the recommendations of the manufacturer of the material for the finishes. Coatings shall be applied to the thickness required.

The coating application shall consist of the following steps:

1) Surface Preparation: Sand blasting is recommended before applying the coating. Blast the pipe surface to a profile of fine to medium grade sandpaper. Blast all surfaces to be coated. Remove all sand and dust before coating. The acid Etching method can be used as an alternate to the Sand Blasting method or surface preparation at the option of the applicator. If this alternate method is selected the Contract shall supply the Engineer the necessary description of the method and materials for his approval prior to its use.

2) Finish Application: The required minimum thickness of the epoxy coating is specified above. The avoid pin-holding, apply three or more thin, 8 to 10 mil coats, rather than one thick coat. Subsequent coats may be applied as soon as the previous one is touch dry.

3) Recoating: In addition to the corrections made to the coating during its application, all defect detected after curing shall be corrected by the coating applicator upon request of the Engineer, the Contractor's representative or by own initiative of the coating applicator. To insure proper adhesion between coats, the maximum time between coats should be 36 hrs. at 77°F or 24 hrs. at 90°F.

b) Surface and Film Testing and Inspection: Surface temperature and pipe moisture content shall be determined by an appropriate method, to assure proper condition of the surface before applying coatings. The primer and finish coats shall be inspected for continuity, pinholes, bore areas and holidays.

The completed coating system shall be free of runs, sags and drips, cracks, crazing, alligatoring, blisters, inclusions, excessive or deficient film thickness, voids, pinholes, or other damaged areas or any other defects. Any such deficiencies shall be corrected. Depending upon air circulation and relative humidity conditions, the coating system should be cured sufficiently hard to handle without damage and shall be allowed to cure based on the surface temperature versus time schedule, all in accordance with the coating manufacturers recommendations. The applicator of the coating shall make available the information, for the use of the Authority and of the Contractor's representative of the gages and meter necessary for the complete inspection of the coating.

c) Touch-up and Repair: Runs, sags and drips, cracks, crazing, alligatoring, blisters and inclusions shall be completely repaired by suitable method recommended by the manufacturer. The applicator shall apply each coating at the rate specified by the Manufacturer. If material has thickened or must be diluted for application by spray gun, the coating shall be built up to the same thickness achieved by undiluted material. Deficiencies in field thickness shall be corrected by the application of an addition coat or coats of finish.

d) Pre-Cast or cast in place structures: Interior precast or cast-in-place concrete manhole surfaces shall receive a minimum dry film thickness as specified previously in above, including a primer and necessary finish coats. Brush, rollers or mechanical means shall be used for applying the coatings.

e) Mixing: Mix only the amount of material that can be used before the expiration of the pot life. Measure the components carefully and add Part B to Part A. Mix thoroughly, using a mechanical mixer. Carefully scrape the sides and bottom of the container while mixing. Proper mixing will take from three to five minutes, and the mixed material must contain no streaks or lumps.

f) Pot life: Nearly all mixed multi-component materials have a pot life, or time limit during which the mixed material can be used. The pot life will generally vary with temperature and is usually shorter at higher temperature ranges. Pot life limits must be strictly observed. Care should be taken not to mix more material than can be applied during the pot life. If the

pot life has been exceed, the material must be discarded, even though it may still look it is satisfactory to use. Pot life ends when coating loses body and begins to sag. Frequently a pot life of 1 hour at 75°F (24°C) and less at higher temperature is acceptable, however manufacturer's recommendations must be followed.

4. Curing and Recoating

a) Due to the complex mechanism of film formation, the application of coating required to comply with the printed time/temperature/humidity recommendations of the material's manufacturer related to the four (4) time phases of film curing. From the application standpoint, these four time phases to curing can be defined as follows:

1) To touch - The point at which the film losses its thickness and will no longer pick up on the finger when lightly touched. (Also called "tack-free" or "dust-free").

2) To handle - The point at which a freshly coated article can be picked up and handled without damage to the film.

3) To recoat - The point at which the film is sufficiently cured to receive the next coat without adverse affects.

4) Full Cure - The point at which the film initially reaches its full physical and chemical properties and is ready to be placed in service. (Sometimes referred to as "dryhard").

b) The coating time, normally takes these various phases in the curing cycle at the required temperature and humidity. No variations in temperature, humidity and air movement during the curing cycle shall be allowed to avoid variations of the actual length of time required for each of these phases; to determine when the coating is sufficiently cured to handle, to touch, to recoat or when it reaches full cure and is ready to be placed in service.

c) Where there is a doubt, the application of coating required to allow a safety time factor to be sure the film has reached the desired stage of cure.

SECTION 079212
JOINT SEALERS

PART 1. GENERAL

1.01 SUMMARY

1.01.1 SECTION INCLUDES

A. Provide sealant at:

1. Exterior joints.

2. Interior joints.

3. Interior wet areas.

4. Concealed joints.

5. Firesafing sealant.

6. Acoustic sealer interior.

1.02 REFERENCES

A. ANSI/ASTM D1056. Flexible Cellular Materials - Sponge or Expanded Rubber.

B. ANSI/ASTM D1565. Flexible Cellular Materials - Vinyl Chloride Polymers and Copolymers (Open-Cell Foam).

C. ASTM C790. Use of Latex Sealing Compounds.

D. ASTM C804. Use of Solvent-Release Type Sealant.

E. ASTM C834. Latex Sealing Compounds.

F. FS TT-C-00598. Calking Compound Oil and Resin Base Type.

G. FS TT-S-001657. Sealing Compound, Single Component, Butyl Rubber Based solvent Release Type.

H. FS TT-S-00227. Sealing Compound: Elastomeric Type, Multi-Component.

1.03 SUBMITTALS

A. Submit samples of each type and color of joint sealer required.

1.04 SEQUENCING AND SCHEDULING

A. Coordinate works under provisions of General Conditions Section.

B. Coordinate the work of this Section with all Sections referencing this Section.

1.05 WARRANTY

A. Provide three-year warranty.

B. Warranty: Include coverage of installed sealant and accessories which fail to achieve air tight and watertight seal exhibit loss of adhesion or cohesion or do not cure.

PART 2. PRODUCTS

2.01 MANUFACTURERS

A. Pecora Corporation.

B. Rexnord Chemical Products, Inc.

C. Or approved equal.

2.02 MATERIALS

A. Sealants (Colors to be Selected by Engineer).

1. Elastomeric Sealant: Provide manufacturer's standard chemically curing, elastomeric sealant of base polymer indicated, complying with ASTM C 920 requirements. 1. One-Part Mildew-Resistant Silicone Sealant: Type S; Grade NS; Class 25; Uses NT, G, A, and 0; intended for sealing interior joints with nonporous substrates exposed to moisture. 2. One-Part Nonsag Urethane Sealant: Type S; Grade NS; Class 25; Uses NT, M, A and 0.

2. Acrylic-Emulsion Sealant: Manufacturer's standard, one part, Nonsag, acrylic, mildew-resistant, acrylic-emulsion sealant complying with ASTM C 834.

3. Butyl-Polyisobutylene Sealant: Manufacturer's standard, solvent-release-curing, butyl-polyisobutylene sealant complying with AAMA 809.1, recommended for concealed joints.

4. Sponge Rubber Joint Filler: Preformed strips complying with ASTM D 1752 for Type I.

5. Fire-Resistant Joint Sealers: One of two part, foamed-in place, silicone sealant with fire-resistance rating identical to assemblies whose fire endurance has been tested per ASTM E 814 by Underwrites Laboratory, Inc., or other testing agency acceptable of authorities.

6. Sealant Backing: Non-staining; compatible with joint substrates, sealant, primers and other joint fillers; approved for applications indicated by sealant manufacturer base on field experience and laboratory testing.

7. Primer: Type as recommended by joint sealer manufacturer where required for adhesion of sealant to joint substrates indicated, as determined from pre construction joint sealer-substrate and field tests.

B. Compatibility. Provide joint sealers, joint fillers and other related materials that are compatible with one another and with joint substrates under service and application conditions, as demonstrated by testing and field experience.

2.03 ACCESSORIES

A. Primer. Non-staining type, recommended by sealant manufacturer to suit application.

B. Joint Cleaner. Non-corrosive and non-staining type, recommended by sealant manufacturer; compatible with joint forming materials.

C. Joint Backing. ANSI/ASTM D1056; round closed cell polyethylene foam rod; oversized 30 to 50 percent larger than joint width.

D. Bond Breaker. Pressure sensitive tape recommended by sealant manufacturer to suit application.

PART 3. EXECUTION

3.01 EXAMINATION

A. Verify that surfaces and joint openings are ready to receive work and field measurements are as shown on Construction Drawings and recommended by the manufacturer.

B. Beginning of installation means installer accepts existing substrate.

3.02 PREPARATION

A. Clean and prime joints in accordance with manufacturer's instructions.

B. Remove loose materials and foreign matter, which might impair adhesion of sealant.

C. Verify that joint backing and release tapes are compatible with sealant.

D. Perform preparation in accordance with ASTM C804 for solvent release and ASTM C790 for latex base sealant.

E. Protect elements surrounding the work of this Section from damage or disfiguration.

3.03 INSTALLATION

A. Install sealant in accordance with manufacturer's instructions.

B. Measure joint dimensions and size materials to achieve required width/depth ratios.

C. Install joint backing to achieve a neck dimension no greater than 1/3 the joint width.

D. Install bond breaker where joint backing is not used.

E. Apply sealant within recommended application temperature ranges. Consult manufacturer when sealant cannot be applied within these temperature ranges.

F. Install sealant free of air pockets, foreign embedded matter ridges and sags.

G. Tool joints concave.

3.04 REPAIR/RESTORATION

A. Repair or replace defaced or disfigured finishes caused by work of this Section.

3.05 CLEANING

A. Clean work under provisions of General Conditions Section.

B. Clean adjacent soiled surfaces.

3.06 PROTECTION

A. Protect finished installation.

B. Protect sealant until cured.

3.07 SCHEDULE

A. Non-Sag Low-Modulus Urethane Sealant. All exterior joints, except as otherwise noted.

B. Acrylic-Emulsion Sealant. All interior joints except as otherwise note.

C. One-Part Mildew-Resistant Sanitary Silicone Sealant. Interior joints in "wet" areas and around plumbing fixtures.

D. Butyl-Polyisobutylene Sealant. Concealed joints requiring a non-curing sealant, such as lapped joints in metal flashing.

E. Fire Saving Sealant. Through-penetration fire-stop system for filling openings around cables, conduit, pipes and similar penetrations through walls and floors.

F. Colors. Provide color of exposed joint sealers as selected by Engineerr from manufacturer's standard colors.

SECTION 085105
WINDOWS

PART 1. GENERAL

1.01 SUMMARY

1.01.1 SECTION INCLUDES

This section includes furnishing and installation of Windows indicated in the Construction Drawings, including Aluminum Windows, Aluminum framed Plexiglas Windows, Aluminum jalousies Windows, Aluminum inverted type Y Windows, Aluminum Awning Windows, Skylights, Glazings and Glass Blocks.

1.01.2 RELATED SECTIONS

A. Review installation procedures under other Sections and coordinate the installation of items that must be installed prior to the Work specified herein.

1.02 REFERENCES

A. Comply with applicable provisions and recommendations of the following except as otherwise shown or specified.

1. **AAMA 804.1**: Architectural Aluminum Manufacturers Association
2. **ANSI Z97.1**: Performance Specifications and Methods of Test for Safety Glazing Material Used in Buildings.
3. **ASTM D1667**: Sponge Made from Closed-Cell Polyvinylchloride, or Copolymers Thereof.
4. Consumer Product Safety Commission, Part 1201, Safety Standard for Architectural Glazing Materials.
5. **FS-DD-G-451d**: Glass, Plate, Sheet, Figured (Float, Flat, For Glazing, Corrugated, Mirror and Other Uses).
6. **FS-DD-G-14038:** Glass, Plate (Float), Sheet, Figured, and Spandrel (Heat Strengthened and Fully Tempered).
7. **FS-TT-S-00227E (3)**: Sealing Compound, Elastomeric Type, and Multi Component (For Caulking, Sealing, and Glazing in Buildings and Other Types of Construction).
8. **FS-TT-S-001543:** Sealing Compound: Silicone Rubber Base (For Caulking, Sealing, and Glazing in Buildings and Other Structures).
9. Flat Glass Marketing Association (FGMA), Glazing Manual.
10. **U.L**.: Building Materials Directory.

1.03 SUBMITTALS

1.03.1 SHOP DRAWINGS AND SAMPLES

A. Contractor shall submitt shop drawings of all windows, mullion, skylights, glazing and similar items for approval before installation .

B. Standard details for installation shall be furnished to Engineer for approval. These details shall follow manufacturer's instruction and shall include the size of fasteners into load bearing material, and maximum clearance between window frame and rough opening. Show all assembly and erection of the entire system, showing all dimensions, gages, finishes, location of joints, connections, fasteners, expansion provisions, and locations and types of glazing gaskets, pressure plates and snap covers and other related items as required. Provide elevations at 1/4 inch scale, and full size detail sections of every member. Coordinate the submittal of Shop Drawings for component parts (as specified in other Sections) with this submittal. Show anchorages and alignments not shown on Shop Drawings of the components.

C. Skylights. For skylights indicate clearly structural calculations required to show compliance with dead load, live load, wind pressure loading requirements, deflection requirements, and movements in the Work required by the Puerto Rico Building Code. Contractor assumes full responsibility for this Work.

D. Copies of manufacturer's specifications, and installation instructions for each type sealant or compound, gasket and associated miscellaneous material required. Include manufacturer's published data, or letter of certification, or certified test laboratory report indicating that each material complies with the requirements and is intended generally for the applications shown.

1.03.2 SAMPLES

A. The contractor shall submit to the engineer for approval the following samples:

1. A sample of all windows, mullion, skylights, glazing and similar items for approval before installation

2. Metal frames – 1'0"x 1'0"corner.

3. Samples of standard anodic finishes for Aluminum entrances and other locations on .3 meter long sections of extrusion shapes. Where color or texture of finish will vary slightly for the Work, include 2 or more sections in each sample, to show the limits of such variations. Samples will be reviewed by Engineer for color and texture only. Compliance with other requirements is the exclusive responsibility of Contractor.

B. 0.30 meter square samples of each type of glass required and a sample of glass block. Engineer's review of samples will be for color, texture and pattern only. Compliance with other requirements is the exclusive responsibility of the Contractor.

C. Submit 0.30-meter long samples of each color for each type of glazing sealant or gasket exposed to view. Engineer will review samples for color and texture only. Compliance with other requirements is the exclusive responsibility of the Contractor.

1.03.3 QUALITY ASSURANCE / CONTROL SUBMITTALS

A. Test Reports. Submit for approval the following:

1. Certified laboratory test reports for specified performance tests.

2. For structural silicone joinery:

a. Test data on adhesion to samples of metal and glass, tested in accordance with ASTM C794.

b. Compatibility statement that the, material in contact with the sealant (such as gaskets, spacers, setting blocks), are compatible with the sealant after 21 days exposure to ultraviolet, 2000-4000 (micro watt ultraviolet radiation).

B. Certification that all glazing materials subject to the applicable standards of the Consumer Product Safety Council, Safety Standard for Architectural Glazing Material are in compliance. The certification must be issued in conformance to procedures stated in the standard

1.04 QUALITY ASSURANCE

1.04.1 DESIGN CRITERIA

A. For glass size, type and thickness comply with the following:

1. Consumer Product Safety Commission, Part 1201, Safety Standards for Architectural Glazing Materials.

2. Glass manufacturer's recommended load tables.

B. Standards. Comply with applicable standards and recommendations by NAAMM, Metal Curtain Wall Specifications Manual, except to the extent more stringent requirements are specified.

C. Skylights

1. Modifications for Skylight. The skylight requirements shown and specified are intended to establish basic dimensions of units or modules, and profiles and sight lines of members. Within these limitations Contractor shall be responsible for the design and installation of the entire skylight system including glazing and sealants, and to make whatever modifications of, and additions to the details as may be required to fulfill the performance requirements. Maintain the visual design concept as shown, including member width, profiles and alignment of components. Select member depth required to satisfy performance criteria.

2. Provide skylight and accessories that comply with the following minimum performance characteristics, as proven by appropriate and recognized laboratory test methods acceptable to Engineer.

3. Wind Pressure Load: Components shall withstand wind pressure load, live and other loads required by the Puerto Rico Builidng Code.

4. Maximum deflection of glazing members L/175 of single span when subjected to wind and live loads with no deformation or damage when the loads are removed. Provide concealed stiffeners as required to prevent greater deflection than specified. Submit deeper mullions for approval only if concealed stiffeners are not adequate.

5. Water Penetration, ASTM E331: No evidence of uncontrolled water penetration to the interior of the building through the Work when subjected to a test pressure of 4 pounds per square foot.

6. Air Infiltration, ASTM E283: Maximum air infiltration of 0.06 cubic feet per minute per square foot of skylight area.

7. Provide skylight to withstand thermal expansion and contraction movements resulting from not less than an ambient temperature range of 40 F. Limit the deflection as for wind pressure loading. Thermal movements shall not cause permanent deformation, cracking, opening of joints, undue stress on fasteners, or other effects detrimental to weathering performance.

D. Provide internal drainage to lead all infiltrated water to the exterior through weep slots.

1.04.2 QUALIFICATIONS

A. Installer Qualifications. The installer of the glass and glazing materials shall be a firm with documented experience in the Work specified herein.

B. Manufacturer Qualifications

1. The manufacturer of the glass and glazing materials shall be a firm with documented experience in manufacturing glass specified herein.

2. Obtain glazing materials from manufacturers who will, if required, send a qualified technical representative to project site, for the purpose of advising the installer of proper procedures and precautions for the use of the materials.

1.04.3 REGULATORY REQUIREMENTS

A. Requirements of Regulatory Agencies. Comply in all work with the Puerto Rico Building Code, latest version.

1.05 DELIVERY, STORAGE AND HANDLING

1.05.1 PACKING, SHIPPING, HANDLING AND UNLOADING

A. Deliver products cartoned or crated to provide protection during transit and job storage.

B. Deliver glass with manufacturer's labels intact. Do not remove labels until glass has been installed. Keep glass free from contamination by materials capable of staining glass. Deliver glazing compounds and sealant in manufacturer's unopened, labeled containers.

C. Protect glass from edge damage at all times during handling, installation and operation of the building.

D. Inspect products upon delivery for damage. Minor damage may be repaired provided the finish items are equal in all respects to new Work and acceptable to Engineer; otherwise, remove and replace damaged items.

1.06 PROJECT/SITE CONDITIONS

1.06.1 ENVIRONMENTAL REQUIREMENTS

A. Do not proceed with installation of liquid glazing sealant under adverse weather conditions, or when temperatures are below or above manufacturer's recommended limitations for installation. Proceed with glazing only when forecasted weather conditions are favorable to proper cure and development of high early bond strength. Wherever channel action is affected by ambient temperature variations, install glazing sealant only when temperatures are in the middle third of manufacturer's recommended installation temperature range. So that sealant will not be subjected to excessive elongation or compression, and bond stress will not be excessive at extremely low or high temperatures. Coordinate time schedule to avoid delay of project.

PART 2. PRODUCTS

A. Contractor shall provide all windows and other related products specified indicated in the Construction Drawings.

B. All windows shall comply with the applicable requirements of the latest version of the Puerto Rico Building Code at the date of the bid. Special attention shall be placed to Building Code structural requirements for positive and negative loads. The window shall allow no water infiltration when subjected to water and loads specified in the Building Code. Requirements and the maximum air infiltration shall be no more than 0.75 c.f.m. per foot of crack length.

C. Provide manufacturer’s standard units, modified as necessary to comply with the requirements as specified herein. Custom fabricate units wherever necessary for size, type and profile, using manufacturer’s standard detailing to the extent applicable.

D. Shop fabricate each unit complete with framing, gaskets, and flashings, hardware accessories, anchorage provisions and other components. Disassemble only to the extent required for delivery and installation.

2.02 MATERIALS

A. All material for window construction shall be of uniform in texture and finish, free from defect impairing strength durability or appearance, and of the best commercial quality for the purpose specified.

B. Jalousies. Shall consist of prefabricated or preformed members, or rolled and/or extruded aluminum shapes.

C. Window members (head, sill, jambs, travel bar and louver blades). Shall be of 6063 TS extruded aluminum, or acceptable commercial equivalents with a minimum tensile strength of 26,000 psi and a minimum thickness of 0.062 inches, except where the rivets anchor into the jambs, where the thickness shall be not less than 0.093 inches.

D. Operator. Shall be a specially designed Zamack #5 diecast operator as manufactured by Anderson Hardware, or approved equal, which has a fully enclosed worm and gear mechanism so design as to hold the slats fixed in any desired position, without undue flutter, and securely fixed in closed position.

E. Frame members. Shall be properly and securely riveted, bolted, or welded together. Clips, bolts, and screws shall be of a hard, corrosion resistant, high tensile strength aluminum alloy; or other non-ferrous metal suitable for use with aluminum windows.

F. Paint enamel. Shall be a first class, high quality, synthetic enamel for exterior use. Color shall be as selected by the Engineer.

G. Aluminum Inverted "Y" Type windows. Shall be furnished in the required sizes shown in the Construction Drawings.

H. Inverted "Y" Type Blades shall consist of prefabricated or preformed members, of rolled and/or extruded aluminum shapes. All window members including head, sill, jamb, travel bar and louver blades shall be of extruded aluminum or acceptable commercial equivalents. Frame members shall be properly and securely riveted, bolted, or welded together. Clips, bolts, and screws shall be of a hard corrosion resistance, high tensile strength aluminum alloy; or other non-ferrous metal suitable for use with aluminum window. The engineer reserves the right to inspect materials at the factory before such materials are used in the fabrication of the inverted "Y" type blades.

I. Each unit shall be properly formed and assembled at the shop to the required dimensions so as to fit the corresponding opening. The frame selection shall have to screws in each corner of the frame members. The jamb section shall have a triple reinforcing section on its entire length. Provide aluminum mullions and or sills and stools as required by the Construction Drawings.

J. Skylights. Align glazing surfaces with planes of glazing material within two degrees. Use stainless steel. fasteners exclusively.

1. Framing, Curbs, Glazing Caps, Clip Angles: Extruded Aluminum, 6063-T6 and 6063-T5 alloy, size and thickness to meet loading and spans shown or specified. Glazing caps shall be low profile. Gasket Materials: Provide specified manufacturer's standard recommended highest quality glazing system and recommended structural silicone glazing system which provides for thermal and structural movement as necessary in the Work. Extruded gaskets for the skylight located above the glazing panels shall be continuous Type I silicone rubber with continuous wet silicone glazing strip. Setting blocks shall be Type II silicone rubber sealant and accessories shall be charcoal gray color.

2. Flashing and Trim: 16 gage, 5005-HI54 alloy aluminum, gray anodized finish to match color of framing

3. Fasteners: Non-magnetic Type 316 stainless steel, except as otherwise shown or specified

4. Expansion Joints: Manufacturer's standard interior and exterior expansion joints.

K. Plexiglass glazing. Plexiglass glazing shall be used where indicated in the Construction Drawings.

1. Glazing shall be acrylic plastic sheet as manufactured by Rohm and Hass or approved equal. Plexiglas 1/4 inch thick, number 2538, neutral gray color, transmittance 16 % visible light and 27 % solar energy. Top panels shall be backed by an aluminum sheet .024" thick of the same color as the aluminum members. Glaze with tape above and below glazing material. Gun additional bead of sealant around edge of upper surface of each light in accordance with approved Shop Drawings. Seal all metal joints prior to and after glazing

L. Glass.

1. Glass for fixed and ventilating sections of projected windows shall be reflective glass for the outside and tempered glass for the inside.

2. Glass for fixed glass panels shall be as shown in the Construction Drawings.

3. To the greatest extent possible, provide all glass and glazing materials from one manufacturer.

M. Tempered Glass

1. Plate-glass, ANSI, Z97.1, FS-DD-G14503B, Type I, Quality q3 which has been heat -strengthened by manufacturer's standard process to achieve a flexural strength of 1-1/2 times normal glass strength; Class 1; 1/8-inch thick, except as otherwise shown or specified. Glass shall be clear.

2. Reflective Glass

a) Reflective, ¼" thick, shading coefficient 123, U factor 0.88.

N. Sealant and tapes

1. Colors: Provide black or other natural color wherever no other color is available. Wherever material is not exposed to view, provide manufacturer's standard color which has the best overall performance characteristics for the application shown.

a) Provide manufacturer's standard colors as shown or, if not shown, provide color selected by Engineer from manufacturer's standard colors to blend with adjoining surfaces.

2. Sealant to be used for exterior shall be One-Part Silicone Rubber Sealant. It shall be silicone rubber-based, one-part electrometric sealant, complying with the following:

a) FS TT-S-001543, Type 2 (non-sag) Class A.

b) Provide acid-type wherever both joint faces are metal, glass, plastic or other non-porous material.

c) Dynamic Movement Capability, FS TTS-001543: ±50 percent. 4.

O. Vinyl Foam Glazing Tape: Closed cell, flexible, self-adhesive, non-extruding, polyvinyl chloride foam tape; recommended by manufacturer for exterior, exposed, watertight installation of glass, with only nominal pressure in the glazing channel; comply with ASTM D1667.

P. Miscellaneous glazing materials

1. **Setting Blocks**. Neoprene, 70-90 durometer hardness, with proven compatibility with sealant used as recommended by the glass manufacturer.

2. **Spacers.** Neoprene, 40-50 durometer hardness, with proven compatibility with sealant used as recommended by the glass manufacturer.

3. **Cleaners, Primers and Sealers**. Type recommended by sealant, gasket and glass manufacturer.

Q. Glass block. Glass block shall be partially evacuated, hollow masonry units made of clear, colorless glass (with or without a highly reflective oxide surface coating). The units shall be the VVE pattern, 1 - 0" x 1 -0" x 3 4/8" in thickness.

R. Aluminum Awning Windows. Aluminum awnings windows shall be aluminum, Series 425 projected as detailed in AL-VENT, Inc. Catalog or approved equal.

1. **Glass.** Glass for awning windows shall be bronze acrylic panels 1/4" thick.

2. **Glazing.** Windows shall be glazed from the inside using snap-in extruded glazing beads and bedding compound approved equal to DAP 1231, FLEXIGLAZE.

2.02.2 MANUFACTURES

A. Windows shall be manufacturer by Sosa Architectural Metal Corp. (SAMCOR) of Rio Piedras, Puerto Rico, MARVA of Caguas or approved equal. They shall meet or exceed the latest requirement of the architectural aluminum manufacturer association and the American Society for Testing Materials. In case of conflict between the referenced standards the one having the more stringent requirements shall govern.

B. Skylights shall be manufactured by one of the following: Regal Manufacturing Company, Division of Arcorp, or approved equal .

C. Provide glass block by Pittsburgh Corning Corporation, or approved equal.

D. Provide fixes glass by Pittsburgh Plate Glass Co., or approved equal.

E. Tempered Glass Product and Manufacturer: Provide one of the following:

1. Herculite as manufactured by PPG Industries, Incorporated.

2. Tuf-Flex as manufactured by Libbey-Owens-Ford Company.

3. Or approved equal.

F. Reflective Glass Product and Manufacturer: Provide one of the following:

1. Solarban 560-8(2), by P.P.G. Industries.

2. Or approved equal.

G. Exterior sealant shall be silicone Rubber Sealant manufactured by one of the following:

1. Spectrem 2 as manufactured by Tremco.

2. 862 Architectural Silicone Sealant as manufactured by Pecora Corporation.

3. Or approved equal.

2.02.3 HARDWARE

A. Louvers lever. Shall be designed to securely hold the louver blade to the louver lever without added fastening devices.

Shall be formed with a top private curved section which will form a continuous cover at the protruding part in order to provide a continuous physical hinged ventilators outward.

The operator shall be the manufacturers standard torque bar operator with internal drive gear, plated worm gear, torque bushing, and "T" handle.

B. Weather-stripping. Shall be of vinyl material compatible with aluminum, which will not promote corrosion and shall be resistant to deterioration by all forms of weather.

C. Surface Finish

1. All aluminum surfaces shall be treated chemically in order to prepare the metal for painting.

All aluminum exposed parts, frame members, louvers lever, louvers, operators, etc, shall have a baked enamel finish, or a clear anodized finish equal to AA-M12C22AZ1 color will be selected by the engineer form the manufacturer's standard color charts.

2.03 FABRICATION

2.03.1 SHOP ASSEMBLY

A. Jalousie windows. Each unit shall be properly formed and assembled at the shop to the required dimensions so as to fit the corresponding masonry opening. The frame section shall have, at least, two screws in each corner of all frame members. The travel bars, louvers, and jambs shall be securely riveted by aluminum shoulder rivets. The jamb section shall have a triple reinforcing section on its entire length. The head and sill shall be mounted flush with the lambs on the inside to permit insert on left or right side as may be required by job conditions, and units over 5"-0" high

shall have two (2) operators per unit. Provide aluminum mullions and/or sills and stools as required by the Construction Drawings.

B. Skylights. Except as otherwise specified, fabricate skylight Work by specified manufacturer's standard processes and written recommendations, with details as published and approved Shop Drawings, complying with the Specifications and Construction Drawings.

1. Expansion. Fabricate units to withstand the movements and stresses of thermal expansion for a minimum ± 40 F variation and building structural movements.

2. Condensation. Fabricate units to effectively collect condensation from lights, and to drain to exterior in a manner which will eliminate interior dripping and the migration of condensate into the building construction

3. Construction. Provide mitered and welded corner construction with welds dressed smooth, or provide manufacturer's standard proprietary jointing system which is secure, tight, concealed and watertight (where exposed to exterior). Comply with AWS recommendations to minimize discoloration of aluminum at welds.

4. Flashing. Fabricate units with integral counter flashing to effectively weatherproof the perimeter of the units at the juncture with other construction.

5. Finish. After completion of metal fabrication including welding, apply the following shop finish, to all exterior and interior surfaces:

a) Charcoal Gray Anodized.

2.04 SOURCE QUALITY CONTROL

2.04.1 TEST, INSPECTION

A. The engineer reserves the right to inspect materials at the factory before such materials are used in the fabrication of the jalousies.

PART 3. EXECUTION

A. Contractor shall furnish all labor, materials, products, finish hardware, anchors, accessories, equipment, tools and others required for the installation of all windows including skylights, glazing and glass blocks indicated in the Construction Drawings.

B. Coordination and work specified elsewhere. The contractor shall coordinate the work specified in this section with that in other sections of this specification in order that all necessary items shall be provided as required for satisfactory operation and that the various items of equipment will properly fit and operate in the spaces allotted to them.

The following work is specified elsewhere:

1. Concrete work

2. Masonry work

3. Finishes

3.02 PREPARATION

A. The contractor shall securely anchor the windows in place to a straight plumb and lever condition without distortion of the windows in accordance with the installation details furnished, and shall make final adjustment for proper operation of the ventilating units. All anchoring devices used in the erection of windows shall be or aluminum or stainless.

B. Windows shall be assembled in a secure and workmanlike manner to assure neat and weather-tight construction. A permanent watertight joint shall be made at the junction of the sill and side frames members. The sill section shall have a water dam leg with a height of 1½"minumum.

C. Jalusie and Louvered Windows.

1. The louver lever shall be attached to the jamb section by flush rivets with straight shanks.

2. The operator shall transmit its power to both sides of the operable gash by means of a torsion bar connected to an arm and link located on each jamb which will operate both sides of the operable sash simultaneously.

D. Caulking. All joints between the entrance frame members and adjacent masonry or other materials shall be properly caulked (inside and outside) in accordance with manufacturer's instruction. Caulking shall be equal or similar to Dap "230" sealant and meet or exceed performance requirements TT – S – 02230C, Type 11 class B ASTM C834.

Joints between frames and wall shall be properly caulked on all four sides with an aluminum base, elastic caulking compound equal or similar to "Alumilastic" of Pars Pint and Color Co., Cleveland, Ohio.

Where shown in the Construction Drawings windows, window walls and fixed frames shall be caulked using Pecora Unacrilic caulking compound or approved equal.

E. Surface preparation and shop painting is required for all ferrous metals, equipment and accessories, and shall be as specified in Section titled "Painting".

Before installation, all surfaces of frames facing, or in contact with masonry shall be painted with a heavy coat of approved asphalt paint.

F. Dissimilar Metals. The contractor shall take every precaution to prevent the occurrence o electrolytic action between dissimilar metals on all work. Copper products shall not be used in connection with aluminum work, nor shall aluminum be used in locations subject to drainage of copper compounds on the bare aluminum. Surface of steel in contact with aluminum shall be painted with one coat of zinc – chromate primer and one coat of aluminum- pigmented bituminous paint. Aluminum in contact with masonry or concrete shall be back painted with two coats of aluminum pigmented bituminous paint.

G. Comply with combined recommendations of glass window and sealant manufacturer and other materials used in glazing, except where more stringent requirements are shown or specified, and except where manufacturer's technical representatives direct otherwise.

H. Comply with Flat Glass Marketing Association, Glazing Manual, except as shown and specified otherwise, and except as specifically recommended otherwise by the manufacturers of the glass and glazing materials.

I. Do not attempt to cut, seam, nip or abrade glass on site, which is tempered, heat strengthened, or coated.

J. Preparation for glazing

1. Clean the glazing channel, or other framing members to receive glass, immediately before glazing. Remove coatings, which are not firmly bonded to the substrate. Remove lacquer from metal surfaces wherever electrometric sealants are used.

2. Apply primer or sealer to joint surfaces wherever recommended by sealant and glass manufacturer.

3.03 INSTALLATION

A. Windows. Windows shall be erected plumb and true and level and shall be firmly anchored in place to masonry at heads and jambs by 1/4" diameter. expansion bolts (wood plugs and wood screws will not be accepted) or any other approved method. Bolts shall be of sufficient length to penetrate into the masonry a minimum of 1-1/2". Bolts for fastening frames to masonry shall be placed not over 11-6" center to center, but never less than 2 bolts, at head or jamb. Frames shall be fastened to mullions with 1/4' diameter bolts spaced not over 11-6" center to center.

B. Windows shall be set level, plumb and square in pre-finished openings. Caulk between windows and surrounding construction to provide a weather tight installation. Adjust all ventilators after glazing to obtain proper operation. Erection must be done by qualified personnel approved by manufactured.

C. All windows, skylights, glazing and glass blocks, others shall be installed as recommended by the manufacturer to conform to the particular applications involved in accordance with the details shown in the Construction Drawings. Installation of equipment and connections shall be completed in every detail in a workmanlike manner. All bearings shall be properly lubricated. Necessary supports for all equipment shall be provided as required. Shop drawings for supports shall be submitted.

D. After assembly each unit shall be cleaned free form dust and grease and shall receive a spray coat of zinc chromate primer suitable as a base for application of finish coats. Inspect each piece of glass immediately before installation, and eliminate any, which have observable edge damage or face imperfections.

E. Paint.

1. Surface contact between aluminum components and dissimilar materials shall receive a protective coating or neutral, non-absorptive isolator to prevent electrolysis and corrosion.

2. Jalousies and Inverted Y type blades shall be furnished with two coats of baked enamel paint, factory applied.

3. Enamel shall be a first class, high quality, synthetic enamel for exterior use. Color shall be as selected by the Engineer.

4. Aluminum awning windows, mullions, subframes and accessory trim shall have bake enamel paint. Color shall be as selected by Engineer.

F. Installation Fittings. All standard mullion or window installation clip anchors shall be aluminum. Attachment screws or bolts necessary to fasten clips to window or mullions shall be included.

G. Anchor enclosures permanently to the substrate, by methods approved in the Shop Drawings adequate for the sizes and locations of the units.

H. Seal all joints to provide a permanently watertight closure.

I. Install interior and exterior surface mounted expansion joints.

J. Glazing.

1. The types of glass and glazing required include the following: glazing exterior windows, glazing interior hollow metal window frames, glazing exterior doors, glazing vision panels in exterior and interior doors, glass block.

2. Watertight and airtight installation of each piece of glass is required. Each installation must withstand normal temperature changes, wind loading, impact loading without failure of any kind including loss or breakage of glass, failure of sealant or gaskets to remain watertight and air-tight, deterioration of glazing materials and other defects in the Work.

3. Glass manufacturer's recommended glazing channel dimensions are intended to provide for necessary minimum bite on the glass, minimum edge clearance and adequate sealant thickness, with reasonable tolerances. Contractor is responsible for correct glass size for each opening, within the tolerances and necessary dimensions established.

4. General Installation of Glass Block. Sill area to be covered by mortar shall have a heavy coat of Asphalt Emulsion. Allow emulsion to dry before placing mortar.

K. Tape and Sealant Glazing

1. Cut glazing tape to length and set against permanent stops. Install horizontal strips first, extending over width of opening, before applying vertical strips. Place setting blocks at quarter points. Remove paper backing from tape. Position glass on setting blocks and press against tape for full contact.

2. Place glazing tape on free perimeter of glass. Seal butt Joints of tape with joint sealant.

3. Install removable stop, avoiding displacement of tape, and exert pressure on tape for full continuous contact. Calk space above glazing tape to top of glazing stop. Tool exposed surfaces of calking compounds to provide a substantial "wash" away from the glass. Clean and trim excess glazing materials from the installation, and eliminate stains and discoloration.

3.04 FIELD QUALITY CONTROL

A. Test for water leaks in exterior joints exposed to weather after the sealant is cured for the amount of time specified by manufacturer of the sealnt. Flood the joint exposure with water directed from a 3/4-inch garden hose, without nozzle, held perpendicular to wall face, 2 feet-0 inch from joint and connected to a water system with 30 pounds per square inch minimum normal water pressure. Move stream of water along joint at an approximate rate of 20 feet per minute.

B. Test 100 percent of total joint system. Conduct test in the presence of Engineer.

3.05 ADJUSTMENT AND CLEANING

A. Prior to final inspection and acceptance:

1. Remove and replace all imperfectly set, cracked or broken glass regardless of how or by whom glass is cracked or broken. Remove all dirt, stains, etc. and clean and polish.

B. Cure glazing sealants and compounds in compliance with manufacturer's instructions and recommendations, to obtain high early bond strength, internal cohesive strength and surface durability.

C. Contractor shall protect glass and glazing sealants and compounds during the construction period, so that they will be without deterioration or damage, other than normal weathering, at the time of Authority's acceptance.

D. Contractor shall follow instructions on the precautions and provisions required to prevent glass damage resulting from the alkaline wash from concrete surfaces and similar sources of possible damage.

E. Remove and replace glass which is broken, chipped, cracked, abraded or damaged in other ways during the construction period, including natural causes, accidents and vandalism.

F. Maintain glass in a reasonably clean condition during construction, so that it will not be damaged by corrosive action and will not contribute (by wash-off) to the deterioration of glazing materials and other work.

G. Wash and polish glass on both faces not more than 4 days prior to Authority's acceptance of the work in each area. Comply with glass manufacturer's recommendations.

H. Cleaning Glass Block. Surplus mortar shall be removed and the faces of the blocks wiped dry at the time joints are tooled. Cleaning is facilitated by the use of an ordinary household scrub brush having

stiff bristles. Final cleaning shall be done after mortar has attained final set but before becoming dry on the block surfaces. Do not use abrasive cleaners (steel wool, wire brush) in conjunction with removing mortar or dirt from the faces of glass block. Remove mortar with damp cloth before final set occurs.

SECTION 092210
CEMENT PLASTERING

PART 1. GENERAL

1.01 SUMMARY

1.01.1 SECTION INCLUDES

This section includes furnishing all labor, materials and equipment necessary to execute all plastering work.

1.01.2 RELATED SECTION

A. Section 033100 - "Cast in place Concrete"

PART 2. PRODUCTS

2.01 MATERIALS

A. Plaster. Shall consist of Portland cement, lime, sand and water mixed in the proportions specified hereafter.

B. Portland Cement. Shall be as specified under Section 033100 - "Cast in place Concrete".

C. Sand. Shall be as specified under Section 033100 - "Cast in place Concrete", except that 100 per cent shall pass through a 1/16-inch mesh sieve.

D. Lime. Shall be hydrated lime conforming to the Standard Specifications of the ASTM, Serial Designation: C141, latest edition.

E. Water. Shall be fresh, clean and free from alkali or organic matter.

PART 3. EXECUTION

3.01 CONSTRUCTION AND INSTALLATION

A. The Contractor shall furnish all labor, materials and equipment necessary to execute all plastering work. Unless otherwise shown on the plans, all exposed interior and exterior concrete and surfaces, except roofs and floors, will receive cement plaster finish as indicated herein.

B. Before applying the plaster coat, surfaces shall be thoroughly cleaned and washed to remove all dirt, loose particles and foreign matter. Just before applying the plaster, they shall be wetted to secure a firm and permanent bond.

C. Cement plaster be applied in a single coat having a minimum thickness of 3/8-in. rodded to a true smooth surface and floated to an even sand finish. Where it shall be necessary to increase the thickness of the plastering coat more than 3/8 in. to bring the wall surface to a true and plumb plane,

the plastering shall be applied in two coats. The first coat properly scratched to provide bond for the application of the second coat.

D. The retempering of the mortar will not be permitted under any circumstances and only the amount of mortar that can be used within an hour after the application of the water shall be mixed at one time.

E. Mortar for plastering all concrete surface shall be mixed in the proportion of one (1) part of cement, three (3) parts of sand and one tenth (1/10) of one part of hydrated lime, by weight and sufficient water to obtain a workable mix and shall be conform with Section 033100 - “Cast in place Concrete”.

SECTION 092215
CEMENT FINISHES

PART 1. GENERAL

1.01 SUMMARY

1.01.1 SECTION INCLUDES

This section includes furnishing all labor, materials, equipment, tools, accessories and other required for the application of the finishes indicated in the Construction Drawings, specified herein and/or required by the Engineer to complete the specified work.

PART 2. PRODUCTS

A. Cement Finishes: For all concrete top surfaces in floor and roof slabs, corridors, walks, walls, steps, and stairs, etc., as shown in the Construction Drawings or specified herein.

1. Materials:

a) Cement: Shall be of the best quality Portland Cement conforming to ASTM C150.

b) Sand: Shall conform to ASTM standard specification C144.

c) Lime: Shall be hydraulic hydrated lime conforming to ASTM standard specification C141.

d) Coarse Aggregate: Shall consist of crushed stone, gravel, blast furnace or other approved inert materials conforming to ASTM standard specification C33.

e) Water: Shall be clear, fresh and free form acids, oils, alkalis, or organic matter.

2. Special Additives for Concrete of Plaster:

a) Non-slip aggregate

b) Waterproofing

c) Concrete Surfaces Retarding Compound. The compound shall retard the surfaces setting of concrete, but shall not affect the setting of concrete below a depth of 3.2 mm. It shall not contain any ingredients that will injure or stain plaster when applied to the roughened concrete.

d) Hardener: Shall be an approve chemical compound. Hardener shall be delivered at the site in its original containers, bearing the manufacturer's label, and instruction for its use.

PART 3. EXECUTION

A. Contractor shall furnish all labor, materials, equipment, tools, accessories, and others required for the application of the finishes indicated in the Construction Drawings, specified herein and/or required by Engineer to complete the specified work.

B. Application of Finishes

1. **Integral Cement Finishes.** Shall be composed of a mixture of one part cement, one part medium coarse sand, and one half parts coarse aggregate, graded from 1/8" to ¼"to which floor hardener shall be mixed following the manufacturer's instructions as to quantity and method. Water rater for the mix shall be limited to five gallons per sack of cement. The integral cement finishing coat shall not be less than ½" thick and shall be laid over the concrete slab surface while it is still green, and screened to a true, even surface, trowel to smooth finish, and after having set sufficiently to ring under the trowel shall be given a second trowelling and burnishing. Allow from 30 to 40 minutes for surface water to drain or evaporate before starting the finishing operation.

2. **Waterproof Cement Finish for Floors.** Shall be made by mixing in sizes from 1/8"to ½". To these materials, the amount of waterproofing compound recommended by the manufacturer and enough water should be added to form a mixture of the proper consistency. Not more than five gallons of water shall be added per sack of cement.

   a) The thickness shall not be less than ½". The application shall be done over all slabs, while the concrete is still in its initial setting process, and the surface water has disappeared. The mortar coat shall be place over the slabs. Troweling it to a smooth and uniform surface with a steel trowel.

3. **Waterproofing Cement Plastering on Walls.** Shall be done in two stages, using coats of mortar adding to a total of ¾"thickness minimum, and spread to the height indicated in the Construction Drawings. The upper edge of the plaster coat shall be finished to a quarter mold shape. All corners and angles shall be rounded to a minimum radius of ½"unless otherwise indicated in the Construction Drawings.

   a) The waterproof cement mortar shall be made by mixing one part cement, three parts sand, one-tenth part of hydrated lime, to these materials the amount of waterproofing compound recommended by the manufacturer and sufficient water to obtain a workable paste consistency shall be added. No mortar shall be used after one half hours have elapsed from the time of its mixing.

4. **Non-Slip Finish On Stair Treads and Landings.** Unless otherwise indicated in the Construction Drawings a non-slip finish shall be applied to all exterior stair treads and landings. In addition to the metal nosing)-metal woods, and shall be produced by embedding the non-slip compound in the cement finish surfaces, following the instruction of the manufacturer as to quantity required, and finish given to surface.

   a) Applied Waterproofing Roof Finish. The waterproofing of concrete roof surfaces as indicated in the Construction Drawings shall follow the manufacturer's instruction.

5. **Grading of Structural Slabs.** The contractor while establishing grades and levels shall take care for structural slabs, to allow for the thickness of the cement finish courses in each case without reducing the thickness of slabs. Grades shall comply with all lines and levels a shown in the Construction Drawings.

6. **Pitch and Finish of Roof Slabs.** The pitch of the roof slab shall be obtained by increasing the thickness of the concrete roof slabs while pouring to comply with the pitch lines and grades indicated and given an integral applied waterproof finish.

7. **Rubber Finish.** Shall be applied to Concrete Work as indicated in plans, as specified and/or as required by Engineer.

8. **Exposed Concrete Surface.** Exposed concrete finish shall be used where called for in the Construction Drawings and as specified herein. Form work design and location shall be as shown in the Construction Drawings to attain the desired from mark finish throughout the surface. Form-work shall be completely clean and free form loose particles, dirt, etc. After removal excess finish a rough edges shall be knocked-off. Samples panels not less 1.22 m x 1.22 m will be required for approval by the engineer.

9. **Cleaning Finished Exposed Concrete Surfaces.** In the event that efflorescence, stains, oil, grease, or any unsightly accumulation of foreign materials are visible on the exposed surfaces of finished concrete, the engineer may require remedial action to remove these blemishes. Such action may cover all exposed concrete, or when irregular lapping can be avoided, only such parts as are affected by the stains or other unsightly appearances, cleaning shall proceed as follows:

   a) Remove oil and grease with detergents and thoroughly wash with water. While the surface is wet, apply a grout coat of cement and fine sand mixed 1 to 1½" with white cement added as direct to attain desired color. Immediately float surface with cork or other suitable floats to fill any holes. While the grout is plastic, finish with a sponge rubber float, removing excess grout. This shall be done when grout will not be pulled from holes. Allow surfaces to dry thoroughly, then rub with dry burlap to remove all dry loose grout. Complete all cleaning of any section in one day, leaving no loose grout on the surface overnight.

   b) Spots of streaks remaining may be honed dry ad lightly so as not to change the texture of the concrete.

C. Clean up: At termination operations in each area, remove all equipment and surplus materials, trash, mortar, mortar stains, and mortar droppings, leaving the area net and clean.

SECTION 093110
CERAMIC FLOOR AND WALL TILE

PART 1. GENERAL

1.01 SUMMARY

1.01.1 SECTION INCLUDES

This section includes furnishing all materials and perform all work necessary to install all ceramic floor and wall tile and accessories indicated in the Construction Drawings or as specified herein.

1.01.2 CERTIFICATIONS

A. The Contractor shall furnish the Engineer with a certificate of grade properly filled on the form of Grade Certificate of the Associated Tile Manufacturers. This certificate shall be signed by the manufacturer of the tile and shall state the grade, kind and full qualities of tile.

PART 2. PRODUCTS

2.01 MATERIALS

A. All tile shall be STANDARD GRADE in accordance with the grade specifications of the U.S. Department of Commerce Simplified Practices Recommendation R-51-30, and shall also conform to the 200 pounds crazing test, bond test, and glaze test as outlined by the Tile Industry Research Bureau on Specifications R-TS-2.

Color of the tile shall be as selected by the Engineer from the standard color range for each type of tile.

B. Floor tile shall be Dust Pressed Un-glazed Ceramic Mosaic Tile. Unless otherwise called for in the Construction Drawings, size of floor tile shall be 1” x 1”, 1”x 2”, or 2" x 2", x 1/4" thick. Tile shall be mounted on sheets of approximately 2 feet square.

C. Wall tile includes all wall tile, base, caps, and trimmers such as window trim, door trim, coves, returns, miters, and other specials, and it shall be Dust Pressed, glazed tile, having an impervious glassy texture, mat finish. Tile shall have a semivitreous or non-vitreous body. Unless otherwise called for in the Construction Drawings, size of the tile shall be 4-1/4" x 4-1/4", coved base 4-1/4" x 5", caps 2" high. Thickness of the tile shall be 3/8". All tiles shall have cushion edges.

D. Cement. Shall be of the best quality Portland cement of a well known and established brand, conforming to the Specifications for Portland cement ASTM, serial designation C150 latest edition and shall be type 1.

E. White Portland cement. White Portland cement shall conform to the standard Specifications of the ASTM, for masonry cement, serial designation C91 latest edition.

F. Sand. Shall conform to the Standard Specifications for the ASTM, serial designation C144 latest edition.

G. Hydrated lime. Shall be hydraulic hydrated lime conforming to the standard specifications of the ASTM, serial designation C141 latest edition.

H. Lime putty. Shall be a stiff mixture of hydrated lime thoroughly soaked in water for a period of at least 24 hours and kept moist until used, 44 lbs. of hydrated lime are required to make one cubic foot of lime putty.

I. Water. Shall be fresh, clean and free from alkali or organic matter.

J. Mortar. Shall be mixed in the proportions by volume of one (1) part of cement and three (3) parts of sand, with sufficient water to obtain a workable paste consistency.

1. **Mortar for setting wall tile.** Shall be mixed in the proportions by volume of one (1) part of cement, one half (1/2) of one part of lime, and three (3) parts of sand and the necessary amount of water.

2. **Mortar for scratch coat.** Shall be mixed in the proportions by volume of one (1) part of cement, one quarter (1/4) of one part of lime putty and three (3) parts of sand and the necessary amount of water. Mortar shall be mixed in quantities to supply the immediate requirements of the work. Retempering of mortar which have started its initial setting will not be permitted

PART 3. EXECUTION

3.01 CONSTRUCTION AND INSTALLATION

A. The Contractor shall furnish all materials and perform all work necessary to install all ceramic floor and wall tile and accessories as indicated in the Construction Drawings or as specified herein.

B. Installation of Floor tile.

Prior to spreading the floor tile setting mortar, the surface of the structural slab shall be washed out clean, and uniformly dusted with Portland cement.

The mortar for setting floor tile shall be spread until the surface of the mortar setting bed is true and even in place, so that after the tile is set the finished surface of the tile shall correspond to the finished elevations and grade shown in the Construction Drawings.

The size of the area of tile that can be placed at one time is the area that can be covered with tile before the mortar has reached its initial setting. All portions of mortar bed not finished within the period, shall be cut back to a clean beveled edge and removed from the work.

Immediately after spreading and screeding the mortar bed, the surface shall be uniformly dusted with Portland cement, proceeding with the setting of the tile, by firmly pressing and taping the tile into the mortar until exactly true and even with the finish floor lines. Tiles and ceramic sheets shall be laid to a straight edge at regular intervals.

Tile shall be extended into all recessed openings and shall be neatly fitted around angles, projections, curbs or fixtures that are raised of the floor.

Joints in floor tile shall have a width of 1/16 of an inch.

After the mortar bed has set sufficiently, the tile on floor shall be scrubbed and washed clean with clean water. Tile joints, should then be grouted with a mixture of Portland cement and water brought to the consistency of thick cream, dusted with cement, and wiped flush with the tile surface, and leaving face of tile absolutely clean after this operation.

C. Installation of Wall tile.

Prior to the start of setting wall tile, and not less than 24 hours or more than 48 hours, the wall surface to be tiled shall receive a scratch coat of mortar not less than 3/8 of an inch thick. This is made to bring the rough concrete surface to a plumb straight plane. The finished surface of this scratch coat shall be properly scored while still plastic to provide good bond for the tile setting mortar. Before applying this scratch coat, surfaces shall be cleaned and thoroughly wetted.

Immediately before setting wall tiles, the scratch coat shall be thoroughly saturated with water and spotted with pieces of tile set in mortar, plumb and true to the required finish surface of the tile.

All wall tiles shall be washed clean and well cooked for 12 hours at least in clean water, and lay while wet.

Where glazed tile base is indicated in the Construction Drawings or specified, this shall be set in place, prior to the installation of the wall tile and floor tile, to establish the true finished lines of the walls and floors. All interior and exterior wall angles shall be fitted with the corresponding angle molding. Base tiles shall be so placed that the inside of the cove shall be at the line of the finished floor.

The back of each tile shall be buttered with wall tile setting mortar, tamped solidly into place, pegged and brought to a plumb and true surface, out of wind, and flush with the reference spots or other adjoining tile work. All wall tiles shall be cut and fitted neatly around all pipes, fixtures, outlets, etc. Cracked, chipped or broken tile will not be accepted.

Wall tile shall be laid lengthwise following a true horizontal line, and where avoidable, tiles measuring less than half the size of a tile shall not be used. All cut edges of tile shall be ground or rubbed until smooth before set in place.

All internal and external angles of walls shall be formed with integral coved and integral bullnosed tile following the lines of the base angles previously set and forming vertical straight-line joints. Door jambs and window jambs and still shall be adequately finished with the required trimmings. All coves, nosing, trims, etc. shall be backed up with setting mortar.

Where glazed wall surface do not continue the total height of the wall, the top edge of the tile surface shall be finished with a cap molding.

Unless otherwise specifically indicated in the Construction Drawings, all wall surfaces shown to be glazed shall be covered in full with glazed tile to the required height, regardless of the space to be occupied by any fixture or equipment to be installed against the wall.

The height of the wall glazed tile areas shall be as indicated in the Construction Drawings and when so indicated revolved over the windowsill and jambs.

Wall tile joints shall be 1/16 of an inch.

Immediately after tile is set in place, the back of each tile shall be filled solidly with mortar, irrespective of the width of the space between the tile and the scratch coat, and each course of tile shall be so grouted before the next course is set.

After setting tile, and as soon as the mortar and grout has sufficiently hardened, the tile joints shall be racked out, removing all mortar and stains, and washing the tile surface with clean water. Joints shall then be filled with a mix of white Portland cement and water brought to the consistency of thick cream. After joints have been grouted, they shall be sprinkled with dry white cement, grout forced into the joints and excess wiped out, to bring to the correct depth

D. Tile Accessories.

The Contractor shall make provision while performing the tile work, for the furnishing and installation of the fixture accessories, when so indicated in the Construction Drawings or ordered by the Engineer.

E. Cleaning and Protection.

At the termination of the tile work, the Contractor shall wash and thoroughly clean all tile surfaces free of dirt, mortar, stains, etc. All rubbish and surplus materials shall be removed, and floor covered with heavy building paper and boards to protect work until final completion of the building.

SECTION 093310
QUARRY TILE

PART 1. GENERAL

1.01 SUMMARY

1.01.1 SECTION INCLUDES

A. Contractor shall furnish all materials and perform all work necessary to install all quarry tile and accessories indicated in the Construction Drawings or as specified herein.

B. The extent of quarry tile work is shown in the Construction Drawings and in schedules.

PART 2. PRODUCTS

2.01 MATERIALS

A. Provide quarry tile certified by the Tile Council of America (TCA) to equal or exceed the Standard Grade Requirements of ANSI A137.1.

Products offered by manufacturers to comply with the requirements for quarry tile include the following:

1. American Olean Tile Co.

2. Ludowicici-Celadon Co.

3. Mosaic Tile Co.

4. Summitville Tiles, Inc.

5. Texeramics, Inc.

When using, setting and grouting materials manufactured under TCA license provide such identification together with formula on each container.

Provide materials obtained from only one source for each type of tile and color to minimize variations in appearance and quality.

B. Delivery and Storage. Deliver materials and store on the site in original containers with seals unbroken and labels intact until time of use.

C. Proprietary materials. Handle, store, mix and apply proprietary setting and grouting materials in compliance with the manufacturer's instructions.

D. Quarry Tile. Comply with ANSI A137.1, Standard Grade, square-edge ground 4 sides, sizes, shapes and colors.

Whenever shown as “Non-Slip”, provide manufacturer’s standard abrasive-surface tile with aluminum oxide abrasive aggregate, or other rustproof aggregate of comparable hardness, uniformly distributed in face of tile. Tiles showing uneven distribution are not acceptable.

E. Trim Shapes. Provide standards trim shapes as required for complete installation, of same material, size, color and finish of field tile.

F. Portland Cement Mortar and Grout Materials. Provide mortar and grout materials as specified in the ANSI A108 series installation specifications, when called for in the Construction Drawings.

G. Color Pigment. Mineral oxides, unaffected by limes, cement or weathering. Use only when required for selected grout color.

H. Dry-set Mortar. Pre-sanded Portland cement and additives complying with ANSI 118.1.

I. Furan Mortar. Two- component polyfurfuryl alcohol-base resin and hardener, with high resistance to strong acids, organic and non-oxidizing inorganic acids, and week alkalied.

Products offered by manufacturers to comply with the requirements for furan resin mortar include the following:

1. **Furnace Atlas.** Mineral Products Co.

2. **Furnace Mortar.** L & M Surco Mfg. Co.

J. Epoxy Mortar. Two component epoxy resin, hardener, and mineral filler complying with ANSI A118.3.

K. Commercial Cement Grout. A proprietary compound of Portland cement and additives, factory blended to decrease shrinkage and increase moisture resistance.

Products offered by manufacturers to comply with the requirement for modified Portland cement grout include the following:

1. Hydroment Joint Filler; the Upco Co.

2. L & M Acid-R Grout; L & M Surco Mfg. Co.

L. Furan Grout. Two-component polyfurfuryl alcohol-based resin and hardener, with high-resistance to acids and alkalies.

Products offered by manufacturers to comply with the requirements for furan resin grout include the following:

1. Furnace: Atlas Mineral Products Co.

2. Furan Grout: L & M Surco Mfg. Co.

M. Epoxy Grout (Joints over 3/26" Wide). Two component epoxy resin and hardener with mineral filler, complying with ANSI A118.3, color as shown or as required to match Engineer's sample.

Products offered by manufacturers to comply with the requirements for epoxy grout include the following:

1. Epoxy Grout, L & M Surco Mfg. Co.

2. U-Epoxy; The Upco Co.

N. Epoxy Grout (Joints less than 3/16" Wide). Two-component epoxy resin and hardener, complying with ANSI A118.3.

Products offered by manufacturers to comply with the requirements for epoxy grout include the following:

1. Epoxy Grout, L & M Surco Mfg. Co

2. U-Posy CT; The Upco Co.

PART 3. EXECUTION

3.01 CONSTRUCTION AND INSTALLATION

A. Contractor shall furnish all materials and perform all work necessary to install all quarry tile and accessories indicated in the Construction Drawings or as specified herein.

The extent of quarry tile work is shown in the Construction Drawings and in schedules.

B. Installer must examine the substrate and the conditions under which file is to be installed, and notify the contractor in writing of any conditions detrimental to the proper and timely completion of the work. Do not proceed with the work until unsatisfactory conditions have been corrected in a manner acceptable to the Installer.

C. Comply with ANSI standard installation specification A108.3, A108.7 and the Tile Council of America "Handbook For Ceramic Tile Installation", except as otherwise shown or specified. Provide minimum temperature limits and installation practices as recommended by mortar and grout materials manufacturers.

Extend tile work into recesses and under equipment and fixtures, to form a complete covering without interruptions, except as otherwise shown. Terminate work neatly at obstructions, edges and corners without disruption of pattern or joint alignments.

Comply with manufacturer's instructions for the mixing and installation of proprietary materials.

Neutralize and seal substrates in accordance with mortar or adhesive manufacturer's instructions, where required.

D. Setting Beds. Provide setting beds as shown in the Construction Drawings. Use Portland cement, unless otherwise indicated.

E. Jointing Pattern. Unless otherwise shown, lay tile in grid pattern. Align joints when adjoining tiles on floor, base and trim are the same size. Layout tile work and center tile fields both directions in each space. Adjust to minimize tile cuttings.

Provide uniform ¼" joints widths, unless otherwise shown.

F. Grout. Use commercial cement grout of one part Portland cement to 2 parts fine sand, and up to 1/5 part lime, for grouting quarry tile floors, unless otherwise shown or specified.

Use epoxy grout where shown or schedule.

Use furan grout where shown or schedule.

G. Expansion and Control Joints. Provide expansion and control joints where shown. Install as recommended in the TCA "Handbook for Ceramic tile Installation", unless otherwise shown. Install removable divider strips of the same depth as the finished tile system, including setting bed. Remove strips after grouting and curing operations. Sealants are specified in Section 07951.

H. Cleaning. Upon completion of setting and grouting, clean quarry tile installations as recommended by TCA and manufacturers of proprietary materials.

Tiles may be cleaned with acid solutions only when permitted by the tile and grout manufacturer's printed instructions, but not sooner than 14 days after installation.

Protect all metal surfaces, cast iron and vitreous plumbing fixtures from effects of acid cleaning. After cleaning, flush with clean water.

I. Finished Tile Work. Leave finished installation clean and free of cracked, chipped, broken, unbounded, or otherwise defective tile. Remove and replace all defective tile work.

J. Protection. Protect installed quarry tile work with paper or other heavy covering during the construction periods to prevent damage and wear.

SECTION 095100
ACOUSTICAL CEILINGS

PART 1. GENERAL

1.01 SUMMARY

1.01.1 SECTION INCLUDES

A. Under this section the contractor provide all labor, materials, equipment and incidentals as shown, specified, and required to furnish and install acoustical ceilings. The Work also includes:

1. Providing openings in acoustical ceilings to accommodate the Work under this and other Sections and building into the acoustical ceilings all items such as sleeves, anchor bolts, inserts and all other items to be embedded in acoustical ceilings for which placement is not specifically provided under other Sections.

B. The extent of acoustical ceiling Work is shown in the Construction Drawings.

C. The types of acoustical ceilings required include the following:

1. Acoustical lay-in panels.

2. Miscellaneous materials and accessories.

1.01.2 RELATED SECTIONS

A. Coordination. Review installation procedures under other Sections and coordinate the installation of items that must be installed with the acoustical ceilings.

1.02 REFERENCES

A. Reference Standards Comply with applicable provisions and recommendations of the following, except where otherwise shown or specified.

1. Acoustical and Insulating Materials Associations Performance Data, Architectural Acoustical Materials.

2. ASTM C423, Methods of Test for Sound Absorption of Acoustical Materials in Reverberation Rooms.

3. ASTM E1477, Rev. A, ST Method for Luminous Reflectance Factor of Acoustical Materials by Use of Integrating Sphere-Reflectometers.

4. ASTM C535, Metal Suspension Systems for Acoustical Tile and Lay-In Panel Ceilings.

5. ASTM C636, Standard Practice for Installation of Metal Ceiling Suspension Systems for Acoustical Tile and Lay-In Panels.

6. ASTM D1779, Adhesive for Acoustical Materials.

7. ASTM E84, Methods of Test for Surface Burning Characteristics of Building Materials.

8. ASTM E90, Methods of Test for Laboratory Measurement of Airborne Sound Transmission Loss of Building Partitions.

9. ASTM E413, Sound Transmission Class, Classification for Determination of.

10. UL Building Materials List, Guide No. 40 U18.1, Acoustical Materials.

11. UL Guide No. 40 UB.I, Fire Hazard Classification.

1.03 SUBMITTALS

1.03.1 SHOP DRAWINGS

A. Submit for approval the following:

B. Copies of manufacturer's product specifications and installation instructions for each acoustical ceiling material required, and for each suspension system. Include certified laboratory test reports and other data as required to show compliance with these Specifications.

1. Include manufacturer's recommendations for cleaning and refinishing acoustical units, including precautions against materials and methods, which may be detrimental to finishes and acoustical performances.

C. Details and reflected ceiling plans of suspension systems specified in this Section. Show location of ceiling units and other items of Work which are to be coordinated with the ceiling, and show framing and support details for Work supported by the suspension system. Certify compliance with ASTM C635 and other specified requirements, and indicate structural classification of each type of suspension system.

1.03.2 SAMPLES.

Submit for approval the following:

A. 0.30-meter square samples for each acoustical unit required. Samples shall show the full range of exposed color and texture to be expected in the completed Work. Engineer's review will be for color and texture only. Compliance with other requirements is the exclusive responsibility of contractor.

B. 0.30 meter long samples of each exposed runner and molding. Engineer's review will be for color and texture only. Compliance with other requirements is the exclusive responsibility of Contractor.

1.03.3 MAINTENANCE STOCK

A. At time of completing the installation, deliver stock of maintenance material to the Authority. Furnish full size units matching the units installed, packaged with protective covering for storage, and identified with appropriate labels.

1. Acoustical Units: Furnish one unopened carton for each type of acoustical panel.

1.04 QUALITY ASSURANCE

1.04.1 DESIGN CRITERIA.

A. Standards for Terminology and Performance: Applicable publications by the Acoustical and Insulating Materials Association (AIMA), including "Performance Data, Architectural Acoustical Materials".

B. Requirements of Regulatory Agencies.

1. FM Compliance: Class I.

2. UL Fire Hazard Classification: Acoustical tile ceilings shall comply with a fire hazard classification for flame spread, including fuel contribution and smoke development classifications where shown or specified, provide tile which has been tested, rated and labeled by UL for the indicated ratings as listed in the 'Classified Building Materials Index' by UL.

3. Classification: Maximums of 25 for flame spread, 25 for fuel contributed, and 25 for smoke developed (Class 25).

4. Light Reflectance Ratings: Except as otherwise shown or specified, provide factory-finished acoustical tile which has been tested by a recognized testing laboratory, in accordance with the procedures of ASTM C523, to show a light reflectance rating of not less than the required rating indicated.

5. Noise Reduction Coefficient (NRC): The average of sound absorption coefficients (tested in accordance with ASTM C423) reported by AIMA method for a specification range of 10 points, for middle frequencies of 250, 500, 1000, and 2000 Hertz. Provide not less than the required NRC rating specified.

6. Sound Transmission: Provide tile which has been tested for sound transmission loss through the acoustical tile ceiling, determined in accordance with ASTM E90 and ASTM E413, and reported as a 5 Db range. Provide not less than the required STC class specified.

C. Allowable Tolerances

1. Surfaces to receive acoustical treatment: Free from irregularities and level to within 1/4 inch in 12 feet.

2. Deflection:

a) Suspension system components, hangers and fastening devices supporting light fixtures, ceiling grilles, and acoustical units: maximum deflection 1/360 of the span.

b) Deflection Test: ASTM C635.

c) Allowable tolerance of finished acoustical ceiling system: Level within 1/8-inch in12 feet.

d) Accessibility percentage: 100.

1.05 DELIVERY, STORAGE AND HANDLING

A. Delivery of Materials. Deliver materials in original, unopened, protective packaging, with manufacturer's labels indicating brand name, pattern, size, thickness and fire rating as applicable, legible and intact.

B. Storage of Materials

1. Store materials in original protective packaging to prevent soiling, physical damage or wetting.

2. Store cartons open at each end to stabilize moisture content and temperature.

3. Do not begin installation until sufficient materials to complete a room are received.

1.06 PROJECT/SITE* CONDITIONS

1.06.1 ENVIRONMENTAL REQUIREMENTS

A. Complete Installation of dampening materials before beginning Work.

B. Maintain humidity of 65 to 75 percent in area where acoustical materials are to be installed 25 hours before, during, and 25 hours after installation.

C. Maintain a uniform temperature in the range of 75-80 F prior to and during Installation of materials.

D. Do not install acoustical ceilings until space has been enclosed and is weather-tight, and until wet-work in the space has been completed and is nominally dry, and until Work above ceilings has been completed, and ambient conditions of temperature and humidity are continuously maintained at values near those indicated for final occupancy.

PART 2. PRODUCTS

2.01 CEILING UNITS

A. Acoustical Tiles - Ceramic Finish

1. Area to Installation. Bathroom, toilets, and elsewhere shown on reflective ceiling plan.

2. General. Unless otherwise specified, provide a ceramic ceiling tile suitable for installation in areas of high humidity. Provide 24 inch by 24-inch grid size tiles, with square edge.

3. Color: White.

4. Provide units not less than 5/8-inch thick and of a density not less than 1.40 pounds per square foot.

a) Product and manufacturer: Provide one of the following:

b) Ceramaguard by Armstrong.

c) Or approved equal.

B. Acoustical Tiles - Paint Finish:

1. **Area of Installation**: General occupancy areas as shown on reflected ceiling plan.

2. **General.** Unless otherwise specified, Provide standard tiles of the type recommended by the manufacturer for the application shown or specified, made from molded high density mineral fibers and binders. Provide 24-inch by 48-inch grid-size tiles, with square edge. Provide washable plastic coating finish.

3. **Color**: White.

4. Mineral Fiber Acoustical Panels: Provide units not less than 5/B-inch thick and of density not less than 0.85 pounds per square foot, medium-coarse non-directional texture.

5. Product and Manufacturer: Provide one of the following:

   a) Minatone Designer and Armstrong.

   b) Or approved equal.

2.02 CEILING SUSPENSION MATERIALS

A. General. Comply with ASTM C635, ms applicable to the type of suspension system required forth, type of ceiling units specified. Coordinate with other Work supported by or penetrating through the ceilings, including light fixtures and HVAC equipment.

1. Structural Class: Intermediate-duty system (Aluminum).

B. Exposed Grid Suspension System:

1. Main Runners: Shall be the manufacturer's standard stock design, extruded aluminum not less than O.062-inch, with a white finish. The web height of the runners shall be not less than 1-1/2 inches.

2. Cross Runners: Shall be the manufacturer's standard stock design extruded aluminum not less than O.062-inch thick, with a white finish. The web height of the runners shall be not less than 1-inch.

3. Molding shall be 1-1/2 inch by 1-1/2 inch aluminum angles, O.062-inch thick, white finish.

PART 3. <u>EXECUTION</u>

3.01 PREPARATION.

A. Measure each ceiling area and establish layout of acoustical units to balance border widths at opposite edges of each ceiling. Avoid the use of less-than-half width units at borders, and comply with reflected ceiling plans wherever possible.

3.02 INSTALLATION ACOUSTICAL PANELS

A. General. Install materials in accordance with manufacturer's instructions.

B. Install suspension systems to comply with ASTM C636, with hangers supported only from building structural members as shown. Locate hangers near each end and spaced 4 feet along each carrying channel or direct-hung runners, unless otherwise shown.

1. Secure wire hangers by looping and wire tying, either directly to structures or to inserts, eye-screws or other devices approved by Engineer.

2. Use at least 3 full twists per tie.

C. Install edge moldings of the type shown at edges of each acoustical ceiling area, and at locations where edge of units would otherwise be exposed after completion of the Work.

1. Sealant Bed: Apply continuous ribbon of acoustical sealant; concealed on back of vertical leg before fastening to vertical surface.

2. Secure moldings to building construction by fastening with screw-anchors into the substrate, through holes drilled in vertical leg. Space holes not more than 7.62 cm from each end and not more than 16 inches on centers along each molding.

3. Level moldings with ceiling suspension system, to a level tolerance of 32 mm in 3.66 meters.

4. Miter corners of moldings accurately to provide hairline joints, securely connected to prevent dislocation.

D. Install acoustical tiles in suspension system as recommended by the manufacturer.

E. Install all acoustical tiles using an adhesive recommended by the acoustical tile manufacturer specifically for applying acoustical tile. Strictly follow adhesive manufacturer's recommendations in order to provide an acceptable installation.

F. Mechanically fasten and spline all acoustical tile in addition to adhesive mounting.

3.03 ADJUSTMENT AND CLEANING

A. Clean exposed surfaces of acoustical ceilings, including trim, edge moldings and suspension members; comply with manufacturer's instructions for cleaning and touch-up of minor finishes damage. Remove and replace Work that cannot be successfully cleaned and repaired to permanently eliminate evidence of damage.

B. The installer shall advise Contractor and Engineer of required protection for the acoustical ceilings, including temperature and humidity limitations and dust control, so that the Work will be without damage and deterioration at the time of acceptance by the Authority. Contractor shall provide required protection.

SECTION 099100
PAINTING

PART 1. GENERAL

1.01 SUMMARY

1.01.1 SECTION INCLUDES

A. This section includes furnishing all labor, materials and equipment necessary to perform and complete the painting and finishing required for interior and exterior of structure or elsewhere, as indicated in the Construction Drawings and/or required by the Engineer.

1.02 DEFINITIONS

Painting. The term "painting" as used herein includes the use of emulsion, enamel, paints, sealers, and other coating, organic an inorganic whether used as primer, intermediate or finish coats.

1.03 SUBMITTALS

A. All materials shall be subject to approval by the Engineer. The Contractor shall, if required, submit samples for approval.

B. Color, Texture and Workmanship Submittal. The Contractor shall prepare and fully coat a designated area or item of each kind of surface to be painted. Once a wall, space or item has been approved by the Engineer for color, texture and workmanship, the wall, space or item shall become the standard for successive work.

C. After final approval of all colors by the Engineer the Contractor shall submit to the authorized representative of P.R.A.S.A., color chips of all paint used with the manufacturer's name and his designation of the paint and color for the purpose of the future reordering of paint. Color chips shall measure at least six square inches.

D. The Contractor shall be responsible for the coordination of all paint materials to be supplied in the shop and field, and shall submits a complete list of all such paint materials to the engineer for approval prior to their application in either field of shop, with certification from the material suppliers that such prime and finish coat materials are compatible prime coat which is incompatible with the specified finishing material or is improper for the purpose then such prime coat shall be removed and the surface prepared for painting as specified hereinafter.

1.04 DELIVERY, STORAGE AND HANDLING

A. Storage. All materials used in the work shall be stored in an approved location. Such storage space shall be kept neat and clean; all damage there to or its surroundings shall be repaired prior to completion of the work. Oily rags, waste and similar articles shall be removed from the buildings every night. Every precaution shall be taken to avoid danger of fire. Proper containers outside of the building shall be provided by the contractor and used for painting waste and no plumbing fixtures shall be used for this purpose.

1.05 QUALITY ASSURANCE

A. Workmanship:

B. It is intended that all painting work be first class. Materials shall be evenly spread without runs or sags. There shall be an easily perceptible difference in shades of successive coats of paint. The contractor shall notify the engineer upon completion of a particular coat. Once inspected and approved, the painter may proceed with the next coat.

C. The painter shall examine the specifications for the various other trades whose work is to be finished under this section. Any materials requiring painting, which are left unfinished by requirements for such other trades, shall be painted to completion under this section. Unless specifically excluded, any defects in such work, which would have an adverse affect on the finish, shall be corrected before any work of painting is started.

D. Painting shall be done with all possible care to protect this work and the work of other trades. All damage to this and other work caused by the operations under this section of the specifications shall be corrected or repaired as required.

E. Hardware and nameplates shall be removed during the painting operations. The painter shall apply clear plastic by spray can of brush to all nameplates

PART 2. <u>PRODUCTS</u>

2.01 MATERIALS

A. Paint products shall be supplied by a manufacturer experience in and specializing in the compounding of paints and coatings suitable for use in wastewater treatment plants and facilities.

B. The paints and paint products of the Glidden Company, the Koppers Company, Inc., Themec Company, Inc., and the Pittsburgh schedules are given as standards of quality. The usual "or approved equal" clause shall apply. No request for substitution will be considered which decrease the film thickness and/or the number of coats to be applied, or which offers a change form the generic type of coating specified.

C. All painting materials shall be delivered to the mixing room in unbroken packages, bearing the manufacturer's brand and name.

D. Paints containing lead surpass federal maximum levels will not be allowed. Oil shall be pure boiled linseed oil.

E. Vinyl Paint. Shall be first quality paint suitable for use on interior and exterior of concrete masonry surfaces. It shall prevent moisture from reaching the inner side of walls by acting as sealer.

F. All colors are to be selected by the Engineer.

2.02 FINISHES

A. Paint Color. The manufacturer shall be able to furnish all paints for exposed surfaces in a wide range of colors and lighter and darker of these colors.

The color scheme shall be in accordance with schedules provided by the engineer, and all tinting and matching shall be to satisfaction of the Engineer, where standard chart colors are not satisfactory. Two or more colors may be use in any given room or area.

All exposed piping and related equipment in the fueling facilities areas shall be color-coded in accordance with the Occupational Safety and Health Act. Where a single color is specified the pipe shall be finish painted continuously over its entire exposure. All sampling pipelines shall be color coded as indicated on the product sample.

Contractor shall follow the Standard Color Code of the Puerto Rico Aqueduct and Sewer Authority included in this section and/or as required by Engineer. The applicable safety color standards related to the Occupational Safety and Health Act of 1970, shall have priority over any other color.

B. Compatibility of coatings. Shop painting of materials and equipment is required under the various sections of the contract. All prime coat paint materials and/or manufacturer's standard paint system shall be compatible with the finish coat materials, to be furnished under this section. The contractor shall be responsible for the coordination of all paint materials to be supplied in the shop and field, and shall submits a complete list of all such paint materials to the engineer for approval prior to their application in either field of shop, with certification from the material suppliers that such prime and finish coat materials are compatible prime coat which is incompatible with the specified finishing material or is improper for the purpose then such prime coat shall be removed and the surface prepared for painting as specified hereinafter.

PART 3. <u>EXECUTION</u>

A. Contractor shall furnish all labor, materials and equipment necessary to do all painting and finishing as specified in the Construction Drawings , for interior and exterior of structure, or elsewhere as ordered by the Engineer. All paint shall be prepared and applied in strict accordance with the instructions furnished to the Contractor.

B. Skilled workmen shall do all painting, and all surfaces shall be perfectly clean, smooth, free from scratches and thoroughly dry before starting any painting. No coat shall be applied until the preceding coat has thoroughly dried. All painting shall be evenly spread, and well brushed until there are no drops, runs or sagging of materials, and when the work is finished there shall be no brush marks left on the surfaces.

Paint shall be applied in the number of coats specified in the Constrution Drawings before or as directed by the Engineer. Surfaces, which cannot be satisfactorily finished in the specified number of coats, shall have such additional coats or such preparatory coats and subsequent coats as may be required to produce a satisfactory finished coat. The completed work shall be of exact shades and textures selected. Work that is not to be finished under this section shall be protected against spatter, stains, or spilling, and each type finish shall be protected against similar defacements by other finish.

1. **Exterior Concrete.** Treat all exterior concrete surfaces designated to be painted as follows:

   a) Step One. Remove dust, form oil, curing compound, laitance, surface glaze, and other foreign matter. Brush blast to remove old paint and foreign matter.

   b) Step Two. Rinse with water.

   c) Step Three. Apply one of the following acrylic latex systems:

      1) Devoe 2.8 mils system. One coat 13xx Tru-Vy-Kote Vinyl Acrylic Masonry. Paint with one pint 16200 Wonder Bond Mixing Liquid per gallon added, 1.4 mils. One coat 13xx Tru-Vy-Kote Vinyl Acrylic Masonry Pint, 1.4 mils.

      2) DuPont 3.0 mils system. Two coats Lucite House Paint 1300 Series, 1.5 mils each.

      3) PPG 3.6 mils system. Two coats 6-650 Series Speedhide Acrylic Latex House Paint, 1.8 mils each.

      4) Sherwin 2.6 mils system. Two coats Weather Perfect Acrylic Latex Flat Exterior Finish, B-36 Series, 1.3 mils each.

2. **Interior Concrete.** Designated interior exposed concrete surfaces, including wall, ceiling, pilasters and columns, and like items.

   a) Step One. Remove dust, form oil, curing and other foreign matter.

   b) Step Two. Etch surface with a 10 to 12 percent solution of muriatic acid.

   c) Step Three. Rinse with water to remove all acid residue.

   d) Step Four. Apply one of the following alkyd systems:

      1) Devoe 3.7 mils system. One coat 50501 Devoe Alkyd Primer, 1.3 mils. Two coats 23xx Velour Eggshell with final coat roller stripped 1.2 mils each.

      2) DuPont 4.5 mils system. One coat Lucite Alkyd Interior Primer 853c, 1.5 mils. Two coats Custom Color Semi-Gloss 1911c or 1912c, 1.5 mils each.

      3) PPG 4.5 mils system. One coat 6-3 Resistant Primer, 1.5 mils. Two coats 50-65 Snolite Alkyd Stippling Eggshell Enamel with final coat roller stippled 1.5 mils each.

      4) Sherwin 6 mils system. One coat Wall and Wood Primer, B49 W 2, 2 mils. Two coats Eggshell Enamel, B33 W 100 with final coat roller stippled 2 mils each.

C. Shop painting is required for all of the various items of equipment and other ferrous metal items furnished under the contract. Shop painting shall conform to the applicable requirement of this section for pre-finishing, cleaning, and shop painting of the metal surfaces.

Contractor shall field paint all miscellaneous ferrous metal, structural steel, equipment including equipment previously shop painted with manufacturer's standard paint systems, piping, valves, gates, and specials. All exposed interior concrete blocks above grade, interior submerged tanks walls and pump station wet well walls abutting occupied areas, and all other work obviously required to be painted unless otherwise specified.

D. Coordination and work specified elsewhere:

The contractor shall coordinate the work specified in this section with that in other sections of this specifications in order that all necessary items shall be provided as required for satisfactory operation and that the various items of equipment will properly fit and operate in the spaces allotted to them.

The following work is specified elsewhere:

1. Concrete work

2. Masonry work

3. Mechanical Work

4. Electrical work

E. Preparation of surfaces for shop/or field painting. All metals surfaces to be shop painted or which where improperly shop painted, and all abraded or rusted shop painted metal surface which are to be field painted shall be prepared as specified herein and shall be dry and clean before painting. All non-metal surfaces shall be prepared as specified herein. No field painting shall be done until the Engineer approves the surface.

1. Non-submerged metal surfaces. These surfaces shall be cleaned with a commercial blast (SSPC-SP6), except that motors and like items that may be damage by blasting and cast iron pipe and fittings may be prepared by other approved means.

2. All submerged or intermittently submerged metal surfaces. These surfaces shall be cleaned with near white metal blast (SSPC - SF10).

3. Concrete and masonry surfaces. All concrete and masonry surfaces shall be cleaned of all dust, from oil, curing compounds and other foreign matter.

Before applying coating to submerge concrete or concrete floors, these surfaces shall be etched with a 15 percent muriatic acid solution. The acid shall be washed off with water 30 minutes after it is applied. If required to obtain a clean concrete surface or if required by Engineer the procedure shall be repeated until the desired results are obtained.

4. Wood surfaces. Shall be thoroughly cleaned of all extraneous matter and all cracks, nail holes, and other defects properly filled after priming and smoothed. Wood trim shall be sandpaper to a fine finish and wiped clean of dust.

5. **PVC Piping.** Lightly sands all surfaces to be painted.

6. **Gypsum plaster.** Any rough spots in plaster surfaces shall be sanded smooth and sealed before application of the priming coat.

   All suction spots of the plaster (hot spots, after the application of the first coat shall be touched up before applying the second coat to produce an even result in the finish coat.

F. Application of Paint. On metal surfaces, the painter shall apply each coat of paint at the rate specified by the manufacturer to achieve the minimum dry mil thickness required by the manufacturer. If material has thickness or must be diluted for application by spray gun, the coating shall be built up to the same film thickness achieved with undiluted material. In other words, one gallons of paint as originally furnished by the manufacturer must not cover a greater square foot area when applied by spray gun than when applied unthinned by brush. Deficiencies in film thickness shall be corrected by the application of additional coats of paints, on masonry, application rates will vary according to surface texture: however, in no case shall the manufacturer's rated coverage rate be exceeded. On porous surface, it shall be the painter's responsability to achieve a protective and decorative finish either decreasing the coverage rate or by applying additional coats of painting.

G. Inaccessible metal work. Metal surfaces which are to be in permanent contact with concrete or masonry, or embedded in masonry shall be given a coat of primer and two coats of asphalt varnish in the field before being made inaccessible. Other metal surfaces which will be inaccessible for painting in the finished work shall be painted two coats of the same material as the priming coat before being made inaccessible, and other finish painting of such surfaces will not be required. This does not apply to metal work with bituminous coatings applied in the shop or factory.

H. Pre-finished items. Equipment, such as motors, pumps and other such items, which, when installed, become an integral part of a system and which may be delivered fully factory-finished, that is, having finished coatings in addition to the prime coatings, shall be patch painted where damage, sanded to a dull gloss and then painted two coats of the specified finish material with colors to suit the area of installation as directed. The Engineer may, at his option, require that certain equipment not be painted.

I. Color scheme. A complete color scheme for the work will be furnished by the Engineer from standard color charts submitted by the contractor, except for standard color-coding required by the owner.

3.02 SCHEDULE

A. The room finish schedule shown in the Construction Drawings and the painting schedule included herein are intended to supplement each other, and together constitute one complete set of painting requirement, so that any work exhibited in one and not in other shall be executed just as if it had been set forth in both, in order that the work shall be completed in every respect.

B. PRASA Standard Color Code

These colors are included for the sole purpose of identifying facilities. The paint actually furnished must conform to the quality requirements specified hereinafter and must also match this color code.

1. Pipes

Raw water - Olive green
Settled or clarified water - Light blue
Treated or potable water - Dark blue
Alum - Orange
Chorine (gas, solution or liquid) - Yellow
Electrical conducts - Red
Fluoride - Light yellow with red stripe
Lime slurry - Light green
Potassium Permanganate - Violet
Polymer - Orange with green stripe
Sulfur dioxide - Light green with yellow stripe
Wash water - Light brown
Slime ("cieno") - Dark brown
Sanitary sewer - Dark gray
Compressed air & Vacuum Pipe - Dark green
Gas - Black
Other piping - Light gray

2. Equipment

Pumps, motors, belt, guards, unit drive mechanism, gear boxes ---------- gray
Motor control centers, control panels, bus duct and switchgear ---------- gray
Hydrants & Valve hand wheels ---------- red
Interior raw sewage pipe, valve bodies, shafting,
pumps, motors, gear boxes, machinery, etc. ---------- gray

C. Painting Schedule. The schedule of areas to be painted is as follows:

1. General

a) Imperfections and scratches on equipment not repainted shall be touched up with matching paint provided by the equipment manufacturer.

b) Where more than one coat of paint is required, the undercoats shall be a single lighter than succeeding coats to insure complete coverage.

c) Colors shall be as selected by the engineer.

d) Aluminum and stainless steel surfaces shall not be painted.

e) Apply one coat of metal primer, of the types specified, and one coat of flat black metal enamel, to the surfaces of all ductwork behind grilled, for a distance of 18 inches.

f) All pipes and other metals that have been dipped in tar of bituminous products shall receive two coats of copper. "Interior tar stop" or two coats of Themec "no. 707 tar bar" in place of the priming coat.

g) Back-prime with the specific interior first coat material, all surface of finish and trim which will be concealed after installation.

2. Masonry

Interior. Contractor shall paint the interior masonry wall and ceiling surfaces listed in the room schedule included in the Construction Drawings and those walls and ceiling surfaces indicated by Engineer.

3. Metal (except as excluded above)

Contractor shall paint all interior, exterior and submerged metal surfaces, including piping, machinery, lintels, equipment, and other miscellaneous items.

4. Plaster

All exposed plaster shall be painted as required.

5. Plastic (except as excluded above)

All exposed plastic pipe and miscellaneous plastic items shall be painted.

6. Wood (except as exclude above)

All interior and exterior wood surfaces shall be painted.

D. Paint system

Contractor shall follow the indications in this sections for the different materials.

1. Masonry and Concrete

a) Exterior concrete and masonry. One coat of primer and two coats exterior concrete and masonry paint, unless otherwise indicated.

b) Interior and exterior exposed concrete surfaces. Two coats of silicone fortified finish, unless otherwise indicated.

c) Interior concrete surfaces (except where indicated or directed to receive any other finish). Two coats interior concrete or masonry paint.

d) Interior hollow block masonry surface. One coat white concrete blocks filler, one gloss enamel and one coat spatter or solid color as required by Engineer.

e) Interior concrete and masonry surface (enamel finish). One coat enamel undercoated and one coat semi gloss enamel.

f) Toilet rooms, rest rooms, locker and dressing room, and shop areas. Walls to be finished with ceramic tile shall be given above the tile line, a waterproofing primer and two coats of enamel paint or a polyester and Epoxy resins paint.

2. Metals

a) Submerged or intermittently submerged ferrous metal surfaces. Contractor shall use the following products or approved equal:

1) Manufactured by Koppers

Primer: Pug Primer (shop or field), 1 coat 1.5 dry mils.

Field: Bitumastic No. 300-M-2 coats 8-10 dry mils per coat

2) Manufactured by Themec

Primer: 77 Chem-Prime (shop or field) 1 coat 1.5 dry mils

Field Up: 413 Tnemec - Tar-2 coats 8.3 dry mils per coat

b) Interior exposed ferrous metal surfaces. Contractor shall use the following products or approved equal:

1) Manufactured by Koppers

Shop or field primer: Pug primer -1 coat- 1.5 dry mils

Field touch up: Pug primer-1 coat- 1.5 dry mils

2) Manufactured by Tnemec

Shop or Field primer: 77 Chem prime 1 coat 2.1 dry ,mils

Field touch up: 77 Chem prime 1 coat 2.1 dry mils

Finish: Tnemec Tufcoat (series 18) 2 coat 1.3 dry mils per coat

c) Exterior exposed ferrous metal surfaces. Contractor shall use the following products or approved equal:

1) Manufactured by Koppers

Shop or field primer: Torex 820 primer-2 coats 1.2 dry mils per coat

Finish: Torex 800 Enamel 2 coats 1.0 dry mils per coat

2) Manufactured by Tnemec

Shop or field Primer:	77 Chem prime 2 coat 1.9 dry mils per coat.
Finish:	Chlorine (series 13) 2 coats 1.4 dry mils per coat

d) Non - ferrous and galvanized metal surfaces:

Contractor shall paint non-ferrous and galvanized metals surfaces as specified herein for ferrous metal surfaces after pre-treatment (see "Preparation of surfaces for shop/or field painting**").**

e) Submerged or intermittently-submerged galvanized metal surface:

Contractor shall paint as specified in this section for submerged or intermittently submerged metal surfaces.

3. Interior and exterior painted and stained wood surfaces

a) Interior mahogany. Contractor shall apply one coat of filler, one coat of stain when directed, and one coat of gloss varnish or two coats of satin varnish.

b) Other interior woodwork. Contractor shall apply one coat of enamel undercoated and two coats or semi- gloss enamel.

4. PVC Piping

a) Contractor shall apply two (2) coats of Koppers - Glamorglaze 1.75 dry mils per coat, PPG Aquapon 2 coats- 2.0 dry mils per coat, or approved equal.

E. Pipe identification markers

1. Pipe identification shall conform to the requirements of the Puerto Rico Ports Authority.

Pipe markers shall consist of plastic coated fabric "all temperature" labels as manufactured by the W.H. Brady company or Seton Name Plate Corporation or approved equal. They shall indicate the pipe contents in printed, blacks letters. Labels shall be of such length so as to completely circumscribe the pipe and overlap not less than one edge.

Flow markers shall consist of labels similar to the pipe markers with a large black arrow printed on the same background color to indicate the direction of flow of the pipe.

A pipe marker and a flow marker shall be placed on each pipe on each side of walls or floors through which the pipes pass. Such markers shall also be placed adjacent to valves and fittings and for exposed piping the markers shall be so located as to be clearly visible to a person standing on the floor.

On pipes one inch and smaller in diameter requiring identifying marking, a metal tag of not less than one inch in diameter, with lettering etched and filled with enamel, shall be attached in lieu of labels.

Concealed piping and ducts such as in shafts and over suspended ceilings shall be color-coded adjacent to valves an fittings an so to be clearly visible in the pipe shafts. Otherwise no color-coding is required for such lines.

3.03 FIELD QUALITY CONTROL

A. Clean-up and inspection. At the completion of the Painting work has been finished, but before its final acceptance, the Contractor shall carry out a thorough cleaning of the building, so that all paint spattering, stains, or spilling on floor (including all paint spots and oil of grease stains), walls, windows, doors, plumbing fixtures, hardware and equipment, etc., shall be removed.

B. Final Inspection. The contractor shall protect all painted surfaces against damage until the date of final acceptance of the work. The Engineer will conduct a final inspection of all work and the contractor will be required to repaint or retouch any areas found which do not comply with the requirements.

SECTION 104010
AAA SEAL AND LETTERING

PART 1. GENERAL

1.01 SUMMARY

1.01.1 SECTION INCLUDES

This section consists of molding on concrete the letters of AAA, the seal and the numbers indicating the year of construction; furnishing and installing the 18 inch diameter bronze seal of the Authority as specified herein.

PART 2. PRODUCTS

A. Letters. The letters shall be molded on concrete as shown in Figure 1. All letters shall be 0.20 meters tall, about 0.17 meters wide and 0.03 meters in depth.

B. Seal. The 18" diameter bronze AAA seal shall as shown in Figure 2. For detail information the Contractor shall contact the Engineer before ordering the manufacture of the seal.

C. Numbers. Four numbers shall be molded on the wall of the pumping station in the same manner and finish as the letters. The numbers shall indicate the year of the construction.

PART 3. EXECUTION

A. Contractor shall mold on concrete the letters of AAA seal and the numbers indicating the year of construction, furnish and install the 18 inch diameter bronze seal of the Authority as specified herein.

B. The Contractor shall follow the installation instructions from the manufacturer as previously approved by the Engineer.

Unless indicated otherwise by the Engineer the letters, the numbers and the seal shall be installed centralized in the indicated wall at the following heights:

1. Letters to be at 2.40 meters from finish floor to the base of the letters.

2. The center of the seal to be at 2.00 meters from finish floor.

3. The numbers to be at 1.50 meters from finish floor to the base of the numbers.

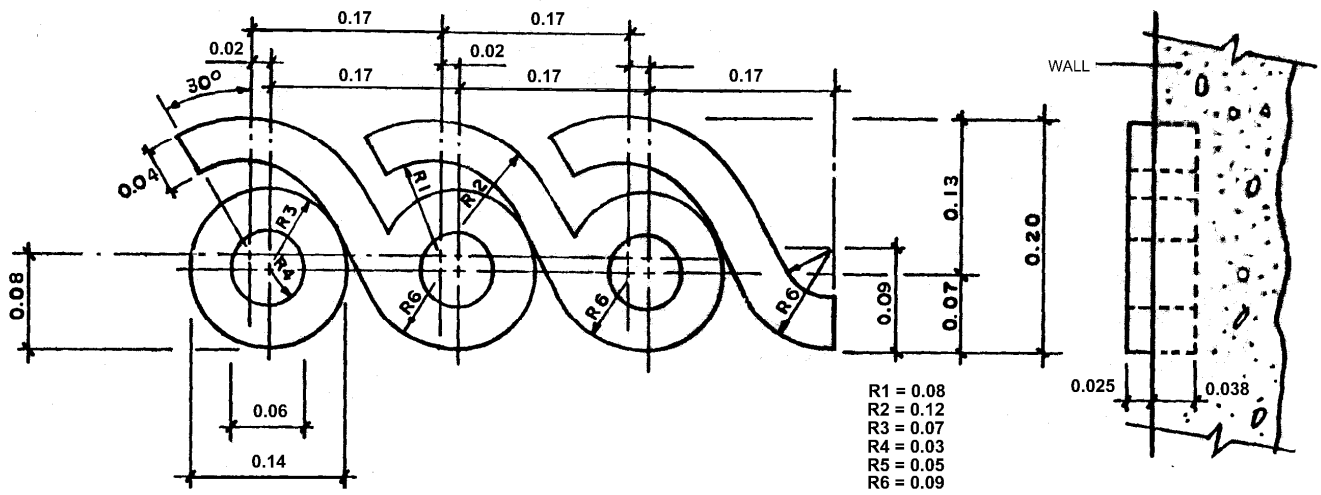

CONCRETE LETTER DETAIL

Figure 1. AAA letters to be constructed on all tanks and pump Stations. The year of construction must also be included.



Figure 2. AAA Seal to be installed on the main entrance exterior of main building in Waste Water Plants and Water Filtration Plants.

SECTION 104520
DETECTABLE MARKING TAPE
(TO BE USED ABOVE ALL WATER AND SANITARY PIPE

PART 1. GENERAL

1.01 SUMMARY

1.01.1 SECTION INCLUDES

A. This section includes furnishing and laying all detectable marking tape, to be used above all water pipe and all sanitary force main, and/or cross country as shown in the Construction Drawings or as directed by the Engineer including all other materials, labor, tools and appliances necessary to complete the work.

PART 2. PRODUCTS

A. Detectable marking tape shall consist of one 35 gauge layer of aluminum foil laminated between two layers of inert plastic film; top side to be polyester for strength and the underside to be a minimum of 2.5 polyethylene. The extrusion-laminated bond should be strong enough that the layers cannot be separated by hand. Tape shall have a minimum of 5 mils thick with a minimum tensile strength of 5,600 psi per 3 inches width strip. Tape shall be imprinted in both English and Spanish with a continuous warning message repeated every 16 to 36 inches. (See attached drawing). Tape shall be of three (3) inches width. Tape shall be blue color with black imprint for Aqueduct Systems. Tape shall be green color with black imprint for Sanitary Sewer Systems. Detectable marking tape shall be manufactured by Reef Industries, Inc., of Houston, Texas, Thor enterprises, Inc. of Sun Prairie, Wisconsin, or approved equal.

PART 3. EXECUTION

A. The Contractor furnish and lay all detectable marking tape, to be used above all water pipe and all sanitary force main, and/or cross country as shown in the Construction Drawings or as directed by the Engineer including all other materials, labor, tools and appliances necessary to complete the work.

B. Detectable marking tape shall be installed directly above and parallel to the pipelines and about 12 inches (0.30M) below the surface.

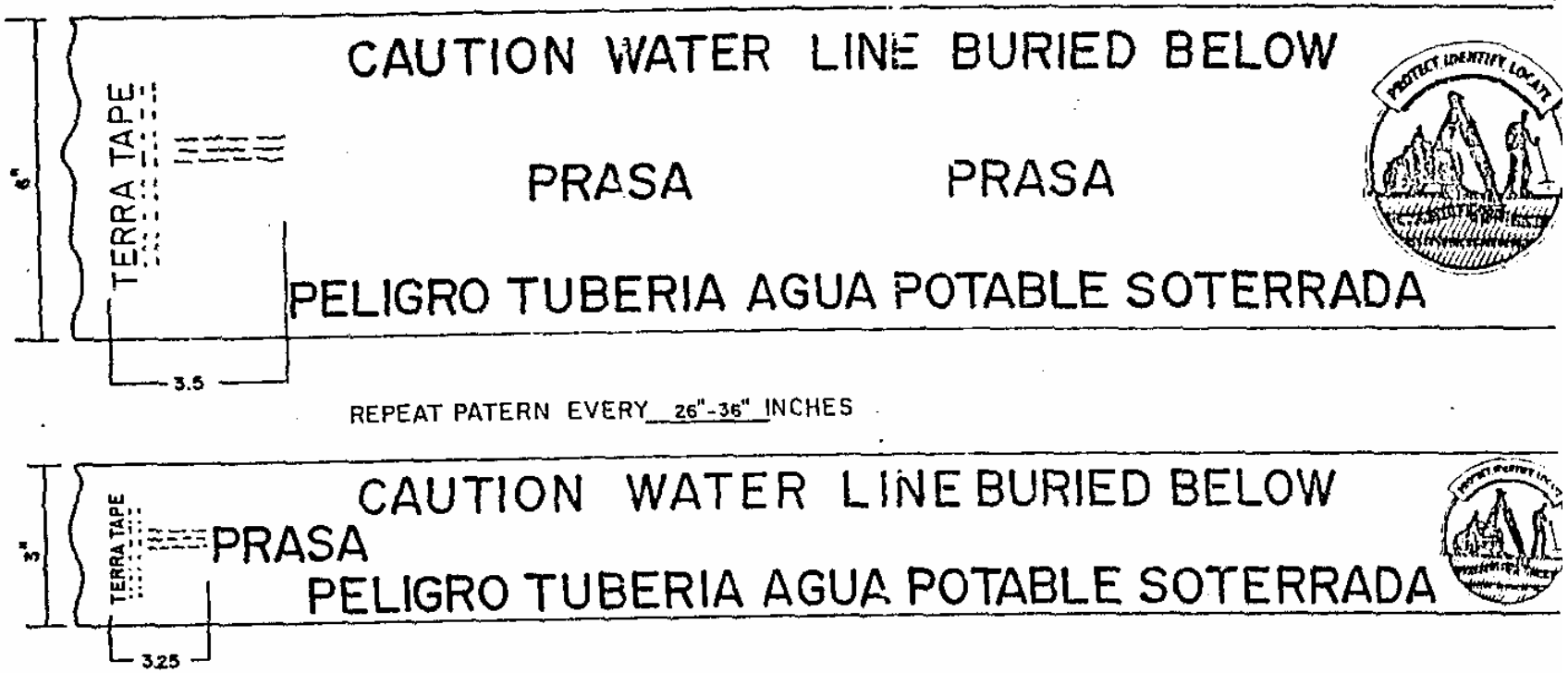

COLOR: BLUE

MATERIAL: ALUMINUM FOIL LAMINATED BETWEEN TWO LAYERS OF INERT PLASTIC FILM.

IMPRINT COLOR: BLACK

CUSTOMER: PRASA

SAN JUAN, P.R.

6"- 0521556

PRODUCT CODE 3" 0531556

SO: _____

NOT TO SCALE

TERRA TAPE

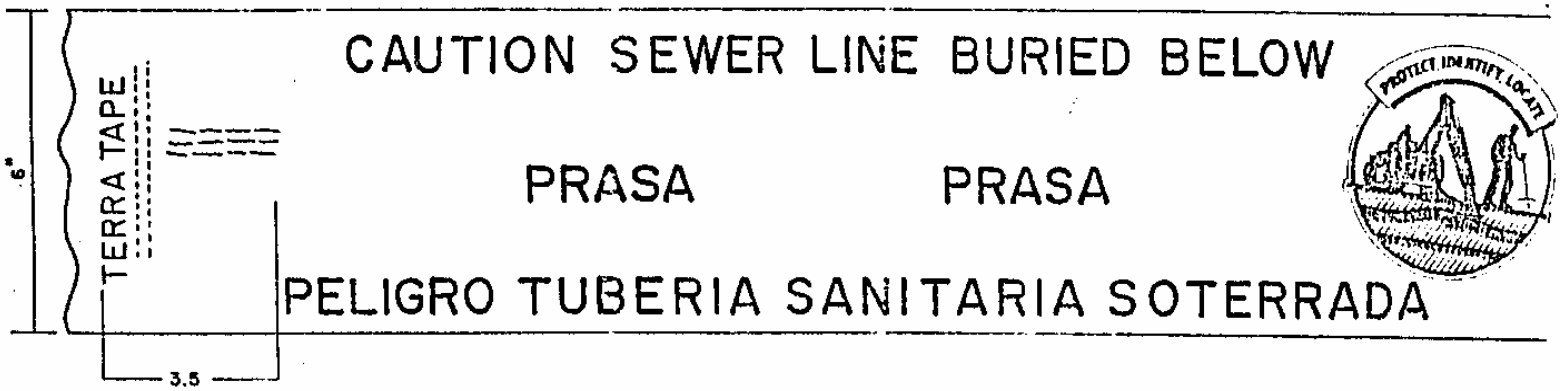

REPEAT PATERN EVERY 16"-36" INCHES

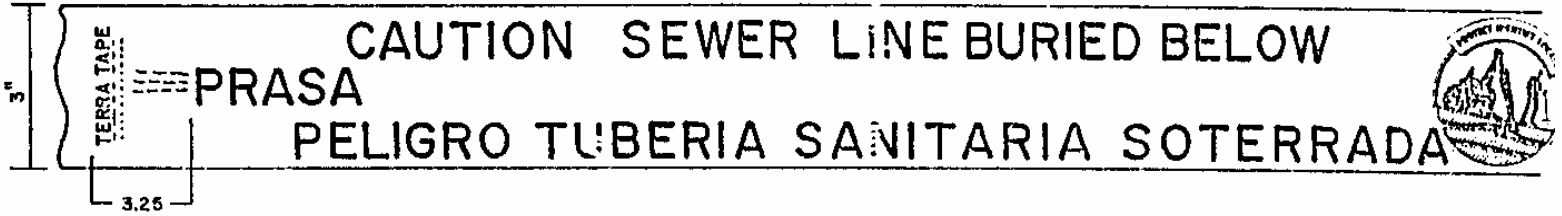

COLOR: GREEN

MATERIAL: ALUMINUM FOIL LAMINATED BETWEEN TWO LAYERS OF INERT PLASTIC FILM.

IMPRINT COLOR: BLACK

CUSTOMER: PRASA

SAN JUAN, P. R.

6" 0521556

PRODUCT CODE 3" 0531556

SO: _____

NOT TO SCALE

TERRA TAPE

SECTION 105210
PORTABLE FIRE PROTECTION EQUIPMENT

PART 1. GENERAL

1.01 SUMMARY

1.01.1 SECTION INCLUDES

A. Under this section Contractor provides all labor, materials, equipment and incidentals as shown, specified, and required to furnish and install portable fire extinguishers.

1.01.2 RELATED SECTIONS

A. Coordinate the installation of items that must be installed with the portable fire extinguishers.

1.02 SUBMITTALS

A. Shop Drawings: Submit for Approval the Following:

1. Copies of manufacturer's technical data, certification of UL rating, and installation instructions for all portable fire extinguishers required.

1.03 QUALITY ASSURANCE

A. Source Quality Control. Furnish portable fire extinguishers and accessories from only one manufacturer.

1.04 REFERENCES

A. Reference Standards. Comply with applicable provisions and recommendations of the following, except where otherwise shown or specified.

1. UL, Fire Classification Rating.

2. Código para la Prevención de Incendios de Puerto Rico, Departamento de Bomberos.

PART 2. PRODUCTS

A. General. Provide manufacturer's standard wheeled carriage or standard mounting bracket for portable fire extinguishers size as required.

B. The number of fire extinguishers to be provided and their locations is indicated in the schedule included in the Construction Drawings. If no schedule is included in the Construction Drawings it shall be as directed by the ENGINEER.

C. The types of portable fire extinguishers required include the following:

1. “Purple - K” dry chemical extinguishers.

2. Multi-purpose dry chemical extinguishers.

3. Carbon dioxide extinguishers.

D. Multi-Purpose Dry Chemical. (Type A)

1. 20 pound capacity, enameled steel container with pressure indicating gauge, for Class A, Class B and Class C fires, UL rating 80 BC.

2. Effective discharge time shall be 20 seconds minimum.

3. Product and Manufacturer. Provide one of the following:

a) Model SY-2034 as manufactured by Ansul Company.

b) Or approved equal.

E. Carbon Dioxide. (Type B)

1. 10 and 15 pound capacity, UL rating 10 BC.

2. Product and Manufacturer. Provide one of the following:

a) Sentinel Model 20 as manufactured by J.N. Johnson Company, Inc.

b) Model KS as manufactured by Walter Kidde and Company.

c) Or approved equal.

F. "Purple - K" Dry Chemical. (Type C)

1. 125 pound capacity, enameled steel container with pressure indicating gauge, for Class A, Class B, and Class C fires, UL rating 320 BC.

2. Effective discharge time shall be 49 seconds minimum.

3. Product and Manufacturer. Provide one of the following:

a) Model I-K-150-D as manufactured by Ansul Company.

b) Or approved equal.

4. Signs. Provide styrene, V-shaped signs.

a) Background: White.

b) Lettering: "FIRE EXTINGUISHER", red or black.

c) Symbol: Of fire extinguisher, red.

d) Size: 7 inches by 12 inches.

PART 3. EXECUTION

A. Contractor shall provide all labor, materials, equipment and incidentals as shown, specified, and required to furnish and install portable fire extinguishers.

B. Install wall mounted units in locations and at mounting of 3 feet-0 inches. Securely fasten to structure, square and plumb, in accordance with manufacturer's instructions.

C. Wherever exact locations of units are not clearly established, locate as directed by Engineer.

D. Install signs directly above portable fire extinguishers, securely mounted, attached to substrate in accordance with manufacturer's instructions. Install signs level and plumb.

E. Inform PRASA of next required inspection and recharging date.

SECTION 108010
TOILET PARTITIONS AND URINAL SCREENS

PART 1. GENERAL

1.01 SUMMARY

1.01.1 SECTION INCLUDES

A. Under this section the contractor shall furnish all labor, materials, equipment and incidentals required to provide toilet partitions and urinal screens as shown and specified.

B. The extent of the toilet partitions and urinal screens is shown in the Construction Drawings.

C. The types of toilet partitions and urinal screens required include the following:

1. Floor supported no headrail partitions.

2. Wall hung urinal screens.

1.02 REFERENCES

A. Comply with applicable provisions and recommendations of the following, except as otherwise shown or specified.

1. ANSI A117.1, Specifications for Making Buildings and Facilities Accessible to, and Usable by, the Physically Handicapped.

2. ASTM A164, Electrodeposited Coatings of Zinc and Steel.

3. ASTM A167, Stainless and Heat-Resisting Chromium Nickel Steel Plate, Sheet, and Strip.

1.03 SUBMITTALS

A. Shop Drawings: Submit for approval the following:

1. Shop Drawings for the fabrication and erection of toilet partition and urinal screen assemblies. Include plans and elevations at not less than 1 inch to 1 foot-0 inches scale. Show all anchorage and accessory items, and finishes. Provide location template drawings for bolt locations in supporting members.

2. Manufacturer's detailed technical information and installation instructions. Include catalog cuts of hardware, anchors, fastenings, complete color charts and other data as required. Indicate by transmittal form that copy of each instruction has been distributed to the installer.

1.04 DELIVERY, STORAGE, AND HANDLING

A. Delivery of Materials:

1. Deliver material in manufacturer's original unopened and undamaged packages.

2. Clearly identify manufacturer, brand name, contents, color stock number, and order number on each package.

3. Packages showing indications of damage that may affect condition of contents are not acceptable.

B. Storage of Materials: Store in original packaging under protective cover and protect from damage.

C. Handling of Materials: Handle materials in such manner as to prevent damage to products or finishes.

PART 2. PRODUCTS

2.01 MATERIALS

A. All panels, pilasters, and doors shall be constructed of a core of Douglas Fir Plywood, exterior grade, immersion treated, bonded under pressure with plastic resin adhesives to high pressure plastic laminate faces and edges not less than 0.06 inches thick, conforming to NEMA Standard LD-3.

B. Pilaster Shoes: ASTM A167, Type 302/304 stainless steel, as follows:

1. Height: 3-inches.

2. Thickness: Not less than 20 gage.

3. Finish: To match hardware.

C. Stirrup Brackets: Manufacturer's standard design for attaching panels to walls and pilasters, as follows:

1. Type 302-formed stainless steel.

D. Hardware and Accessories: Manufacturer's standard design, heavy duty operating hardware and accessories, as follows:

1. Stainless steel, with No. 4 bright directional polish finish.

E. Anchorages and Fasteners: Provide manufacturer's standard exposed fasteners of stainless steel or brass, with finish to match hardware. Use theft resistant, one-way, type heads and nuts for exposed anchorages.

1. For concealed anchors use hot dip galvanized steel items.

2.02 FABRICATION

A. General. Provide standard doors, panels, screens, and pilasters fabricated for the partition system, unless otherwise as shown or specified. Pressure laminate face sheets to core material with edges sealed with a continuous locking strip or lapping and formed edges.

1. Provide concealed reinforcement for installation of hardware, fittings, brackets, and required accessories.

B. Panel and Door Dimensions. Not less than 1-inch thick units. Provide 32-inch wide, swing out doors in wheelchair stalls, in accordance with ANSI A117.1.

C. Floor Supported Pilasters. Not less than 1-1/4-inch thick units, with galvanized steel anchorage devices for securing to the floor. Furnish anchorage devices complete with threaded rods, lock washers, and leveling adjustment nuts. Provide shoes at each pilaster.

1. Product and Manufacturer: Provide one of the following:

   a) Bayport by Accurate Partition Corporation.

   b) New Yorker by Knickerbocker Partition.

   c) Or equal.

D. Wall Hung Urinal Screens. Not less than 1-inch thick panel units, size as shown or specified, of same construction and finish as doors and panels. Provide extra heavy stirrups for securing to walls.

1. Product and Manufacturer: Provide one of the following:

   a) Type A by Accurate Partitions Corporation.

   b) Model HW Knickerbocker Partitions.

   c) Or equal .

2.03 ACCESSORIES

A. Provide for each door in the partition system, as follows:

1. **Hinges.** Cutout inset type, adjustable to hold door open at any angle up to 90 degrees. Provide spring-action cam type, to comply with manufacturer's recommendations.

2. **Latch and Keeper.** Recessed latch unit, with combination rubber faced door strike and keeper. Provide latch unit, which has capabilities for emergency access.

3. **Coat Hook.** Manufacturer's standard unit.

4. **Door Pulls.** Manufacturer's standard unit.

5. **Toilet Paper Holder.** Manufacturer's standard unit.

6. **Reinforcing.** Reinforce internally partitions receiving grab bars.

2.04 SOURCE QUALITY CONTROL

2.04.1 TESTS, INSPECTION

A. Take field measurements prior to preparation of Shop Drawings and fabrication, where possible, to ensure proper fitting of Work. However, do not delay job progress; allow for trimming and fitting wherever the taking of field measurements before fabrication might delay the Work.

B. Pre-assemble items in the shop to the greatest extent possible. Disassemble units only to the extent necessary for shipping and handling limitations. Clearly mark units for re-assembly and coordinated installation.

PART 3. EXECUTION

A. Contractor shall furnish all labor, materials, equipment and incidentals required to provide toilet partitions and urinal screens as shown and specified.

1. The extent of the toilet partitions and uri1nal screens is shown in the Construction Drawings.

2. The types of toilet partitions and urinal screens required include the following:

a) Floor supported no headrail partitions.

b) Wall hung urinal screens.

3. Coordination. Furnish inserts and anchoring devices, which must be built into masonry for the installation of toilet partitions and related work. Provide setting drawings, templates, instructions and directions for installation of anchorage devices. Coordinate delivery with other work to avoid delay. See concrete and masonry sections of these Specifications for installation of inserts and anchorage devices.

B. The contractor and his installer must examine the areas and conditions under which toilet partitions and related items are to be installed. Notify the ENGINEER in writing of conditions detrimental to the proper and timely completion on the Work. Do pot proceed with the Work until unsatisfactory conditions have been corrected in an acceptable manner to the ENGINEER.

3.02 INSTALLATION

A. General. Install partitions rigid, straight, plumb and level, with the panels laid out as shown. Provide clearances of not more than 1/2 inch between pilasters and panels, and not more than 1 inch between panels and walls. Secure panels to walls with not less than two stirrup brackets attached near top and bottom of the panel. Locate wall brackets so that holes for wall anchorages occur in masonry or joints. Secure panels to supporting walls with manufacturer's recommended anchoring devices, as shown on final Shop Drawings or in manufacturer's instructions.

B. Floor Supported Partitions. Secure pilasters to, the supporting floor system with the specified anchorage device. Level, plumb and tighten the installation with the leveling device. Set tops of

doors level with the tops of pilasters when the doors are in the closed position. Set pilaster units with anchorages having not less than 2-inch penetration into the supporting floor system.

C. Hardware Adjustments. Adjust and lubricate hardware for proper operation after installation.

1. Set hinges on inswing doors to hold doors open approximately 30 degrees from closed position when unlatched.

2. Set hinges on outswing doors and entrance swing doors, if any, to return to the fully closed position.

D. Wall Mounted Screens. Attach with heavy duty concealed anchoring devices, including wall channels, wall plates and studs as recommended by the manufacturer to suit the supporting wall construction. Set units in accordance with the manufacturer's instructions to provide support for the units and to resist lateral impact.

E. Perform all final adjustments to pilaster leveling devices, door hardware, and other operating parts of the partition assembly just prior to final inspection.

F. Clean exposed surfaces of partitions, hardware, fittings and accessories and touch up minor scratches and other finish imperfections using materials and methods recommended by the partition manufacturer.

Protect units during delivery, storage, and after erection so that there will be no indication of use or damage at the time of Final Acceptance. Replace damaged Work as directed.

SECTION 108012
TOILET ROOMS ACCESORIES

PART 1. GENERAL

1.01 SUMMARY

1.01.1 SECTION INCLUDES

A. This section includes all labor, materials, equipment and incidentals required to furnish and install all toilet room accessories.

1.01.2 RELATED SECTIONS

A. Documents affecting work of this Section include, but are not necessarily limited to, General Conditions, Supplementary Conditions, and other specification sections.

1.02 QUALITY ASSURANCE

A. Use adequate numbers of skilled workmen who are thoroughly trained and experienced in the necessary crafts and who are completely familiar with the specified requirements and the methods needed for proper performance of the work of this Section.

PART 2. PRODUCTS AND EXECUTION

A. Contractor shall furnish and install toilet room accessories such as, but not limited to:

a) Mirrors.

b) Accessories to dispense sanitary toilet paper near each toilet.

c) Accessories to dispense sanitary napkins near each toilet and near each bidet.

d) Accessories to dispense soap near each lavatory.

e) Accessories to dispense sanitary toilet paper used to cover the toilet near each toilet.

f) Other

B. Provide the number of toilet room accessories in the location indicated in the Construction Drawings. If these are not indicated in the Construction Drawings, Contractor shall provide as required by Engineer.

C. Contractor shall provide other materials and apparatus not specifically described but required for a complete and proper installation, as selected by the Contractor subject to the approval of the Engineer.

1. Accessories shall be as produced by Bobrick Washroom Equipment Company, American Standard, or approved equal.

2. Accesories shall be industrial quality and shall be approved in advance by the Engineer.

D. Examine the areas and conditions under which work of this Section will be performed. Correct conditions detrimental to timely and proper completion of the Work. Do not proceed until unsatisfactory conditions are corrected.

E. Coordinate as required with other trades to assure proper and adequate provision in the work of those trades for interface with the work of this Section.

F. Install each item in its proper location firmly anchored into position, level and plumb, and in accordance with the manufacturer's recommendations.

SECTION 116020
EMERGENCY BREATHING EQUIPMENT

PART 1. GENERAL

1.01 SUMMARY

1.01.1 SECTION INCLUDES

The Contractor shall provide all labor, materials, equipment and incidentals as shown, specified, and required to furnish and install emergency breathing equipment.

1.02 SUBMITTALS

A. Shop Drawings. Submit for approval the following:

1. Manufacturer's literature, illustrations, specifications, and engineering data including dimensions and materials of construction.

2. List of accessories furnished.

3. Deviations from specifications.

B. Operation and Maintenance Manual. Submit complete installation, operation and maintenance manuals, including maintenance data and schedules, description of operation, and spare parts information.

PART 2. PRODUCT

2.01 MANUFACTURERS

A. Type. Portable self-contained air breathing units.

B. Provide equipment of one of the following:

1. Scott Air Pak IIa

2. Globe Safety Products

3. Or approved equal

C. Number Required: One at every room whrer toxic gases are handled including storage, application and others. Contractor shall furnish and install at least one unit at every sewer pump station, at every sludge handling building, and at every room where chlorine is stored or applied. Contractor shall furnish and install one additional unit at the main builidng of every wastewater or clearwater treatment plant.

D. Features:

a) Mask: Limitless vision, anti-fogging, suitable for use by persons wearing eyeglasses.

b) Air Supply:

1) Refillable aluminum compressed air tank.

2) Rated Duration: 30 minutes at moderate exertion

3) Cylinder Capacity: 45 cubic feet of breathing air compressed to 2,216 psi.

4) Alarm: Automatic to indicate low air supply.

c) Shoulder Harness.

d) Air regulator.

e) Provide spare cylinder of same capacity indicated above.

f) Approved by U.S. Bureau of Mines.

g) Cabinet:

1) Enclosure: NEMA 12

2) Size: To hold 2 tank type masks

3) Handle fitted for padlock

4) Wall mounting brackets

5) Shall be suitable for padlock

PART 3. EXECUTION

A. The Contractor shall provide all labor, materials, equipment and incidentals as shown, specified, and required to furnish and install the emergency breathing equipment specified.

SECTION 116030
FIRST AID EQUIPMENT

PART 1. GENERAL

1.01 SUMMARY

1.01.1 SECTION INCLUDES

A. This section includes all labor, materials, equipment and incidentals required to furnish and install first aid equipment at every the locations indicated.

B. Included, but not limited to, are the following components:

1. First aid kit.

2. Emergency oxygen kits.

3. Folding pole stretcher and utility blanket kit.

4. Emergency burn relief kit.

1.01.2 SUBMITTALS

A. Shop Drawings. Submit for approval the following:

1. Manufacturer's detailed data sheets.

1.01.3 REFERENCES

A. Reference Standards. Comply with applicable provisions and recommendations unless otherwise shown or specified:

1. Occupational Safety and Health Act.

PART 2. PRODUCTS

2.01 MATERIALS

A. Industrial First Aid Kit

1. Product and Manufacturer: Provide the following:

a) Industrial First Aid Kit Number 50 by Johnson & Johnson Incorporated.

b) 36 Unit by Figgie International Incorporated, Fire Protection/Safety Group, Scott Aviation Division.

c) Or approved equal.

2. Quantity: As required below under Location.

3. Description: Unit shall consist of a balanced assortment of first aid supplies adequate to administer first aid for up to 50 people. Provide 24 gage steel, weatherproof, dust-proof, rust resistant case with rounded corners with carrying handle and wall brackets.

4. Location: One on each building of the project. Buildings include pump stations, sludge handling stations, administration builidngs and others.

B. Folding Pole Stretcher and Utility Blanket First Aid Kit.

1. Product and Manufacturer: Provide the following:

a) Emergency Stretcher/Utility Blanket Kit by Fern-Washington Incorporated.

b) Or approved equal.

2. Quantity: As required below under Location.

3. Description: Unit shall consist of a collapsible emergency stretcher, 62-inch by 80-inch utility blanket and industrial first aid kit all housed in an anodized aluminum 24-7/8-inch by 40-1/4-inch by 10-inch wall mounted cabinet.

4. Location: Provide one kit on the main building of each wastewater and clearwater treatment plant.

C. Emergency Burn Relief Kit: Provide the following

1. Product and Manufacturer: Provide one of the following:

a) P/N 70495-00 by Figgie International Incorporated, Fire Protection/Safety Group, Scott Aviation Division.

b) Or equal.

2. Quantity: As required below under Location.

3. Description: Unit shall consist of 6 yards of 4-inch gauze bandage, 24-inch by 72-inch gauze compress and 4 ounce aerosol can of benzocaine. Provide all items contained within a 24-gage steel, waterproof, dust-proof, rust-resistant case with rounded corners and hanger brackets for wall mounting.

4. Location: Provide one kit on the main building of each wastewater and clearwater treatment plant.

D. Furnish as complete first aid equipment produced by one manufacturer, including hardware, accessory items, mounting brackets, and fastenings.

PART 3. EXECUTION

A. Contractor shall provide all labor, materials, equipment and incidentals required to furnish and install the first aid equipment described herein.

B. Install first aid equipment in accordance with the manufacturer's instructions. Position units plumb and true, securely anchored in place with proper clips, bracket and bolt for the type of mounting required. Specific location shall be as directed by Engineer.

SECTION 134010
INTEGRATED AUTOMATION REQUIREMENTS

PART 1. GENERAL

1.1. DESCRIPTION

A. Scope:
   1. Contractor shall provide all labor, materials, equipment and incidentals as shown, specified and required to furnish, install, test, Owner training, and place in satisfactory operation a complete integrated automation.

B. The scope of this contract includes the following major elements:
   1. Operator Interface Terminal (OIT)
   2. Software required for interfacing different systems to provide one fully integrated system.
   3. Monitor normal power source status in the control panel (i.e., loss of 120-volt ac power to the panel) and incorporate into system controls

C. As part of PRASA IT software requirements the contractor shall complete the Software Development Life Cycle (SDLC). At least the contractor must comply with the following phases:
   A. Documentation
   B. Development
   C. Validation or testing
   D. Training
   E. Implementation

D. CONTRACTOR shall complete and deliver the detailed control system design document which includes:

   1. Functional Specification - It describes specific features and characteristics of the computerized system. It shall include at least but is not limited to the following:

      - Description of the interfaces.
      - Identifies database characteristics.
      - Establishes design constraints and performance characteristics.
      - Defines parameters and characteristics of performance under which the system should operate.
      - Security considerations.
      - Communication tools necessary to control the process.
      - Data flow diagrams and data definitions.

2. Detailed Design Software and Integration Specification. - It is created to define the system operation. It shall include at least but is not limited to the following:

    - Hardware

    - Software
        - Network Description
        - Control System Description
        - I/O inputs list with address, description, range and calibration
        - The Screens Layout
        - Process Functionality
        - Modes of operation
        - Control Loops function and Description
        - PID Controllers
        - Process Interlocks
        - Security
        - Power Consumption

E. Those documents will require approval from Owner Representative and PRASA IT. Do not proceed without approvals.

F. As part of the SDLC the SCADA software developer shall deliver an application user manual. This document shall include instructions covering use and operation of the control system equipment to perform the intended functions.

G. The validation protocol should describe the testing plan to be followed for establishing documented evidence that the computer system does what is proposed to do. It shall include at least but is not limited to the following:

    - Cover Page
    - Scope
    - Applicable / Reference Documents
    - System description as installed
    - Testing procedures to be used
    - Acceptance Criteria

H. In order to centralize responsibility, it is required that all equipment provided under this Section be furnished by a single system supplier as specified in Article 1.3, below. Contractor shall guarantee and be the source of information on all equipment, materials, and appurtenances furnished regardless of the manufacturing and supply source of the equipment.

I. Any changes in the SCADA application identified after the development, during the validation/testing process or prior to the implementation in production environment should be updated in the Detailed Design Software Integration Specification and Functional Specifications.

J. SCADA application developer is responsible to re-use any templates available in the PRASA SCADA application.

K. Any omission of details in this specification or its attachment shall not relieve the Contractor of his obligation to furnish a system which is complete and operable in a satisfactory manner per the Contractor's and Owner's standard practices and as explicitly stated in this specification and the construction drawings.

L. In the event of conflict between requirements, the Contractor shall request the Engineer for clarification in writing.

M. If any departures from this specification are deemed necessary by the Contractor, details of such departure and reasons therefore shall be submitted for approval as soon as practicable to the Engineer. No such departure shall be made without the prior written approval of the Owner contract manager.

1.2. REFERENCES

A. Standards referenced in this Section are listed below:
1. American National Standards Institute, (ANSI).
2. American Water Works Association, (AWWA).
3. Environmental Protection Agency, (EPA).
4. Institute of Electrical and Electronic Engineers, (IEEE).
5. The Instrumentation, Systems and Automation Society, (ISA).
6. National Electrical Code, (NEC).
7. National Electrical Manufacturers' Association, (NEMA).
8. National Fire Protection Association, (NFPA).
9. Underwriters Laboratories, Incorporated, (UL).
10. PRASA Automation Project HMI Standard (HMIAP)

1.3. QUALITY ASSURANCE

A. General:
1. All equipment, components and materials required shall be furnished by a single Supplier who shall assume the responsibility for adequacy and performance of all items.
2. The Supplier shall provide products from a single manufacturer to the maximum extent possible.
3. The Supplier shall supply his company's Quality Assurance Plan (QA), and for components which are not of his manufacture, the component manufacturer's Quality Assurance Plan.

B. Supplier's Qualifications:
1. Shall be a financially sound firm having at least five (2) years continuous experience in designing, implementing, supplying and supporting integrated automation systems for municipal wastewater and water treatment facilities which are comparable to the Project in terms of hardware, software, cost and complexity.
2. Shall have a demonstrated experience record of successful instrumentation and control system equipment installations.

3. Shall have in existence at the time of bid opening, an experienced engineering and technical staff capable of designing, supplying, implementing and supporting the integrated automation system and handling the submittal and training requirements.
4. Shall be capable of providing training for Owner's personnel in process control applications and in operation, programming and maintenance of the control system and OIT.
5. Shall maintain a fully qualified service facility to provide service support.
6. Warranty: During 1 year, the Supplier shall guarantee timely response to all service calls (on-Site within 24 hours to correct all critical failures, within 72 hours to correct all non-critical failures and problems). Incurred expense for this service, inclusive of the cost of all materials and replacement parts, shall be borne by Contractor. Critical failures make reference to failures that may cause that any treatment unit be out of service.
7. Shall have an Underwriter's Laboratory (UL), Inc. approved panel shop.

C. Supplier's Responsibilities:
   1. Contractor shall retain the Supplier to assume the responsibilities specified below. However, execution of these specified duties by the system Supplier shall not relieve Contractor of the ultimate responsibility for providing a fully functional integrated automation system that meets all the requirements specified.
      a. Proper interfacing of the instrumentation and control equipment with field equipment, instruments, devices and panels, including required interfacing with package control systems furnished by other equipment suppliers and with the plant electrical system.
      b. Direct, detailed supervision of the installation of the OIT and other components.
      c. Testing and start-up of the integrated automated system.
      d. Handling of all warranty obligations for the integrated automation system components.
      e. Training of Owner's personnel in operation and maintenance of the integrated automation system.
   2. In the case an existing OIT, Contractor shall be responsible to update the current hardware and software as specified herein. The Contractor shall warrantee that the existing integration is not affected with the new hardware, software, and integration.

D. Provide only new, standard, first-grade materials throughout, conforming to standards established by Underwriter's Laboratories (UL), Inc., and so marked or labeled, together with Manufacturer's brand or trademark.

1.4. SUBMITTALS

A. Supplier Approval:
   1. General:
      a. Supplier qualifications shall be submitted with Bidder's submittal.
      b. Qualification submitted shall show, explicitly, that the Supplier has the organization and facilities to comply with Paragraph 1.3.B., above.
      c. The detailed presentation of the proposed Supplier's qualifications shall conform to Paragraph 1.3.B., above.

2. Quality Control Submittals:

    a. Software:
        1) Licensing agreement with name of licensee, renewal requirements, release and versions, expiration dates (if any) and any upcoming releases scheduled before project completion. In the case of upcoming releases, provide descriptions of the features that differ from the proposed release.
        2) Manufacture's Certificate of Proper Installation.
        3) Supervisory Control and Data Acquisition (SCADA) application developer must be Wonderware certified (provide certification). This application shall not be copyrighted.
        4) SCADA application validation/testing protocol, Standard technical and instructional documentation covering software for utility, system support, system documentation, display, communications, data logging and storage and diagnostic functions. This information shall be provided updated with the last changes and delivered via electronic media

1.5. GENERAL DESIGN REQUIREMENTS

A. Power Supplies:
    1. All electrically powered equipment and devices shall be suitable for operation on 115 volt, ±10 percent, 60 Hz, ±2 Hz power. If a different voltage or closer regulation is required, a suitable regulator or transformer shall be provided at no additional cost to the Owner.

B. Surge Protection Requirements:
    1. Surge protection shall be provided to protect the integrated automation system from surges propagating along the signal and power supply lines. The protection systems shall be such that the protection level shall not interfere with normal operation, but shall be lower than the OIT surge withstand level, and be maintenance free and self-restoring.

C. Miscellaneous:
    1. All panel mounted OIT, if applicable, shall be arranged ergonomically for functional use and ease of maintenance. All similar types of panel mounted devices shall be of the same manufacturer and model line.

1.6. STORAGE AND HANDLING

A. Each manufacturer or supplier shall package all hardware to protect against shipping damage, dust, moisture, and atmospheric contaminants. Include a shipping label which contains the following information:
    1. Tag number, equipment number and description.
    2. Instructions for unloading transporting, storing and handling at the Site.

B. Receive integrated automation components at the Site. Inspect all components for damage in shipment. Contractor is responsible for replacement of all damaged hardware. Repair of damaged equipment by the Contractor and acceptance of that equipment shall be at the discretion of the Engineer.

C. Do not store hardware out-of-doors. Store hardware in dry, temperature controlled permanent storage facilities that meet the environmental requirements of the hardware and pay storage costs.

D. PRODUCTS

1.7. PANELS

A. CONTROL PANEL
   1. Conform to NEMA ratings as specified in individual equipment sections.
   2. Minimum Metal Thickness: 14 gauge.
   3. NEMA 250, Type 4X Panels: Type 316 stainless steel construction.
   4. Doors:
      a. Three-point latching mechanisms in accordance with NEMA 250, Type 1 and 12 panels with doors higher than 18 inches.
      b. For other doors, stainless steel quick release clamps.
      c. Lockable
   5. Cutouts shall be cut, punched, or drilled and finished smoothly with rounded edges.
   6. Access: Front, suitable for installation with back and sides adjacent to or in contact with other surfaces, unless otherwise specified.
   7. Temperature Control:
      a. Size panels to adequately dissipate heat generated by equipment mounted on or in the panel.
      b. Furnish cooling fans with air filters if required to dissipate heat.
   8. Lighting: Minimum of one hand switch controlled internal 100 watt incandescent light for panels 12 cubic feet and larger.
   9. Minimum of one 120 volt duplex receptacle for panels 12 cubic feet and larger.
   10. Finish:
      a. Metallic External Surfaces (Excluding Aluminum and Stainless Steel): Manufacturer's standard gray unless otherwise specified.
      b. Internal Surfaces: White enamel.
   11. Panel Manufacturers:
      a. Hoffman.
      b. Rittal.
      c. Or Approved Equal
   12. Breather and Drains: Furnish with NEMA 250, Type 4X panels.
      a. Manufacturer and Product: Crouse-Hinds; Model ECD18, or approved equal.

1.8. OPERATOR UNITERFACE TERMINAL

A. Acceptable Real-Time Monitoring and Control (RTMC) Software Packages. Wonderware – InTouch for System Platform with Historical Client (Archestra Platform).
B. RTMC Applications Programming
   1. General. Do RTMC application programming work in collaboration with Owner’s Representative and PRASA IT SCADA System Representative. The general standards in this article are intended to provide a consistent approach for all projects.
   2. All SCADA definitions shall be confirmed with PRASA IT prior start any development.

3. SCADA application programming should be in accordance with PRASA IT standards.
4. SCADA application developer must provide all required software licenses during the application development.
5. SCADA application developer must make sure the current workstation operating system and application software's versions are the current used by PRASA IT.
6. System integration shall be designed to meet the PRASA requirements using the Archestra Platform for Remote Telemetric Monitoring. Objects design specifications should be delivered to PRASA IT for final approval.
7. PRASA IT department will be responsible of the deployment in production environment with contractor assistance.
8. PRASA IT is responsible to provide application software license under the production environment.
9. PRASA IT is responsible to provide a network communication line (PRASA Telemetry Network). Shall be provided for communication with the Barbosa Building Server.
10. Programmable Logic Controller (PLC) I/O. Organize PLC I/O by data type [floating point, integer, bits, etc.]. Use PLC data structures and RTMC I/O capabilities to organize data transfer operations for ease of modification and expansion.
11. Control Functions and Calculations. Perform all control functions and calculations in the PLC. This includes calculations like runtime, flow totalizers and control limits parameters. Alarms can be configured thru the SCADA application. Provide for easy operator viewing and entry of operator adjustable parameters in human sensible units. Where operations procedures require it, include security protection to only accept changes from those authorized to do so.
12. General Graphics Characteristics. Present text in English. Effectively use RTMC software features to provide pleasing appearance and user-friendly interaction were used. Use graphic representations of equipment and piping. Use symbols from symbol libraries where practical. Select or develop graphic symbols to clearly differentiate similar equipment types. Only use "3d" presentation where a "2d" approach cannot adequately present process operation, equipment status and function. Minimize depiction of extraneous static objects not associated with the process. Only include equipment identification number or names to distinguish between a numbers of parallel equipment items. Use only the minimum text required to identify each item. For example, label a pump known as number 3 with a "3." on the graphic.
13. Analog Values. Depict analog values graphically wherever appropriate; for example, a tank level. However, avoid the use of gauges where graphic space is limited; text is the preferred method of representation in these cases. Always supplement graphical depictions with text values. Include units adjacent to text indications. An alarm shall be configured for each analog value at the Human – Machine Interface (HMI) software. Where several related analog variables are located on a single display, display them as a vertically aligned set; for example, process value and setpoint on a Process Identifier (PID) controller.
14. Alarm Summary Windows On most graphics, include an alarm summary window listing recent system or plant-wide alarm occurrences. Display alarm points relevant to each graphic are continuously, even when out of alarm. Group these points into a block which looks like an annunciator box. Use dynamic coloring for individual point blocks to indicate status. Where the number of annunciator points for a display is too large for inclusion on the display, provide a target for accessing a separate annunciator box graphic. Dynamically color the target to indicate the presence of alarms.

15. Real Time Trends. Provide real time trends for all PID control loops and chemical composition measurements. Link values displayed on the real time trends to trend blocks so that real time trends are immediately displayed when the graphic is opened.
16. Graphics Resolution. Develop graphics using 1024 by 768 pixel resolution and 256 colors.
17. Targets. Targets will serve as the primary operator interaction with the RTMC system. On each graphic screen, provide selectable targets to invoke all operator actions. Selectable means that the area can be pointed to with the mouse and "picked" by pressing the left mouse button. By selecting a target, the operator will be telling the RTMC system to perform the associated [selected] action. All required target actions fall into one of the two following categories:
    i. Display branching (vector) target. When selected, a display branching target causes another display to appear. The display which appears is related to the target's graphical representation (text, equipment symbol, etc.).
    ii. Equipment control target. When selected, an equipment control target causes a pop up control screen to appear that enables the operator to place the equipment in manual or auto, start or stop equipment, change a setpoint, or otherwise change the equipment status.
18. Graphics Hierarchy. Arrange graphic displays in a hierarchy. Levels in the hierarchy are system-wide, plant-wide, unit process or pop up (equipment control) graphics.
19. Navigation between Graphics. Navigation between graphics will be achieved by selecting display branching targets on graphics. Provide for LAST screen relative navigation. Provide the following three types of display branching targets: pushbuttons, equipment symbols and flowstream connectors. Place flowstream connectors on graphics where a flow “enters” or “leaves” a graphic and the source or destination is depicted on another graphic. Use pushbutton targets to provide quick access to related graphics. These pushbuttons should be included in the graphic template.
20. Equipment Control. Equipment control will be a two-step process. A pushbutton serves as the target. Selection of the target will cause a control pop up window to appear. The equipment control pop up window will contain control targets (start/stop buttons, setpoint adjustment targets, etc.) which can be selected to perform the desired action. After selection of the control target, the operator will be prompted to confirm that the requested control action is to be executed. Displays, Files, Disk Locations and Naming.
21. Graphic Display File Names. Use process graphic file names composed of a facility code followed by an underscore character followed by the process code and the standard graphic display extension. Use file names consistent with the Instrumentation and Control Loop Tagging System article of these criteria.
22. Specific Graphic Displays. Provide the following graphic displays for each project: Water or Wastewater System Geographic Overview, Alarm Summary, Communications Status/Diagnostic Summary, Historical Display Overview, Distribution or Collection System Overview, and Phone List. For each plant provide the following additional displays: Plant Overview, Plant Status, Process Diagram System, Alarm Summary, Trends, Electrical Distribution, and Unit Process displays for each unit process and remote facility. Geographic Overview Display. On the geographic overview include major highways and streets and provide dynamic links [targets] for monitored facilities. Selecting a link will bring up the facility overview graphic.

23. Fonts and Colors. Object colors and features for all strategic projects will be standardized to provide uniform appearance. Pipeline colors will be static and coded to represent the process fluid normally contained within. Symbols for equipment which is monitored or controlled will be animated to change appearance to illustrate process conditions. Text messages adjacent to animated symbols will be used as necessary to further clarify process conditions.
24. Rapid Application Development Tools. Fully utilize rapid application development tools [Wizards and scripting for example] to ease application development and maintenance. Utilize object already develop by PRASA.
25. Database Conventions. Database record [point] and function naming conventions and standards. Variable [record], facility, instrument and equipment names shall be consistent with the Instrumentation and Control Loop Tagging System article of these criteria.
26. Alarming and Messaging. Log all alarms and events to alarm and event summary files and to the alarm printer. Events are normal [expected] status changes such as operator log on, setpoint change and automatic equipment cycling. Annunciate alarms visually and audibly. For selected alarms initiate the automated operator paging system. Work with the owner representative during design to develop operator paging conventions and standards.
27. Trending shall provide historical trending in accordance with the RTMC Software Monitoring and Control Functions article.
28. Manual Data Entry and Reporting. In general, provide graphic displays for manual entry of operator conducted analysis. Provide control developed visual studio connecting to Microsoft's SQL Server for editing and approving manually entered data from operator and remote Workstations.
29. Security. Security matrix and assignments in accordance with article RTMC Security.

C. Operator workstations shall be touch panel computer and/or approved desktop
   1. Two operator workstations is required for redundancy purposes (if required)
   2. Operating Speed: Intel Core i5 3.20 GHz, minimum
   3. Random Access Memory (RAM): 8GB minimum
   4. Hard Drive: Qty. 1 Disk , 500 GB minimum (1 Backup image not connected)
   5. 16 MB Network: Ethernet ready [10/100 Mbps]
   6. Embedded Monitor: Monitors 1024 x 768 pixels, 15 inches diagonal minimum
   7. Acceptable manufacturers for workstations: Wonderware or approved equal
   8. Operating System Software: At least Windows 7 Professional SP 1. Contractor must make sure using the current operating system version used by PRASA IT.
   9. PRASA IT is responsible to configured workstations and connects to PRASA telemetry network.
   10. Application Software requirements:
      a. SCADA must be developed with the following application version: InTouch 10.1 service pack 3 patch 1 or version use by PRASA IT.

      b. Wonderware Application Server 3.1 service packs 3 patch 1 or version use by PRASA IT.
      c. Device Integration Component 4.1.
      d. Active Factory for local Reports.
      e. Microsoft SQL Server 2008. Contractor must make sure using the current version used by PRASA IT.

D. **Note:** Once the SCADA application is approved by the PRASA Owner Representative and delivered to PRASA IT, PRASA IT is responsible to provide all applications software's license such as: database software and SCADA. Fast Ethernet Hub:
   1. Minimum of 12 RJ-45 ports supporting 100Base-TX transmission over 2 pair Category 5.
   2. UTP cable.
   3. One 100Base-FX module with 1 SC connector supporting 100Base-FX transmission over multimode duplex 62.5/125µ fiber.
   4. One DB-9 RS-232 interface port.
   5. One 1 IEC320 power cord.
   6. One expansion cable.
   7. Per Unit LEDs: Power status, collision, over temperature.
   8. Per Port LEDs: Packet reception, partition, link status.
   9. LCD unit ID indicator.
   10. Quantity: Two (2)
   11. Fast Ethernet hub shall comply with the following:
      a. IEEE 802.3u. 100Base-T compliant.
      b. 100 Mbps baseband CSMA/CD standard.
      c. ISO 8802/3.
   12. Products and Manufacturers: Provide one of the following:
      a. SuperStack II Hub 100 100Base-TX Hub 3C250B-TX, as manufactured by 3com.
      b. Or Approved Equal.

E. Uninterruptable Power Supply (UPS):
   1. UPS shall be provided with the following features:
      a. Continuous on-line sine wave output.
      b. Zero transfer time.
      c. 450 va/300 Watts.
      d. Surge protection (480 joule rating).
      e. EMI/RFI noise protection (25 to 40 dB).
      f. Quantity: One.
   2. Products and Manufacturers: Provide one of the following:
      a. Unison On-Line Sine Wave UPS PS 4.5, as manufactured by Tripp Lite or approved equal.

PART 2. EXECUTION

2.1 INSTALLATION

A. General:
   1. Install all equipment and components in accordance with approved Shop Drawings and installation instructions furnished by the manufacturer.
   2. Contractor shall give written notification to the Owner and Engineer 14 days in advance of his readiness to begin system checkout and shall schedule system checkout on dates agreed on by the Owner and Engineer.
   3. Contractor shall have a written procedure for checkout. This written procedure shall be submitted to the Owner and Engineer for approval three months prior to the beginning of checkout. Contractor shall submit for approval a written procedure for commissioning to the Owner and Engineer at the same time.
   4. It shall be Contractor 's responsibility to record the results of systems checkout, effect whatever remedial action is required and arrange for re-inspection to review said remedial action, at no additional cost to the Owner.

B. The completion of the above does not relieve Contractor from guarantees specified elsewhere in this Section. Services and Operator Instructions:
   1. Contractor shall furnish all repairs or replacement of defective materials, equipment or workmanship, including with respect to equipment, the services of factory-trained servicemen.
   2. Contractor shall furnish, as part of this Contract, a one-year service contract covering parts and labor for the complete system. Service contract shall be with nearest "Authorized dealer/service representative" for on-Site service.

2.2 START-UP AND TESTING

System Check-Out and Start-Up Responsibilities:

1. Contractor shall retain the services of the System Supplier to supervise and/or perform check-out and start-up of all integrated automation system components. As part of these services, the System Supplier shall include for those equipment items not manufactured by him the services of an authorized manufacturer's representative to check the equipment installation and place the equipment in operation. The manufacturer's representative shall be thoroughly knowledgeable about the installation, operation and maintenance of the equipment.
2. Conduct a complete system checkout and adjustment, including tuning of control loops, checking operation functions, and testing of final control actions. When there are future operational functions included in the work, they should be included in the system checkout. All problems encountered shall be promptly corrected to prevent any delays in start-up of the various unit processes.
3. Contractor shall provide all test equipment necessary to perform the testing during system checkout and start-up.
4. Contractor and System Supplier shall be responsible for initial operation of monitoring and control system and shall make any required changes, adjustment or replacements for operation, monitoring and control of the various processes and equipment necessary to perform the functions intended.

5. Integrated Automation Field Test:
    a. Contractor, under the supervision of the System Supplier, shall perform a complete system test to verify that all equipment and programmed software is operating properly as a fully integrated system, and that the intended instrumentation and control functions are fully implemented and operational. Any defects or problems found during the test shall be corrected by Contractor and then retested to demonstrate proper operation.
    Following demonstration of all system functions, the control system shall be running and fully operational for a continuous 48 hours period.

2.3 CONTROL SYSTEM TRAINING

A. General:
1. Contractor shall retain the services of the System Supplier to provide operation and maintenance training for the control system equipment as specified herein.
2. For equipment items not manufactured by the System Supplier, he shall provide for on-Site training by an authorized representative of the equipment manufacturer as part of his services. The manufacturer's representative shall be fully knowledgeable in the operation and maintenance of the equipment.
3. Contractor shall be responsible for all costs associated with training and shall provide all required materials, texts and required supplies.

B. On-Site Training:
1. Training shall accomplish the following requirements:
    a. Provide Application User Manual, instructions covering use and operation of the control system equipment to perform the intended functions.
    b. Explain procedures for placing the equipment in and out of operation and explain necessary actions and precautions to be taken regarding the overall plant monitoring and control system.
    c. Provide classes and field training as to how to change process control and alarm set points in all microprocessor based controllers and transmitters. Maintenance personnel shall be trained to enter passwords, programming or configuration data, etc.

+ + END OF SECTION + +

SECTION 144010
LIFTING DEVICE

PART 1. GENERAL

1.01 SUMMARY

1.01.1 SECTION INCLUDES

This section consist of furnishing and installing a lifting device consisting a trolley hoist of the capacity and design shown in the Construction Drawings, including crane, angles, steel plate, I-beams (W8x17, S12x3l.8, L8x44x7/16), bearing plates, bolts, nuts, washers, etc., as required for satisfactory operation.

1.01.2 QUALITY ASSURANCE

A. Manufacturer shall be a member of the Hoist Manufacturer's Institute, HMI.

B. Equipment furnished under this section shall be a standard product of the manufacturer and shall conform to all recommendations of the HMI unless otherwise specified.

C. Regulatory Agencies: Comply with applicable requirements for materials and installation established by the Puerto Rico Building Code.

D. Reference Standards: Comply with applicable provisions and recommendations of the following, except as otherwise shown or specified:

1. AISC, Manual of Steel Construction

2. ANSI B30.11 Monorail Systems and Underhung Cranes

3. ANSI B30.16, Safety Code for Overhead Hoists

4. AGMA, Standards of American Gear Manufacturers Association

E. Design Criteria

1. Select System components as shown and specified. Give special consideration to available headroom and vertical clearance.

2. Hoisting equipment weight and load shall not exceed the design capacity of the frame.

F. Equipment Guarantee

The equipment manufacturer shall guarantee all equipment furnished against defects in workmanship and material for a period of thirty six (36) months from the date of project Final Acceptance.

1.02 SUBMITALS

A. Shop Drawings. Submit Shop Drawings of the lifting devise system. For each equipment furnished include the following:

1. Complete description in sufficient detail to permit comparison with the technical specifications in this section.

2. Weights and performance data.

3. Deviations from Drawings and Specifications.

4. Affidavits of compliance with referenced standards and codes.

5. Manufacture's standards.

PART 2. <u>PRODUCTS</u>

A. The information for the blank spaces is found in the Construction Drawings. If this information is not found in the Construction Drawings it shall be as indicated by Engineer.

B. Hoisting Equipment

1. Lifting Capacity: Indicated in the Construction Drawings.

2. The hoisting equipment shall be Army-type.

3. Design Basis: Acco Babcok, Inc. Wright geared Army type trolley hoist, or approved equal.

4. The following data is indicated in the Construction Drawings or specified by the Engineer:

a) Manual or motor operated

b) Material of construction

c) Capacity: ____ ton

d) Lift of Load Chain: ____ ft.

e) Pull to travel: ____ lbs.

f) Number required: _____

C. Identification. The hoist shall be identified with stainless steel nameplates and shall be marked with the following:

1. Manufacturer and model number.

2. Date of manufacture with all pertinent ratings, operation and maintenance information.

3. Certification, stamp, or approval to applicable codes.

D. Surface preparation and shop painting

1. Shop painting. Surface preparation and shop painting are required for all ferrous metals, equipment and accessories.

2. Items of equipment such as motors, drives, etc. Shall be finish painted by the manufacturer with their best grade finish paint system. Color shall be as approved by the Engineer. If any damage to the paint system occurs during delivery, the equipment shall be repainted as directed by the Engineer.

3. Gears, bearing surfaces, and other unpainted surfaces shall receive a heavy application of a rust-resistant coating which shall be maintained during storage and until the equipment is placed into operation.

4. All machined iron surfaces including drilled and tapped holes, shall be completely covered with a heavy coat of protective grease.

5. Anchor Bolts. Al anchor bolts and nuts and other fasteners furnished for connection of the equipment to the structure shall be type 316 stainless steel, furnished by the equipment manufacturers, and shall be of ample size and strength for he purpose intended. Anchor bolts shall be hooked, and provided for direct embodiment during placement of concrete. Anchorage items shall conform to the applicable requirements.

PART 3. <u>EXECUTION</u>

A. Contractor shall furnish and install a lifting device consisting in a trolley hoist of the capacity and design shown in the Construction Drawings, including crane, angles, steel plate, I-beams (W8xl7, S12x3l.8, L8x44x7/16), bearing plates, bolts, nuts, washers, etc., as required for satisfactory operation.

B. The crane runway beams and support structure complete with their bearing plates, angle supports, anchor bolts and other accessories shall be furnished and installed in accordance with the details shown in the Construction Drawings and the requirements of the crane actually furnished.

C. Runway beams shall be standard wide flange sections of the dimensions called for in the Construction Drawings.

D. The track section shall be designed with a minimum safety factor of 5 based on the ultimate strength of the material.

E. The hoising hooks, including the necessary appurtenances to perform the work in a satisfactory manner, shall be furnished as shown on drawings and as required by Engineer.

F. Install equipment in accordance with details shown on the Construction Drawings, and approved shop drawings, and manufacture's recommendations.

G. Lubricate, test, adjust, and demonstrate proper, safe operation.

H. Installation shall include furnishing all required oil and grease for initial operation. Grade and types shall conform to the manufacturer's recommendations.

I. Start-up and test.

1. Make adjustment required to place equipment in proper operating condition.

2. A manufacturer's representative shall check and approve the installation before operation. He shall test and operate the hoist in the presence of the Engineer and verify that all equipment and controls conform to specified requirements. He shall revisit the job site as often as necessary until all trouble is corrected and the installation is entirely satisfactory.

SECTION 15A020
WALL VENTILATOR

PART 1. GENERAL

1.01 SUMMARY

1.01.1 SECTION INCLUDES

This section consists of furnishing and installing a corrosion proof powered wall ventilator, including extruded louver with P.V.C. bird screen, damper, caulking, fiber glass molded venturi inlet, pre-wired junction box, etc., as shown on plans or as specified herein.

1.01.2 QUALITY ASSURANCE

A. Equipment Guarantee. The equipment manufacturer shall guarantee all equipment furnished under this Contract against defects in workmanship and material for a period of one year from the date of final acceptance of the equipment by PRASA.

1.02 SUBMITALS

A. Shop Drawings. Submit Shop Drawings of the wall ventilator. For each equipment furnished include the following:

1. Complete description in sufficient detail to permit comparison with the technical specifications in this section.

2. Performance data.

3. Manufacturer's installation instructions.

PART 2. PRODUCTS

A. The ventilator shall be the one indicated in the approved equal to direct connect type "Hid-n-aire" shown in the following table. The capacity in terms of CFM and HP shall be as indicated in the Construction Drawings.

Model No.	HP	PEAK BK-HP	FAN RPM	CFM Versus Static Pressure								SONES @ FA
12HA1	1/12	.03	860	617	463	222						4.8
12HA2	1/8	.07	1140	819	711	579	412					7.6
12HA3	1/4	.24	1725	1239	1170	1098	1018	930	834	728	455	15.1
14HA1	1/12	.05	860	1038	863	631						6.3
14HA2	1/8	.11	1140	1376	1250	1108	938	729	400			9.9
14HA3	1/2	.40	1725	2082	2001	1916	1828	1733	1633	1523	1271	19.1
18HA1	1/4	.18	860	1982	1763	1510	1211	817				10.7
18HA2	1/2	.43	1140	2627	2467	2295	2107	1898	1671	1416		16.2

If the Construction Drawings do not indicate a capacity in terms of CFM and HP the model shall be approved equal to "Hid-n-aire" Model No. 12 HA-2; capacity 711 C.F.M. of free air with a four speed of 1140 R.P.M. at a static pressure differential of 1/8 W.G. The motor shall be lifetime lubricated.

B. Fiber-Air address in the internet is: http://www.fiberaire.com

PART 3. EXECUTION

A. Contractor shall furnish and install a corrosion proof powered wall ventilator, including extruded louver with P.V.C. bird screen, damper, caulking, fiber glass molded venturi inlet, pre-wired junction box, etc., as shown on plans or as specified herein. It also includes the furnishing of all labor, tools and equipment necessary for the proper completion of the work.

SECTION 15B200
SLUICE GATES

PART 1. GENERAL

1.01 SUMMARY

1.01.1 SECTION INCLUDES

Under this section, the contractor shall furnish and install the sluice gates of the size, type and construction shown in the Construction Drawings, specified herein, or as may be ordered by the Engineer, including necessary accessories for their proper installation and operation.

1.02 SUBMITALS

A. Product Data. Submit complete description in sufficient detail to permit comparison with this section.

PART 2. PRODUCTS

A. Waterway. Sluice gates shall have a clear waterway of the full normal diameter specified.

B. Type. Sluice gates shall be cast iron, bronze mounted, and have solid bronze adjustable wedges, conforming to the Standard Specifications of the American Water Works Association for Sluice Gates C-501.

They shall be provided with rising stem, operating stand and handwheel as shown or specified, and shall open by turning to the left.

1. Iron Castings. All sluice gate parts, except seat faces, wedges, stems, and shafts, and some miscellaneous trim, are to be cast from a superior quality of iron, remelted in a cupola, or in an air or electric furnace, producing a metal which is tough, of uniform fine grain, without chilled surfaces, readily machined, and conforming with the latest revision of A. S. T. M. A-126-30, Class B Metal Thickness as shown in the Construction Drawings for castings shall be considered minimum. All castings shall be clean and sound, without defect of any kind; no plugging, welding, or repairing of defects shall be allowed.

2. Bronze. All slice gate parts shall have the ability to resist corrosion. These parts and parts requiring surfaces to minimize friction shall be made of bronze, or faced with bronze or with other suitable and approved noncorrodible metal.

All parts of bronze or other noncorrodible metal, such as 'wedges, stem, stem nut, and facings, shall be the best of their kind and best suited to their function in service, and shall be agreed upon by the Authority and manufacturer as to physical properties before being used, if required by the Authority.

Metal for parts where strength and resistance to wear are needed, such as stem, stem nuts, couplings, and thrust nuts, shall have a tensile strength of not less than 60,000 psi.

Metal for wedges, wedge seats, and other parts, except facings, shall have a tensile strength of not less than 30,000 psi.

Metal for facings shall be sufficiently malleable to conform to and completely fill the grooves in the disc and frame and shall have a minimum compressive strength, without deformation of 4,000 psi.

3. **Bolts, Studs and Nuts.** All bolts, studs and nuts shall be American Standard regular and, except as otherwise specified shall be made of steel conforming with the latest revision of A. S. T. It. A-107-36 for carbon open-hearth, hot rolled bar steel. They shall be rustproof by and approved process, or they may be of "Everdur" or other high - tensile - strength, corrosion-resistant metal.

   Bolt beads and nuts shall be "semifinished" when bearing is on finished surfaces.

4. **Frames.** The frame shall be of cast iron of ample section and shall be cast in one piece. All surfaces forming joints or bearings shall be machined.

5. **Disc.** The disc shall be of cast iron with stiffening ribs and with a reinforced section around the rim opposite the gate facings. The disc shall have tongues on each side extending the full length of the disc and these tongues shall be accurately machined all over. Surfaces of the disc which come in contact with the seat facings, and wedges shall be accurately machined. A socket shall be provided above the horizontal center line of the gate, heavily reinforced by ribs, into which shall be fitted a one-piece nut of non-corrosible metal, threaded and keyed or pinned to the stem. Threaded nuts shall be prevented from turning during the operation of the gate.

6. **Stem.** The operating stem shall be of a size to withstand safely, without buckling or permanent distortion, all stresses, either compression, tension, or torsion, to which it may be subjected in the installation in which it is to be used.

   The screw sections of the stem shall have machine-cut threads, square or Acme, Standard, and the number of threads per inch shall be such as to work most efficiently with the operating mechanism to be used.

C. Kind. They shall be Waterman, Rodney Hunt, or of approved equivalent design, construction, materials and equal quality.

D. Working. Pressure. The gates and accessories shall operate safety, properly and with a practical degree of water-tightness under the maximum working pressure shown in the Construction Drawings or specified herein on the proposal form for the respective items.

E. Painting. All submerged parts of the sluice gates shall be painted with a shop coat of Koppers Bitumastic Coal Tar paint or equal, and for floor stands, handwheels, etc., a gray or black machinery enamel of approved quality, as directed by the Engineer.

PART 3. EXECUTION

A. Contractor shall furnish and install the sluice gates of the size, type and construction shown in the Construction Drawings, specified herein, or as may be ordered by the Engineer, including necessary accessories for their proper installation and operation.

B. Installation. All parts shall be thoroughly cleaned and examined to be sure they are free from injurious materials. Bolts, screws and all fittings shall be tightened firmly and uniformly. The alignment of all parts with respect to each other shall be true within the tolerance required and gate parts shall be set true to the elevations shown in the Construction Drawings. Any tightening of anchor bolts shall be carried out with the slide lightly wedged in the frame in order to prevent springing of the frame. Grout shall be poured behind the flange of the frame to insure that it bolts to a true surface. After installation, steel stems, gates guides, seats and wedge facings shall be given a coating of Lubriplate grease, and all other items shall be thoroughly lubricated in accordance with the manufacturer's recommendations.

C. Field Test. Leakage or other defects due to faulty design, poor workmanship or other causes, which may be found after the sluice gates are installed and operated, shall be made good by the Contractor at his own expense. The average leakage permitted is two (2) gallons per foot of slide perimeter per hour.

SECTION 15C010
COPPER PIPE

PART 1. GENERAL

1.01 SUMMARY

1.01.1 SECTION INCLUDES

This section includes furnishing and installation of all copper pipe, fittings and specials shown in the Construction Drawings or that the Engineer may order.

1.02 QUALITY ASSURANCE

A. Reference Standards. Comply with applicable provisions and recommendations of the following, except as otherwise shown or specified.

1. ASTM B88, Seamless Copper Pipe

2. ANSI B16.22 Wrough Copper and Bronze Solder Joint Pressure Fittings

3. Product Handbook of the Cooper Development Association Inc.

1.03 SUBMITTALS

A. Product Information and Installation Requirements. Submit for approval data on pipe, fittings, specials, and appurtenances.

1.04 PAYMENT PROCEDURES.

A. Pipe and fittings shall be paid once they pass all tests and it is accepted (approved) by Engineer, although pipe and fittings material on site shall be paid as indicated in the Contract Documents. Pipe tests can be performed by sections as approved by Engineer.

PART 2. PRODUCTS

2.01 MATERIALS

A. The material to be used for manufacturing copper pipe shall be of such quality and purity that the finished product shall conform in all respects to applicable requirements of the ASTM Designation B88 (latest revision) "Standard Specification for Seamless Copper Water Tube", and shall be cold-drawn to size. All copper pipe to be used shall be "Type K" as designated in the above ASTM specification. The pipes shall be finished by such cold working and annealing operations as are necessary to produce the required temper and surface finish. Any measured valve outside the specified limiting values for any dimensions may be cause for rejection. Copper pipe furnished to this specification shall be free from cuprous oxide as determined by microscopic examination at a magnification of 75 diameters.

B. Joints. The copper piping shall be assembled with soldered joints. The fittings shall conform to the ANSI B16.22. Solder shall be 95-5 tin-antimony.

PART 3. EXECUTION

A. The Contractor shall furnish and lay all copper pipes shown in the Construction Drawings or that the Engineer may order to complete specified work.

B. Copper pipe shall be provided for all locations shown on the Construction Drawings, described in the specifications or required by Engineer.

C. Proper and suitable tools, implements and facilities shall be provided and used for the safe and convenient prosecution of the work. Pipe shall be cut by approved means, which will produce a clean true cut, free from irregularities and leave a smooth and at right angles to the axis of the pipe. In planning his work, the Contractor shall exercise care to minimize the number of cuts required and to avoid wasting pipe.

D. All pipes shall be carefully examined for defects and no piece shall be laid which is known to be defective. If any defective piece is discovered after having been laid, it shall be removed and replaced with a sound one at the expense of the Contractor. Copper pipe shall be tested and inspected for visible leakage and other defects. The Contractor shall replace defective pipe and do any other work necessary to reduce or eliminate such leakage as may be founds.

E. Test After Laying. Pipelines shall be tested in sections. The maximum section size is the distance between the system valves in the system, or as required by the Engineer. The section to be tested shall be closed by valves, temporary flanges, plugs or bulk heads, as required. The pipe line shall then be filled with water. A force pump with calibrated tank or barrel and pressure gauge shall be attached to the pipe line in a satisfactory and approved manner, using small outlets in the pipe or taps made in plugs, caps or fittings for this purpose.

1. By means of the force pump, the water pressure shall be raised to 150% of the working pressure not to exceed the pipe class specified in the Construction Drawings or as directed by the Engineer. The pressure shall be maintained at the point for a period of not less than two (2) hours. No leakage shall be reported during this time period. If a leakage is discovered the Contractor shall replace defective pipe, fittings, repair joints, tighten bolts, or do any other work necessary to reduce leakage to the specified amount and shall then re-test.

2. The Contractor shall furnish all labor, materials and equipment required for tests, including force pumps, calibrated tank or barrel, screw plugs for holes tapped in the pipes, connections and bracing the uncompleted work. The gauges required for test will be furnished by the Engineer.

F. Disinfecting and Flushing. If the pipe will be used for potable water then it shall be desinfected and flushed according to a procedure indicated by Engineer.

SECTION 15C031
DUCTILE IRON PIPE AND FITTINGS (FORCE MAINS)

PART 1. GENERAL

1.01 SUMMARY

1.01.1 SECTION INCLUDES

Furnish all labor, materials, equipment and incidentals required and install ductile iron pipe, ductile iron fittings, and appurtenances as shownin the Construction Drawings and as specified herein.

1.02 PAYMENT PROCEDURES

A. Pipe and fittings shall be paid once they pass test and it is accepted by (approved) by Engineer.

1.03 REFERENCES

A. American Water Works Association (AWWA):

1. C 104 (ANSI A21.4): Cement-Mortar Lining for Ductile-Iron Pipe and Fittings for water.

2. C 105 (ANSI A21.5): Polyethylene Encasement for Ductile-Iron Piping for Water and other Liquids.

3. C 110 (ANSI A21.10): Ductile-Iron and Gray-Iron Fittings, 3-in. through 48-in., for Water and other Liquids.

4. C 111 (ANSI A21.11): Rubber-Gasket Joints for Ductile-Iron and Gray-Iron Pressure Pipe and Fittings.

5. C 115 (ANSI A21.15): Flanged Ductile-Iron Pipe with threaded Flanges.

6. C 150 (ANSI A21.50): Thickness Design of Ductile-Iron Pipe.

7. C151 (ANSI A21.51): Ductile Iron Pipe, Centrifugally Cast in Metal Molds or Sand-Lined Molds, for Water.

8. C 153 (ANSI A21.53): Ductile-Iron Compact Fittings, 3-in. through 16-in., for Water and other Liquids.

9. C600: Installation of Ductile-Iron Water Mains and their Appurtenances.

10. C606: Grooved and Shouldered Joints.

11. C651: Desinfecting Water Mains.

1.04 SUBMITTALS

1.04.1 SHOP DRAWING AND PRODUCT DATA

A. In accordance with requirements of General Specifications, submit the following:

1. Shop and Working Drawings.

a) Piping layouts in full detail.

b) Location of pipe hangers and supports.

c) Location and type of backup block or device to prevent joint separation.

d) Large scale details of all wall penetrations and special castings.

e) Schedules of all pipe, fitting, special castings, couplings, expansion joints, and other appurtenances.

1.04.2 QUALITY ASSURANCE/CONTROL SUBMITTALS

A. Certificates.

1. The manufacturer shall furnish a certified statement that the pipes and fittings have been inspected and tested in accordance with the specifications to which the material is manufactured.

1.05 QUALITY ASSURANCE

A. Ductile iron pipe and fittings shall be furnished by manufacturers who are fully experienced, reputable, and qualified in the manufacture of the materials to be furnished. Ductile iron pipe to be installed under this Contract may be inspected at the plant for compliance with these Specifications by an independent testing laboratory selected by the Engineer. The Contractor shall require the manufacturer's cooperation in these inspections. The cost of initial inspections at the plant will be borne by the Authority. The cost of additional inspections deemed necessary by the Authority because of the failure of the pipe to meet the Specification shall be borne by the Manufacturer.

B. Inspection of the pipe will be made by the Engineer's Representative after delivery. Pipe or fittings shall be subject to rejection at any time on account of failure to meet any of the Specification requirements, even though they may have been accepted as satisfactory at the place of manufacture.

C. Pipe or fittings rejected after delivery shall be marked for identification and shall immediately be removed from the job.

D. Pipe and fittings shall be as manufactured by American Cast Iron Pipe Company, U.S. Pipe, Clow Corporation, or approved equal.

1.06 DELIVERY, STORAGE, AND HANDLING

A. Delivery, storage and handling of pipe, fittings, and appurtenances shall be in accordance with AWWA C600, Section 2 except as specified otherwise.

B. Delivery. The contractor, as directed, shall furnish the pipe; fittings, gaskets or other material specified or required and shall deliver these materials at the places designated by the Authority.

Pipes, fittings, special pieces and joint materials should be delivered along sides the pipe trench, near the places where they are to be installed, as shown on the project plans.

PART 2. PRODUCTS

2.01 DUCTIL IRON PIPE

A. Ductile iron pipe shall conform to AWWA C151. Flanged pipe shall conform to AWWA C115.

B. Unless otherwise noted in the Construction Drawings, Pipe shall be Class 250. The minimum pressure rating of fittings and joints shall be 250 psi.

C. The barrel thickness of the pipe shall not be less than that stated in the specification ANSI A21.50 of latest revision, for the respective diameter of pipe.

2.02 FITTINGS

A. Fittings shall be ductile iron and shall conform to AWWA C 110.

B. Compact fittings from 3-inch through 12-inch shall be also in accordance with ANSI specifications A21.53 and/or A21.11 of latest revision (AWWA C153 and/or C111 of latest revision, respectively). All necessary corten bolts gaskets and ductile iron glands must be included. All accessories shall be individually packaged.

C. Outlet from 4-inch to 12-inch may be provided by tapping saddle, such as American Tapping Saddle and Branch Connection, or approved equal.

D. All fittings shall be bituminous coated outside and cement lined inside, in accordance with ANSI specification A21.4 (of latest revision) (AWWA C104, of latest revision).

E. Wall Casting:

1. Wall casting shall be of the sizes and type as shown in the Construction Drawings. Flanges and mechanical joint bells shall be drilled and tapped for studs where flush with the wall.

2. Wall casting shall be provided with an intermediate wall collar. The collar shall be located at the center of the overall length of casting set flush with the wall. For casting which extend through the wall, the collar shall be located such that it is within the middle third of the wall. Collars shall either be cast integrally with the casting or shall be of the assembled type as manufactured by U.S. Pipe & Foundry Company, consisting of two mechanical joint retainer glands with gasket.

2.03 JOINTS

A. Mechanical joints and push-on joints shall conform to AWWA C 111. The design and shape of the gasket and the annular recess shall be such that the gasket is locked in place against displacement, as the joint is assembled. The Contractor shall furnish the necessary gaskets, lubricants and other accessories for jointing rubber gasket bell and spigot joints in quantities ten percent (10%) in excess of the theoretical requirement.

B. Buried joints shall be push-on or mechanical joint type. Joints above finished grade or in vaults and pump station shall be flanged unless shown otherwise in the Construction Drawings.

C. Restrained joints shall be " Flex-ring" or "Lok-Ring" by American Cast Iron Pipe Company, "TR Flex" by U.S. Pipe Company, "Super-Lock" by Clow Corporation, or equal.

D. Flanges shall have a 3.2-mm (1/8") thick flat inserted rubber gaskets. Flanges shall be flat faced with a serrated finish.

E. Filler flanges and believed filler flanges shall be furnished and install as required. Filler flanges and believed filler flanges shall be furnished faced and drilled complete with extra length bolts.

2.04 ACCESSORIES.

A. The contractor shall furnish all other materials and accessories required for the successful handling, laying, jointing and testing of the pipeline. This material shall include all temporary bulkheads, over flanges and similar appurtenances required for protection of the pipe during the work and all equipment except gauges required for field testing of the pipe lines.

B. Closure pieces. Closure pieces shall be furnished after the pipes, which they are to joint, are completely installed and will be furnished to the field dimensions required. Closures shall be made with standard pipe sleeves with push-on joints.

2.05 COATING AND LININGS

A. Pipe and fittings shall have a cement mortar lining and asphaltic seal coat on the inside in accordance with AWWA C 104. All pipe and fittings, except where painting is specified, shall have an asphaltic coating on the outside in accordance with AWWA C 151.

2.06 IDENTIFICATION

A. The weight, class or nominal thickness, and casting, period shall be shown on each pipe. The manufacturer's mark, the year in which the pipe was produced and the letters “DI” of "ductile", shall be cast or stamped on the pipe.

B. Gaskets shall be marked with name of manufacturer, size, and proper insertion direction.

PART 3. EXECUTION

3.01 INSTALLATION OF BURIED PIPE

A. The contractor shall furnish, deliver, haul, store, protect and perform all work necessary for installing, jointing and testing the ductile cast iron pipes, fittings and accessories required. Including everything necessary to complete the work in readiness for operation, as shown on plans.

B. Contractor shall excavate all trenches and lay pipes as specified in Section 02A092 "Trench Excavation for Pipe".

C. Placing pipe in the trench. Proper implements, tools, and facilities satisfactory to the engineer shall be provided and used by the contractor for the safe and convenient prosecution of the work. All pipe, fittings, valves, and similar pieces will be carefully lowered into the trench. Piece by piece, by means of derricks, ropes, or other suitable tools or equipment; in such manner as to prevent damage to the pipe. Under no circumstances shall pipe or accessories be dropped or dumped into trench.

In lowering the pipe into the trench, care shall be exercised to avoid bumping the pipe already in the trench. Timbers shall be used in front of the end of the pipe previously laid. To serve as a bumper to prevent damage from a swinging pipe, as it is lowered into the trench.

D. Pipe Kept Clean. All foreign matter or dirt shall be removed from the inside of the pipe before it is lowered into its position in the trench and it shall be kept clean by approved means during and after laying.

E. Blocking of pipe. Only if approved by the engineer, shall pipes be laid on wood blocking and hold in correct alignment by wood wedges, placed transversely to the line of pipe. Blocking and wedges shall be out from sound lumber.

Blocks shall be bedded firmly with uniform bearing, and shall be level across the bottom of the trench. The trench shall be excavated at least 2.5 cm. below grade, and the block shall project at least 2.5 cm. above the trench bottom. They shall be aligned to the proper grade.

F. Making the Joints. All joints shall be made in strict accordance with the instructions of the pipe manufacturer.

The contractor shall assume full responsibility for satisfactory performance of the pipe in the line, as far as meeting the leakage test specified on the priory mentioned correspondent specification.

G. Prevention of trench water from entering pipe. At times when pipe laying is not in progress, the open ends of the pipe shall be tightly closed by approved means, and no trench water shall be permitted to enter the pipe. No pipe shall be laid in water, or when the trench conditions or the weather are unsuitable for such work, except by permission of the Engineer.

H. Cutting pipe. Pipe shall be cut by means of pipe cutters, sharp diamond point chisels or other approved means which will produce a clean true cut, free from irregularities, and leave a smooth end at right angles to the axis of the pipe. In planning his work, the contractor shall exercise care to minimize the number of cuts required and to avoid wasting pipe.

I. Installation and joints assembly of pipe, fittings, and appurtenances shall be in accordance with AWWA C600, Sections 3.3 and 3.4 except as specified otherwise.

J. Joint deflection shall not exceed 75 percent of the pipe manufacturer's maximum recommended deflection.

K. Valves shall be installed so that adjacent pipe will not be required to support the weight of the valve. Pipe shall be supported in such a manner to prevent stress on the valve. In no case shall valves be used to bring misaligned pipe into alignment. Valves shall be installed in the closed position.

L. Dead ends shall be closed with plugs or caps that are suitably restrained to prevent blowing off under test pressure. If a valve precedes the plug or cap it too shall be restrained against blowing off.

3.02 INSTALLATION ABOVE GRADE PIPE

A. Install piping and fittings true to alignment. Provide rigidly supported thrust anchors where required.

B. Install proper size sleeves for all pipes passing through floors or walls as shown in the Construction Drawings. Where indicated in the Construction Drawings or required for liquid or gas-tightness seal the pipe with a mechanical seal.

C. Furnish and install concrete inserts the hangers and supports in the concrete as it is placed. Set in compliance with the requirements of the piping layout and jointing method. Verify locations from approved piping layout drawings and the structural drawings.

D. Flanged joints shall be made with bolt studs with a nut on each end, or stud with nuts where the flange is tapped. The number and size of bolts shall comply with AWWA C 110.

E. Prior to assembly of grooved couplings, the grooves as well as other parts shall be thoroughly cleaned. The ends of the pipes and outside of the gaskets shall be moderately coated with petroleum jelly, cup grease, soft soap, or graphite paste, and the gasket shall be slipped over one pipe end. After the other pipe has been brought to the correct position, the gasket shall be centered properly over the pipe ends with the lips against the pipes. The housing sections then shall be placed. After the bolts have been inserted, the nuts shall be tightened until the housing sections are firmly in contact, metal-to-metal, without excessive bolt tension.

F. Valves, fittings, equipment, and appurtenances needed upon the pipelines shall be set and jointed as indicated in the Construction Drawings or as required. Pipe and appurtenance connected to equipment shall be supported in such a manner as to prevent any strain being imposed on the equipment. When manufacturers have indicated requirements that piping loads shall not be transmitted to their equipment, a certification shall be submitted stating that such requirements have been complied with.

3.03 CONNECTIONS WITH EXISTING PIPES

A. Connections to existing pipes shall be made using suitable joints and fittings for the conditions encountered. Each connections with an existing pipe shall be made at the time and under conditions which will least interfere with operation of the treatment plant. Connections with buried existing

flanges shall require removal of grout from the flanges. Remove concrete thrust block in when encountered for connections to existing pipes.

B. Facilities shall be provide for proper dewatering and for disposal of all water removed from the dewatering lines and excavations without damage to adjacent property.

3.04 FIELD TESTING AND DISINFECTION

A. Prior to testing, pipe shall be thoroughly flushed to remove all foreign material. Material flushed from the pipe shall be removed from the site.

B. General

1. Test all piping as specified below except as otherwise authorized by Engineer.

2. Testing shall be tested in sections. The maximum section size is the distance between two consecutive valves in the system. Smaller section sizes may be required by the Engineer.

3. Notify Engineer 48 hours in advance of testing.

4. Provide all testing apparatus, including pumps, hoses, gates and fittings

5. Pipelines shall hold the specified test pressure for a period of 2 hours.

6. Pipelines which fail to hold specified test pressure or which exceed the allowable leakage rate shall be repaired and retested.

7. Test pressures required are at the lowest elevation of the pipeline section being tested unless otherwise specified.

8. Unless otherwise approved, conduct all tests in the presence of the Engineer. Repeat test in the presence of local authorities having jurisdiction if required by them.

C. Clean of all dirt, dust, oil, grease and other foreign material, before pressure and leakage tests.

D. Pressure and Leakage Tests.

1. Conduct combined pressure and leakage test in pipelines.

2. Furnish and install a temporary testing plugs or caps; pressure pumps, pipe connections, meters, gages, equipment, and labor.

3. Test to comply with Engineer's orders and specifications.

4. Test pipelines in excavation or embedded in concrete before backfill or placing of concrete and test exposed piping before field painting.

5. The section to be tested shall be closed by valves, temporary flanges, plugs or bulkheads, as required. The pipeline shall then be filled with water. A force pump with calibrated tank or barrel

and pressure gauge shall be attached to the pipeline in a satisfactory and approved manner, using small outlets in the pipe or taps made in the plugs, caps or fittings for this purpose.

6. By means of the force pump, the water pressure shall be raised to 150% of the working pressure not to exceed the pipe class specified in the Construction Drawings or as directed by the Engineer. The pressure shall be maintained at the point for a period of not less than two (2) hours, during this time the actual amount of water force in the pipeline shall be determined by a measurement in the calibrated tank or barrel. This amount shall be taken as a basic for computing the leakage per twenty-four (24) hours.

7. While under test pressure, the leakage from all pipes, valves and fittings under test shall be in accordance to AWWA Standard C600 (latest revision).

$$L = \frac{SD(P)^{1/2}}{133{,}200}$$

L = leakage allowed , in galons per hour
S = Length of pipe tested in feet
D = nominal diameter of the pipe, in inches
P = average test pressure during the hydrostatic test, in poiunds per square inge (gauge)

When testing against closed metal-seated valves, an additional testing allowance per closed valve of .0078 gal/h/in of nominal valve size shall be allowed. When hydrants are in the test section, the test shall be made against the main valve in the hydrant.

8. If the leakage discovered on test exceeds the amount specified the Contractor shall replace defective pipe, fittings, repair joints, tighten bolts, or do any other work necessary to reduce leakage to the specified amount and shall then re-test.

9. The Contractor shall furnish all labor, materials and equipment required for tests, including force pumps, calibrated tank or barrel, screw plugs for holes tapped in the pipes, connections and bracing the uncompleted work. If unable to achieve and maintain specified pressure for one hour with no additional pumping, section failed to pass test.

10. If section fails pressure and leakage test, locate, uncover, and repair or replace defective pipe, fitting, or joint, at no additional expense and without time extension. Conduct additional tests and repairs until section passes test.

E. Disinfecting and Flushing applicable for potable water lines.

1. Disinfect potable water lines using procedures and material conforming to AWWA C651.

2. Dosage to produce minimum 10 ppm after minimum of 24 hour contact period.

3. After treatment, flush with clean water until residual chlorine content less than 0.2 ppm.

4. Prevent contamination of water in existing water mains. Dispose of water used in disinfecting and flushing in acceptable manner.

3.05 PAINTING

A. All exposed piping shall be painted as specified in corresponding section and as indicated by Engineer

SECTION 15C040
DUCTILE IRON PIPE
(GRAVITY SYSTEM)

PART 1. GENERAL

1.01 SUMMARY

1.01.1 SECTION INCLUDES

This section includes furnishing and installing, delivering, hauling, storing, protecting and performing all work necessary for installing, jointing and testing the ductile cast iron pipes, fittings and accessories required. Including everything necessary to complete the work in readiness for operation, as shown on the Construction Drawings and as specified herein.

1.02 PAYMENT PROCEDURES.

A. Pipe and fittings shall be paid once they pass all tests and it is accepted (approved) by Engineer.

1.03 SUBMITTALS

If the air test is used, the equipment to be used shall be submitted to the Engineer for approval. The equipment shall include, but is not limited to the air metering equipment and the air compressor.

PART 2. PRODUCTS

2.01 MATERIALS

A. Type of Pipe Fittings

1. Ductile iron pipe shall be American manufactured and in accordance with ANSI A21.50 and A21.51 (of latest revision) AWWA C150 and AWWA C151 (of latest revisions, respectively). Pressure classes 150, 200, 250, 300 and 350 psi, in nominal 18-feet lengths with push-on joints and/or mechanical joint, for laying condition of types 1, 2, 3, 4 and 5; and with the respective cover required in the specifications.

2. The lining material for pipe and fittings shall be virgin polyethylene complying with ANSI/ASTM D1248, compounded with an inert filler and with sufficient carbon black to resist ultraviolet rays during aboveground storage of the pipe and fittings. The polyethylene shall be bonded to the interior of the pipe or fitting by heat. All surface areas to be lined shall be blast cleaned comparable to the requirements of SSPC-SP6 or NACE #3 (this is a comparison only since there is no surface preparation specifications for Ductile Iron Pipe). Polyethylene lining shall cover the inner surface of pipe and fittings as descrived herein. In pipe utilizing push-on gaskets, the lining shall extend from the spigot end through the socket to the edge of the gasket sealing area. In mechanical joint pipe the lining shall extend from the spigot end through the socket to the edge of the gauging ring. The lining in fittings shall cover the interior surfaces including the socket areas as defined above. Lining in pipe and in fittings shall be 40 mils nominal thickness. Minimum lining thickness shall be 30 mils.

3. Gravity pipes shall be bituminous coated outside to prevent soil corrosion, in accordance with ANSI specifications A21.51 (of latest revision) (AWWA C151, of latest revision).

4. Fittings shall be gray cast iron and manufactured in accordance with ANSI specification A21.10 and/or A21.11 (of latest revision) (AWWA C110 and/or C111 of latest revision, respectively).

5. Compact fittings from 3-inch through 12-inch shall be also in accordance with ANSI specifications A21.53 and/or A21.11 of latest revision (AWWA C153 and/or C111 of latest revision, respectively). All necessary corten bolts, gaskets and ductile iron glands must be included. All accessories shall be individually packaged.

6. All fittings shall be bituminous coated outside and cement lined inside, in accordance with ANSI specification A21.4 (of latest revision) (AWWA C104, of latest revision).

7. Unless otherwise specified, the inside coating for pipe not cement-lined shall be bituminous material as thick as practicable (at least one (1) mil) and conforming to all appropriate requirements for seal coat in ANSI A21.4 of latest revision.

8. The weight, class or nominal thickness, and casting, period shall be shown on each pipe. The manufacturer's mark, the year in which the pipe was produced and the letters “d” or "ductile", shall be cast or stamped on the pipe.

B. Joints

Joints for ductile cast iron pipe and fittings shall be push-on-joint, mechanical joint or flanged joint as shown on Construction Drawings, in accordance with ANSI A21.11 (AWWA C111) of latest revision, except as otherwise indicated. The design and shape of the gasket and the annular recess shall be such that the gasket -is locked in place against displacement, as the joint is assembled. The contractor shall furnish the necessary gaskets, lubricants and other accessories for jointing rubber gaskets bell and spigot joints in quantities ten percent (10%) in excess of the theoretical requirement.

C. Barrel Thickness

For type 1, 2, 3, 4 and 5 laying conditions, the barrel thickness of the pipe shall not be less than that stated in the specification ANSI A21.50 of latest revision, for the respective diameter of pipe.

D. Pipes to be delivered sound.

All the pipes must be delivered in all respects sound and conformable to these specifications. The inspection shall not relieve the contractor of any of his obligations in this respect. Any defective pipes, which may have passed the engineer at the works or elsewhere, shall be at all times liable to rejection when discovered, until the completion and adjustment of the contract.

For transportation of the pipe, the pipe manufacturer may place pipes inside the greater pipes provided it is done using materials and methods which will not cause damage to the pipes, the pipe lining, or the pipe coating. No other party shall place any type of material inside of the pipes at any time.

E. Laying condition. The maximum depth of cover shall comply with ANSI A21.50 (AWWA C150 of latest revision) and ANSI A21.51 (AWWA C151 of latest revision).

F. Delivery: The Contractor as directed, shall furnish the pipe, fittings, gaskets or othe rmaterials specified or required and shall deliver these materials at the places designated by the Authority.

Pipes, fittings, special pieces and joint materials should be delivered along sides the pipe trench, near the places where they are to be installed, as shown on the project plans.

G. Accessories. The contractor shall furnish all other materials and accessories required for the successful handling, laying, jointing and testing of the pipeline. This material shall include all temporary bulkheads, over flanges and similar appurtenances required for protection of the pipe during the work and all equipment except gauges required for field testing of the pipe lines.

H. Handling Materials. The Contractor shall be responsible for the safe and proper delivery, unloading, storage and handling of materials furnished by him and intended for the work until it has been incorporated in the completed project. Rubber gaskets shall be stored under cover, in a cool, dry location, and in darkness.

Proper care and protection shall be exercised in handling pipe, fittings, and other accessories in unloading from delivery trucks. The pipe shall be lifted by hoists and slid or rolled on skidways in such manner as to avoid shock. Under no circumstances shall pipe be dropped. Pipe must not be skidded or rolled against pipe already on the ground.

I. Closure pieces. Closure pieces shall be furnished after the pipes, which they are to joint, are completely installed and will be furnished to the field dimensions required. Closures shall be made with standard pipe sleeves with push-on joints.

J. The following table contains standard ductile iron pipe sizes and pressure class:

Nominal Pipe Size (in)	Pressure Class
3	350
4	350
6	350
8	350
10	350
12	350
14	250, 300, 350
16	250, 300, 350
18	250, 300, 350
20	250, 300, 350
24	200, 250, 300, 350
30	150, 200, 250, 300, 350
36	150, 200, 250, 300, 350
42	150, 200, 250, 300, 350
48	150, 200, 250, 300, 350
54	150, 200, 250, 300, 350

Nominal Pipe Size (in)	Pressure Class
60	150, 200, 250, 300, 350
64	150, 200, 250, 300, 350

PART 3. EXECUTION

A. The contractor shall furnish, deliver, haul, store, protect and perform all work necessary for installing, jointing and testing the ductile cast iron pipes, fittings and accessories required. Including everything necessary to complete the work in readiness for operation, as shown on plans.

B. Trench excavation and pipe laying shall be as specified in Section 02A092 " Trench Excavation for Pipe."

C. Placing pipe in the trench. Proper implements, tools, and facilities satisfactory to the engineer shall be provided and used by the contractor for the safe and convenient prosecution of the work. All pipe, fittings, valves, and similar pieces will be carefully lowered into the trench. Piece by piece, by means of derricks, ropes, or other suitable tools or equipment, in such manner as to prevent damage to the pipe. Under no circumstances shall pipe or accessories be dropped or dumped into trench.

In lowering the pipe into the trench, care shall be exercised to avoid bumping the pipe already in the trench. Timbers shall be used in front of the end of the pipe previously laid. To serve as a bumper to prevent damage from a swinging pipe, as it is lowered into the trench.

D. Pipe Kept Clean. All foreign matter or dirt shall be removed from the inside of the pipe before it is lowered into its position in the trench and it shall be kept clean by approved means during and after laying.

E. Blocking of pipe. Only if approved by the engineer, shall pipes be laid on wood blocking and hold in correct alignment by wood wedges, placed transversely to the line of pipe. Blocking and wedges shall be out from sound lumber.

Blocks shall be bedded firmly with uniform bearing, and shall be level across the bottom of the trench. The trench shall be excavated at least 2.5 cm. Below grade, and the block shall project at least 2.5 cm. above the trench bottom. They shall be aligned to the proper grade.

F. Making the Joints. All joints shall be made in strict accordance with the instructions of the pipe manufacturer.

The contractor shall assume full responsibility for satisfactory performance of the pipe in the line, as far as meeting the leakage test specified on the priory mentioned correspondent specification.

G. Prevention of trench water from entering pipe. At times when pipe laying is not in progress, the open ends of the pipe shall be tightly closed by approved means, and no trench water shall be permitted to enter the pipe. No pipe shall be laid in water, or when the trench conditions or the weather are unsuitable for such work, except by permission of the Engineer.

H. Cutting pipe. Pipe shall be cut by means of pipe cutters, sharp diamond point chisels or other approved means which will produce a clean true cut, free from irregularities, and leave a smooth end

at right angles to the axis of the pipe. In planning his work, the contractor shall exercise care to minimize the number of cuts required and to avoid wasting pipe.

3.02 Field quality control

A. Contractor shall test the pipe according to Section 15C240 titled Sewer Pipe Test.

B. Contractor shall locate and repair defective joints, pipes and others, and retest until the tested values fall within specified limits.

SECTION 15C100
POLYVINYL CHLORIDE (PVC) GRAVITY SEWER PIPE AND FITTINGS

PART 1. GENERAL

1.1 SUMMARY

1.1.1 SECTION INCLUDES

This section includes furnishing and installing all Polyvinyl Chloride (PVC) gravity sewer pipe and fittings, shown in the Construction Drawings or that may be ordered by the Engineer. The work to be done includes the laying, jointing and testing of the sewer lines, and everything necessary to complete the work in readiness for operation.

1.2 PAYMENT PROCEDURES.

Pipe and fittings shall be paid once they pass all tests and it is accepted (approved) by Engineer.

1.3 SYSTEM DESCRIPTION

1.3.1 DESIGN AND PERFORMANCE REQUIREMENTS

PART 2. PRODUCTS

2.1 MATERIALS

A. Type. Polyvinyl Chloride (PVC) pipe and fittings up to 15" diameter shall conform to the requirements of the latest revision of ASTM Specification D3034 (latest revision) with SDR-35, Bell and Spigot rubber ring joint providing a water tight joint. Polyvinyl Chloride (PVC) pipe and fittings 18" diameter and larger shall conform to ASTM Designation F679 (latest revision). All fittings and accessories (drop manhole connections, raisers and service lateral "Y") shall be as manufactured and furnished by the pipe supplier or approved equal and with bell and/or spigot configuration identical to that of the pipe.

Standard size of pipes meeting these requirements are:

Nominal Pipe Size (in.)	
SDR 35 ASTM D3034	SDR 35 ASTM F679
4	18
6	21
8	24
10	27
12	
15	

B. Pipe Stiffness. Minimum pipe stiffness measured at 5 percent deflection shall exceed 46 psi. when tested in accordance with ASTM Designation D2412 (latest revision):

C. Marking. Pipe in compliance with this specification shall be clearly marked on each section of pipe with the following information:

1. PVC cell classification

2. The legend type (e.g. PSM SDR-35 PVC Sewer Pipe)

3. Manufacture's name or trademark

4. Nominal pipe size

5. ASTM Designation D-3034 (latest revision) or F-679 (latest revision)

D. Jointing System. The pipe and fittings shall be furnished with bell and spigot ends for joining with a solid, uniform cross-section rubber gasket as the sealing element. The rubber gasket shall meet the requirements of ASTM F477 (latest revision).

1. Since concrete will not bond to PVC pipe in connection to manholes and other rigid structures, some form of seal or water stop is required. This seal or water stop must be only that which does the pipe manufacturer approves. Manhole couplings, corresponding to the size of sewer pipe, can be cast directly into a rigid structure such as manhole or manhole base as a method for assuring water tightness. In case manhole couplings are not available, a rubber ring can be stretched around the pipe and used as a water stop when cast into the structure wall.

2. Strength characteristics of the pipe, bedding, backfilling, and tamping practices and recognition that a certain amount of settling usually occurs at the manhole shall be considered when using the above connections to manholes.

3. The joint shall provide a permanent seal against infiltration or ex-filtration. The jointing technique shall be with elastomeric gasket. The elastomeric compound shall comply in all respects with the physical requirements specified in ASTM F477 (latest revision).

2.2 SOURCE QUALITY CONTROL

A. Inspection. Testing of pipe shall be in accordance with ASTM D2412 (latest revision). The quality of all materials, the process of manufacture and the finished pipe shall be subject to inspection and approval by the Engineer, or other representative of the Owner. Such inspection may be made at the place of manufacture or on the work after delivery or at both places. The pipe shall be subject to rejection at any time on account of failure to meet any of the specification requirements, even though sample pipes may have been accepted as satisfactory at the place of manufacture.

B. All pipe and fittings to be installed under this item may be inspected at the plant for compliance with these Specifications by an independent testing laboratory selected by the Owner. The Contractor shall require the manufacturer's cooperation in this inspection.

C. Rejected Specimens. Pipe rejected after delivery shall be marked for identification and shall be removed from the job at once.

PART 3. EXECUTION

3.1 CONSTRUCTION AND INSTALLATION

A. The Contractor shall furnish and install all Polyvinyl Chloride (PVC) gravity sewer pipe and fittings shown in the Construction Drawings and those that may be ordered by the Engineer. The work to be done includes the laying, jointing and testing of the sewer lines, and everything necessary to complete the work in readiness for operation.

1. PVC pipe which is stockpiled during long exposure (several months) to sunlight, must be covered with canvas or other opaque material. Clear plastic sheet for covering of pipe may not be used. During storage air circulation should be provided for. Individual lengths of pipe should be stacked in piles no higher than five feet. Pipe damaged due to improper storage will be rejected for use, by the Engineer.

B. Trench excavation and pipe layout shall be according to 02A092 "Trench Excavation for Pipe". Contractor shall also implement the following special techniques:

1. Bell holes for Elastomeric Seal Joints. When the pipe being installed is provided with elastomeric seal joints, bell holes shall be excavated in the bedding material to allow for unobstructed assembly of the joint. Care should be taken that the bell hole is no larger than necessary to accomplish proper joint assembly. When the joint has been made, the bell hole should be carefully filled with bedding or haunching material to provide for adequate support of the pipe throughout its entire length.

2. Minimum Cover for Load Application. Provide at least 90 cm. (36 in.) of cover over the top of the pipe before the trench is wheel loaded, and 1.20mt. (48 in.) of cover before utilization of a hydro-hammer during compaction.

3. Use of Compaction Equipment**.** Take care to avoid contact between the pipe and compaction equipment. Compaction of haunching, initial backfill, and backfill material should generally be done in such a way so that compaction equipment is not used directly above the pipe until sufficient backfill has been placed to ensure that such compaction equipment will not have a damaging effect on the pipe.

4. Before the pipe is lowered into the trench, the spigot and bell must be cleaned and free from dirt. Gasket and bell shall be lubricated by a lubricant which is soluble in water, furnished by the pipe manufacturer and harmless to the rubber gasket. The pipe shall be properly aligned in the trench to avoid any possibility of contact with the side of the trench and fouling the gasket. As soon as the spigot is centered in the bell or the previously laid pipe, it shall be forced home with jacks or come along. After the gasket is compressed and before the pipe is brought fully home, each gasket shall be carefully checked for proper position around the full circumference of the joint. The jacks or come-along shall be anchored sufficiently back along the pipeline so that the pulling force will not dislodge the pieces of pipe already in place.

5. The pipe shall not be installed under roads with less than three (3) feet of cover unless additional precautions are taken. Flexible conduits can deflect and rebound under dynamic loading conditions at shallow depths of cover if the trench width is not sufficient bridged based on design requirements or as directed by the Engineer. The pipe shall be laid true to line and grade. Curved sewers will not be allowed.

3.2 FIELD QUALITY CONTROL

3.02.1 SITE TEST

A. Testing. The pipe shall be tested according to Section 15C240 titled Sewer Pipe Test.

B. Deflection. In addition to the tests indicated above, the Contractor shall be responsible to perform deflection test to all installed PVC pipes. These deflection test shall be make not less than 30 days after the installation of the pipe has been completed and shall be accomplished by pulling an approved "GO-NO GO" Gauge through every completed pipeline. Deflection shall be limited to 5%. Any line failing "GO-NO GO" test shall be removed, then re-laid, if the pipe is not damaged or replaced with acceptable new pipe at the contractors expense, then retest. The use of a vibratory re-rounding device of any kind is strictly prohibited.

1. The test shall be conducted not sooner than thirty days after the final backfill has been in place and the installation of service connections, to permit stabilization of the soil-pipe system. The method of testing shall be subject to the approval of the Owner's Representative. The test must be accomplished on a manhole-to-manhole basis, following flushing of the line by the Contractor. All tests shall be carried out in the presence of the Owner's Representative.

2. Replacement or re-laying of any line failing the deflection test shall be done according to the requirements included in the Contract Documents. After replacement or re-laying, deflection test shall be after the new final backfill has been in place for at least thirty days. Retesting for deflection and other specified tests will be done until the requirements are met.

3. The deflection test shall be performed without mechanical pulling devices. Test shall be performed after the sewer line has passed the infiltration and/or ex-filtration test.

4. The Go-No-Go Gauge shall be a rigid mandrel with an outside diameter (O.D.) equal to 95% of the inside diameter (I.D.) of the pipe. The I.D. of the pipe, for the purpose of determining the outside diameter of the mandrel, shall be the pipe's average outside diameter minus tow minimum wall thicknesses for O.D. controlled pipe and the average inside diameter for I.D. controlled pipe. All dimensions shall be per appropriate standard. Statistical or other "tolerance packages" shall not be considered in mandrel sizing.

5. The rigid mandrel shall be constructed of a metal or a rigid plastic material that can withstand 200 psi without being deformed. The mandrel shall have nine or more "runners" or "legs" as long as the total number of legs is an add number. The barrel section of the mandrel shall have a length of at least 75% of the inside diameter of the pipe. A proving ring shall be provided and used for each size mandrel in use. The mandrel shall be approved by the Owner's Representative prior to use.

6. Adjustable or flexible mandrels are prohibited. A television inspection is not a substitute for the

deflection test. A deflectometer is not acceptable. Mandrels with removable legs or runners are not acceptable.

7. Deflection Testing will not be measured for payment. No direct payment shall be made for Deflection Testing, and all costs in connection therewith shall be included in the applicable contract price for the item to which the work pertains.

8. Any line failing to pass the deflection test shall be removed and re-laid within the next 30 calendar days.

9. Re-rounding of pipe that does not pass the deflection test will not be allowed.

10. Pipe's manufacturing tolerances will not be taken into account in the calculation of the permissible deflection limit.

C. Contractor shall locate and repair defective joints, pipes and others, and retest until the tested values fall within specified limits.

3.03 CLEANING

A. Cleaning. At the conclusion of the work the Contractor shall thoroughly clean all of the new sewers by flushing with water or other means to remove all dirt, stones, pieces of wood, or other material which may have entered during the construction period. Debris cleaned from the lines shall be removed from the lowest manhole. If, after this cleaning, any obstructions remains, they shall be removed. After the sewers are cleaned and if the groundwater level is above the pipe, or following a heavy rain, the Engineer will examine the pipe for leaks. If any defective pipes or joints are discovered at this time, the Contractor shall repair them.

B. All water for testing and flushing shall be furnished by the Contractor at his own expense.

SECTION 15C115
PVC WATER (GRAVITY AND PRESSURE)
AND SEWER FORCE MAIN PIPE AND FITTINGS

PART 1. GENERAL

1.01 SUMMARY

1.01.1 SECTION INCLUDES

This section consists of furnishing and installing Polyvinyl Chloride (PVC) water pipe and fittings, and PVC sewer force main pipe and fittings shown in the Construction Drawings or that may be ordered by the Engineer. Includes the laying, jointing and testing of the lines, and everything necessary to complete the work in readiness for operation.

1.02 SYSTEM DESCRIPTION

1.02.1 DESIGN AND PERFORMANCE REQUIREMENTS

A. Deflection. Polyvinyl Chloride (PVC) pipe installation shall be designed for not more than 5 percent deflection.

B. Pipe Stiffness. Minimum pipestiffness, in psi, measured at 5 percent deflection shall comply with the following table when tested in accordance with ASTM Designation D2412 (latest revision).

DR OR SDR	Min. E = 400,000 psi	Min. E = 500,000 psi
42	26	32
41	28	35
35	46	57
33.5	52	65
32.5	57	71
28	91	114
26	115	144
25	129	161
21	234	292
18	364	455
17	437	546
14	815	1019
13.5	916	1145

1.03 PAYMENT PROCEDURES.

A. Pipe and fittings shall be paid once they pass all tests and it is accepted (approved) by Engineer.

PART 2. PRODUCTS

2.01 MATERIALS

A. All Class 150 pipes shall meet the requirements of DR-18 and Class 200 meets the requirements of DR-14.

B. Class 150 (DR18) and Class 150 (DR 14) pipe shall comply with AWWA C900 - Standard for Polyvinyl Chloride (PVC) Pressure Pipe, 4 in. through 12 in., for water.

C. Class 100 (DR25) pipe shall comply with AWWA C905 - Standard for Polyvinyl Chloride (PVC) Water Transmission Pipe, Nominal Diameters 14 In. Through 36 In.

D. Polyvinyl Chloride (PVC) transmission pipe and fittings shall conform to the requirements of the latest revision of ASTM Specification D1784 (latest revision) with Bell and Spigot rubber ring joint providing a water tight joint. All fittings and accessories shall be as manufactured and furnished by the pipe supplier or approved equal and with bell and/or spigot configuration identical to that of the pipe. Polyvinyl Chloride (PVC) transmission and fittings shall conform to the following standards:

1. ASTM D618 - Standard Methods of Conditioning Plastic and Electrical Insulating Materials for Testing.

2. ASTM D1784 - Standard Specification for Rigid Poly (Vinyl Chloride) (PVC) Compounds and Chlorinated Poly (Vinyl Chloride) (CPVC) Compounds.

3. ASTM D2122 - Standard Method of Determining Dimensions of Thermoplastic Pipe and Fittings.

4. ASTM D2152 - Standard Test Method for Degree of Fusion of Extruded Poly (Vinyl Chloride) (PVC) Pipe and Molded Fittings by Acetone Immersion.

5. ASTM D2241 - Standard Specification for Poly (Vinyl Chloride) (PVC) Pressure-Rated Pipe (SDR series).

6. ASTM D2837 - Standard Method for Obtaining Hydrostatic Design Basis for Thermoplastic Pipe Materials.

7. ASTM D3139 - Standard Specification for Joints for Plastic Pressure Pipes Using Flexible Elastomeric Seals.

8. ASTM F477 - Standard Specification for Elastomeric Seals (Gaskets) for Joining Plastic Pipe.

9. NSF 14 - Plastic Piping System Components and Related Materials.

10. PPI TR-3 - Policies and Procedures for Developing Recommended Hydrostatic Design Stresses for Thermoplastic Pipe Materials.

11. PVC Pipe. AWWA Manual M23. AWWA, Denver, Colorado (1980).

Standard size of pipes meeting these requirements are:

Nominal Pipe Size (in.)		
DR 18 AWWA C900	DR 14 AWWA C900	DR 25 AWWA C905
4	4	14
6	6	16
8	8	18
10	10	20
12	12	24

E. Marking. Pipe in compliance with this specification shall be clearly marked on each section of pipe with the following information:

1. Nominal size and OD base (for example, 2 CI).

2. PVC

3. Dimension ratio (for example, DR 25).

4. AWWA pressure rating (for example, PR 165).

5. AWWA designation number for this standard (for example, AWWA C905).

6. Manufacturer's name or trademark.

7. Manufacturer's production code, including day, month, year, shift and plant.

F. Jointing System. The pipe and fittings shall be furnished with bell and spigot ends for joining with a solid, uniform cross-section rubber gasket as the sealing element. The rubber gasket shall meet the requirements of ASTM F477 (latest revision).

1. The joint shall provide a permanent seal against infiltration or exfiltration. The jointing technique shall be with elastomeric gasket. The elastomeric compound shall comply in all respects with the physical requirements specified in ASTM F477 (latest revision). The pressure rating of the joint whall not be less than pipe pressure rating and shall meet the performance requirements of ASTM D3139.

G. Size of pipes

2.02 SOURCE QUALITY CONTROL

A. Inspection. Testing of pipe shall be in accordance with ASTM D2152 (latest revision). The quality of all materials, the process of manufacture and the finished pipe shall be subject to inspection and approval by the Engineer, or other representative of the owner. Such inspection shall be made at the place of manufacture or on the work after delivery or at both places. The pipe shall be subject to rejection at any time on account of failure to meet any of the specification requirements, even though sample pipes may have been accepted as satisfactory at the place of manufacture.

1. PVC pipe which is stockpiled during long exposure (several months) to sunlight must be covered with canvas or other opaque material. Clear plastic sheet for covering of pipe may not be used. During storage air circulation should be provided for individual lengths of pipe should be stacked

in piles no higher than five feet. Pipe damaged due to improper storage will be rejected for use, by the Engineer.

2. All pipe and fittings to be installed under this item may be inspected at the plant for compliance with these specifications by an independent testing laboratory selected by the Owner. The Contractor shall require the manufacturer's cooperation in the inspection.

B. Rejected Specimens. The pipe rejected after delivery shall be marked for identification and shall be removed from the job at once.

PART 3. EXECUTION

A. The Contractor shall furnish and install Polyvinyl Chloride (PVC) water pipe and fittings and the sewer force main pipe and fittings, shown in the Construction Drawings or that may be ordered by the Engineer. The work to be done includes the laying, jointing and testing of the lines, and everything necessary to complete the work in readiness for operation.

B. Trench excavation and pipe layout shall be as specified in Section 02A092 "Trench Excavation for Pipe". Contractor shall implement the following special techniques.

1. Bell holes for Elastomeric Seal Joints. When the pipe being installed is provided with elastomeric seal joints, bell holes shall be excavated in the bedding material to allow for unobstructed assembly of the joint. Care should be taken that the bell hole is no larger than necessary to accomplish proper joint assembly. When the joint has been made, the bell hole should be carefully filled with bedding or haunching material to provide for adequate support of the pipe throughout its entire length. Bedding under bell holes shall have the same thickness as for the rest of the pipe.

2. Minimum Cover for Load Application. Provide at least 90 cm. (36 in.) of cover the top of the pipe before the trench is wheelloaded, and l.20 mt. (48 in.) of cover before utilization of a hydrohammer during compaction.

3. Use of Compaction Equipment. Take care to avoid contact between the pipe and compaction equipment. Compaction of haunching, initial backfill, and backfill material should generally be done in such way so that compaction equipment is not used directly above the pipe until sufficient backfill has been placed to ensure that such compaction equipment will not have a damaging effect on the pipe.

4. Pipe with spigot and bell. Before the pipe is lowered into the trench, the spigot and bell must be cleaned and free from dirt. Gasket and bell shall be lubricated by a lubricant, which is soluble in water, furnished by the pipe manufacturer and harmless to the rubber gasket. The pipe shall be properly aligned in trench to avoid any possibility of contact with the side of the trench and fouling the gasket. As soon as the spigot is centered in the bell or the previously laid pipe, it shall be forced home with jacks or come-alongs. After the gasket is compressed and before the pipe is brought fully home, each gasket shall be carefully checked for proper position around the full circumference of the joint. The jacks or come along shall be anchored sufficiently back along the pipeline so that the pulling force will not dislodge the pieces of pipe already in place.

5. PVC Pipe under streets and roads. The pipe shall not be installed under roads with less than three (3) feet of cover unless the installations is done acording to specific instructions indicated in the Construction Drawings, or indicated by the Engineer.

6. The pipe shall be laid true to line and grade. Force line curves shall be installed according to layout as shown in Construction Drawings or as directed by Engineer.

3.01 FIELD QUALITY CONTROL

3.01.1 SITE TESTS

A. Test After Laying. Polyvinyl Chloride (PVC) pipe lines shall be tested in sections. The maximum section size is the distance between two consecutive valves in the system. Smaller section sizes may be required by the Engineer. The section to be tested shall be closed by valves, temporary flanges, plugs or bulk heads, as required. The pipe line shall then be filled with water. A force pump with calibrated tank or barrel and pressure gauge shall be attached to the pipe line in a satisfactory and approved manner, using small outlets in the pipe or taps made in plugs, caps or fittings for this purpose.

1. By means of the force pump, the water pressure shall be raised to 150% of the working pressure not to exceed the pipe class specified in the Construction Drawings or as directed by the Engineer. The pressure shall be maintained at the point for a period of not less than two (2) hours, during which time the actual amount of water force in to the pipe line shall be determined by measurement in the calibrated tank or barrel, and this amount shall be taken as a basic for computing the leakage per twenty-four (24) hours.

2. While under test pressure, the leakage from all pipes, valves and fittings under test shall be in accordance to AWWA M23 (latest revision), which states.

The allowable leakage is $L = \frac{ND(P)^{1/2}}{7,400}$

L = allowable leakage, gph
N = number of joints in the length of pipeline tested
D = nominal diameter of pipe, in.
P = average test pressure during the leakage test, psi

If the leakage discovered on tests exceeds the amount specified the Contractor shall replace defective pipe, fittings, repair joints, tighten bolts, or do any other work necessary to reduce leakage to the specified amount and shall then re-test.

3. The Contractor shall furnish all labor, materials and equipment required for tests, including force pumps, calibrated tank or barrel, screw plugs for holes tapped in the pipes, connections and bracing the uncompleted work. The gauges required for test will be furnished by the Engineer.

B. Disinfecting and Flushing applicable for potable water lines.

1. Disinfect potable water lines using procedures and material conforming to AWWA C651.

2. Dosage to produce minimum 10 ppm after minimum of 24 hour contact period.

3. After treatment, flush with clean water until residual chlorine content less than 0.2 ppm.

4. Prevent contamination of water in existing water mains. Dispose of water used in disinfecting and flushing in acceptable manner.

SECTION 15C130
LOW PRESSURE REINFORCED CONCRETE PIPE NONCYLINDER TYPE WITH RUBBER GASKET AND STEEL JOINTS (GRAVITY)

PART 1. GENERAL

1.01 SUMMARY

1.01.1 SECTION INCLUDES

This section includes furnishing and installing all reinforced concrete pipes and fittings shown on the drawings or that may be ordered by the Engineer. The reinforced concrete pipe is the non cylinder and not prestressed. The work to be done includes the laying, jointing and testing of the lines, and everything necessary to complete the work in readiness for operation.

1.02 REFERENCES

A. AWWA Manual M9 "Concrete Pressure Pipe"

1.03 SUBMITTALS

1. The Contractor shall submit from the manufacturer certificates indicating that the sewer pipe complies with all the requirements of AWWA C302. He shall submit this certificates to the Engineer prior to the transportation of the sewer pipe ti the site of the project.

1.04 PAYMENT PROCEDURES.

A. Pipe and fittings shall be paid once they pass all tests and it is accepted (approved) by Engineer.

PART 2. PRODUCTS

A. Pipes shall be reinforced concrete and shall meet the requirement of the AWWA Designation C302. Standard reinforce concrete pipe nominal sizes in inches are 18, 21, 24, 27, 30, 36, 42, 48, 54, 60, 66, 72, 78, 84, 90, 96, 102, 108, and 120 inches.

B. All interior surfaces of the pipe shall be coated with an epoxy corrosion resistant coating. This coating shall be "Ceilgard 663" chemical resistant coating by Master Builders, In or approved equal.

C. Absence of defects. Pipes shall be substantially free from fraturers, large or deep cracks and blisters, laminations, and surface roughness.

D. Marking. The following information shall be clearly marked on each section of pipe.

1. The pipe class

2. The date of manufacture

3. The name of trademark of the manufacturer

4. Identification of the plant

Markings shall be indented on the pipe section or painted there on with waterproof paint.

E. Inspection. Each length of pipe shall be subject to inspection at the factory, trench, or other point of delivery by a competent inspector employed by the purchaser. The purposes of the inspection shall be to call and reject pipe which, independent of the physical tests herein specified, fails to conform to the requirements of these specifications.

1. Test at manufacturing plant. Concrete pipe and materials for the manufacture of the pipes, to be furnished for this project under this specification will be subject to the following tests at the manufacturing plant:

a) Three edge bearing test to produce 0.01 in crack

b) Pipe hydrostatic test

c) Mill certificate for the reinforcing steel

d) Concrete tests

1) Slumps test

2) Compression Test

e) Epoxy Coating Tests

f) Rubber or Synthetic Isoprene Gasket Tests

F. Repairs. Due to occasional imperfections in the manufacture of accidental damage during handling , pipes may be repaired. Will be acceptable if, in the opinion of the Engineer, the repairs are sound and properly finished band cured and the repaired pipe conforms to te requirements of these specifications. PRASA should be informed in advance of the pipes and fittings to be repaired.

PART 3. EXECUTION

A. The Contractor shall furnish and install all concrete sanitary sewer pipes and fittings shown on the drawings or that may be ordered by the Engineer. The work to be done includes the laying, jointing and testing of the lines of the sanitary sewer lines, and everything necessary to complete the work in readiness for operation.

B. Trench Excavation and Pipe Laying

1. Trench excavation and pipe laying shall be according to Section 02A092" Trench Excavation for Pipe".

2. Pipe shall be laid true to the lines and grades shown on plans, or given by the Engineer.

3. No pipe shall be laid in water, and shall not be permitted to rise over fresh joints. Upon suspension of work at any time, the Contractor shall close the ends of the pipe so that no dirt or rubbish may enter, and shall keep upon the work a suitable number of plugs or stoppers for this purpose.

4. Tile dub-drains, or any other means as directed by the Engineer, shall be provided by the Contractor to lower the water table and check excessive infiltration in pipe lines, at no additional cost over the prices bid for pipe.

5. Pressure Pipe. Pipe shall be laid according to AWWA Manual M9 "Concrete Pressure Pipe".

C. Pipe Joints. The joint shall be sealed by a rubber gasket in such a manner that it will remain tight under all conditions of service, including movement due to expansion, contraction and normal settlement. Each length of pipe shall be provided with bell and spigot ends formed by steel joint rings welded to the longitudinal reinforcement. The spigot ring shall be lined with concrete on its interior surface and the bell ring shall be covered with concrete on its exterior surface. Portions of the joint rings, which will be exposed after the pipe is manufactured, shall be protected from corrosion by an approved coating**.** The spigot ring shall have a grove for the purpose of receiving, holding and protecting the gasket. The joint surface shall be of such shape and dimensions that the joint will self-centering when the pipe is laid so that the gasket will not be required to support the weight of the adjoining pipe.

Steel plate for bell rings ¼" or more in thickness and special shapes for spigot joint rings shall conform to "Standard Specifications for Carbon Steel Bars Subject to Mechanical Property Requirements", Grade 50, ASTM Designation A306.

The gasket sealing the joint shall be made of a rubber having a texture to assure a watertight and permanent seal and shall be the product of a manufacturer having experience in the manufacture of rubber gaskets for pipe joints. The gasket shall be a continuos ring, of suitable cross-section and of such size as to fill the groove on the spigot joint ring when the pipes are laid. The rubber gasket shall be the sole element to depend upon to make the joint watertight and shall have smooth surfaces free from pitting, blisters, porosity and other imperfections. Each gasket shall be subjected to a stretch of 100% and examined for any defects while in the stretched condition. Cement mortar or plastic materials used to finish the joint shall not be depended upon for water-tightness.

Synthetic isoprene gaskets shall comply with the following physical requirements:

Tensile strength, min, psi	3000
Elongation at rupture, min. percent	425
Compression set, max. percent	20
Accelerated aging Tensile strength retained, min. percent of original	85
Elongation retained, min. percent of original	80
Water absorption Volume and weight increase, max. percent	5
Durometer hardness, points	50-65

The physical properties of the gasket shall be determined in accordance with the following methods:

Tensile Strength	Tension Testing of Vulcanized Rubber ASTM Designation: D412
Elongation	Tension Testing of Vulcanized Rubber ASTM Designation: D412
Compression Set	Compression Set of Vulcanized Rubber ASTM Designation: D395, Method B
Accelerated Aging	Oven Test for Aging of Rubber, ASTM Designation D573
Water Absorption	Changes in properties of Elastomeric Vulcanizates Resulting from Immersion in Liquids, ASTM Designation D471

Immediately before setting the pipe in the trench the spigot shall be thoroughly cleaned and coated with the approved lubricating soap. Following the application of the soap the rubber gasket shall be placed on the spigot and the spigot again lubricated with the soap. Prior to entering the spigot into the bell of the previous pipe, the bell shall be lubricated with the soap. The spigot shall then be entered into the previous pipe and forced home. In all cases the joints shall be made in strict accordance with instructions of the pipe manufacturer.

Pipe shall be tightly drawn together by a hand winch or other approved method so as to minimize movement and made a tight rigid joint.

Attention of the Contractor is specially called to the fact that tight joint and a smooth interior surface must be secured.

After each joint has been finished, the pipe shall be swabbed out with a suitable swab to the end that no obstruction may be left in the complete line.

D. Field test

E. The Contractor shall perform the test in Section 15C240 Sewer Pipe Test

F. Contractor shall locate and repair defective joints, pipes and oters, and retest until the tested values fall within specified limits.

3.02 CLEANING

Before final acceptance by the Engineer, the Contractor shall thoroughly clean all sewer pipelines of stones, earth, and pipe jointing material or other obstruction leaving them in a satisfactory operating condition.

SECTION 15C150
PRE-STRESSED CONCRETE CYLINDER PIPE WITH RUBBER AND STEEL JOINTS

PART 1. GENERAL

1.01 SUMMARY

1.01.1 SECTION INCLUDES

Section includes furnishing and laying all prestressed reinforced concrete, steel cylinder type pipe and fittings shown in the Construction Drawings or as specified herein. The work to be done includes the laying, jointing and testing of the lines, and everything necessary to complete the work in readiness for operation.

1.02 PAYMENT PROCEDURES.

A. Pipe and fittings shall be paid once they pass all tests and it is accepted (approved) by Engineer.

1.03 DELIVERY, STORAGE, AND HANDLING

1.03.1 STORAGE AND PROTECTION

A. Pipes. Shall be laid true to the lines and grades on the plans, or given by the Engineer, after careful dressing of the trench bottom and provision of a recess under each bell of ample size for making the joint. All stones, which would come in contact with the pipe, shall be removed and the lower third of each pipe carefully bedded in the earth for its full length.

PART 2. PRODUCTS

2.01 MATERIALS

A. Type of Pipe. The pipe shall be of the type known as Pre-stressed Concrete Cylinder Pipe, and shall meet the requirements of AWWA Standard C301, latest revision. It shall be reinforced which a welded steel cylinder with steel joint rings welded to its ends. The steel cylinder shall be lined with not less than 1" of concrete and the core wall will be according to the dimensions shown in plans. The core shall be wrapped with a high tensile strength wire under tension and coated with a dense cover of cement mortar or concrete. Each pipe shall be constructed with a self-centering expansion joint sealed with a rubber gasket and capable of caring for normal movement due to earth settlement and extremes of temperature.

B. Dimensions. The dimensions of the straight pipe shall be as indicated in plans. The pipe shall be round and true. The average internal diameter of the straight pipe shall not be less than the nominal diameter more than 1/2".

C. Pipe Design. The wire diameter used, its centerline spacing, and the pipe tension around the core shall be sufficient to produce the pre-stress in the core. The elastic and inelastic deformations of the concrete and steel shall be taken into consideration. The gross wrapping stress in the high tensile wire shall not exceed 75% of the ultimate tensile strength of the wire. The centerline spacing shall

be 1 1/2". Minimum centerline spacing of the wires shall be that which produces a clear distance between wires of 3/16". The minimum diameter of the wire used shall be No. 8 gage.

The core shall not be wrapped with the wire until the concrete has reached the specified seven day compressive strength. The initial compression in the concrete shall not exceed 55% of its compressive strength at the time of wrapping.

D. Pipe Joints. The joint shall be sealed by a rubber gasket in such a manner that it will remain tight under all conditions of service, including movement due to expansion, contraction and normal settlement. Each length of pipe shall be provided with bell and spigot ends formed by steel joint rings welded to the cylinder. The spigot ring shall be lined with concrete on its interior surface and the bell ring shall be covered with concrete on its exterior surface. Portions of the joint rings, which will be exposed after the pipe if manufactured, shall be protected from corrosion by an approved coating. The spigot ring shall have a grove for the purpose of receiving, holding and protecting the gasket. The joint surface shall be of such shape and dimensions that the joint will be self-centered when the pipe is laid so that the gasket will not be required to support the weight of the adjoining pipe.

Steel plate for bell rings 1/4" or rare in thickness and special shapes for spigot joint rings shall conform to "Standard Specifications for Carbon Steel Bars Subject to Mechanical Property Requirements", Grade 50, ASTM Designation A306, latest revision.

The gasket sealing the joint shall be made of a rubber having a texture to assure a watertight and permanent seal and shall be the product of a manufacturer having experience in the manufacture of rubber gaskets for pipe joints. The gasket shall be a continuous ring, of suitable cross-section and of such size as to fill the groove on the spigot joint ring when the pipes are laid. The rubber gasket shall be the sole element to depend upon to make the joint watertight and shall have surfaces free from pitting, blisters, porosity and other imperfections. Each gasket shall be subjected to a stretch of 100% and for any defects while in the stretched condition. Cement mortar or plastic materials used to finish the joint shall not be depended upon for watering.

E. Synthetic isoprene gaskets shall comply with the following physical requirements:

Tensile strength, min, psi	3000
Elongation at rupture, min. percent	425
Compression set, max. percent	20
Accelerated aging, tensile strength retained, percent of original	85
Elongation retained, min. percent of original	80
Water absorption, Volume and weight increase, max. percent	5
Durometer hardness, points	60±5

Immediately before setting the pipe in the trench the spigot shall be thoroughly cleaned and coated with the approved lubrication soap. Following the application of the soap the gasket shall be placed in spigot and the spigot again lubricated with the soap. Prior to entering the spigot into the bell of the previous pipe, the bell shall be lubricated with the soap. The spigot shall then be entered into the previous pipe and forced home. In all cases the joints shall be in strict accordance with instructions of the pipe manufacturer.

Pipe shall be tightly drawn together by a hand winch or approved method so as to minimize the movement and make a tight rigid joint.

After each joint has been finished, the pipe shall be swabbed out with a suitable swab to the end that no obstruction may be left in the completed line.

F. Steel Cylinder. The steel cylinder shall be made of hot rolled steel sheets not lighter than 16 gage U.S. standard and conforming to the requirements of “Standard Specifications for Hot-Rolled Carbon Steel Sheets and Strip, Structural Quality", Grade C, ASTM Designation A570, latest revision.

Each completed cylinder with joint rings, welded to its ends, shall be subjected to a hydrostatic test by closing the ends at the joint rings; filling with water in contact with welds at all points; and raising the water pressure to produce a stress of 20,000 to 25,000 psi in the cylinder. While under pressure test, all welds shall be thoroughly inspected. If any leaks are found, they shall be repaired and the cylinder shall be retest. The finished cylinder, with joint rings attached, shall be watertight under the required test pressure. Welding shall be by an approved process and test welds shall be furnished from the work as required.

G. Steel Reinforcement. The wire used for pre-stressing shall conform to the requirements of “Standard Specifications for Hard-Drawn Steel Mechanical Spring Wire", ASTM Designation A227, latest revision and "Standard Specification for Steel Wire, Hard-Drawn for pre-stressing Concrete Pipe", ASTM Designation A648, latest revision.

H. Concrete. Cement shall fulfill the requirements of "Standard Specification for Portland Cement", ASTM Designation C150, latest. revision. Concrete aggregates shall be composed of hard durable particles, clean and free from loam or organic materials. Water used in the mixing the concrete shall be clean and free from deleterious amounts of acids, or organic materials.

The concrete used in the manufacture of the pipe shall consist of cement, sand and crushed stone or crushed or uncrushed gravel accurately proportioned for density and specified strength. In no case shall the cement content be less than 564 lbs. (6 bags) per cubic yard in the finished product.

The concrete shall be placed in steel molds so constructed that the inner and outer forms, joint rings and cylinder shall be held in circular and concentric positions. The molds shall be vibrated during the placing of each batch of concrete. The concrete shall have a minimum strength of 3000 psi at seven days and 4500 psi at 28 days as measured by 6" x 12” companion cylinders molded in accordance with the "Standard Method for Making and Curing Concrete Compression and Flexure Test Specimens in the Field", ASTM Designation C31, latest revision and cured in the same manner and for the duration as the pipe. To conform to the requirements of this section, the average of any ten consecutive strength tests of cylinders representing each type of concrete shall be equal to or

greater than the specified strength and not more than 20% of the strength tests shall have values less than the specified strength.

I. Curing concrete. Curing shall be by either steam or water. The use of water shall be limited to times when the temperature in the curing enclosure is continuously above 40°F. Adequate facilities and space shall be provided for proper curing.

1. Steam Curing. The cores shall be placed in the steam curing or otherwise covered by a suitable enclosure that will allow proper circulation of steam. A delay period from 1 to 4 hours shall be allowed before moist steam is admitted in contact with the cores. The temperature with the enclosure shall be gradually raised to at least 110°F and not more than 150°F for a period of at least 24 hours. The present tire shall be included in 24 hours period. Curing by steam shall be continuous, except during a period sufficient to remove the forms or supporting rings.

The forms shall not be until at least 6 hours after the beginning of steam curing. Following this minimum period, in lieu of further steam curing, the cores may be "tipped" from their bases and to the storage yard, where they shall be kept continuously moist by intermittent spraying for a period of at least 5 days.

2. Water Curing. The core shall be kept moist by water spraying for a period of 32 hours. The forms shall not be removed from the core until at least 12 hours after beginning of curing. After being placed in the storage yard, the core shall be kept mist by intermittent sprinkling for a further period of three days.

J. Pipe Coating. The coating, either cement mortar or concrete shall be applied to the cores after they have been wrapped under tension with high tensile wire.

K. Cement Mortar Coating. The mortar used for this coating shall consist of one part of cement to not more than 3 parts of the fire aggregates measured by volume. The mortar shall be placed on the pipe by a machine in which the mortar, previously mixed, is driven against exterior surface of the core to produce a dense coating around the pre-stress. The thickness of coating, measured from the outer surface of the core, shall not be less than that specified.

L. Concrete Coating. The concrete used for this coating shall be so proportioned that the cement content is not less than 658 lbs. (7 bags) per cubic yard. The concrete shall be placed in steel molds so constructed that the outer from and the core shall be held in circular and concentric positions. The molds shall be continuously vibrated during the placing of each batch of concrete.

The thickness of coating shall not be less than 1".

M. Curing of Coating.

1. Steam Curing. The coated pipe shall be placed in the curing as soon as practicable after placing the coating and shall be steam-cured as specified under Curing of Concrete for a period of at least 12 hours. The pipe shall be handled in such as to avoid injury to the coating during transportation to and from the curing chamber.

2. **Water Curing**. As soon as the coating has set sufficiently, it shall be kept moist by continuous water spraying or by intermittent spraying and burlap and canvas covering for a period of at least 4 days.

N. Curves and Fittings. Curves of long radius may be formed by the deflection of each joint, by the use of pipe which the spigot joint rings are placed on a bevel or by bevel adapters. Fittings shall be designed to provide the same Strength as the adjacent pipes. Elbows tee reducers and wyes shall be of non-pre-stressed steel cylinder type construction. Branch connections or openings such as manholes, air valves and blowouts may be incorporated in straight pipe and shall be suitably reinforced. Fittings shall be provided with joint rims corresponding to those on adjoining straight pipes. Special adapters shall be provided where to required to connect to valves or pipes of other manufactures.

O. Pipe shall be laid true to the lines and grades shown on the plans, or given by the Engineer, after careful dressing of the trench bottoms and provision of a recess under each bell of ample size for making the joint. All stones, which would be exposed to the pipe, shall be removed and the lower third of each pipe carefully bedded in the earth for its full length.

No pipe shall be laid in water, and shall not be permitted to rise fresh joints. Upon suspension of work at any time, the Contractor shall close the ends of the pipeline so that no dirt or rubbish may enter. Also shall keep upon the work a suitable number of plugs or stoppers for this purpose.

Tile sub-drains or any other as directed by the Engineer, shall be provided by the Contractor to lower the water table and check excessive infiltration on pipelines. at no additional cost over the prices bid for sewer pipe.

P. Absence of Defects. Pipes shall be substantially free from fractures, large or deep cracks and blisters, laminations, and surface roughness.

Q. Markings. The following information shall be clearly marked on each on of pipe:

1. The pipe class

2. The date of manufacture

3. The name or trademark of the manufacturer

4. Identification of the plant

Marking shall be indented on the pipe section or painted there on with waterproof paint.

R. Inspection. Each length of pipe shall be subject to inspection at the factory, trench, or other point of delivery by a competent inspector employed by the purchaser. The purposes of the inspection shall be to call and reject pipe which, independent of the physical tests herein specified, fails to conform to the requirements of these specifications.

All rejected pipes shall be plainly marked by the inspector and shall be replaced by the manufacturer or seller with pipe that will meet the requirements of these specifications, without additional cost to the purchaser.

S. Repairs. Pipe may be repaired, if necessary, because of occasional sections in manufacture or accidental injury during g and will be acceptable if, in the opinion of the purchaser, the repairs are sound and properly finished and cured and there pipe conform to the requirements of these specifications.

If the leakage discovered on test exceeds the amount specified the Contractor shall replace defective pipe, fittings, repair joints, tighten bolts, or do any other work necessary to reduce leakage to the specified amount and shall then re-test.

The Contractor shall furnish all labor, materials and equipment for tests, including force pumps, calibrated tank or barrel, screw plugs for holes tapped in the pipes, connections and bracing the uncompleted work. The gauges for test will be furnished by the Engineer.

PART 3. EXECUTION

A. The Contractor shall furnish and lay all pre-stressed reinforced concrete, steel cylinder type pipe and fittings shown in the Construction Drawings or as specified herein. The work to be done includes the laying, jointing and testing of the lines, and everything necessary to complete the work in readiness for operation.

B. Pipe shall be laid, field tested accordingly AWWA Manual M9 “Concrete Pressure Pipe”. Testing shall be tested in sections. The maximum section size is the distance between two consecutive manholes or registers in the system. Smaller section sizes may be required by the Engineer. Contractor shall provide all labor, matereials and other for the field testinh of land pipe.

C. If pipe is to be used for potable water it shall be desinfected according to AWWA C651, Desinfecting Water Mains.

.

SECTION 15C155
PRE-STRESSED REINFORCED CONCRETE STEEL CYLINDER PIPE (GRAVITY)

PART 1. GENERAL

1.01 SUMMARY

1.01.1 SECTION INCLUDES

Under this section the Contractor shall furnish, deliver, handle, store, protect and perform all work necessary for installing, joining and testing pre-stressed concrete pipe, fittings and accessories required for this project, including everything necessary to complete the work in readiness for operation.

1.02 SYSTEM DESCRIPTION

1.02.1 DESIGN REQUIREMENTS

A. Marking. The Contractor shall mark plainly on the bell end of each length of pipe and each special fitting the head for which the pipe is designed, the date of manufacture and sufficient marks of identifications to show its proper location in the line with reference to the layout drawings and schedules which the contractor has prepared in his work procedure. All beveled pipes shall be marked with the amount of the bevel.

B. Cement. Cement use in the manufacture of the pipe shall conform to the "Standards Specifications for Portland Cement" of the American Society for Testing Materials, ASTM Designation: C 150-60 Type I.

C. Beveled Ends. The Contractor shall furnish beveled – end pipe as may be required to facilitate pipe laying operations, beveled ends shall be equal to those shown on Table 304, Section 3 – Page 2, of the Engineer Manual of the Lock Joint Pipe Company.

1.03 SCHEDULING

A. Layout Schedule. The Contractor will be furnished with detailed plans and profiles for the water main, and shall inform in regard of the installation method and schedule of installation.

PART 2. PRODUCTS

2.01 MATERIALS

A. Pipes and Fittings.

1. This pipe shall conform to the "AWWA Standard for Reinforced Concrete Water Pipe–Steel Cylinder Type, Pre-stressed" of the American Water Works Association Standard No. C-301, of latest revision.

2. The pipe shall be of the type known as Pre-stressed Concrete Cylinder Pipe. This pipe shall consist of a continuous ARC-Welded steel cylinder with steel joint rings welded to its end, lined

with concrete, wrapped under tension with a wire of high tensile strength and coated with a dense covering of cement mortar. Each pipe shall be constructed with a self-centering expansion joint, sealed with a suitable gasket, and capable of supporting the earth pressure shown on the plans, settlements and extremes of temperature.

3. All pipe and fittings shall have a bituminous seal coating applied to the interior surfaces. The material used and the method of application shall comply with the applicable provisions of the "American Standard Specifications for Cement Mortar Lining for Cast Iron Pipe and Fittings", American Standards Association A21.4, of latest revision, American Water Works Association C-104, of latest revision, relating to bituminous seal coating. The seal coating shall be applied in all instances after the pipe has been cured.

B. Special Pieces and Fittings.

1. The Contractor shall furnish all fittings, bends and special pieces for closures, branches, manholes, air-valve and blow-off connections and connections to mainline valves, where necessary. Unless otherwise permitted or required, openings for branches, manholes and other connections to existing pipes shall be built into walls of the pipe.

2. This shall be done by welding fittings of cast steel or structural steel of suitable design into the cylinder of the main pipe, welding or otherwise securely attaching them to the other reinforcement of the pipe, before the pipe is molded, and surrounding them with sufficient reinforcement to give the required strength. Special pipes shall be provided with joint rings corresponding to those on the straight pipes. Special ends shall be provided on the concrete pipe or specials where required to connect to valves or other type of pipe.

C. Curves and Bends. Short radius bends shall be formed by bends of the same type of construction as straight pipe, except that the cylinder sheets shall be cut and welded to the necessary shape to produce the proper shaped curve or bend. Long radius curves may be formed by beveling one end of the pipe, but the total angular deflection shall not exceed five (5) degrees at any joint. Slight deflections may be made with straight pipe.

D. Joints. Joints on reinforced concrete pressure pipe shall be bell and spigot type formed by steel joint rings securely fastened in the pipe wall, and sealed with a rubber gasket. The spigot ring shall have a groove for the purpose of receiving, holding and protecting the gasket, and the joints shall be self-centered so that the gasket will not support the weight of the adjoining pipe.

E. Reinforcement.. The Contractor shall submit for approval the calculations for the determination of the details of the pipe reinforcement prior to the manufacture of any pipe.

F. Seal Coating. All pipe and fittings shall have a bituminous seal coating applied to the interior surfaces. The material used and the method of application shall comply with the applicable provisions of the "American Standard Specifications for Cement Mortar Lining for Cast Iron Pipe and Fittings", American Standard Association A21.4-1964, American Water Works Association C104-64, relating to bituminous seal coating. The seal coating shall de applied in all instances after the pipe has been cured.

G. Harnessed Joints.

1. Harnessed joints shall be provided in the numbers ordered by the Engineer.

2. Harnessed joints may be of the welded type or of the clamp type, subject to the approval of the Engineer. The Engineer reserves the right to make such investigations as he may deem necessary to satisfy himself that the pipe of joint proposed by the Contractor is satisfactory and acceptable for the purpose. No harnessed joint will be accepted which has not been in successful use under similar conditions elsewhere.

H. Removable Sections. The Contractor shall furnish special sections of pipe as required, which shall be designed to permit quick removal and replacement of the sections to facilitate future cleaning of the pipe line. The sections shall be such as to provide a clear opening of eight (8) feet in the pipe line to permit the entrance of pipe cleaning equipment.

I. Closure Assemblies. The Contractor shall furnish suitable closure assemblies as may be required to facilitate pipe-laying operations.

J. Elbows. Elbows shall be similar and equal to those shown on Table 288, Sheet 1 to 2, Section 5, Page 2 of the Engineering Manual of the Lock Joint Pipe Co.

K. Blow-Off Assemblies. Each blow-off assembly shall be approved equal to that shown on Table 294, Section 11, Page 3 of the Engineering Manual of the Lock Joint Pipe Co. The outlet size shall be as shown in the Construction Drawings. The assembly shall include the special sixty (60) degree flanged bend designed for the working pressure.

L. Air Valve Connections. Air valve connections shall consist of a cast steel outlet tapped for a standard pipe thread of diameter stated. The cast steel outlet shall be built into the wall of the reinforced concrete pipe, as shown on Table 293, Section 11,Page 2 of the Engineer Manual of the Lock Joint Pipe Co.

M. Accessories for Joining.

1. The Contractor shall furnish and deliver all materials and accessories, including diaper paper and mortar, required for jointing the reinforced concrete pressure pipe. These materials shall include all gaskets and soap solution needed for placing the gaskets on the pipe.

2. The Contractor shall furnish certified test reports of the physical properties of the rubber used in the gaskets for the approval of the Engineer.

2.02 SOURCE QUALITY CONTROL

2.02.1 TESTS

A. Yard Internal Pressure Test.

1. The hydrostatic test described under the standards AWWA-C-301 for Pre-stressed Concrete Pressure Pipe, Steel Cylinder Type for Water and other liquids shall be performed by Contractor under the supervision of the Engineer.

2. Minor cracking of the pipe of the hair-crack type occurring during the test will not be cause for rejection of the pipe, provided that continuos cracks shall not exceed five one thousandths (0.005") inch in width and two (2) feet in length.

3. In the event that a pipe fails to withstand such test, the Contractor shall have the right to test two (2) other sections of pipe selected at random by the Engineer from the same lot as that from which the original pipe was selected. If these two (2) pipes successfully pass the test, the remainder of the lot may be accepted. If either fails, the remainder of the lot cannot be accepted until each pipe has satisfactorily passed the test.

B. Mills Test Reports. The Contractor shall furnish, in advance of the manufacture of steel for cylinders and reinforcing, mill test reports of each heat form which the steel is rolled.

PART 3. EXCECUTION

3.01.GENERAL**.**

A. The Contractor shall furnish, deliver, handle, store, protect and perform all work necessary for installing, joining and testing the pre-stressed concrete pipe, fittings and accessories required for this project, including everything necessary to complete the work in readiness for operation.

3.02.FELD QUALITY CONTROL

3.02.1. SITE TESTS

A. Test Bulkheads. The Contractor shall furnish test bulkheads for the reinforced concrete pressure main pipe line. Bulkheads shall be of steel construction and shall be of bell, cap and spigot plug design, adequate for the highest test pressures required by the tests to be performed.

B. Test Procedure for Pipes Under Gravity Working Conditions. Contractor shall test the pipe according to Section 15C240 title Sewer Pipe Test.

C. Contractor shall locate and repair defective joints, pipes and others, and retest until the tested values fall within specified limits.

SECTION 15C190
CHEMICAL PIPING AND APPURTENANCES

PART 1. GENERAL

1.01 SUMMARY

1.01.1 SECTION INCLUDES

A. This section includes furnishing, delivering, hauling, storing, protecting, assembling, erecting, installing, adjusting, painting, testing, placing in satisfactory operation and guaranteeing all chlorine gas and solution piping, all chemical solution piping, non-potable water piping, valves, controls and fittings; complete with accessories, vent piping and appurtenances for chemical feed equipment, within the limits of the planes formed by the projection of the outside faces of the outside walls of structures; not specifically otherwise provided for and which are called for in the Construction Drawings, specified and required by the equipment actually furnished.

1.02 PAYMENT PROCEDURES.

A. Pipe and fittings shall be paid once they pass all tests and it is accepted (approved) by Engineer.

1.03 DELIVERY, STORAGE, AND HANDLING

A. Handling Materials. Proper and suitable tools for safe and convenient handling and laying of pipes, fittings and valves shall be used. Care shall be taken to prevent the protective coatings from becoming damaged. Pipe and accessories shall be carefully placed by means of cranes, ropes or other suitable equipment, in such manner as to prevent damage to the pipe. Under no circumstances shall pipe or accessories be dropped or dumped. Care shall be exercised to avoid bumping pipe already in place.

PART 2. PRODUCTS

A. Pipe and Fittings (Cast Iron and Ductile Iron). Cast iron pipe shall conform with the applicable requirements of the "American National Standard for Cast Iron Pipe Centrifugally Cast in Metal Molds, for Water or Other Liquids" of the American National Standards Institute, Designation: ANSI A21.6, and the American Water Works Association, Designation: AWWA C106, or of the "American National Standard for Cast Iron Pipe Centrifugally Cast in Sand-Lined Molds, for Water or Other Liquids" of the American National Standards Institute, Designation: ANSI A21.8 and the American Water Works Association, Designation: AWWA C108.

The thickness of pipe shall be not less than that shown in the following table:

Nominal Diameter Inches (mm)	Minimum Thickness Inches (mm)
3 (80)	0.32 (8.1)
4 (100)	0.35 (8.9)
6 (150)	0.38 (9.7)

Ductile iron pipe shall conform with the applicable requirements of the "AWWA Standard for Ductile-Iron Pipe, Centrifugally Cast in Metal Molds or Sand-Lined Molds for Water or Other Liquids" of the American Water Works Association, Designation: AWWA C151 and also the American National Standards Institute, Designation: ANSI A21.51 and with the applicable requirements specified for cast iron piping, fittings and appurtenances.

Ductile-iron pipe shall be not less than Class 53 thickness.

All joints shall be flanged, except where specifically designated otherwise. Flanged joints shall conform to the applicable requirements of the "American National Standard for Cast Iron Pipe Flanges and Flanged Fittings, 25, 125, 250 and 800 lb." of the American National Standards Institute, Designation: ANSI B16.1. Flanges and drilling shall conform to the provisions therein as shown in the following table.

Nominal Diameter of Pipe Inches (mm)	Diameter of Flange Inches (mm)	Diameter of Bolt Circle Inches (mm)	Number of Bolts	Size of Bolts Inches (mm)
3 (80)	7-1/2 (190.5)	6 (152.4)	4	5/8 (15.9)
4 (100)	9 (228.6)	7-1/2 (190.5)	8	5/8 (15.9)
6 (150)	11 (279.4)	9-1/2 (241.3)	8	3/4 (19.0)

Bell and spigot joints and plain ends for pipe shall conform with the applicable requirements of the American National Standards Institute applying to the pipe being furnished.

Spigot or plain ends of pipe for coupling joints shall be prepared strictly in accordance with the requirements and instructions of the manufacturer of the coupling to be used.

Push-on joints and mechanical joints shall conform the requirements of the "American National Standard for Rubber Gasket Joints for Cast Iron and Ductile Iron Pressure Pipe and Fittings", American National Standard Institute Designation: ANSI A21.11, American Water Works Association, Designation: AWWA C111.

Fittings for bell and spigot push-on, mechanical and plain end pipe shall be bell fittings, unless otherwise designated herein or shown in the Construction Drawings. They shall conform with the requirements of the "American National Standard For Gray-Iron and Ductile-Iron Fittings 2 in. through 48 in. for Water and Other Liquids" of the American National Standards Institute, Designation: ANSI A21.10 (latest edition), and the American Water Works Association, Designation: AWWA C110. The class of fittings used shall in all cases, provide a bell of sufficient diameter to fit the spigot end of the pipe used. Unless specified or indicated otherwise, fittings for pipe twelve (12") inches (310 mm) in diameter and smaller shall be Pressure Rating 250 and fittings for pipe larger than twelve (12") inches (310 mm) in diameter shall be Pressure Rating 150.

Fittings for flanged pipe shall comply with the applicable requirements of the "American National Standard for Cast Iron Pipe Flanges and Flanged Fittings 25, 125, 250 and 800 lb." of the American National Standards Institute, Designation: ANSI B16.1, unless otherwise shown in the Construction Drawings. Unless specified or indicated otherwise, fittings for pipe twelve (12") inches (310 mm) in diameter and smaller shall be Class 250 and fittings for pipe larger than twelve (12") inches (310

mm) in diameter shall be Class 150. Unless specified or indicated otherwise, all flanges shall be Class 125 and drilled in accordance with the requirements therefor.

All cast iron pipe and fittings shall receive an outside coating conforming with the requirements of AWWA C106 and shall be cement-lined and receive a bituminous seal coat, in accordance with the requirements of the "American National Standard for Cement-Mortar Lining for Cast Iron Pipe and Fittings for Water", American National Standards Institute, Designation: ANSI A21.4, American Water Works Association, Designation: AWWA C104. The outside coating shall be of either coal tar or asphalt base approximately one (1) mil thick (0.025 mm). Sufficient quantities of coating material shall be supplied by the manufacturer for repairs to the coating in the field. Exposed pipe and fittings to be painted and pipe and fittings to be encased in concrete shall not receive and outside coating.

B. Pipe and Fittings (Copper). Copper tubing shall be Type "K", hard-temper, seamless tubing furnished in straight lengths. It shall comply with the applicable requirements of the "Standard Specification for Seamless Copper Water Tube" of the American Society for Testing and Materials, ASTM Designation: B88. Fittings shall be wrought copper, with silver ends, meeting the requirements of "American National Standard for Wrought Copper and Bronze Solder-Joint Pressure Fittings" of The American National Standards Institute, ANSI Designation: B16.22. Joints shall be silver soldered. Solder shall conform to the applicable requirements of the "Standard Specification for Solder Metal" of the American Society for Testing and Materials, ASTM Designation: B32.

The service fittings for connection of the copper non-potable water lines to the cast iron non-potable water lines shall be Model B-10026 as manufactured by Mueller Co. or approved equal.

Where threaded pipe connections are required and approved by the Engineer, the Contractor shall furnish and install brass soldering nipples Model Nos. P-4370 and F-374 as manufactured by Cast Iron Pipe & Foundry Division, James B. Clow & Sons, Inc.; Mueller Co. or approved equal.

C. Pipe and Fittings (Thermoplastic). Thermoplastic pipe and fittings shall be manufactured of polyvinyl chloride (PVC) and shall be particularly adapted to the service for which it is to be used. PVC pipe shall be rigid, tough, and corrosion-resistant, of the high-strength and low-creep type. It shall conform in all respects to the dimensions, tolerances and other requirements of the "Standard Specification for Poly (Vinyl Chloride) (PVC) and Chlorinated Poly (Vinyl Chloride) (CPVC) Plastic Pipe, Schedules 40, 80 and 120" of the American Society for Testing and Materials, ASTM Designation: D1785, for Schedule 80, Class 12454-B pipe, except as modified herein. Pipe fittings shall be produced from a compound, Class 12454-B, the base resin of which shall be virgin PVC. The compound shall not contain any reclaimed material whatsoever.

The PVC pipe and fittings used shall be furnished by a reputable manufacturer, whose product has proven satisfactory in operation under similar circumstances and operating conditions.

Pipe and fittings used must have provided satisfactory service in operation under similar operating conditions.

Unless otherwise shown in the Construction Drawings or specified elsewhere all polyvinyl chloride piping shall have flanged joints. Flanges shall be of the welded socket type. Threaded joints are not acceptable.

Solvent cement to be used for jointing flanges to pipe and fittings shall conform with the applicable requirements of "Standard Specification for Solvent Cements, for Poly (Vinyl Chloride) (PVC) Plastic Pipe and Fittings" of the American Society for Testing and Materials, ASTM Designation: D2564.

Teflon parts shall be fabricated of TFE-fluorocarbon resins (tetrafluoethylene polymers) and shall comply with the applicable portions of "Standard Specification for Polytetrafluoroethylene Granular Molding and RAM Extrusion Materials" of the American Society for Testing and Materials, ASTM Designation: D4894 and “Standard Specification for Polytetrafluoroethylene Resin Produced from Dispersion”, ASTM Designation: D4895 .

Pipe ends for couplings shall be furnished with cemented grooved collars conforming to the requirements of the manufacturer of the pipe actually furnished and the requirements of the manufacturer of the coupling actually furnished.

D. Pipe and Fittings (Polyethylene). Polyethylene pipe shall be clear plastic and shall be supported throughout its entire length in an approved manner in continuous aluminum channel troughs and with hangers. It shall not be allowed to sag so as to prevent the accumulation of lime deposits. Cleanouts shall be provided at bends and in straight runs of piping at no more than fifteen (15) meter intervals such that all sections of the piping may be conveniently cleaned.

Polyethylene pipe shall conform to the requirements of the "Standard Specification for Polyethylene (PE) Plastic Pipe (SDR-PR)” of the American Society for Testing and Materials, ASTM Designation: D2239. Fittings for polyethylene pipe shall be rigid, high-impact, molded plastic, insert type fittings suitable for use with the solutions being pumped.

Polyethylene pipe and fittings shall be designed for an internal pressure of not less than eighty (80#) pounds per square inch (0.55 MPa).

E. Pipe and Fittings (Steel): Steel pipe shall conform in all respects to the requirements of the "Standard Specification for Black and Hot-Dipped Zinc-Coated (Galvanized) Welded and Seamless Steel Pipe for Ordinary Uses" of the American Society for Testing and Materials, ASTM Designation: A120.

All steel pipe and fittings shall be galvanized, except for chlorine gas and chlorine liquid piping which shall be black, and other steel piping specifically indicated in the Construction Drawings as being black. Steel pipe and fittings for chlorine gas and chlorine liquid piping shall be extra-heavy and shall be used with flanged ammonia type unions. All other steel pipe shall be standard weight.

Malleable iron fittings for use with steel pipe shall the galvanized, except as specified and shall conform in all respects to the requirements of the "Standard Specification for Malleable Iron Castings" of the American Society for Testing and Materials, ASTM Designation: A47.

F. Gate Valves. Gate valves three (3") inches (80 mm) in diameter and larger, shall be iron-body, bronze-mounted, double-disc gate valves conforming to the applicable requirements for the "AWWA Standard for Gate Valves - 3 in. through 48 in. for Water and Other Liquids” of the American Water Works Association, Designation: AWWA C500, proportioned for a working water pressure of not less than one hundred and fifty (150#) pounds per square inch (1.03 MPa) and tested

at a water pressure of not less than three hundred (300#) pounds per square inch (2.06 MPa). Gate valves shall be as manufactured by American-Darling Valve & Manufacturing, a Division of American Cast Iron Pipe Company; A.P. Smith Mfg. Company or approved equal.

Gate valves smaller than one and one-half (1-1/2") inches (38.1 mm) in diameter shall be solid bronze. Those of one and one half (1-1/2") inches (38.1 mm) in diameter and less than three (3") inches (80 mm) in diameter shall be iron-body, bronze-mounted gate valves conforming insofar as possible with the requirements specified for gate valves three (3") inches (80 mm) in diameter and larger. They shall be fitted with screwed ends and with handwheels or operating nuts as required, and shall be furnished complete with pipe nipples where required and necessary for a complete assembly. Gate valves of the sizes specified shall be as manufactured by Chapman Division, Crane Company; American-Darling Valve & Manufacturing Company, a Division of American Cast Iron Pipe Company; A. P. Smith Mfg. Co. or approved equal.

G. Check Valves. Check valves for use in the pump discharge lines handling lime, carbon and fluoride solutions shall be ball type manufactured from polyvinyl chloride (PVC) Class 12454-B of the sizes called for in the Construction Drawings and as manufactured by Celanese Piping Systems, Inc., a Subsidiary of Celanes Corporation; Plastic Piping System, Inc. or approved equal.

All check valves shall proportioned for a working pressure of not less than one hundred and fifty (150#) pounds per square inch (1.03 MPa).

H. Thermoplastic Ball Valves. Thermoplastic ball valves shall be manufactured of polyvinyl chloride material with Teflon seats and Buna-N or Viton seals. They shall be externally adjustable, quarter-turn, full-port type, providing positive shutoff. They shall be Chemtrol TU Series True Union Ball Valves as manufactured by Celanese Piping System, Inc., a Subsidiary of Celanese Corporation; Plastic Piping Systems, Inc. or approved equal. Valves shall have socket ends.

I. Cast Iron Short Pipes. All cast iron short length pipes shall be in accordance with the specification for cast iron pipes.

J. Float Valves. The float valve shall be No. 2124 float valve as manufactured by the Cla-Val Co. of Newport Beach, California, or approved equal.

The float valve shall be pilot controlled, diaphragm actuated, spring loaded, single seated, hydraulically operated, with resilient disc. Seat shall be renewable and diaphragm and disc replaceable without removing valve from the line, valve stem shall be non-magnetic stainless steel. The float valve shall have flanged ends. Valve shall have no external packing glands or stuffing boxes.

The float valve shall open wide when float is at low liquid level and close drip-tight when float is at high liquid level.

Leakage or other defects due to faulty design, poor workmanship, or other causes, which may be found after the valves are installed and operated shall be made good by the Contractor at his own expense.

All valves shall be placed accurately in the position shown or required, with the outlet and the inlet in the correct direction. Joints shall be as for Cast Iron Pipe and Fittings, and all material for making joints shall be included in the price bid. Joints shall be tested and be perfectly tight.

Float valves shall receive one (1) priming coat and two (2) finish coats of Bitumastic No. 50 paint as manufactured by Koppers Company, or approved equal.

PART 3. EXECUTION

A. Contractor shall furnish, deliver, haul, store, protect, assemble, erect, install, adjust, paint, test, place in satisfactory operation and guarantee all chlorine gas and solution piping, all chemical solution piping, non-potable water piping, valves, controls and fittings, complete with accessories, vent piping and appurtenances for chemical feed equipment, within the limits of the planes formed by the projection of the outside faces of the outside walls of structures, not specifically otherwise provided for and which are called for in the Construction Drawings, specified and required by the equipment actually furnished. The Contractor shall furnish and install the chemical feed piping in the chemical pipe conduit installed.

Except as specified all materials and workmanship for chemical piping and appurtenances shall comply with the applicable requirements specified under this section.

B. Cutting and Threading Pipe. Pipe shall be cut by means of pipe saws, pipe cutters or other approved means which will produce a clean true cut, free from irregularities, smooth and at right angles to the axis of the pipe. In planning his work, the Contractor shall exercise care to minimize the number of cuts required and to avoid wasting pipe.

Before threading, all burrs shall be removed by filing and reaming, leaving the end of the pipe smooth and in a proper condition for threading. Threads shall be cut to conform to the Briggs standard with sharp-threading tools so as to produce a smooth, continuous thread.

C. Installing Pipe and Fittings. All pipelines, unless otherwise specifically noted, shall be run in straight lines parallel to floors and walls, neatly and securely fastened or supported wherever required to produce a first-class job. Fittings with imperfect threads shall not be used. All joints shall be made up so as to bring the pipe into perfect alignment without springing the sections into place.

In jointing pipe, care shall be exercised to avoid forcing the pipe into fittings. Tight joints shall be secured by adequate threading. No wrenches with broken or poorly fitted jaws shall be used and great care shall be exercised to prevent injury to the surface of the pipe.

All joints shall be made in strict conformity with the requirements of the manufacturer.

All pipes shall be carefully examined for defects and no piece shall be installed which is known to be defective. If any defective piece is discovered after having been installed, it shall be removed and replaced with a sound one at the expense of the Contractor.

All pipes and fittings shall be thoroughly cleaned before they are installed and shall be kept clean until they have been accepted in the completed work.

The Contractor shall exercise care in planning the work to arrange for the proper setting of all fittings, valves and other appurtenances required in the completed pipelines. Where pipes pass through walls or floors, sleeves that will provide for expansion shall be inserted in the masonry. Unions shall be frequently used to provide for the easy removal of any section of the line. Unions shall be provided at each connection to equipment. Special attention shall be given to the accurate placing of valves so that they will not be subject to undue strains and unless otherwise specified or called for in the Construction Drawings, their stems shall be truly vertical. Valves on vertical piping shall have their stems away from the wall and easily accessible.

D. Hangers and Supports. The Contractor shall furnish and install all hangers and supports shown in the Construction Drawings and necessary for substantial, rigid construction in connection with piping and appurtenances installed by him.

The Contractor's shop drawings shall show the quantity, type, design and location of all hangers and supports required. Hangers and supports shall be of standard design where possible, shall provide an adequate factor of safety, and, except where otherwise shown or specified, shall be as manufactured by Crane Co.; Grinnell Company, Inc. or approved equal.

Unless indicated or specified otherwise, concrete inserts for hangers and supports shall be of galvanized malleable iron. They shall be designed to permit horizontal adjustment and to lock the rod nut or head. All anchor bolts and expansion bolts which are submerged in water or subject to continuous or intermittent moisture shall be of Type 316 stainless steel unless otherwise specified or indicated in the Construction Drawings.

E. Sleeves, Castings and Wall Fittings. The Contractor shall furnish all pipe sleeves, castings and wall fittings required for piping to be furnished and installed by him. Sleeves shall be constructed and installed in accordance with the details called for in the Construction Drawings and unless otherwise shown in the Construction Drawings, pipe sleeves for pipe smaller than three (3") inches in diameter shall be constructed of sections of pipe of the same material as the pipe which they will carry and of sufficient diameter to permit caulking of the joint between the sleeves and the piping.

F. Bell and Spigot Joints. The spigot end of each pipe or fitting shall be entered into the adjoining bell to within one-eighth (1/8") inch (3.2 mm) of the total depth of the bell and properly centered so as to leave a uniform space all around for the reception of the jointing material.

All bell and spigot joints on exposed piping located within structures shall be mechanical joints. All bell and spigot joints at pipe and wall sleeves and wall castings shall be mechanical joints unless specified or indicated otherwise.

G. Flamed Joints. In jointing flanged pipe, fittings and adjacent pieces shall be blocked to line and grade and held firmly in position until the joint has been completed. Gaskets shall be inserted in each joint. Care shall be exercised in making flanged joints to avoid unduly straining the flanges.

Gaskets, together with standard machine bolts having hexagon nuts and square heads, shall be supplied for all flanged pipe joints. Full-faced gaskets, one-eighth (1/8") inch (3.2 mm) thick, shall be furnished for pipe up to and including twelve (12”) inches (310 mm) in diameter, and ring gaskets, one-eighth (1/8"), inch (3.2 mm) thick shall be furnished for pipe larger than twelve (12") inches (310 mm) in diameter. Sheet packing for gaskets shall be Garlock Special Duck Insertion

Sheet Packing, Style No. 19 as manufactured by Garlock Packing Company; B.F. Goodrich Company; United States Rubber Company or approved equal.

H. Mechanical Joints. Mechanical joints shall be made in accordance with the requirements of the manufacturer of the pipe and as specified.

Joints shall be thoroughly cleaned before assembly, using a wire brush to remove all rust, grease, oil and other foreign material, taking care not to damage the protective coating of the pipe. The entire joint and rubber gasket then shall be painted with a soap solution of proper consistency.

After placing the gland and rubber gasket in position on the spigot end of the pipe, the entire section of the pipe shall be pushed forward to seat the spigot ends in the bell and the gasket pressed into place. Special care shall be taken to center the spigot in the bell and to have the gasket evenly located around the entire joint. The gland then shall be placed in position and the bolts inserted. At least two (2) men shall be used in drawing up the bolts and diametrically opposite bolts shall be drawn up, a little at a time, working around the joints, until all bolts are tight. Torque-limiting wrenches, set to the proper torque, shall be used for tightening bolts and each bolt shall be tested with a torque-indicating wrench.

3.02 FIELD QUALITY CONTROL

3.02.1 FIELD TEST

After installation all pipelines shall be tested in sections where and as directed by the Engineer. The section to be tested shall be closed by valves, temporary flanges, plugs or bulkheads as required. The pipelines shall then be filled with water. Where test pressures in excess of working pressures are called for, a pump with calibrated tank or barrel and pressure gauge shall be attached to the pipelines in a satisfactory and approved manner, using small outlets in the pipe or taps made in the plugs, caps or fittings for this purpose. By means of the pump, the water pressure shall be raised to a pressure equal to one hundred and fifty (150%) percent of the working pressure with a minimum of fifty (50#) pounds per square inch (0.34 MPa) for all pipelines except chlorine liquid and gas pipelines, which shall be tested at a minimum pressure of three hundred (300#) pounds per square inch (2.07 MPa). The pressure shall be maintained at that point for a period of not less than thirty (30) minutes. Any leaks, which develop on test, shall be repaired and the lines tested until absolutely tight piping is obtained.

SECTION 15C240
SEWER PIPE TEST

PART 1. GENERAL

1.01 SUMMARY

1.01.1 SECTION INCLUDES

A. This section includes the test for all sewer pipes including labor, material, equipment, and everything necessary to complete the work.

1.02 SUBMITTALS

If the air test is used, the equipment to be used shall be submitted to the Engineer for approval. The equipment shall include, but is not limited to the air metering equipment and the air compressor.

PART 2. PRODUCTS

A. Not used

PART 3. EXECUTION

3.01 GENERAL

A. Contractor shall furnish all labor, material, equipment, and everything necessary to complete the test required by this Section of the Technical Specifications.

B. Testing shall be done on all sewer pipe included in the Work. Work is defined in the General Conditions.

C. Contractor shall at his own expense, locate and repair defective joints, pipes and others, and retest until the tested values fall within specified limits.

3.02 FIELD QUALITY CONTROL

3.02.1 TEST PROCEDURES

A. After the pipe has been laid and backfilled, a rigorous infiltration and/oror exfiltration test shall be made. Testing shall be tested in sections. The maximum section size is the distance between two consecutive mandholes or registers in the system. Smaller section sizes may be required by the engineer. It is preferable for the Contractor to perform these tests before reaching the final backfilling phase of the installation. In this way, if any trouble does develop, it will be easier to locate and repair.

B. When the ground water level is at least one (1) foot above the top of the pipeline to be tested, an infiltration test shall be made. When the ground water level is less than one (1)

foot above the top of the pipeline, an ex-filtration test shall be made in lieu of infiltration test.

The maximum allowable amount of infiltration and exfiltration measured by test shall be at a rate of not greater than 50 gallons per inch of pipe diameter per mile per twenty-four (24) hours.

Should any test on any section of pipe disclose an infiltration and/or exfiltration rate greater than the amount specified above, the Contractor shall at his own expense, locate and repair defective joints or pipes, and retest until the infiltration and/or exfiltration is within specified allowance.

C. Infiltration Test

1. The pipe and house connection lines to be tested should be plugged at both ends, to prevent water intrusion.

2. Install suitable measuring device at lower end.

3. The infiltration test should be done at the lower end of the pipe by means of a measurement of volume and time. After the measuring device is installed allow sufficient time for the infiltration water to build up and level off behind the weir until a steady uniform is observed.

4. Measure the amount of water flowing through the outlet over a specified period of time

D. Exfiltration Test

1. The portion of the pipe line to be tested should be plugged at both ends and all house connections or other outlets, providing suitable means for total air removal.

2. That portion of pipe line should be filled with water to a minimum height, not less than 3 ft, over the top of the pipeline at the upstream manhole.

3. Let water stand for at least four (4) hours, overnight will insure more accurate result.

4. Refill the manhole to original elevation.

5. Measurement of exfiltration should be done by observing either the drop in elevation in 30 minutes or the quantity of water required to maintain the reach in full condition for 30 minutes.

6. Subtract manhole loss, as previously determined, to get actual line loss.

E. Air test

The low pressure air test, a more recent method for testing sanitary sewers, has become increasingly popular in recent years and is now generally recognized as a quick, efficient and economical method of determining the soundness and tightness characteristics of sewer lines.

The low-pressure air test is based on the principal of air-pressure loss per time period (rate) and its relationships to construction errors, pipe and joint failures. The actual test is essentially a measurement of air-pressure drop versus time per pipe diameters for an isolated test section of the pipe line. The rate in air pressure drop indicates the absence or presence of deficiencies in the sewer pipe.

1. Air Test Procedures:

a) Test is conducted between two (2) consecutive manholes, as directed by the Engineer.

b) The test section of the sewer line is plugged at each end. One of the plugs used at the manhole must be tapped and equipped for the air inlet connection for filling the lines from the air compressor.

c) All service laterals, stubs and fittings into the sewer test section should be properly capped or plugged, and carefully braced against the internal pressure to prevent air leakage by slippage and blowouts.

d) Connect air house to tapped plug selected for the air inlet. Then connect the other end of air hose to the portable air control equipment which consists of valves and pressure gauges used to control:

1) The air entry rate to the sewer test section, and

2) To monitor the air pressure in the pipe line.

More specifically, the air control equipment includes a shut-off valve, pressure reduction valve and a monitoring pressure gauge having a pressure range from 0 to 5 psi. The gauge should have minimum deviations of .10psi and accuracy of +.04psi.

e) Connect another air hose between the air compressor (or other source of compressed air) and the air control equipment. This completes the test equipment set-up. Test operations may commence.

f) Supply air to the test section slowly, filling the pipe line until a constant pressure of 3.5 psi is maintained. The air pressure must be regulated to prevent the pressure inside the pipe from exceeding 5.0 psi.

g) When the constant pressure of 5.0 psi is reached, throttle the air supply to maintain the internal pressure above 3.0 psi for at least 5 minutes. This time permits the temperature of the pipe wall. During this stabilization period it is advisable to check all capped and plugged fittings with a soap solution to detect any leakage at these connections. If leakage is detected at any cap or plug, release the pressure in the pressure in the line and tighten all leaky caps and plugs. Then start the test operation again by supplying air. When it is necessary to bleed off the air to tighten or repair a faulty plug, a new five-minute interval must be allowed after the pipe line has been refilled.

h) After the stabilization period, adjust the air pressure to 3.5 psi and shut off or disconnect the air supply. Observe the gauge until the air pressure reaches 3.0 psi commence timing with a stop watch which is allowed to run until the line pressure drops to 3.5 psi at which time the stop watch is stopped. The time required, as shown on the stop watch, for pressure loss of 0.5 psi is used to compute the air loss. Most authorities consider it unnecessary to determine the air temperature inside the pipe and the barometric pressure at the time of the test.

i) If the time, in minutes and seconds, for the air pressure to drop from 3.0 to 2.5 psi is greater than shown in Table I for the designated pipe size, the section undergoing test shall have passed and shall be presumed to be free of defects. The test may be discontinued at that time.

j) If the time, in minutes and seconds, for the 0.5 psi drop is less than that shown in Table I for designated pipe size the Section of the pipe shall not have passed the test; therefore, adequate repairs must be made and the line re-tested.

TABLE I. Time Requirements for Air Testing	
Pipe Size (In Inches)	*Time: Min:Sec*
4	2:32
6	3:50
8	5:06
10	6:22
12	7:39
14	8:56
15	9:35
16	10:12
18	11:34
20	12:45
21	13:30
48	11:33
54	34:39
60	38:30
72	46:12
For pipe diameter larger than 21 inches use the following: Minimum time in seconds = 462 x pipe diameter in feet	

1) Pipe size with their respective Recommended Minimum Time, in Minutes and Seconds, for Acceptance by the Air Test Method.

2) For eight (8) inch smaller pipe, only; if during the five minutes saturation period, pressure drops less than 0.5 psi after the initial pressurization and air is not added, the pipe section undergoing test shall have passed.

3) Multi pipe Sizes: When the sewer line undergoing test is 8”or larger in diameter pipe and includes 4”or 6”laterals, the figures in Table I for uniform sewer main

size will not give reliable or accurate criteria for the test. Where multi-pipe size are to undergo the air test, the Engineer can compute the "average" size inches which is then multiplied by 3802 seconds. The results will give the minimum time in seconds acceptable for a pressured drop of 0.5 psi for the "average" diameter pipe, if the air test is used adequate equipment including air metering and air compressor should be submitted to the Engineer for approval.

3.02.2 CLEARING:

A. At the conclusion of the work the Contractor shall thoroughly clean all of the new sewer by flushing with water or other material which may have entered during the construction period. Debris cleaned from the lines shall be removed from the lowest manhole. If, after this cleaning, any obstructions remains, they shall be removed. After the sewer are cleaned and if the groundwater level is above the pipe, or following a heavy rain, the Engineer will examine the pipe for leaks. If any defective pipes or joints are discovered at this time, they shall be repaired by the Contractor.

All water for testing and flushing shall be furnished by the Contractor at his own expense.

END OF SECTION

SECTION 15D090
GALVANIZED STEEL STRAPS

PART 1. PRODUCTS

1.01 SUMMARY

1.01.1 SECTION INCLUDES

This section includes furnishing and installing the necessary galvanized steel straps to support the pipe, as shown in the Construction Drawings or ordered by the Engineer, including all materials, labor and accessories required to complete the work.

PART 2. PRODUCTS

A. Straps, expansion bolts, etc. shall be hot-dip galvanized steel, of the dimensions shown in the Construction Drawings, and installed at the locations called for or required to adequately support piping. They shall be securely anchored.

PART 3. EXECUTION

A. The Contractor shall furnish and install the necessary galvanized steel straps to support the pipe, as shown in the Construction Drawings or ordered by the Engineer, including all materials, labor and accessories required to complete the work.

SECTION 15D160
FLANGED COUPLING ADAPTER

PART 1. GENERAL

1.01 SUMMARY

1.01.1 SECTION INCLUDES

Under this section the contractor shall furnish and install the flanged coupling adapters of the size, type and construction shown in the Construction Drawings or as may be ordered by Engineer, and shall include the testing, painting of coupling, bolts, nuts, and all labor, tools, materials and appliances necessary to complete the work.

PART 2. PRODUCTS

A. When the pipe is two (2") inches or smaller slip couplings shall he used but when pipes are four (4") inches or larger flanged coupling adapters shall be used. Both couplings shall be of steel with standard mechanical bolts and nuts.

Waterway: Flanged-coupling adapters shall have a clear waterway of the full normal diameter specified.

PART 3. EXECUTION

A. Contractor shall furnish and install the flanged coupling adapters of the size, type and construction shown in the Construction Drawings or as may be ordered by Engineer, and shall include the testing, painting of coupling, bolts, nuts, and all labor, tools, materials and appliances necessary to complete the work.

B. Flanged Coupling Adapter shall be for a working pressure of 150 lbs. and tested at the shop under a pressure of 300 lbs. per square inch. Couplings which are not watertight or that show other defects will be rejected.

C. Leakage or other defects due to faulty design, poor workmanship or other causes, which may be for and after the coupling are installed and operated shall be made good by the contractor at his own expense.

SECTION 15E030
P. V. C. SEWER SERVICE CONNECTION

PART 1. GENERAL

1.01 SUMMARY

1.01.1 SECTION INCLUDES

A. This section includes excavation of all material, furnishing, and laying all PVC pipe and fittings for the service connections included in the project or that may be ordered by the Engineer. Service connections will extend from the "Y" at the sewer, to the front of the property line as shown in the Construction Drawings.

B. Bends, cleans outs, concrete for pipe protection, excavation for pipe trench, backfilling and restoring of road or street pavement to original condition and any other work or material incidental shall be included.

1.01.2 PAYMENT

A. Work on this section shall be paid on a unit price basis as quoted in the Proposal. Quoted unit prices include the excavation, backfilling, demolition and replacement of pavement, sidewalks, curb and gutters, and any other incidental work that needs to be performed to install the service connection and clean-out up to the property limit.

PART 2. PRODUCTS

2.01 MATERIALS

A. PVC pipe. Poly (Vinyl Chloride) Ring-Tite (PVC) Gravity sewer pipe and fittings for service connections shall fulfill the requirements as to weight and quality of the standard specifications for P. V. C. Sewer Pipe of the American Society for Testing Materials (ASTM) Serial designation D3034, and with the corrosion and abrasion resistant, load-carrying capacity, high impact resistance requirements of the ASTM method D2444. It shall also comply with the ex-filtration and infiltration tests specified in the section specifying the PVC pipe.

PART 3. EXECUTION

A. The Contractor shall excavate all material, furnish and lay all PVC pipe and fittings for the service connections included in the project or that may be ordered by the Engineer. Service connections will extend from the "Y" at the sewer, to the front of the property line as shown in the Construction Drawings.

B. Work includes furnishing and inatlling all required bends, cleans outs, concrete for pipe protection, excavation for pipe trench, backfilling and restoring of road or street pavement to original condition and any other work or material incidental.

C. Each sanitary sewer connection shall be coordinated with the property owner to determine the best location.

D. All house connections including fittings shall be PVC DR-35. Bronze screw caps with recessed nut shall be provided for all clean-outs.

E. Contractor shall comply with requirements of :

1. Applicable Division-2 sections for excavation and back filling required in connection with exterior water service piping.

2. Applicable Division-3 sections for concrete work required in connection with exterior water service piping.

3. The Plumbing code in effect for Puerto Rico (the International Plumbing Code at the time of this writing).

F. Laying. The Contractor shall use suitable tools and appliances for the safe and convenient handling and laying of pipe to the lines and grades shown or given by the Engineer. All pipes shall be cleaned before being laid and shall be kept clean until accepted with the completed work. Following the "Y" at the sewer, a 1/8th bend shall be placed and the end of the service connection at the lot or property line shall be plugged with suitable cement stopper.

When the "Y" at the sewer is over two (2) meters deep below the street surface, it shall be laid with the spur upwards and the pipe for the service connection shall be placed vertically up to a height of about one (1) meter below the street surface. The remainder of the service connection shall be laid uniform upward grade of not less than one (1) percent. The change in direction of the pipe at the end of the vertical section shall be made with a "combination “Y" and eighth bend" with a brass plug. All work shall be done in accordance with the rules and regulations of the PRASA.

G. Pipe Protection. When the pipe is laid at depth less than sixty (60) centimeters, it must be protected with Class B concrete as specified in Section 033100 - “Cast in place Concrete” or as shown in the Construction Drawings and/or as directed by the Engineer.

SECTION 15E040
SERVICE CONNECTIONS TO WATER MAINS

PART 1. GENERAL

1.01 SUMMARY

1.01.1 SECTION INCLUDES

A. This section includes furnishing all necessary labor, materials, accessories, tools, plant and equipment necessary to install all service connections to water mains, shown on the Contract Drawings, or that may be ordered by the Engineer. However, the PRASA will furnish the tapping machine and will perform the tapping operations, at the expense of the Contractor, when service connections are to be made to existing water mains. In case the tapping operations are to be executed on water mains to be installed by the Contractor, the entire tapping operations shall be executed by him; including the furnishing of the tapping machine and all labor, materials, accessories, tools, plant and equipment necessary to complete the work to the satisfaction of the Engineer.

1.01.2 REFERENCES

A. Section 02A292 titled "Trench Excavation for Pipe", Section 033100 titled "Cast in Place Concrete", and Section 032100 titled "Concrete Reinforcement for Concrete Work".

B. International Plumbing Code.

PART 2. PRODUCTS

2.01 MATERIALS

A. The materials used for the reinstallation of the service connection shall conform to the requirements of the Committee Report of the American Water Works Association on "Collected Standards for Service Line Materials".

B. Tap Sizes. Maximum size of tapping permitted in the barrel of Class 150 cast iron pipe shall be in accordance with the following table:

Pipe Size (inches)	3	4	6	8	10	12	14	16	18	20	24
Tap Size (inches)	½	¾	1	1¼	1½	2	2	2½	2½	3	4

Larger size threaded connections shall be made with double strap service clamps except the 1” taps on 4” pipe which can be made with single strap service clamps.

C. Copper Water Tube. Shall be seamless especially designed for underground water service, in conformance with ASTM Specification B88 (of latest revision), Type "K".

D. Service Line Fitting. Shall be "ounce metal" containing 85 per cent copper and 5 per cent, each of tin, lead and zinc (ASTM B, of latest revision).

E. Inlet End of the Corporation Stop. Shall have the standard corporation stop thread (commonly known to the trade as the Mueller Thread) as specified under the AWWA Standards C800 (of latest revision). The water meter (to be furnished and installed by the PRASA) shall be installed either on a straight-line yoke housed in a Standard cast iron meter box, or on a meter yokebox.

F. Straight-Line Yoke. Shall be cast iron and as manufactured by the Ford Meter Box Company, Inc., or approved equal.

G. Meter Box and Meter Box Covers. Shall be made of cast iron of the best quality and shall be provided with a lock and lifter key.

H. Yokebox. Shall be cast iron and brass, of the best quality for the purpose intended, as manufactured by The Ford Meter Box Company, Inc., or approved equal.

I. Service Clamps.

1. **Double Strap Service Clamps.** Shall be equal in all respects to Type F-4339 Double Strap Service Clamp shown on James B. Clow & Sons Catalog.

2. **Single Strap Service Clamps.** Shall be equal in all respects to Type F-4338 Single Strap Service Clamp shown on James B. Clow 4 Sons Catalog.

J. Control Valves.

1. Provide valves and flow control devices as indicated.

2. Minimum working pressure, 150 psi unless otherwise indicated.

3. Gate Valves. Standard shut-off valves with maximum working pressure cast into body, outside-screw-and-yoke type complying with AWWA C 500.

4. Check Valves. Gravity-operated, regular type, iron-bodied, bronzed fitted with metal-to-metal or rubber faced checks, complying with AWWA C 506.

5. Butterfly Valves. Rubber seated, equipped with gear or travelling nut accuator to minimize water hammer, complying with AWWA C 504.

PART 3. EXECUTION

A. The Contractor shall furnish all necessary labor, materials, accessories, tools, plant and equipment necessary to install all service connections to water mains, shown on the Contract Drawings, or that may be ordered by the Engineer. However, the PRASA will furnish the tapping machine and will perform the tapping operations, at the expense of the Contractor, when service connections are to be made to existing water mains. In case the tapping operations are to be executed on water mains to be installed by the Contractor, the entire tapping operations shall be executed by him including the

furnishing of the tapping machine and all labor, materials, accessories, tools, plant and equipment necessary to complete the work to the satisfaction of the Engineer.

B. Contractor shall comply with requirements of Section 02A292 titled "Trench Excavation for Pipe" in connection with exterior water service piping. Contractor shall comply with Section 033100 titled "Cast in Place Concrete" and Section 032100 titled "Concrete Reinforcement for Concrete Work" required in connection with exterior water service piping.

C. Code Compliance. Comply with applicable portions of the International Plumbing Code and local plumbing codes where more stringent.

D. Service connections shall extend from the water main to the water meter. Shall include the furnishing and installation of corporation stop, union coupling adapters, water copper pipe, fittings, concrete protection, etc., and if necessary, reinstallation of water meter, meter box and meter yoke or meter yokebox, etc., as shown on the detailed Construction Drawings, or as ordered by the Engineer.

E. The work shall be executed to the complete satisfaction of the Engineer, leak-proof, with all the necessary precautions in order not to harm any of the parts of the service connection. The flattening or undue bending of the copper water tube shall not be permitted, so that its cross-section shall remain constant at all times. No soldering shall be permitted. The Engineer shall require the oiling or greasing of flanging tools, to thus promote satisfactory workmanship by the Contractor. The laying and backfilling of the service connection shall be done so that stones shall not damage it. The copper water tube shall be laid evenly so that all its elements are supported uniformly by the ground underneath. The Contractor to the satisfaction of the Engineer shall do restoration of street pavement and other structures to their original ground condition.

F. Water Service Identification. Provide line markers, labeled "Caution, Buried Water Line Below" over all buiered water lines acording to Section 104520 titled "Detectable Marking Tape".

G. Cleaning Conduit and Sterilization.

1. Clear interior of conduit of dirt and other superfluous material as work progresses.

2. Place plugs in end of uncompleted conduit at end of day or whenever work stops.

3. At completion of water service line installation, flush and sterilize in conformance with AWWA C 601, to the satisfaction of the Engineer.

H. Testing.

1. All testing shall be done under the supervision of the Engineer. The Contractor shall furnish the necessary tools, plant, equipment, appurtenances and labor to carry out the necessary tests. All leaks and defects disclosed during testing operations shall be corrected to the satisfaction of the Engineer. The details and particulars of the testing operation shall be the responsibility of the Engineer, to insure that the Contractor under this item produces a sound work.

2. Perform hydrostatic testing of completed conduit lines in accordance with Engineer instructions.

3. Perform operational testing of valves by opening and closing under water pressure to insure proper operation.

4. Test all of service connections, including all fittings and appurtenances.

SECTION 15E050
CONNECTION TO EXISTING MANHOLES

PART 1. GENERAL

1.01 SUMMARY

1.01.1 SECTION INCLUDES

This section includes furnishing all necessary materials, tools and labor to make the connections to existing manholes including removal of existing sewer pipe, excavation, backfilling and appurtenances, as shown on Construction Drawings or ordered by the Engineer.

PART 2. PRODUCTS

2.01 MATERIALS

A. Cement mortar used in this work shall composed of:

1. Cement: Cement for mortar shall be American Portland cement of a recognized brand satisfactory to the Engineer and shall meet the requirements of the "Standard Specifications for Portland Cement" of the ASTM, Serial Designation C150, Type I-A. At the option of the Engineer, and at the expense of the Contractor, cement tested from reserved bins at the plant of the cement manufacturer will be acceptable. Provided the standard tests including those made upon twenty-eight (28) day old cement mortar are conducted by an approved testing laboratory, and provided complete reports of the tests are satisfactory to and received by the Engineer before the cement is to be used.

2. Sand: Sand for mortar shall be of such fineness that 100% will pass a standard 8 mesh sieve, and at least 45 percent will pass a standard 40 mesh sieve.

Sand used in backfill shall be clean, natural and consisting of hard, dense, strong, durable and uncoated particles. It shall be free from injurious amounts of dust, lumps, soft or flaky material, shale, mica, loam, organic matter and other deleterious substance. Sand failing in the standard calorimetric test shall not be used. Sand shall have a specific gravity not less than two and six-tenths (2.6) and any sand which fails to show tensile and compressive strength in one to three (1:3) mortar specimens equal to that of standard Ottawa sand mortar shall be rejected. Loss on sodium sulfate test shall not exceed five (5) percent.

PART 3. EXECUTION

A. The Contractor shall furnish all necessary materials, tools and labor to make the connections to existing manholes including removal of existing sewer pipe, excavation, backfilling and appurtenances, as shown on Construction Drawings or ordered by the Engineer.

B. Connection to existing manhole shall be made at the proper grade elevations, with utmost care so as to avoid leaks and other imperfections, and to the satisfaction of the Engineer.

SECTION 15E070
CONNECTION TO EXISTING WATER MAIN

PART 1. GENERAL

1.01 SUMMARY

1.01.1 SECTION INCLUDES

This section includes furnishing all necessary materials and labor to make all connections to existing water mains, shown in the Construction Drawings or that may be ordered by the Engineer, including excavation, backfilling, restoration of existing pavement to original conditions, and tapping valves and sleeves. PRASA will furnish the tapping machine and perform the tappings at the expense of the Contractor.

PART 2. PRODUCTS

A. All products shall be as specified, indicated in the Construction Drawings and/or as required by Engineer to complete the specified work.

PART 3. EXECUTION

A. The Contractor shall furnish all necessary materials and labor to make all connections to existing water mains, shown in the Construction Drawings or that may be ordered by the Engineer, including excavation, backfilling, restoration of existing pavement to original conditions, and tapping valves and sleeves. The PRASA will furnish the tapping machine and perform the tappings at the expense of the Contractor.

B. Connection to existing water main shall be made at the proper grade elevations, with utmost care so as to avoid leaks and other imperfections, and to the satisfaction of the Engineer.

C. Tapping shall be done with approved tapping machine furnished by the PRASA. The Contractor shall make the necessary arrangements with the PRASA for the performance of the tapping.

D. Testing. All connections, once that the pipe, sleeves, valves and other appurtenance are laid, installed and supported, shall be tested by the Engineer. The Contractor shall furnish the necessary tools, equipment and labor to carry out the tests.

SECTION 160100
MATTING FOR FLOOR INSULATION

PART 1. GENERAL

1.01 SUMMARY

1.01.1 SECTION INCLUDES

This section includes rubber or plastic matting and sheet floor coverings for use around electrical apparatus or circuits as a safety measure to protect personnel from accidental electrical grounding not exceeding 3000 volts. Equipment operating at higher voltages shall utilize other built-in safety measures to provide personnel protection.

1.02 REFERENCE STANDARDS

1.02.1 FEDERAL STANDARDS:

A. FED-STD-501 Floor Coverings, Resilent, Nontextile: Sampling and Testing

B. FED-STD-595 - Colors

C. FED-STD-601 - Rubber: Sampling and Testing

1.02.2 OTHER PUBLICATIONS

A. The following documents are part of this section to the extent specified herein.

1. D-142 - Tension Testing of Vulcanized Rubber

2. D-1204 - Changes in Linear Dimensions of Nonrigid Thermoplastic Sheeting or Film Measuring

3. D-1242 - Resistance to Abrasion of Plastic Materials, Test for

4. D-2240 - Indentation Hardness of Rubber and Plastics by Means of a Durometer, Test for

1.03 SUBMITTALS

A. Contractor shall submit a sample unit, test results and sample data and other information indicating compliance with this section.

PART 2. MATERIALS

A. The floor covering shall be made from a compound utilizing synthetic rubber, reclaimed robber, polyvinyl chloride, a copolymer of polyvinyl chloride and polyvinyl acetate, or a combination thereof. The use of ingredients which would tend to emit objectionable odors in service are prohibited.

B. The floor covering material shall have a smooth wearing surface free from blisters, cracks, protruding particles, and embedded foreign matter. The color finish, and wearing surface shall be

uniform throughout the full thickness of the floors material or when the top wear surface is calendered the base sheet (laminated construction), the wear surface shall show evidence of marbleizing dispersed throughout the full thickness of the wear surface. The back side of the floor covering shall be sanded, roughened, knurled, or finished with a cloth fabric or cloth imprint. Type II material have finished straight edges.

C. Thickness. The thickness of type I and II material shall be 0.125 inch minimum. The wear surface, if calendered to a base sheet, shall be at least 0.040 inch thick.

D. Size. Unless otherwise specified the length of the rolls shall be 25 + 3 yards. Unless otherwise specified type I shall be available in 36 or 72 inch widths with no minus tolerance and type II shall be available in a 36 inch width with no minus tolerance with finished straight edges.

E. Color for Type I. The color, finish, wearing surface, and mottling shall match a sample agreed upon by buyer and seller. In marbleized of mottled flooring, the marbleized or mottling shall be worked throughout the full thickness of the material or the wear surface if the wear surface is calendered to the base sheet.

F. Color for Type II. The basic or background (if mottled or marbleized pattern) color shall correspond to blue, number 15177; gray, number 36231 or green, number 14223 of FED-STD -595. A solid, marbleized or mottled pattern shall match a sample as agreed upon by buyer and seller.

G. Tensile Strength. AS received condition (initial). The tensile strength of the floor covering the as-received condition shall be not less than 800 pounds per square in (lb/in^2).

Property:	**Test Requirements**	
	Type I:	**Type II:**
Thickness, minimmum (inch)	0.125	0.125
Color	-	-
Tensile strength (lb/in^2)		
Initial	800	800
After immersion sulphuric acid	70 % of initial	70 % of initial
After oxygen bomb, agin	80 % of initial	80 % of initial
After light agin	65 % of initial	65 % of initial
Ultimate elongation, (%min.)	75	100
Permanent set, (%max.)	25	25
Hardness	95 + 5	80 + 5
Abrasion resistance (mils)		
Loss, maximmum	10	20
Flexibility	Shall pass	Shall pass
Voltage	Shall pass	Shall pass
Dielectric strength, minimmum (volts)	30,000	30,000
Fire Resistance	Shall pass	Shall pass
Dimensional stability (inch/foot)	+0.020	+0.250
Identification marking	-	-

SECTION 160200
LIGHTNING PROTECTION

PART 1. GENERAL

1.01 SUMMARY

1.01.1 SECTION INCLUDES

Furnish and install a complete lightning protection system on each building and structure consisting of air terminals, conductors, ground terminals, interconnection Conductors, arresters, and other connectors or fittings required to complete the system.

1.02 REFERENCES

A. UL. Underwriters' Laboratories, Inc., 333 Pfingeten Road, Northbrook, Illinois 60062, U.S.A.

1. C5.1: Lightning Protection Code.

B. NFPA. National Fire Protection Association, 470 Atlantic Avenue, Boston, Massachusetts 02210, U.S.A.

1. 78-6: Lightning Protection System.

1.03 QUALITY ASSURANCE

1.03.1 REGULATORY REQUIREMENTS

A. Conform to UL 96A and ANSI C5.1.

B. Conform to Puerto Rico Power Authority (Autoridad de Energía Eléctrica) regulations and the National Electrical Code.

PART 2. PRODUCTS

2.01 MANUFACTURERS

A. Thompson Lightning Protection Company. 901 Sibley Highway, St. Paul, Minnesota

B. Franklin Lightning Rod Co., 341 Franklin St., Reading, Mass.

C. American Lightning Rod Co., 400 Sixth Street, Dover, NH

D. Or approved equal.

2.02 MATERIALS

A. Class 1 Materials. Furnish conductors, fittings, and fixtures necessary to protect ordinary buildings and structures not exceeding 75 feet (23 m) in height.

B. Materials, Class I. Table I give minimum sizes and weights for air terminals, and main and secondary conductors. Secondary conductors used for bonding and interconnecting metallic bodies to the main conductor, and which will not be required to carry the main lightning current, may be reduced in size but not less than No. 6 AWG copper or equivalent. Use main conductor size for interconnection to metal water systems, steam or hot water heating systems, or other metallic masses having a low resistance-to ground.

C. Table I: Class I Material Requirements.

Type of conductor		**Copper Standard**	**Copper Metric**
Air Terminal, Solid	Min. Diameter	3/8 inch	9.5 mm
Air Terminal, Solid	Min. Diameter		15.9 mm
	Min. Wall Thickness	.032 inch	0.8 mm
Main Conductor Cable	Min. Size ea.	17 AWG	
	Strand Wgt. Per length	187 lbs/1000 ft.	278 g/m
	Cross Sect. Area	57,400	29 square mm
Main Conductor, Solid Strip	Thickness	16 AWG	
	Width	1 inch	25.4 mm
Secondary Conductor, Cable	Wire Size	17 AWG	
	Number of Wires	14	14
Secondary Conductor, Solid Strip	Thickness	16 AWG	
	Width	1/2 inch	12.7 mm

D. Class II Materials. Furnish conductors, fittings and fixtures necessary to protect ordinary buildings and structures exceeding 75 feet (23 m) in height; or one, which has a structural steel frame. Table II give minimum sizes and weights for air terminals and secondary conductors for Class II structures.

E. Table II. Class II Material Requirements.

Type of conductor		**Copper Standard**	**Copper Metric**
Air Terminal, Solid	Min. Diameter	1/2 inch	12.7 mm
Main Conductor Cable	Min. Size ea.	16 AWG	
	Strand Wgt. Per length	375 lbs/1000 ft.	558 g/m
	Cross Sect. Area	115,000	58 square mm
Scundary Conductor Cable	Wire Size	17 AWG	
	Number of Wires	14	14
Secondary Conductor, Solid Strip	Thickness	16 AWG	
	Width	1/2 inch	12.7 mm

F. Where any part of a protection system is exposed to mechanical injury, protect it by covering it with molding or tubing. If ferrous metal pipe or tubing is used around the conductor, connect the conductor electrically to the pipe or tubing at both ends.

1. Furnish conductors made of stranded copper.

PART 3. EXECUTION

3.01 INSTALLATION

A. No bend of conductor is to form an included angle of less than 90 degrees nor have a radius of bend less than 8 inches (203 mm).

B. Interconnect all conductors, air terminals to form a two-way path from each air terminal horizontally or downward to connections with ground terminals.

C. Conductors may be coursed through air without support for a distance of 3 feet (900 mm) or less. With a 5/8-inch (15.9 mm) rod or its equivalent as a support, securely fastened at each end, a conductor may be coursed through air for a distance not to exceed 6 feet (1,600 mm).

D. Install roof conductors to interconnect all air terminals and provide a two-way path to ground horizontally or downward from the base of each terminal.

E. Install at least two down conductors on any kind of structure. Location depends on placement of air terminals, size of structure, most direct coursing, security against displacement and location of metallic bodies, water pipes, and ground conditions. Separate down conductors as widely as perimeter, install (30 m) of perimeter or fraction thereof.

F. Terminate each down conductor at a ground terminal.

G. Bond radio and television masts of metal, located on a protected building, to the lightning protection system with a main-size conductor and fittings.

H. Use connector fittings on all lightning conductors at “end-to-end", "tee" or "Y" splices. Attach them so as to withstand a pull test of 200 pounds (890 N). Make fittings for connection to metal tracts, gutters, downspouts, ventilators, chimney extensions, or other metal parts about the structure tight to the object by compression under bolt heads. Both crimp type and bolted Clamps and splicers of stamped or cast metal are acceptable under Class I requirements. Do not use crimp type clamps and splicers in Class II installations.

I. Securely attach conductors to the building or other object upon which they are placed. Use fasteners not subject to breakage. Furnish nails, screws and bolts, with which fasteners are secured, of the same material as the conductor or of such nature that there will be no serious tendency toward electrolytic corrosion in the presence of moisture because of contact between the different parts. Space conductor fasteners not more than 3 feet (900 mm) apart on all conductors.

J. All requirements covering exposed systems apply to concealed installations. Conductors are coursed the same except that the, may be coursed behind the exterior wall facing, in concealed or embedded conduit, or embedded directly in concrete.

K. In a concealed installation where conductors are embedded in concrete, bond the reinforcing steel to the cable with a main size conductor. Bond reinforcing steel at the top and bottom of each embedded download.

L. Ensure that materials, installation methods and procedures are in accordance with NFPA 78-6.

M. The ground system shall be interconnected so that there shall only be one ground potential.

SECTION 160310
ELECTRICAL CONTROLS AND MISCELLANEOUS ELECTRICAL EQUIPMENT

PART 1. GENERAL

1.01 SUMMARY

1.01.1 SECTION INCLUDES

Furnish, install and connect the electrical control equipment and miscellaneous electrical equipment, including such instruments and devices as are indicated and specified.

1.02 REFERENCE

A. UL. Underwriters' Laboratories, Inc., 33 Pfingsten Road, Northbrook, Illinois

B. NEMA. National Electrical Manufacturers Association, 2101 L Street, Northwest, Washington, D.C.

C. FM. Factory Mutual Engineering Corporation, Factory Mutual System, 1151 Boston/Providence Turnpike, Norwood, Massachusetts.

PART 2. PRODUCTS

2.01 MANUFACTURERS

A. Miscellaneous Equipment.

1. General Electric Company.

2. Westinghouse Company.

3. Square D Company.

4. Or approve equal.

B. Steel Channel.

1. Unistrut Corp., Wayne, MI.

2. Power-Strut Division, Van Huffel Tube Corp., Warren, OH.

3. T.J. Cope, Division of Cyprus Mines Corp., Collegeville, PA.

4. Or approved equal.

2.02 MATERIALS

A. Switches.

1. Furnish Hand-Off-Auto switches, safety switches, tumbler switches and other accessory devices as necessary for the control of motors and other electrical equipment or devices.

a) Furnish heavy-duty type, non-fuse type safety switches, with external operating handles, 3 PST, rated 600 volt, 60 Hertz with ampere rating as indicated, and having provisions for padlocking

b) NEMA 4X stainless steel enclosure.

B. Conduit And Wiring

1. Furnish conduit and wiring necessary to make connections between instruments panels, consoles, cabinets and external equipment and devices.

2. For sewage water treatment plants and stations the conduits shall be rigid galvanized pvc coated.

C. Combination Starters.

1. Unless otherwise indicated, furnish each combination starter with motor circuit protector and full-voltage magnetic starter. Furnish motor circuit protectors and starters as specified under Motor Control Centers.

2. Furnish control transformer for the control circuit of the Pump Control Panel with rating as shown in the Construction Drawings of adequate VA capacity for operation of:

a) Motor starters

b) Auxiliary relays

c) Indicating lights

d) Other associated equipment indicated.

3. Furnish control transformer with current limiting primary fuses.

4. Furnish Indicating lights of the transformer type, heavy duty, oil tight unit rated at 120 volts.

5. Furnish heavy duty, oil tight type pushbuttons to provide momentary contacts or maintained contacts as necessary for alarm silencing purposes.

D. Circuit Breakers.

1. Furnish manually operated circuit breakers, ambient compensated, providing thermal magnetic inverse time limit overload and instantaneous short circuit protection. Furnish overload protection on all poles; trip settings as indicated.

2. Furnish circuit breakers as specified under Motor Control Centers.

3. Furnish breakers that are rated 240-volt alternating current; 3 PST or 2 PST, have 100-amp. or larger frames, and have an interrupting capacity of not less than 10,000 rms. symmetrical amperes.

4. Furnish time-current characteristic curves for each size of circuit breaker furnished.

5. Furnish circuit breakers manufactured by General Electric Company, Square D Company, Westinghouse Electric Corp., or acceptable equivalent.

E. Control Panels.

1. Furnish control panels for pumps and other equipment, as indicated. Ensure that dimensions, construction and mounting of equipment is as indicated.

2. Furnish panels constructed of NEMA 4X stainless steel encousure and provided with terminal blocks for connection of all external wiring.

3. Furnish pushbuttons, indicator lights and switches of heavy duty, oil tight types. Furnish relays of industrial types, with 120-volt or 24 volt, 60-Hertz operating coils, and contacts rated for intended service.

4. Furnish nameplates for each panel and each device on panel. Nameplates of laminated plastic material, at least 3/32 in. thick, and with white letters on a black background.

PART 3. EXECUTION

3.01 INSTALLATION

A. Wiring of Miscellaneous Devices.

1. Make all electrical connections required for recording and indicating instruments and miscellaneous devices and provide electrical supplies to metering, instrumentation, control, and alarm systems.

2. Connect Hand-Off-Auto switches, safety switches, tumbler switches, and other accessory devices as indicated or necessary for control of motors and other electrical equipment or devices.

3. Install conduit and wiring and make all necessary electrical connections between all instrument panels, consoles, cabinets, and external equipment and devices. Panels, cabinets, etc. are indicated.

B. Wiring of equipment furnished under other sections:

1. As specified under applicable section.

2. Install conduit, wiring, and connections for equipment and devices furnished under other sections of specifications, and as indicated.

3. Provide power supply to all equipment requiring 240-volt and 120-volt supply indicated in the Construction Drawings and/or specified.

C. Enclosures for electrical equipment shall be as indicated. Where type of enclosure is not indicated, furnish the equipment with a NEMA Type 12 enclosure.

D. Furnish and install all corrosion resist outdoor steel channels necessary for mounting of electrical equipment.

SECTION 160500
GENERAL ELECTRICAL WORK

PART 1. GENERAL

1.01 SUMMARY

1.01.1 SECTION INCLUDES

This Section includes the furnishing of all labor, material, equipment and services necessary to construct and install the complete electrical system as shown on the accompanying Construction Drawings and specified herein, in complete accordance with all applicable requirements of the contract documents. This work shall include but not be limited to the following major items:

A. Secondary Service Entrance

B. Underground Power and Control Circuits

C. Secondary Electrical Power & Control Systems

D. Conduits, Wiring Devices & Boxes

E. Panelboards

F. Excavation & Backfill

G. Preparation of a set of as Built Drawings

1.02 SEQUENCING

A. Certain materials will be furnished, installed, or furnished and installed, under other sections. Examine the Contract Documents to ascertain these requirements.

B. Carefully check space requirements with other trades to insure that all materials can be installed in the spaces allotted thereto.

C. Transmit to the trades doing the work of other sections all the information required for work to be provided under their respective sections in ample time for their installation.

1.03 SUBMITTALS

A. Materials, equipment or other apparatus are specified by manufacturer, type or catalog number to establish standards of desired quality and style and shall be the basis of the Bid. These shall be furnished under the contract unless changed by agreement with the Authority's representative. Where more than one designation is listed, choice shall, be optional with the Contractor.

B. If substitutions are proposed for material whose performance Data are specified, or for material identified by make and model number, for which such sacrificing performance and accessibility, and shall not affect the performance nor the requirements for the work of this and other sections.

C. Approvals for materials specified herein will not be given merely upon the submission of manufacturer's name. Approvals will be granted only after the receipt of complete and satisfactory performance data as required by the Authority's representative, as well as detailed drawings and the like.

D. Approval of any submittal shall not relieve the Contractor from the responsibility of furnishing materials and system of proper dimensions, capacities, sizes, quantities, quality and installation details, to efficiently perform the requirements and intent of the Contract Documents. Such approval shall not relieve this trade from the responsibility for error in submittals.

E. Submit detailed layout Drawings for all electrical equipment, for all those services and distribution system which require close coordination with other work of this section, and/or the work of other sections. In case of question the Authority's representative will be the final Judge of the requirements for Drawings for specific areas.

F. Within six weeks after award of contract submit to the Authority's representative a list of all shop drawings which will be submitted in the course of the project. The list shall show the disposition of each item, including data of submission, approval, and the like. The list shall be kept up-to-date through the entire construction period.

G. Within six weeks after award of contract submit to the Authority's representatives for approval a list of all material and equipment manufacturers whose products are proposed.

H. Check the work described in any submittal for all clearances, field conditions, maintenance or architectural requirements, and proper coordination with all trades. Include on each layout shop drawings a certification that all related conditions have been checked with all trades, and that no conflict exists. No shop drawings submission will be approved without such certification.

I. If the submittals differ from the requirements of the Contract Documents, make specific mention of such difference in letter of transmittal, with a request for substitution together with reasons therefore so that, if acceptable suitable action may be taken for proper adjustment.

1.03.1 PRODUCT DATA

A. Within 30 days after receiving notice to proceed on the contract, the Contractor shall submit complete data and catalog information on all electrical and instrumentation equipment which he proposes to use.

The submittal shall list the manufacturer, trade name and model any other information which may useful to the Engineer in identifying the item and Determining its quality. The list shall include materials which are specified herein by manufacturer or trade name as well as items which the Contractor proposes to substitute.

1.03.2 SAMPLES SUBMITTAL

A. Submit Samples, of following item to the PRASA'S Representative for approval:

1. Wire and Cable

2. Conduit and Conduit Fittings

3. Outlet Boxes

4. Cable connectors and bushing

5. Starters and switches

B. Materials installed or work performed without approval of materials shall be done at he risk of the Contractor. The cost of removal of such material or work which is judged unsatisfactory for any reason by PRASA'S representative shall be at the expense of the Contractor.

1.03.3 SHOP DRAWINGS AND INFORMATION REQUIRED

A. Eight copies of the manufacturer's shop drawings for the following apparatus, giving full fitness and other pertinent facts, shall be submitted to PRASA'S representative and their approval secured before apparatus in question is ordered, built or installed:

1. Transfer Switch

2. Main Breaker

B. Material installed of work performed without approval of shop drawings shall be done at the risk of the Contractor and the cost of removal of such material or work which is judge unsatisfactory for any reason by the Authority's representative shall be removed at the expense of the Contractor.

C. The approval of shop drawings in no way relieves the Contractor from the requirements of the Contract Documents.

D. Submittal shall be in neat, brochure form and shall contain a complete list in index form, of the manufacturer's name, cuts of equipment, dimensions, performance data, catalog numbers and trade names as required to properly identify the materials and equipment to be furnished. Each item shall be properly identified by reference to item number or paragraph in the Specifications or call out on the plans. Any deviation from an item as specified hall be clearly noted on the submittal.

E. Power distribution and control equipment drawings shall show elevations, plan layouts, dimension, construction details, elementary diagrams, connection and interconnection diagrams and bills of materials. Motor control panel diagrams, motor controller diagrams and "package drive" diagrams shall be of the elementary type and shall show the terminal identifications and the associated field connection for each drive. Each line shall be numbered in a sequential manner and all relays shall have their contact location summary on the line with the relay coil (see JIC Standards). Inter connections with other systems shall be clearly shown and completely identified

F. The Contractor shall provide and submit for review complete interconnection diagrams for all equipment. Interconnection diagrams shall show terminal blocks of all distribution and control assemblies, all power, control, and signal raceways, junction and pull boxes, all field devices, and 11 interconnecting wiring. Diagrams shall show conduit and wire numbers, conduit sizes, and power

wire and able sizes. Interconnection diagrams shall be prepared in a neat and legible manner in accordance with ANSI drafting standards.

G. Equipment layout drawings and diagrams shall be submitted on the manufacturer's standard sheet size closest to 22 inches by 34 inches overall Supplementary drawings may be on ll"-xl7"- or 17"x22" sheets subject to acceptance by the Engineer.

H. Equipment Data Submittal. Assemble and turn over to the Engineer in logically arranged brochures and/or folders, all instruction bulletins, lubrication schedules, operation instructions, parts lists, pamphlets., etc., for electrical equipment and apparatus by the Contractor.

1.03.4 RECORD DRAWINGS AND INSTRUCTION BOOKLETS

A. The Contractor under this section shall complete and exact detailed record of all changes in the electrical installation that take place during the progress of the work as follows:

1. Plans. The plans shall include detailed drawings of all the electric systems, showing the methods of connection, wiring diagrams, etc., to he extent that any competent person can trace the wiring therefrom. Drawings shall be kept current with the work and subject to inspection by the Engineer at any time. The corrected set of drawings shall be delivered to the Authority after approval by the Engineer and prior to the fin 1 payment to the Contractor.

The Contractor shall provide additional detailed drawings of complex areas, as required, showing larger scale layouts or sections of numbered conduit runs and embedments with locations suitably dimensioned.

2. Diagrams. All diagrams required under "Submittals" shall be corrected to the final as built state of all equipment and delivered to the Engineer either on original vellums or as transparent reproducible prints prior to final acceptance of the work.

3. Instructions. The Contractor shall also keep a file containing all instructions booklets and instructions furnished by the manufacturer with their respective equipment and at the completion of the job, shall turn the same over to the Authority. Three copies of each instructions booklet or set of instructions shall be provided.

1.03.5 REGULATORY REQUIREMENTS

1. Codes and Standards of the following organizations may be referenced in this section and shall be considered as minimum acceptable for the installation:

a) The completed Installation shall comply with all applicable requirements of the National Electrical Code (NEC), latest edition, the Puerto Rico Electric Power Authority (PREPA) Standards, the Occupational Safety and Health Act of 1970 (OSHA) and the requirements of any local codes effective in the Commonwealth of P.R.

b) American National Standards Institute, Inc. (ANSI)

c) Puerto Rico Planning Board (PRPB).

d) Institute of Electrical and Electronics Engineers, Inc. (IEEE)

e) Instrument Society of America (ISA)

f) Insulated Power Cable Engineer's Association (IPCEA)

g) Joint Industrial Council (JIC)

h) National Electrical Safety Code (NESC)

i) National Electrical Manufacturers Associations

j) (NEMA)

k) Underwriter's Laboratories, Inc. (UL)

2. Where in conflict, PREPA latest Standards shall take preference.

3. The Contractor shall obtain all necessary permits, pay all required fees, and the before final acceptance of the work, deliver to the Engineer the necessary certificates showing compliance with all codes and requirements, including certificate of final inspection and approval by the P.R. Electric Power Authority.

1.03.6 WARRANTY

All work performed under this contract shall be guaranteed against fault and improper material and workmanship for a period of one year from the date of Final Acceptance by the Owner, except that where guarantees or warranties for longer terms are specified herein, such longer term shall apply, and the Contractor, at no additional cost, shall promptly correct any deficiencies which occur during the guarantee period all to the satisfaction of the owner.

1.03.7 CONTRACTOR QUALIFICATIONS

A. An acceptable Contractor for the work under this division must have personnel with experience, training, and skill to provide a practical working system.

1.03.8 CONSTRUCTION DRAWINGS

A. The Electrical Drawings are generally diagrammatic and the location of outlets and equipment terminals are approximate in the construction drawings. The exact locations and routing of cables and conduits shall be governed by structural conditions, physical interference, and the location of electrical terminations and equipment. The Contractor shall examine the architectural, structural and mechanical plans and shop drawings for the various equipment in order to determine exact routing and final terminations for all raceways and cables. Conduits shall be stubbed up as near as possible to equipment terminals. Where apparatus and equipment have been indicated on the plans, it means that dimensions have been taken from typical equipment of the class indicated. The Contractor shall carefully check the plans to see that the equipment he contemplates installing will fit into the spaces provided.

Typical control diagrams are shown in order to delineate for the Contractor the basic circuit arrangements he is to use. Functional descriptions may be given for some systems in the Construction Drawings. Guideline control or elementary (ladder) diagrams may also be given the Construction Drawings for some complex systems. The Contractor shall use the diagrams and descriptions, in order to produce the required control diagrams for each systems. The responsibility for interfacing between electrical to instrumentation, mechanical to instrumentation and electrical to mechanical work shall be that of the Contractor.

1.03.9 SCHEDULING.

A. The Contractor shall not undertake any work whatsoever that will interfere with, delay, or halt operations of the equipment without having previously made arrangements with the Engineer.

1.03.10 INTERFERENCES

1. The plans are generally diagrammatic, and the Contractor shall coordinate his work with that of the different trades so that interferences between conduit, piping, equipment, architectural and structural work shall be avoided. Al1 necessary support and bends in conduits, fittings, etc., required to accomplish this shall be installed by the Contractor without additional expense to the Authority.

2. The Contractor shall obtain clearance from the Engineer prior to installing conduits in any location where interferences might develop. If the Contractor should proceed without obtaining such clearance, and interferences develop, the Engineer will decide which equipment, piping, etc., must be relocated, regardless of which was installed first, and such relocating shall be done at no expense to the Authority.

3. In no case shall the Contractor cut, burn or drill any structural member to mount electrical equipment or facilitate conduit installations without having previously received approval in writing, from the Engineer.

1.03.11 MISCELLANEOUS

1. Included in the work is assembly of all parts, pieces, subassemblies, cable, conduit and all other items necessary to complete the installation, which are included with the major equipment or furnished by others.

2. All equipment shall be completely assembled, installed and connected as shown in the Construction Drawings, and shall be fully prepared and made ready for operation. The Contractor may have the use of any special tools furnished with the equipment specifically for installation purposes. Contractor shall either tack-weld equipment to channels or angles, or grout or bolt equipment in place as required, exact method to be approved by the Engineer prior to installation.

3. Where equipment is mounted on walls and/or columns Contractor shall provide structural steel supports and suitable anchors.

4. Where details of supports are not shown in the Construction Drawings, they shall be suitable for the size and type of equipment to be supported and the nature of the mounting surface. Before equipment is set, the foundation and any conduit or other provisions for wiring shall be examined to insure their suitability for the equipment. All equipment shall be carefully leveled and adjusted for proper operation. The accuracy of positioning of equipment shall be within one-eight (1/8) inch of the dimensions shown in the Construction Drawings except where greater accuracy may be required to avoid interferences or to properly line up with other equipment, conduit, foundations, or other items. After installation, all operating parts shall be inspected to assure correct mechanical operating adjustment.

5. Internal wiring within equipment which has been disconnected for shipping purposes shall be connected. After installation, all equipment shall be left in clean condition. In particular, all insulators, bushings, insulating materials, and other parts which are depended upon-heir insulating qualities shall be thoroughly for a11 cleaned. No overall painting of equipment will be required, but housing surfaces which have been soiled or marred shall be touched up or refinished with primer and color coat.

6. In general, provision for conduit or cable entrances will be made in major equipment as furnished to the Contractor. It is expected, however, that in some instances additional drilling, tapping and/or cutting on equipment will be required for conduit or cable entrances to suit particular conditions of installation. Such additional work shall considered as part of the work of electrical equipment installation.

7. The Contractor shall furnish, install and connect electrical equipment such as control transformers, individual motor starters, pushbuttons, etc., shown in the Construction Drawings and not covered specifically in other sections of this specifications.

8. Where electrical equipment such as solenoid pressure switches, thermocouples, etc., forming part of a mechanical assembly, is installed by others, the Contractor shall install the external raceways and wiring in conformity with the applicable cable sections of the specifications.

1.03.12 TEMPORARY SERVICE

1. The Contractor shall provide and maintain a temporary electric service for use during the construction period. This service shall comprise the required number of outlets and extension cords with lamps and guards located as required, together with supply wiring run to conveniently located temporary main switch with required fuses. Arrangements for this supply shall be made with the Puerto Rico Electric Power Authority.

2. Temporary service of the same characteristics of final service shall be provided by the Contractor, at his own expense, for performing all tests required by the Engineer or the different trades.

PART 2. PRODUCTS AND EXECUTION

2.01 GENERAL

A. Materials. All materials shall be new, free from defects, or current manufacture, and of the quality specified or shown, and shall be listed by the Underwriters Laboratories, Inc. (UL), where applicable, for the purpose for which it is to be used. Each type of material shall be of the same manufacture and quality throughout the work.

B. Mechanical Equipment. Equipment provided by the Contractor that has electrical power or control devices attached to or forming a part of the unit shall conform to JIC, Electrical Standards for Mass Production Equipment, latest revision.

C. Corrosion Protection. Unless otherwise noted, all equipment and appurtenances provide under this section shall be treated with zinc phosphate, bonderized, or otherwise give a rust preventive treatment, the primed and painted with a durable enamel finish.

Galvanizing, where specified, shall conform to that required in another section of this specification. Galvanized equipment and appurtenances shall not be shop primed or painted.

All structural and miscellaneous steel used in connection with electrical work and located out-of-doors, in pump rooms, pipe galleries or other damp location shall be hot-dip galvanized unless otherwise specified. Included are underground pullbox covers and similar electrical items if so required.

Galvanizing shall average 2.0 ounces per square foot and shall conform to ASTM-123.

Where thermal-epoxy finish is specified or allowed in lieu of galvanizing, the coating shall be applied over a clean sandblasted surface and shall be at least 5 mil in thickness. The finish shall be light gray in color (ANSI-61).

D. Storage. The Contractor shall provide the storage facilities and protect all work, materials and equipment from damage during the progress of the work. Materials and equipment shall not be stored exposed to the weather. The Contractor shall replace all damaged or defective work, materials and equipment without additional cost to the Authority.

E. Hazardous Area Classification. The electrical equipment provided, and the wiring methods used in the Wet Wells, shall conform, as a minimum standard, to the requirements of the applicable electrical code for Class I, Group D, Division 1 locations, and in addition, the equipment shall be suitably protected from the effects of flooding and corrosion.

F. Relocation of existing electrical installation (if necessary). Contractor shall relocated any existing conduit or equipment that may interference with new installation shown on plans. Said work shall be done at the expense of the Contractor.

G. Protection

1. During the installation period until the work is finally accepted, the electrical contractor shall properly and adequately protect all items of equipment and raceway which he installs, from the adverse effects of water, dampness, dust, falling objects and injury due to the activities of his own workmen and others. In the event that damage occurs to equipment due to negligence by the Contractor, the Contractor shall at his own expense replace, repair or have repaired, the damaged item subject to the approval of he Engineer.

2. Doors on electrical equipment shall be kept shut to prevent entrance of dirt. Electrical enclosures shall not be used as a storage place for tools, clothing or lunch boxes.

3. The Contractor shall energize the space heaters in motors as soon as plant power is available.

4. The Contractor shall keep his area of work free of packing cases, scrap wire and debris.

H. Installation

1. All electrical work shall be performed by workmen skilled in the electrical trade and licensed for the work by the local authority.

2. Execute the work in the best manner to assure ease of operation and maintenance, as well as satisfactory performance. Guarantee that the materials and workmanship provided under this section will be of the best grade, that the various system will be completely ready to operate when turned over the owner and that they will include all labor and materials required to make this so, although not specifically indicated or mentioned herein. The PRASA'S representative has the power to reject any work and/or materials which in his judgment do not meet the contractor requirements.

3. Install the work in accordance with construction schedules.

4. Maintain a competent project manager in charge of the Work at all times, and facilitate its inspection by the owner appointed representative.

5. Pile all rubbish and arrange for its removal.

6. The Electrical Contractor shall obtain a complete set of the Construction Drawings and check them to avert any possible installation conflict between the electrical part and other trades. Should any change from original Drawings be deemed necessary the Contractor shall notify the Engineer and obtain written approval before the Work is performed.

7. Examine before commencing work all adjoining work on which the work of this section is in anyway dependent for perfect execution and report to the PRASA'S representative any condition which prevents the performance of First-Class work.

8. Discrepancies shown on different plans or between plans and actual field conditions, or between plans and specifications shall promptly be brought to the owner's representative attention for a decision.

2.02 TEMPORARY POWER

1. The Electrical Contractor shall furnish and place proper guards for prevention of accidents. He shall provide, maintain, and remove after construction is completed a temporary power and lighting system. He shall coordinate the characteristics of this system with the General Contractor.

2.03 TRENCHING

A. The contractor shall provide trenching, concrete encasement of duct and conduit, back-filling and compaction for the underground electrical system, all in accordance with applicable sections of this Specifications and with the regulationf of the Puerto Rico Power Electric Company. Trenches and other excavations shall be sized to accommodate the conduits and other required facilities. Additional space shall be provided to assure proper installation and access for inspection. Unless otherwise specified, or required by the PREPA, the minimum depth of cover over conduits shall be as follows:

1. Electrical conduit - 600mm(24 inches), 900mm(36inches)under roadways.

The bottom of trenches shall be true to grade and free of protruding stones, roots, or other matter which would prevent proper bedding of pipe or other facilities. Trenches and excavations shall be backfilled so that the specified thickness of topsoil is restored to the upper part of the trench. Trenching operations, bedding and backfill shall conform to Section 02A050 Unclassified Excavation and Fill Control.

2.04 CUTTING AND PATCHING

1. The Contractor shall perform all cutting and patching of the construction work, walks, pavement and buildings, floors and walls required for the proper installation of electrical work. All patching shall be of the same material, workmanship and finish as existing and shall match surrounding work to the satisfaction of the Engineer.

2. Contractor shall furnish to the other trades the necessary information so that the necessary openings for the works can be built into the floors and walls in time. Such cooperation is required to keep the cutting of walls and floors to a minimum.

3. Contractor shall set sleeves for conduits and ducts accurately before concrete floors are poured. Should this contractor neglect to perform his Preliminary work, and should cutting be required in order to install his conduits, ductwork or equipment, the expense of this cutting and restoring of surface to their original condition shall be borne by him.

2.05 CONDUITS

A. General

1. All wiring, unless otherwise noted, shall be installed in corrosion resistant conduit. Each 10 feet length of conduit shall bear the manufacturer’s trade mark and UL label on stamp.

2. The minimum size of conduit for lighting, receptacle and telephone branch circuits shall be ¾".

3. The minimum size of conduit for control circuit shall be ¾".

4. The size of conduits are indicated in the Construction Drawings.

5. Branch circuits shall be as indicated on Construction Drawings.

6. All conduits installed outdoors, below the finished grade level, for area lighting standards, power, control, telephone, lighting and receptacle branch circuits wiring shall be rigid, high impact, heavy wall PVC schedule 40 conduit, U.L. listed, for underground concrete encasement applications, in accordance with NEMA TC 2-1970 specifications. Underground conduit shall be protected within a proper sized concrete envelope as indicated on Construction Drawings and other part of these specifications.

7. All exposed conduit risers for power, control, telephone, lighting and receptacle branch circuits, emerging exposed from under finished grade level or floor slab, shall be full weight, zinc coated, hotdip galvanized rigid steel conduit.

8. The above transition from PVC to galvanized conduit shall be done at 1' - 0" minimum below the finished grade level or floor slab with an appropriate fitting. A 9" high protective parapet shall be constructed at the base of all emerging underground conduit. This parapet shall be initiated at 1'-0" minimum below the underground level. <u>This will be a must in the installation.</u>

9. All conduits for power, control, telephone and lighting branch circuits wiring, to be supported to the structural members of the outdoor or indoor plant equipment, and that to be supported to the bottom part of the roof joists, in areas with or without hung ceiling, shall be weight, zinc coated hot dip galvanized rigid steel conduit provided with an external 40 MILS bonded PVC coating for corrosion protection. The conduit shall comply with the above describe specifications.

10. All conduits for power, control, telephone.. lighting and receptacle branch circuits wiring to be concealed within the ceiling, wall and/or floor concrete slabs shall be full weight, zinc coated hot dipped galvanized rigid steel conduit. The conduit shall comply with the above describe specifications.

B. Installation.

1. Conduit runs are shown diagrammatically in the Construction Drawings.

2. These conduit runs may be modified to suit field conditions but in no case they shall modify circuit runs. No conduit run shall be wired with more than three single pole circuits or its equivalent unless otherwise indicated in the Construction Drawings.

3. Control conduits runs indicated in the site plant and in the single-line diagrams are schematic and does not necessarily indicate the exact quantity required for a particular application. The proper quantity required shall be selected in correspondence with the equipment manufacturer schematic diagrams and instructions to be finally approved by the PRASA Engineer.

4. All instrumentation, AC metering, DC Control , AC Control , Lighting and power circuits wiring shall be installed in separate conduit runs properly identified. This will be a must for the installation.

5. Combining of circuit wiring in conduit other than as detailed in the Construction Drawings and wire and conduit schedule, shall not be permitted.

6. It is the intent of this Specifications to provide the maximum possible isolation of one group of conductors from the other; therefore, the use of pull boxes, highhats, wireways, etc. common to various conduits shall be limited only to that which is detailed in the Construction Drawings or approved by the PRASA Engineer.

7. Before installation the interior of all conduit, conduit bends, and fittings shall be inspected and cleaned of all dirt, cuttings and other foreign materials.

8. Conduit shall be installed with minimum of crossing, bending, and cutting.

9. When conduits are installed, where no location dimension are given in the Construction Drawings, approval of the locations of these conduits shall be obtained from the PRASA Engineer.

10. All conduits are to be run in general , in a concealed manner except where otherwise noted on Construction Drawings. Concealed conduits shall be run in a direct line with long sweep bends and offsets. Where they have to be run in structural beams or floors they shall be installed in the neutral axis of the structure.

11. A conduit expansion fitting shall be installed in each concealed run whenever it crosses an expansion joint in the structure to which it. is attached. The center of the fitting shall be placed in the center of the joint, between the two section of the concrete. Fittings shall be as manufactured by O.Z. Manufacturing Co., Type “DX” or approved equal.

12. All exposed conduit shall be run parallel to and at right angles to building lines diagonal runs will not be permitted. Exposed conduit shall be securely fastened in place at no more than four feet centers, and hangers, supports or fastenings shall be provided at each elbow and at the end of each straight run terminated at a box or cabinet. Where riser conduit pierce floor slabs, they shall rest on each floor with approved riser clamps. horizontal conduit runs in groups may be supported by beam clamps, special brackets or adjustable common trapeze hangers. Conduit in hung ceilings shall be adequately supported by means of clamps, pipe straps or heavy iron tie wire to the structural members supporting the ceilings. Powder driven studs or lead type anchors shall be based on the combined weights of conduits, hanger and cables.

13. Conduits shall not be fastened to such members of steel structures as are marked “removable” on the structural drawings. Conduit hangers shall be supported from buildings and structures and not from equipment.

14. Conduit banks run on main pipe racks shall run above pipelines. Conduit running adjacent, below, or crossing hot pipelines shall have a minimum of 61, spacing from pipe covering.

15. Conduits shall be installed, wherever possible, in such manner as to avoid the collection of condensed moisture in the conduit. Drain fittings shall be installed at low points in exposed conduit runs.

16. Pulling points shall be provided in each conduit run to conform with the requirements of applicable regulations and as otherwise required by unusual conditions. Pulling points shall be provided for straight conduit runs in excess of two hundred feet. The equivalent of three 90 degree bends may be used in any run of 50", or less, the number of permissible equivalent 90 degrees bends being reduced by one for each additional 50", or faction thereof for longer runs.

17. Conduit fittings type C, L, T and X shall be used as junction points for pulling conductors sized #2 A.W.G. and smaller. Pull boxes, pull type conduit or type LBD conduit fittings shall be used for pulling conductors larger than #2 A.W.G. Boxes shall be used for splicing and tapping cable and those not required to be explosion proof shall be furnished with neoprene gaskets.

18. Conduit seals and drains shall be installed in accordance with Article 501-5 of the National Electrical Code, latest edition. Sealing methods shall be in accordance with the recommendations of the seal manufacturer. The pouring of compound into conduit seals shall be performed in strict accordance with the manufacturer's instructions. Conduit seals shall be poured only after wiring is tested.

19. All conduit joints shall be cut square with a hacksaw/or specially approved cutter, reamed smooth, with sharp edges and all burrs removed. The cut shall be perpendicular to the axis of the conduit.

20. All joints shall be threaded, using standard coupling unless otherwise designated in the Construction Drawings. Running threads will no be permitted. When reaming out ends to remove burrs and rough edges, care shall be exercised to avoid excessive reaming with resultant weakening of the conduit wall at the end.

21. Where conduit with tapered threads cannot be coupled with standard conduit couplings Erickson couplings shall be used.

22. All joints shall be make up tight and with a minimum of wrench work in order to avoid wrench cuts. A strap wrench shall be used on PVC coated conduit.

23. All threads cut in galvanized conduit and the throat of same shall be thoroughly painted with a coating of Rustoleum primer. Wrench marks shall likewise be given a proper coating of PVC Touch-Up Compound. Threads cut during installation shall be clean and shall conform with pipe threads standards.

24. Particular care should be taken to cut conduits of the proper length so that the ends will fit exactly into the outlet boxes and cabinets. All terminations at cabinets and panels shall be made so that conduits enters perpendicular to side of panel and shall be secured to it with locknuts and bushing in such a manner that each system is electrically continuous throughout.

25. All bushings smaller than 1-1/4" shall be galvanized metal type. Bushings f or conduits l-1/4" or larger shall be of the metal and plastic type as manufactured by O.Z. Mfg. Co, Type "B" or Type "BL" or approved equal.

26. The Electrical continuity of metal raceway which contains any conductor or more than 250 volts to ground shall be assured by using: two locknuts, one inside and outside of boxes and cabinets, bonding bushings or any other approved method.

27. Conduit ends shall be capped by an approved method to prevent entrance of foreign materials during construction. On outdoor stub-up-conduits a threaded steel conduit cap is mandatory.

C. Conduit Bends

1. Conduit bends and elbows for conduits up to 1 inch size can be made on the field with approved bending tools. For larger size conduits, manufactured elbows must be used. Exception is made when the PRASA Engineer gives authorization of the Contractor to make bends and elbows at site provided that approved equipment is used for this purpose. Bends and elbows made on the field shall be round and smooth and their radius shall be not less than 6 times the internal diameter of the conduit.

2. Bends in metallic conduit shall be made while cold and in no case shall conduits he heated. Conduits shall not be bent through more than 90 degrees.

3. Changes of directions in embedded conduit runs shall be make with "sweep" bends wherever possible. Conduit bends shall have a minimum radius of twelve times nominal diameter in sizes through three inches and ten times nominal diameter in sizes larger than three inches.

4. Where a group of exposed conduits change direction, the bends shall have a common center in order to maintain the uniformity and neat appearance of the group, having regard f or the minimum bending radius of the largest conduit in the group.

5. Bends shall be of uniform radius and free from cracks, crimps or other damage to the pipe or its coating and shall not unduly flatten the pipe section.

6. Length of conduit runs as well as number of bends shall be in strict compliance with the N.E.C.

D. Conduit Grounding. The entire conduit wiring system shall be thoroughly grounded in an approved manner. Ground wires shall be suitable protected from mechanical injury.

E. Approved Manufacturers

Robroy Industries (Plastic Coated Conduit Division)

Triangle PWC Inc. (Protective Coating Division)

Industrias Vasallo (PVC Conduit)

2.06 FLEXIBLE CONDUIT CONNECTIONS

A. Liquidtight Flexible Metallic Conduit

1. All connection to motorized and vibrating equipment shall be done with liquidtight flexible metallic conduit provided with appropriate raintight fittings.

2. Liquidtight conduit shall be formed from spirally wound galvanized steel strip with successive convolutions securely interlocked. A polyvinyl chloride jacket shall be extruded over the lining to produce a flexible watertight oil resistant raceway. Minimum size shall be ¾ inch. Liquidtight conduit shall be type UA-O.R.

3. An equipment bonding jumper shall be required around Liquidtight flexible metal conduit, in accordance with 1999 NEC.

4. Approved Manufacturers: OZ/Gedney and Anaconda "Sealtite" or approved equal.

B. Explosion-Proof Flexible Conduit

1. Use flexible "x"-plosion proof type of connection in lengths up to 24 inches where so indicated in the Construction Drawings. Longer sections may be used where so deem necessary.

2. Approved Manufacturers: Appleton type EX, Crouse Hinds Type EC or approved equal

2.07 CONDUIT SUPPORTS

A. Conduit Clamps

1. Conduit clamps shall be heavy duty, of the one hole type, of cadmium plated or galvanized malleable iron. Clamp backs and nesting backs shall be of similar material and finish.

2. All clamps shall be painted with 2 coats of a Rust Oleum corrosion inhibiting paint. prior to its installation.

3. Clamps shall be placed not farther apart than 4 feet.

B. Ceiling Hangers. Ceiling hangers for single conduit shall be of the heavy duty, adjustable, wrought steel , clevis or ring type with U.L. listing. Hanger rods shall be ½ - inch minimum all-thread rod. Hangers and rods shall be hot-dip galvanized after fabrication. Paint hangers with 2 coats of a Rust-Oleum corrosion inhibiting paint prior to installation.

C. Racks. Racks shall be constructed from framing channel. Channels and all associated hardware shall be steel, hot-dip galvanized after fabrication. Field cuts shall be regalvanized by the Gal-A-Weld process or by Gal-Van-Ize as manufactured by Lawson Products, Inc. or approved equal. Channels attached directly to building surfaces shall be 14-gage- minimum thickness, 1-5/8 inches wide and not less than 1-5/8 inches deep. Channel section shall be sufficient to limit deflection to 1/360 of span. Rack framing channels and accessories shall be as that manufactured by Globe Strut, Unistrut or approved equal.

2.08 SLEEVE, INSERTS, OPENINGS

A. The Contractor shall layout and install all required material and/or equipment in advance of pouring concrete floor, walls and roofs. He shall furnish and install all necessary sleeves, or openings through floors or walls required for passage of all conduits, pipes or ducts to be installed by him.

B. Sleeves in floor slabs for conduit shall be make of galvanized sheet steel, securely fastened in position. Sleeves shall be set with their top and set at least two inches above finished floor. In addition, where sleeves pierce slabs or walls separating machine room areas or other quiet areas, sleeves shall be packed with Fiberglass Insulation to prevent noise transfer. Sleeves in Electrical Closets shall be packed with approved materials to provide fire barrier.

C. The contractor shall furnish and install all inserts and hangers required to support conduits, pull boxes, lighting fixtures, when so required, etc.

D. If any material and/or equipment is not properly installed the contractor shall do all necessary cutting and patching at his own expense to rectify the errors.

E. The Contractor shall furnish and install expansion and vibration fittings when so required.

2.09 DUCT BANKS

A. General

1. The electrical contractor shall furnish and install an underground duct system as shown in the Construction Drawings. The Contractor shall be responsible for all excavations, draining of trenches, forming of duct assembly and protective concrete envelope, backfilling and removal of excess earth.

2. Ducts shall be PVC schedule 40 plastic conduit of the sizes shown in the Construction Drawings as described in other part of these Specifications. All joints shall be water-proof according to manufacturer's recommendations.

3. All conduits shall be encased in a concrete envelope with a minimum thickness of three inches at top, bottom and sides. Concrete mixture shall be for a 1,200 lbs. strength, with ½ inch coarse aggregate.

B. Installation

1. Banked conduits shall be held securely in place at a minimum separation of two inches between conduits, by approved spacers installed at four feet intervals, or as recommended by the manufacturer to prevent deflection of conduits.

2. Where the concrete duct envelope crosses roadways, soft fills or other utility mains, it shall be reinforced with 5/8 inch steel reinforcing rods laid at the bottom of the conduit envelope. Number of rods shall always be one more than the number of conduits in the bottom layer, and shall be laid parallel to the conduit run. Reinforcing shall extend three feet beyond area requiring additional protection.

3. Where conduit terminates at, or leaves the masonry, it shall be carefully and firmly positioned by means of a suitable construction template. A PVC-to-steel adapter shall be installed in each conduit leaving the masonry.

4. All conduits shall be temporarily plugged with a cap to prevent the entrance of any foreign matter or concrete in the conduits. The cap is to remain until the cables are ready for wiring. Spare conduits shall be left capped.

5. All conduit terminations shall be located as shown in the Construction Drawings. The accuracy of location shall be within one quarter inch of dimensions shown in the Construction Drawings except where greater accuracy may be required to avoid interference with other conduits or other items or to allow proper spacing and clearances for fittings or attachment to devices.

6. The underground conduit system shall be run at 36" below grade. Embedded conduit shall be run as directly as possible from point to point with a minimum of length and a minimum amount of bending. Embedded conduit shall be firmly fixed in place to avoid being disturbed during the pouring of concrete. Underground conduits for primary lines shall be run at 48" below grade.

7. All parts of the conduit system shall be protected against damage during construction. All conduits shall be securely fixed in position to avoid displacement due to other construction activities and subcontractor shall maintain conduits in their required positions until concrete operations have been completed.

8. The "built-up" method of laying conduit shall be used. This method consists of laying conduit in trench on base spacers and intermediate spacers. The full height of the conduit formation shall be erected properly tied together and braced before pouring the concrete envelope.

9. The base plastic spacers should be placed crosswise in the trench at approximately 5 foot intervals and leveled to form a grade for the first duct layer. Spacers for succeeding layer of conduit shall be placed directly above the base spacers. At the laying of conduit proceeds, the individual conduits and conduit layers shall be tied together and to one another with pieces of wire and securely anchored to prevent conduit flotation during concrete pouring.

10. The contract pouring shall follow close to and immediately behind the conduit laying crew and poured to the height above top tier of conduits as indicated on Construction Drawings.

11. Liberal and continuous spading and vibrating shall be employed to insure the flowing of concrete between and under individual conduits. The joints in the conduit shall be staggered between layers.

12. The Conduit shall be laid at the elevations specified on Construction Drawings. The pitch of the duct bank has been established for drainage and shall be adhered to slope shall be 1% minimum. There shall be no dips between manholes which will collect water and prevent complete drainage.

13. After completion of the conduit bank, each conduit shall be tested for clearance with a mandrel not less than 12 inches long and having a diameter of ¼ inch less than nominal diameter of the conduit if the run is straight. If the run is curved, a tapered mandrel shall be used having a length

of 6 inches and end diameters of ¼ and ½ inch less than conduit diameter. After the mandrel test, the ducts shall be cleaned by pulling through a brush or swab. Test shall be witnessed by the PRASA Field Construction Engineer to make certain that no particles of earth. and or gravel have been left in the duct prior to wiring.

14. Above each underground installation and approximately 24 inches below grade, install a six inch continuous yellow marking tape imprinted on both sides with the words "Caution-Buried Electric Line Below".

15. After all wiring is completed the conduit runs shall be provided with a watertight seal at the ends. Wiring work shall follow all the requirements described under the specifications f or Low Voltage Insulated Conductors and Cables.

2.10 RACEWAY FITTINGS

A. Locknuts. Locknuts shall be extra heavy electrogalvanized steel through 2 inches. Locknuts larger than 2 inches shall be electrogalvanized of malleable iron.

B. Bushings

1. **General.** Bushings shall be electrogalvanized steel or malleable iron with a molded phenolic or nylon insulating collar. The insulation shall be black in color indicating a UL temperature rating of 150*C.

2. **Grounding Bushings.** Grounding insulating bushings shall be provided on all conduit containing grounding conductors or conductors with voltages to ground of more than 120 volts. These bushings shall have bodies, threads and conduit stops Of steel and shall have integral lugs into which a bare grounding wire can be assembled without threading. They shall have minimum profile stain less connectors for the grounding wire and have black, contour molded, 150'C insulating collars.

3. **Bushed Fittings.** Bushings for protection of cables passing through metal boxes or troughs shall be of the black, 150,C, high impact thermoset phenolic type.

C. Expansion Fittings

1. Expansion fittings in exposed runs shall be of the weatherproof type and shall be provided with an external bonding jumper. The expansion fittings shall allow for 4 inches longitudinal movement and shall be designed so that when completely assembled the end of each conduit entering the fittings is bushed. Fittings shall be Appleton. Type "XJ", Crouse-Hinds, OZ/Gedney or approved equal.

2. Expansion fittings in embedded runs shall be of the watertight type and shall be provided with an internal bonding jumper. The expansion material shall be neoprene and shall allow for ¾ inch movement in any direction. Fittings shall be Appleton, Crouse-Hinds, OZ or approved equal.

D. Liquidtight Connectors. Connectors for liquidtight conduit shall be heavy cadmium plated malleable iron. An approved grounding insert shall be part of the unit. Forty-five degree and ninety

degree fittings shall be used where applicable. Liquidtight connectors shall be by OZ/Gedney Electric, Appleton or approved equal.

E. Unions. Unions shall be of the type designated as UNF or UNY and shall be suitable for use in hazardous locations as well as moist atmosphere. Union shall be of cast ferrous alloy electroplated with zinc.

F. Seals. Seals for conduit systems in hazardous atmosphere locations shall be of hot-dip galvanized cast ferrous alloy and each seal shall be of suitable configuration for the individual circumstances. Sealing compound shall be UL approved for explosion sealing fittings and shall be of the same manufacture as the fittings.

G. All Raceway fittings shall be painted with a coat of Rustoleum primer and 2 coats of PVC touch-up Compound final prior to installation.

2.11 LOW VOLTAGE INSULATE CONDUCTORS AND CABLE

A. General. Low Voltage Insulated Conductors and Cable for Power, Branch Circuits, Control and Panel Wiring shall be in compliance with this Specifications and with Nema Standards WC3, WC5, WC7 and WC8, and UL requirements. All conductors shall be soft drawn copper conforming to ASTM Specifications**.** All conductors shall be consist of Class B Stranding covered with 600 Volt insulation.

B. Power and Branch Circuits Conductors. The following shall apply unless otherwise indicated in the Construction Drawings.

1. Power and Branch Circuits Minimum Sizes and Insulation type shall be as follows:

CIRCUIT	SIZE	INSULATION TYPE
Lighting and Receptacles	No. 12	THHN/THWN
Receptacles with Ground Fault Interrupters	No. 12	THHN/THWN
Power, Including Neutral	No. 10	THHN/THWN
Grounding	No. 12	THHN/THWN

2. All conductors Sizes higher than No. 10 shall include type of Insulation as follows:

CIRCUIT	INSULATION TYPE
Power Including Neutral	THWN
Grounding	THHN/THWN

3. Control and Panel Wiring Conductors

a) Control Conductors, to be installed in conduit, shall be no. 14 AWG minimum size with THWN Flame retardant, Moisture and Heat Resistant Thermoplastic Insulation for 90°C max. operating temperature, or approved equal.

b) Control Conductors for Panel Wiring shall be no. 14 AWG minimum size with insulation and application as follows:

TYPE	INSULATION	APPLICATION
MTW	Moisture, Heat and Oil Resistant Thermoplastic	General Panel Wiring

4. Special Conductors

a) When Special Conductors be required for connection of any specific control accessory, instrumentation or specialty equipment, the cable shall be furnished by the Equipment manufacturer subject to the acceptance of the PRASA Engineer.

b) Where conductors are to be located in excessive high temperature areas, high temperature insulated conductors must be used as directed by the Equipment Manufacturer.

5. Portable Cords

a) Portable cord, when so required, shall be heavy-duty, neoprene jacketed flexible cord. Cord No. 10 AWG and smaller shall be 600 watt, NEC type SO, Cords larger than No. 10 AWG shall be Bureau of Mines, Type G. All portable cords shall contain a grounding conductor.

b) Proper fittings for terminating the cord shall provide a watertight seal between the cord and the terminator and between the terminator and the mounting hub. The cable terminator shall be provided with a neoprene liner which grips the card jacket when the back-nut on the fitting is tightened. In addition, on all pendent cord applications and other applications where called for, a stainless wire mesh cord grip shall be provided as an integral part of the terminator.

6. Conductor Identification

a) All phase, Neutral, Grounding and Control Conductors shall be consistently identified thruout the Conduit System of the Project as follows:

System	Service	Conductor	½" Plastic Ribbon Marking at each end of Conductor
480 VAC 3-Phase, 4W	Phase A	Yellow	PH A
	Phase B	Orange	PH B
	Phase C	Brown	PH C
	Neutral N	White	N
	Grounding	Green	---
240/120 VAC 3-Phase, 4W	Phase A	Black	PH A
	Phase B	Red	PH B
	Phase C	Orange (Teaser)	PH C
	Neutral	White	---
	Grounding	Green	---
Control		Brown, Orange, Yellow, Black, Red Blue, Violet and Grey	

b) All phase A, Phase B, and Phase C conductors shall be consistently identified in all equipment and Switchgear terminals and busses thruout the Project.

7. Conductor Installation

a) All wire and cable shall be new and delivered tot he project in complete coils or reels. Its size, insulation type and manufacturer's name shall be permanently marked on the conductor jacket at regular intervals.

b) Cable on reels and wire in coils shall be protected from damage by construction activities. Cable shall be stored in a clean, dry area. When stored he ends of cables on reels for a period of time, the shall be taped.

c) No conductor shall be installed until the raceway system has been completed.

d) Conductors shall be unreeled or uncoiled slowly in order to prevent damage to the insulation of sheath due to sudden bending. Repeated bending shall be avoided. Sharp kinks shall be avoided in unreeling, uncoiling and pulling. Manufacturer's minimum bending radius recommendations shall be observed.

e) Only approved pulling cable lubricants shall be used.

f) The pulling of wiring into conduits or other raceways shall be done with all possible care. The cable reels or coils shall be set up in such a way that the conductor may be trained into the raceway as directly as possible with a minimum number of changes of direction or amount of bending. The raceway termination shall be provided with a protector to guard against damage to the conductor covering. Where several cables are contained in one conduit., all such cables shall be pulled in together.

g) The cables shall be pulled into the ducts designated in the Construction Drawings. The pulls shall be made with equipment which will permit continuous smooth pulling so as to avoid excessive tension on the cable. Sufficient slack shall be allowed at each manhole, pullbox, and terminal to allow for racking, splicing and connection.

h) Cable pulling tensions shall not exceed recommended values. All conductors shall be terminated and spliced in strict accordance with the manufacturer's recommended methods.

i) No splices shall be made except at outlet of junction boxes, only when such splices are necessary. Wires shall be continuous between boxes. Not splices shall be allowed in cables for pumps.

j) Wiring work extending out of floors, walls, etc., that will be exposed to possible damage, shall be boxed in or otherwise protected, after installation.

k) Should it become necessary to install any parts of the wiring system in locations where there is possibility of damage due to other construction activities, suitable precautions shall be taken to prevent damage.

l) All wiring in cabinets, panel boards, etc., shall be neatly formed, grouped and provided with plastic ties, or small plastic wireways.

m) Conductors of different systems, at different voltages, shall not occupy the same pullbox or conduit.

n) Allowance has been made in the Design for the number of raceways and conductors which the Consulting Engineer considers minimum for feeding the basic systems and equipment. if the Contractor's installed equipment is of larger horsepower than shown, or if the characteristics require increased current, the Contractor shall resize the power conductor and raceways to allow for the changed conditions. He shall submit the information for review prior to installation. The Contractor shall provide conduits and wiring to meet the requirements of all equipment and devices in the plant.

o) The Contractor shall make the final sizing of conduit after he has completed the required diagrams and determined the exact conductor count. At least one spare control conductor shall be provided for every four conductors utilized. Unless otherwise shown, no spare conductors are required for applications having three or less active conductors.

p) Spare wires shall be terminated in proper terminal blocks and identified with specified tagging except in small fittings such as control stations where there is inadequate space. In such cases the spare conductor shall be taped and tagged.

q) All conduit sizing shall be in accordance with NEC 40 percent maximum fill. The size of conduit and conductor is not called out for panel board circuits. The Contractor shall size these in accordance with NEC standards which shall be equal or large that specified minimum sizes.

8. Conductor and Cable Manufacturers:

Phelps Dodge, Royal Electric (ITT), Triangle PWC, Inc., Rome Cable and American Insulated Wire Corp or approved equal.

2.12 CABLE AND CONDUCTOR TERMINATING ACCESSORIES

A. Crimp-Type Terminals

a) Crimp-type terminals shall be used in all lighting, power and control conductors up to size no. 6 AWG, to terminate the conductor in the equipment, receptacle or accessory connection bolts. This will be a must for the installation.

b) Crimp-type terminals shall be solderless, uninsulated, tinplated copper of welded seam or tubular construction, of the ring tongue type, of proper wire range and stud size.

c) Terminals shall be fastened to the conductor by identing the terminal sleeve with a proper identing tool of the same manufacturer as that of the terminal.

d) Insulated close and splicing connectors of the crimp-type shall be used for splicing combination of lighting or control conductors in all outlet or auxiliary junction boxes, up to no. 10 AWG size. This will be a must for the installation. Butt-type connectors shall not be used inside boxes.

e) Approved Manufacturers: AMP Special Industries or Burndy "Hydent".

B. Solderless Lugs

1. Solderless lugs shall be used in all power conductors higher than no. 6 AWG to terminate the conductor in the equipment connection bolts.

2. Lugs shall be of one cast' piece high conductivity copper alloy construction, of the hexagonal head bolt or nut-type and of the single, double or triple barrel having 1, 2 or 4 holes as required by the application.

3. Approved Manufacturers: OZ/Gedney "ShureLug" Types "SL", "SLM" or "SLL" and Burndy "Qiklug" Type "QA-B", "Q2A" or "Q3A"

C. Control Conductors Markers

1. Control circuit conductors shall be identified at each equipment or accessory unit terminal to which it is connected with a legible permanent coded wire marking sleeve. Sleeves shall be yellow PVC tubing with machine printed black marking in correspondence with the Construction Drawings terminal nomenclature.

2. All Conductor inside Auxiliary Wiring Boxes shall be properly tagged for identification by using 1 inch diameter brass tags fastened to conductors with nylon cords.

2.13 CABLE AND CONDUCTOR INSULATING MATERIALS

A. General. Conductor tape shall be of the highest quality available for service, UL Approved.

B. Insulating Tape

1. Insulating tape for general application shall be vinyl plastic tape, ¾ inch wide, rated for operating temperature form sub-zero to 80 degrees centigrade.

2. Insulating tape shall be Scotch 33 as manufactured by the 3M Company or approved equal.

3. Filler Tape

a) Electrical Filler Tape shall be used for filling and shaping irregular connections.

b) Electrical Filler Tape shall be self-fusing, insulating, ¾ inch wide to be used on cables whose operating temperature can reach 130 degree centigrade.

c) Filler Tape shall be Scotch .23 as manufactured by the 3M Company or approved equal.

2.14 AUXILIARY WIRING BOXES

A. Pull Boxes to facilitate the pulling of control and power conductors wiring shall be furnished and installed where indicated in the Construction Drawings and wherever else such a box may be deemed necessary, providing its location is accessible and approved by the PRASA Engineer.

B. Generally, Pull Boxes, of proper size, shall be installed every 100 feet in a conduit run and shall not be exposed in -finished spaces and, where necessary to do so, reroute these conduits or make other arrangements to meet the approval of the PRASA Engineer. Boxes shall be constructed in accordance with "JIC" Standards.

C. Auxiliary Boxes for control wiring work, indicated to be concealed within concrete parapets designated type "A" and "A-1" on Construction Drawings and in the interior or exterior walls of the building, when so specified, shall be of the flush type, 6 inches square by 4 inches deep, minimum size, of a heavy code gauge, Nema 4, 316 Stainless Steel construction, with screwed gasketed neoprene covers with stainless steel screws, designated for water and dust tightness and quick removal. The covers shall be flush with the plaster surface.

D. Auxiliary Boxes for control and power conductor wiring work, when so required to be supported to the structural members or frames of equipment, shall be of the enclosed surface type, 6 inches square by 4 inches deep, minimum size, of a heavy code gauge, Nema 4, 316 Stainless Steel construction provided with mounting lugs with holes and lift covers with quick locking stainless steel clamps.

E. All Nema 4 Auxiliary Boxes shall be provided with neoprene gasketed, throat insulated, raintight, malleable iron, cadmium plated, female hubs of size to fit conduit, to be equal or approved equal to Appleton "Uni-Seal" Type HUB with hexagonal head design.

F. All Hubs shall be preferably located at the bottom side of the auxiliary box and painted with a coat of Rustoleum primer and 2 coats of PVC Touch-up Compound final.

G. Auxiliary of Full Boxes to be installed above hung ceiling areas shall be 4-11/16 inches square by 2 ½ inches deep minimum code gauge, hot dip galvanized stamped steel with screwed cover. Such boxes shall be firmly supported to the roof structural members of the building and oriented to facilitate the quick removal of the cover.

H. When the Boxes Installation is finished the boxes shall contain no openings, except those into which the conduits passes.

I. Approved Manufacturers: Hoffman and Keystone

2.15 PANNELBOARDS

A. Manufacturers.

1. Manufacturers acceptable contingent upon products' compliance with the specifications:

a) General Electric Company, Schenectady, NY.

b) Westinghouse Electric Corp., Distribution Equipment Division, St. Louis, MO.

c) Square D Company, Park Ridge, IL.

d) Cutler-Hammer Products, Milwaukee, WI.

e) I-T-E Electrical Products (Siemens), Alpharetta, GA.

f) Or approved equal.

B. General

1. Factory assembled dead front type panel boards.

2. Furnish panel boards complete with branch circuit breakers and a main circuit breaker or main lugs only as indicated.

3. Furnish panel boards with full capacity separate ground bus, separate insulated neutral bus and furnish panel boards connected to a 3-phase, 4-wire service or single phase, 3-wire service as indicated.

4. Provide panel boards with the voltage, frequency and current ratings as indicated conforming to NEMA Standard PBI, Federal Specification W-P-115A. U.L. 67, and the N.E.C.

5. Furnish the panel board main and neutral buses, with minimum 98 percent conductivity rectangular copper bars provided with bolted type lugs as necessary.

6. Drill buses to fit either "A", "B" or "C" Phase connectors, and ensure that connectors are interchangeable and installed in a distributed phase sequence.

7. Silver plate buses, connectors and terminals to a minimum thickness of 0.005-in., conforming to the requirements of Federal Spec. QQ-S-365B.

8. Prevent terminal lugs from turning per NEMA standard PBI and ensure they are suitable for the conductor material and size.

9. Provide main bus bracing for each panel board adequate for 10,000 amperes symmetrical short circuit at 240 volts and 14,000 amperes symmetrical short circuit at 480 volts unless otherwise indicated.

C. Circuit Breakers.

1. Furnish bolt-on type branch and main circuit breakers. Furnish frame sizes, trip settings and number of poles as indicated. Clearly and visibly mark circuit breakers with ampere trip rating. Furnish breakers meeting the requirements of F.S. W-C-375B and NEMA AB1.

2. Furnish all breakers with quick-make, quick-break, toggle mechanisms and thermal-magnetic, inverse time limit overload and instantaneous short circuit protection on all poles, unless otherwise indicated. Automatic tripping indicated by the breaker handle assuming a clearly

distinctive position from the manual ON and OFF position. Furnish breaker handle that is trip-free on overloads.

3. Do not use single pole breakers with handle ties or bails in lieu of multi pole breakers.

4. Furnish handle lock device on breakers as indicated to prevent the manual opening of the selected breakers.

5. Furnish padlocking device on breakers as indicated to prevent the opening of indicated breakers.

6. Ensure that voltage and interrupting rating of all breakers in a panel board is not less than voltage and short circuit rating of the panel board main buses, as indicated. Furnish breakers suitable to operate satisfactorily at the frequency indicated.

7. Furnish ground fault interrupter circuit breakers for certain circuits as indicated in the Construction Drawings.

8. Furnish single pole breakers with full module size. Do not install two pole breakers in a single module.

9. Furnish time-current characteristic curves and catalog information and data for each size of breaker furnished.

D. Cabinets.

1. Provide NEMA I cabinets, unless otherwise indicated and without knockouts. Drill cabinets only for the exact conduit entrances and mounting bolts.

2. Finish cabinet fronts, trims and surface-mounted boxes in ANSI No. 61 or 49, light-gray enamel over a rust inhibitive primer. Attach the fronts (exterior trims) to the boxes or interior trims, by 'quarter-turn, indicating trim clamps. Design cabinets for surface or flush mounting as indicated.

3. Unless otherwise specified, construct panel board cabinets of code-gauge galvanized, sheet steel and equip with Cutters of ample size for the risers and outgoing circuits. Ensure that the cabinets do not exceed 78-in. (1,980 mm) in height.

E. Installation.

1. Mount all panel boards such that the height of the top-operating handle does not exceed 6 ft. 6-in. (1,980 mm) from the floor.

2. Hang each door of the cabinet on semi- or fully concealed hinges with a combination catch and lock.

3. On cabinets 48 in. (1,200 mm) high and over, install a 3 point catch assembly latching at top, bottom and approximate middle.

4. Key all panel board locks alike.

5. Provide directory card filled-out.

2.16 EQUPMENT AND DEVICE MARKING

A. Nameplates:

1. Externally mark electrical equipment by means of suitable nameplates identifying each and the equipment served.

2. Provide each piece of equipment with a black phenolic nameplates with 3/16-inch-high white lettering secured to front of equipment. For nameplates size, refer to Division 16 - Electrical.

3. Supply blank nameplates for spare units and used spaces.

4. Actual nameplates legend, which may consist of up to three lines, will be provided by the Engineer on submittals.

B. Nameplates Fasteners. Fasten nameplates to equipment only by means of appropriate noncorroding screws and specified in Section 16012 - Identifications. Stick-ons or adhesives will not be allowed.

C. Nameplates Information. In general, the following information is to be provided for the types of electrical equipment as listed.

1. Switchgear, Motor Contro Centers and Distribution Panelboards: On the mains, identify the piece of equipment, the source and voltage characteristics, i.e., 480 V, 3PH, 3W, etc. For each branch circuit protective device, identify the load served.

2. Transformers: Identify the service source and load served.

3. Panelboards: Identify the service source, panelboard designation and voltage characteristics.

D. Panelboards:

1. Prepare a neatly typed circuit directory behind clear heat-resistant plastic for each panelboard.

2. Identify circuits by equipment served and by room numbers, where room exist.

3. Use equipment names and room numbers selected by the Engineer; names and numbers may be different from those shown on Plans.

4. Indicate spares and spaces with light, erasable pencil markings.

E. Boxes, Small Equipment and High Equipment:

1. Pull boxes and similar items may be marked with Dymo No. 158-4 vinyl embossing tape with adhesive back in lieu of namplates. Use Dymo No. 7123 perma-stick liquid adhesive with the tape. Tape color, placement and spacing must be approved by the Engineer before starting this work. Individually mounted disconnect switches and motor and starters shall be marked with phenolic namplates attached with stainless steel.

2. Provide identification stencils for high voltage equipment and raceways with the legend "DANGER HIGH VOLTAGE". Mark all exposed high voltage raceways every 25 feet.

F. Power Receptacles: Use nameplates or engraved plate to identify power receptacles where the nominal voltage between a pair of contacts is greater than 150 volts with circuit number, voltage and phases.

G. Wall Switches: Engrave the switch plate of the switch with the function of the switch.

H. Boxes:

1. All outlets, junction, pull boxes and fittings shall be galvanized or plated and shall be installed plumb, rigid and in a satisfactory manner with an alignment tolerance of 1/16 inch.

2. Ceiling outlets in slabs and metal pan construction shall be 4 inches octagonal concrete boxes, 2-1/2 inches minimum depth and with ¾ inch K.O. to fit conduit except that when so advisable 4 inches square or larger outlet boxes equipped with canopy cover may be used in lieu of octagonal boxes. Ceiling outlets shall be provided with 3/8 inch fixture stud when necessary to support fixtures. Outlets boxes shall be flush with the ceiling surface. A deep box 2-1/8 inches x 4 inches square with cover shall be used in hung ceilings.

3. Wall outlets for lighting fixtures shall be 4 inches octagonal by 2-1/2 inches deep or 4 inches square with canopy cover with 3/8 inch fixture studs and with K.O. to fit conduit.

4. Wall outlet boxes for convenience outlets, switches and other devices shall be 4 inches square minimum by 2 inches deep minimum with K.O. to fit conduit and equipment with raised covers of the required height and gan, so as to bring them flush with the finished wall surface. The installation of raised covers on the boxes prior to the pouring of the concrete to be plastered is strictly prohibited. In all cases the raised covers shall be installed after thickness. When several switches are indicated in adjacent positions they may be ganged together in an outlet box of the proper size and only one switch plate will be installed. All wall outlets shall be located at the height indicated in the plans.

5. Where outlets at different levels are shown adjacent, they shall be installed in one vertical line where possible.

6. Boxes for other outlets like ranges, special purpose outlets, etc., shall be of the size and type recommended by the manufacturer of the device. Raised covers shall be of the required size and gang; so as to bring them flush with the finished wall surface. When located on columns or over doors, they shall be set symmetrical with the columns or doors.

7. The Contractor shall provide suitable approved junction or pull boxes when so deemed desirable for the insertion of conductors or as indicated. Junction or pull boxes not over 150 cu. inches in size shall be constructed same as outlet boxes of not less than #12 gauge sheet steel. Junction or pull boxes over 150 cu. inches in size shall be constructed same as specified for panelboard cabinets, except that covers may be of the same thickness as boxes secured by screws or bolts instead of hinges.

8. All junction and pull boxes must be accessible after the completion of the building.

2.17 FIELD QUALITY CONTROL

A. Inspection of the Electrical Work. The Contractor shall cooperate with the Authority's Representative and shall provide assistance at all times for the inspection of the electrical work performed under this contract. He shall remove covers, operate machinery, or perform any reasonable work which, in the opinion of the Engineer, will be necessary to determine the quality or adequacy of the work.

B. Test and Acceptance

1. After the wiring system are completed, they shall be tested for short circuits and defects. Any defects appearing shall be corrected before any equipment is connected.

2. Test, both Electrical and Physical, shall be made of the various materials, equipment, and installation comprising the electrical system. Provide all instruments, labor or other facilities required for such tests.

3. Test the operation of all motors, controllers and other electrical apparatus and devices, even though same are not included in the accompanying drawings or herein mentioned. All motors shall be left rotating in the proper manner. All materials and apparatus shall be left in proper satisfactory working conditions.

4. All test shall be made in the presence and approved by the Authority's representative.

5. Retests: Conduct retests as directed by the Engineer of such time duration as may be necessary to assure proper functioning of adjusted or altered parts or items of equipment. Any resultant delay as a result of such necessary retests does not relieve the Contractor of his responsibility under this contract.

SECTION 160610
GROUNDING

PART 1. GENERAL

1.01 SUMMARY

1.01.1 SECTION INCLUDES

A. Furnish and install a single, complete, integrated grounding system, including all conductors, raceways, and connections, specified and indicated.

B. Include grounding of electric equipment enclosures, outdoor substations, transformers, switch structures, etc.; ground grid systems; structural steel, and lightning protection system.

C. Include grounding conductors completely interconnecting ground rods, ground grid, substation, other distribution equipment, and other ground able equipment.

1.02 SUBMITTALS

Submit for approval the following:

1. Manufacturer's literature, specifications and technical data for grounding materials proposed for use.

1.03 QUALITY ASSURANCE

1.03.1 REGULATORY REQUIREMENTS

A. Install complete grounding system in accordance with Puerto Rico Electric Power Authority (Autoridad de Energía Eléctrica) codes, and standards in addition to the National Electric Code.

1.04 REFERENCES

A. American National Standards Institute:

1. ANSI C2: National Electrical Safety Code.

B. National Fire Protection Association, 470 Atlantic Avenue, Boston, MA:

1. NFPA: National Electric Code.

2. NFPA: Lightning Protection Code.

PART 2. PRODUCTS

2.01 MANUFACTURERS

A. Contingent upon products' compliance with the specifications.

B. Ground rods - Copperweld Corporation, 2 Oliver Plaza, Pittsburgh, PA., or approved equal.

2.02 MATERIALS

A. Conductors.

1. Furnish soft drawn stranded copper grounding conductors. Minimum size of unenclosed grounding conductor shall be No. 6 Awg. All conductors shall be protected if physical damage would result from exposure.

2. Furnish bare conductors where buried in earth or where embedded in concrete.

3. In buildings run insulated grounding conductors with green insulation only.

4. Furnish insulated grounding conductors with insulation rated at 600 volts.

5. Furnish grounding conductors for installation in all non-metallic raceway in addition to, and -not to be considered as, the neutral wire of the system.

6. Connect a grounding conductor between panel board and grounding system. Where a grounding bar is furnished with panel board, connect grounding conductor to bar.

B. Ground Bus.

1. Furnish a 2-in. by 1/4-in. copper bar complete with bolted type connectors as indicated. Connect grounding conductors from equipment in area to this ground bus. Connect ground bus to grounding system. Mount ground bus on 600 V pedestal insulators.

C. Connections.

1. Make all buried and concealed ground connections by exothermic welding.

2. Make accessible connections to structural members by exothermic welding process or by bolted connector. Connections to equipment or ground bus by acceptable bolted connectors. Furnish bolted ground connectors suitable for, and. matching, grounding provisions furnished.

3. Furnish copper, brass, or silicon bronze ground clamps for use on copper or brass pipes.

4. Furnish ground clamps, for use on iron pipes, of galvanized or malleable iron, or of standard non-corrosive material.

5. Furnish ground clamps, for use on pipes, with rigid metal base providing good contact by proper seating on the pipe. Do not use strap type clamps.

6. Design cable to ground rod connectors capable of being installed without having to pass over end of ground rod.

7. Where conduits are not effectively grounded by firm contact with a grounded enclosure, apply grounding bushings on at least one end of conduit run.

8. Furnish copper-clad steel or galvanized steel ground rod type, diameter and length as indicated in the Construction Drawings.

2.03 SOURCE QUALITY CONTROL

2.03.1 TESTS

A. Measure ground grid resistance with earth test megohmmeter and install additional ground rods and conductors as required until resistance to interconnected ground system is 5 ohms or less. Measure ground resistance in normally dry conditions and not less than 48 hours after rainfall.

PART 3. EXECUTION

3.01 INSTALLATION

A. Grounding Conductors.

1. Install grounding conductors so not exposed to physical damage. Install connections firm and tight. Arrange conductors and connectors so no strain on connections.

2. Run grounding conductors associated with direct burial cables in common trenches above or if indicated beside cables.

3. Bury equipment grounding conductors 18-in. deep. Bring loops or taps up for connection to equipment or other items to be grounded.

4. Where raceways are used to contain and protect grounding conductors, install in accordance with Electrical Raceway Systems Section.

5. Where bare grounding conductors are contained within metallic raceways, bond ends of raceways to conductors by suitable fittings.

6. Install loop type, low impedance, grounding system interconnecting all components so at least two grounding connections are provided for each major item of electrical equipment. Ensure that severing of any single grounding conductor in this system does not remove grounding protection on any major item.

7. Connect structural steel at locations indicated by an external perimeter loop of grounding conductor installed around all sides of building foundation, buried at least 18-in. (450 mm) below grade, and connect to each vertical column by loop or tap. Connect two opposite points on external loop to two different points on grounding system.

8. Perform exothermic welding with properly sized molds in good condition.

B. Ground Rods.

1. Install ground rods in manholes in accordance with requirements specified under the section Underground Distribution Systems. Connect each grounding conductor entering a manhole to ground rod.

2. Install ground rods where indicated. Install the top of the rod 12-in. below the ground surface. Measure ground resistance of electric power service ground rod and if it is not 25 ohms or less, drive additional rods to obtain resistance of 25 ohms or less.

3. Make connection to overall grounding system as indicated.

4. Ensure that final resistance of interconnected ground system is 5 ohms, or less. Measure ground resistance in normally dry conditions and not less than 48 hours after rainfall.

C. Equipment Grounding.

1. Ground each piece of electrical equipment by means of a grounding conductor installed in raceway feeding that piece of equipment with copper wire sized in accordance with National Electric Code. Grounding conductors installed in conduit furnished with green, 600-volt insulation.

2. Connect transformer cases and neutrals to grounding system. Connect neutral ground connection at transformer terminal. Provide two separate, independent, diagonally opposite, connections for power transformers so removal of one connection will not impair continuity of other.

3. Connect two separate ground connections from ground grid to ground bus of switchgear assemblies, motor control centers and all outdoors substation equipment. Ensure that each connection for item of equipment is from different section of ground grid.

4. Install a separate grounding conductor from ground system to motors, in addition to raceway system. Ground motor ground connection to motor frame, independent of mounting bolts or sliding base. Ground motor to nearest point on grounding system, unless otherwise indicated.

5. Connect lightning arresters to ground system by suitable conductors.

6. Connect emergency generator neutral to grounding system by a grounding conductor of size required by National Electrical Code, unless a larger size is indicated. Connect grounding conductor to generator disconnect enclosure and generator neutral on generator side of disconnect. Ground generator frame with two separate independent connections, so removal of one connection will not impair continuity of other.

7. Ground each street lighting standard by ground rod driven near base of standard, in accordance with requirements of National Electric Safety Code. Connect ground rods to grounding conductor brought with street lighting feeder cable.

8. Ground transformers, lightning arresters, insulators etc., installed on poles, poles and timber structures, or metal structure. Run grounding conductors between poles or structure and ground rods. Protect grounding conductor by molding applied for at least 8 ft. above ground, with both molding and conductor stapled. Install ground rod where indicated and driven until top of rod is 1 ft. below ground. Measure ground resistance of rod and if not 25 ohms or less drive additional rods to obtain resistance of 25 ohms or less.

9. Where lightning arresters are furnished with electrical equipment and grounding connections are not inherently provided, ensure that suitable separate grounding conductor connects lightning arresters with system ground.

10. Ground wire fences when used to enclose electrical equipment. Unless otherwise indicated, provide minimal grounding by buried, outside peripheral ground loop; connections to each corner fence post and nearby ground rod; flexible connections to each gate; and at least two connections to grounding system from approximately opposite positions on fence.

11. Also connect the ground rods to the grounding conductor run with the direct burial cable.

SECTION 160810
ELECTRIC FIELD ACCEPTANCE TESTS

PART 1. GENERAL

1.01 SUMMARY

1.01.1 DESCRIPTION

A. After electrical installation is complete, make tests to demonstrate that entire system is in proper working order and in accordance with the Construction Drawings and specifications. Make no tests less than those outlined hereafter, unless requested in writing and approved by Engineer. Tests are in addition to, and no substitution for, tests of individual items at manufacturer's plant. Make insulation and ground resistance test before operating tests. Determine proper rotation of motors before permanent connections are made.

B. Pay all costs for tests including expenses incident to retest occasioned by defects and failures of equipment to meet specifications.

1. Replace wiring and equipment found defective, or failing to meet specified requirements, without charge, unless written acceptance for repair is given by Engineer.

2. Furnish three copies of all test results to Engineer.

3. Supply electric current necessary for tests.

1.02 REFERENCE

A. NEMA. National Electrical Manufacturers Association, 2101 L Street, Northwest, Washington D.C.

B. IEEE. Institute of Electrical and Electronic Engineers, 345 East 47th Street, New York, NY.

PART 2. PRODUCTS

2.01 TESTING EQUIPMENT

A. Calibration.

1. Furnish suitable electrical instruments including voltmeters, ammeters, wattmeters, tachometers and all other equipment necessary to perform tests specified. Furnish certified copies of calibration curves of these instruments, which have been calibrated for specific tests.

2. Make necessary openings in circuits for testing instruments and place and connect all instruments, equipment, and devices, necessary for the tests. Upon completion of tests, remove instruments and instrument connections and restore all circuits to permanent condition.

3. Other Sections of specifications require services of one or more manufacturer's representatives, to ensure that equipment supplied has been installed properly and adjusted to proper working order.

Advise representative of all applicable tests in this Section, so that work will be coordinated, and tests combined where feasible.

2.02 TESTING

A. Coordination.

1. Coordinate activities, and cooperate with others on project, to ensure that systems are energized when required, loads applied, and other requirements of Section are carried out on timely, coordinated basis.

2. Conduct tests in presence of Engineer. Notify Engineer seven calendar days or more in advance when any test to be performed, and do not start tests without Engineer's permission.

B. Preparation.

1. Make up no high and/or medium-voltage connections at service entrance, transformers, substations, motors, medium voltage motor control centers, generator permanently until correct phase rotation of all equipment is determined. Install and insulate these connections temporarily, if necessary, while determining proper rotation. Make permanent connections after proper rotation has been established and subsequent to completion of insulation resistance and dielectric tests.

PART 3. EXECUTION

A. After electrical installation is complete, make tests to demonstrate that entire system is in proper working order and in accordance with the Construction Drawings and specifications. Make no tests less than those outlined hereafter, unless requested in writing and approved by Engineer. Tests are in addition to, and no substitution for, tests of individual items at manufacturer's plant. Make insulation and ground resistance test before operating tests. Determine proper rotation of motors before permanent connections are made.

B. Pay all costs for tests including expenses incident to retest occasioned by defects and failures of equipment to meet specifications.

1. Replace wiring and equipment found defective, or failing to meet specified requirements, without charge, unless written acceptance for repair is given by Engineer.

2. Furnish three copies of all test results to Engineer.

3. Supply electric current necessary for tests.

C. Insulation Resistance Tests of Cirits, 600 Volts and below.

1. Do not subject conductors rated 600 volts and below to high potential dielectric tests. Test each complete feeder and branch circuit of 600 volts or below with everything but power supply and power-consuming equipment, connected thereto, and have an insulation resistance between

conductors and between each conductor and ground of not less than 1,000,000 ohms, unless otherwise accepted by Engineer.

2. Determine insulation resistance values with all switchboards, panelboards, fuseholders, switches, receptacles, and overcurrent devices in place.

3. Use megohmmeter having output of at least 500 volts to determine insulation resistance value for 600 volt rated conductors and a 2400-volt megohmmeter for 5 kV and 15 kV rated conductors.

4. List each circuit and measured resistance as test data.

5. Maintain record of all insulation resistance values. Identify conductor, or equipment, date that value was taken and resistance value. Arrange information in suitable neat tabular form and turn to Engineer in triplicate.

D. INSULATION RESISTANCE TESTS FOR MOTORS

1. After installation, test windings of all 3-phase motors with megohmmeter in accordance with, and meeting requirements of, IEEE Standard No. 43.

E. GROUND RESISTANCE

1. Test each ground rod in accordance with IEEE Std. 142, and submit tabulation of results to Engineer. Include identification of electrode, date of reading and ground resistance value in results.

2. Test each entire grounding system for continuity of connections and for resistance. Ensure that ground resistance of conduits, equipment cases, and supporting frames does not vary appreciably from that of system as whole and does not exceed 5 Ohms.

F. OPERATING TESTS

1. Operate each motor and associated equipment, as nearly as possible, under normal operating conditions for as long as feasible and for length of time sufficient to demonstrate correct alignment, temperature rise, speed, and satisfactory operation. Load motors to full capacity or as near as possible.

2. Operate switches, circuit breakers and control devices to show correct and satisfactory operation.

3. Associated equipment includes instruments, meters, relays, circuit breakers, switches, and other devices in substations, switchgear, motor control centers, panelboards, control and instrumentation panels, etc., related to motor being tested.

4. Where tests of any of above-referenced equipment included in other Sections of specifications, coordinate testing, as directed by Engineer, to avoid duplication and conflict between tests.

5. Perform above tests in addition to, and not in substitution for required manufacturer's factory tests of individual items.

SECTION 160910
DEMOLITION OF EXISTING ELECTRICAL EQUIPMENT

PART 1. GENERAL

1.01 SUMMARY

1.01.1 SECTION INCLUDES

Furnish labor to disconnect and remove existing electrical material and equipment in the existing plant.

1.02 REFERENCE

A. NEMA. National Electrical Manufacturers Association, L Street Northwest, Washington, D.C.

B. Westinghouse Electrical Maintenance Hints Forbes Road, Tonfford, PA.

C. NEC. National Electrical Code, National Fire Protection Association NFPA-70 Batterymarch Park, Quincy, MA.

D. UL. Underwriters' Laboratories, Inc., Pfingsten Road Northbrook, IL.

E. OSHA. Occupational Safety & Health Administration North St. Boston, MA.

PART 2. PRODUCTS

2.01 REMOVAL OF EXISTING MATERIAL AND EQUIPMENT

A. Carefully dismantle electrical equipment, conduits, cables, wiring, etc. as necessary to carry out proposed changes.

B. Develop a schedule for necessary outages with ENGINEER to that equipment essential to the plant operation can be maintained.

C. Insure that all hardware items are on hand before attempting any demolition.

D. Provide any temporary connections that may be required for plant operations.

2.02 DISPOSAL OF EXISTING MATERIAL AND EQUIPMENT

A. Remove debris from site.

B. Dispose of and remove from site material and equipment not Indicated for reuse.

C. Deliver material and equipment indicated for reuse to owner.

PART 3. EXECUTION

"NOT APPLICABLE"

SECTION 161210
ELECTRIC WIRES AND CABLES

PART 1. GENERAL

1.01 SUMMARY

1.01.1 SECTION INCLUDES

Furnish and install all wires and cables necessary for complete electrical systems, as indicated in Construction Drawings and as specified.

1.02 REFERENCE

A. ASTM. American Society for Testing and Materials, 1916 Face Street, Philadelphia, PA 19103, U.S.A.

1. B 3: Soft or Annealed Copper Wire.

2. B 8: Concentric-Lay-Stranded Copper Conductors, Hard, Medium-Hard, or Soft.

3. B 33: Tinned Soft or Annealed Copper Wire for Electrical Purposes.

B. NEC. National Electrical Code: National Fire Protection Association, 470 Atlantic Avenue, Boston, MA.

C. U.L. Underwriters Laboratories, Inc., 333 Pfingston Road, Northbrook, IL.

1. U.L. 44: Wires and Cables Rubber Insulated.

2. U.L. 83: Wires Thermopla8tic-Insulated.

3. U.L. 854: Cables, Service Entrance.

D. NEMA. National Electrical Mfg'8 Association, 2101 L Street, NW Washington, D.C. 20037.

1. WC 3: Rubber Insulated Wire & Cable.

2. WC 5: Thermoplastic Insulated Wire & Cable.

3. WC 7: Cross-Linked-Thermosetting Polyethylene-Insulated Wire & Cable.

4. Rome Cable Company - control cable, 600 V, Type B, size 12, 7 strand.

E. Cable fireproofing tape.

1. MAC Products, Inc., 60 Pennsylvania Avenue, Kearny, NJ.

2. Or Approved equal.

PART 2. PRODUCTS

2.01 MATERIALS

A. Furnish copper conductors. Material and stranding of conductors: Conforms to ASTM B 33-80 ASTM B3-80, and to ASTM B 8-77, for the appropriate class. No. 12 Awg minimum wire size unless otherwise noted.

B. Tinned wire used with natural rubber insulation. Conforms to ASTM B 33. Uncoated, soft or annealed copper wire conforming to ASTM B3.

C. 15 kV / 5 kV cables. Single-conductor, shielded, grounded cross-linked polyethylene insulated, 90 degrees C, copper conductors. The outer Jacket: polyvinyl chloride.

D. Wires and cables for maximum 600-volt power circuits. Type THHN with cross-linked polyethylene insulation, except from substation to metering panel that it shall be XLPE.

E. Wires and cables for lighting and other 120/240-volt and 120/208-volt circuits. Type THHN-75C.

F. Wires and cables for control, indicating, metering, or alarm circuits. Single and multi-conductor control cable, copper conductors, Class B or C stranding. Insulation, 600-volt polyethylene, polyvinyl chloride, or E.P.R.

PART 3. EXECUTION

3.01 INSTALLATION

A. General.

1. Install wiring in accordance with applicable provisions of National Electrical Code, and as indicated.

2. Wire and cable sizes are indicated however, in no case use smaller cable sizes than required by the National Electrical Code.

3. Unless otherwise indicated, use no conductor smaller than No. 12 AWG.

4. Conductors for branch lighting circuits: Install conductors of sizes that greatest voltage drop between lighting panel and center of load will not exceed 2 percent at rated load.

5. Number and sizes of wires and conduits indicated is guide only and are not necessarily correct number and sizes necessary for actual equipment installed. Install as many wires and conduits as required and necessary for complete electrical system, and provide adequately for the equipment actually installed.

6. Install conductors continuous from outlet to outlet and make no splices except within outlet or Junction boxes.

7. Draw all conductors contained within single conduit at same time.

8. Apply wire-pulling compound if required to conductors being drawn through conduits. Use pulling compound, Minerallac No. 100, Y-er-Eas, Yellow 77 or acceptable equivalent.

9. Use no cable bend with radius of less than eight times its diameter.

10. Wires and cables installed without prior submittal review and Engineer's approval are subject to removal at no additional expense to Owner.

11. Support cables in riser conduits at intervals as required by National Electrical Code.

B. 15 Kv and 5 Kv Cable Splicing and Terminations.

1. Use experienced cable splicers in manholes. Use materials and procedures recommended by cable manufacturer.

2. Use primary 15 kV / 5 kV cable terminations with rating of 15,000-volts / 5,000 volt. Ensure that standard withstand conforms to IEEE Std. 48 and is in compliance with specification Section 160810, Electric Field Acceptance Tests. Use potheads, elbow connectors, clamp type connectors or termination as recommended by equipment manufacturer.

3. Ensure that all-splicing and terminating of 15 kV and 5 kV cable is in accordance with designs, materials, and instructions set forth by cable manufacturer.

4. Wrap cables in manholes with fireproof tape, which meets ASTM D 626. Install tape in accordance with manufacturer's instructions.

C. Conductor Identification.

1. Label each wire at both termination points. Carry individual conductor or circuit identification throughout, with circuit numbers or other identification clearly stamped on terminal boards and printed on directory cards in distribution cabinets and panel boards.

2. Identify each wire in Junction boxes, cabinets, and terminal boxes where total number of control, indicating, and metering wires is three or more and no terminal board is provided, including all power wire by means of plastic-coated, self-adhesive, wire marker.

3. In cases similar to above where terminal boards are provided for the control, indicating, and metering wires ' identify all wires including motor leads and other power wires too large for connection to terminal boards, by wire markers as specified above.

4. In manholes, identify each wire by laminated plastic tag located so easily seen.

D. Connectors, Terminal Lugs and Boards.

1. For wiring of circuits consisting of No. 10 or No. 12 AWG solid wires, such as for lighting branch circuits, utilize self-insulated pressure type connectors for all splices or joints.

2. Terminate all wires connected to terminal boards, terminal blocks, or to other similar terminals by means of ring and tongue, nylon self-insulated, tin-plated copper pressure terminals.

3. Fabricated terminal boards, installed where indicated, of type 600 volts, 30 amperes, screw terminals, with white marking strips for wire identification, of the 4-, 6-, 8-, or 12-pole type, as necessary.

4. Clearly and permanently mark terminal strips with ink or indelible pencil. Mark each wire consistently throughout entire system, using notation of wires given on manufacturer's wiring diagrams wherever possible.

SECTION 161310
ELECTRICAL RACEWAY SYSTEMS

PART 1. GENERAL

1.01 SUMMARY

1.01.1 SECTION INCLUDES

Furnish and install complete raceway systems, with all accessories, fittings, boxes, etc., as indicated and specified.

1.02 REFERENCES

A. Puerto Rico Power Electric Authority regulations.

B. National Fire Protection Association (NFPA).

1. National Electrical Code (NEC).

C. Underwriter's Laboratories, Inc. (UL).

1. U.L.-1: Electrical Flexible Metal Conduit.

2. U.L.-6: Rigid Metal Electrical Conduit.

3. U.L.-360: Electrical Liquid-Tight Flexible Steel.

4. U.L.-651: Schedule 40 and 80 PVC Conduit.

5. U.L.-886: Electrical Outlet Boxes and Fittings for Use in Hazardous Locations, Class 1, Groups A, B, C, and D and Class 11, Groups E, F, and G.

6. U.L.-1242: Intermediate Metal Conduit.

D. National Electrical Manufacturers Association (NEMA).

1. TC-2 Electrical Plastic Tubing (EPT) and Conduit (EPC-40 and EPC-80).

1.03 SUBMITTALS

1.03.1 SHOP DRAWINGS

A. Submit shop drawings and manufacturers' product data in accordance with requirements of section 013340 and with General and Supplementary Conditions.

B. Record Drawings. Include the actual routing of exposed and concealed conduit runs on record drawings.

PART 2. PRODUCTS

2.01 MANUFACTURERS

A. Manufacturer's Compliance.

1. Manufacturer's acceptance contingent upon products compliance with specifications.

2. Polyvinyl chloride-coated rigid steel conduit:

a) Triangle Conduit & Cable Company, New Brunswick, NJ.

b) Republic Steel Corporation, Cleveland, OH.

c) Robroy Industries Verona, PA.

d) Or approved equal.

3. Polyvinyl chloride (PVC) Conduit:

a) Triangle Conduit & Cable Company, Inc., New Brunswick, NJ.

b) Republic Steel Corp., Cleveland, OH.

c) Carlon Electrical Sciences, Inc., Cleveland, OH.

d) Or approved equal.

4. Flexible Conduit:

a) American Flexible Conduit Company, New Bedford, MA.

b) Anaconda Metal Hose, Waterbury, CT.

c) International Metal Hose Company, Bellevue, OH.

5. Boxes and Fittings:

a) O.Z./Gedney Company, Terryville, CT.

b) Crouse-Hinds Electrical Construction Materials, Syracuse, NY.

c) Appleton Electric Company, Chicago, IL.

d) Or approved equal.

6. Fiberglass-Reinforced Polyester Boxes:

a) Crouse-Hinds Electrical Construction Materials, Syracuse, NY.

b) Hoffman Engineering Company, Anoka, MN.

c) Or approved equal.

7. Rigid Steel Conduit, Elbows and Couplings:

a) Triangle PWC Incorporated.

b) Republic Steel Corporation.

c) Or approved equal.

2.02 MATERIALS AND COMPONENTS

A. Flexible-Metal Conduit.

1. Provide flexible-metal conduit for use in dry areas and match fittings, size, and material to rigid conduit to which it is connected. Flexible-metal conduit conforming to U.L.-I.

2. Provide liquid-tight flexible-metal conduit for use in damp and corrosive areas consisting of flexible metal conduit, with liquid-tight, sunlight-resistant Jacket extruded over the conduit. On 1-1/4-in. and larger conduits, furnish separate external ground wire. Liquid-Tight flexible-metal conduit conforming to U.L.-360.

B. Polyvinyl chloride (PVC) Conduit.

1. Provide PVC conduit, Schedule 40 conforming to industry NEMA Standard TC-2 and UL-651.

C. Polyvinyl chloride-Coated Rigid Steel Conduit.

1. Provide Coated-coated (PVC-Coated), rigid steel conduit consisting of hot-dipped galvanized rigid steel conduit, as specified herein before, with a Polyvinyl chloride Jacket not less than 40 mils thick, bonded to the conduit. The adhesive strength of the bonding to equal or exceed tensile strength of the coating. Provide couplings and fittings for this conduit with an integral, bonded, overlapping pressure-sealing sleeve of the same insulation thickness. Extend sleeves one pipe diameter or 2-in. (whichever is less) beyond the end of the coupling so sleeve of coupling makes a watertight fit with the plastic Jacket on the conduit when coupled together.

D. Rigid Steel Conduit.

1. Provide rigid, heavy wall, mild steel, hot dip galvanized, smooth interior, tapered threads and carefully reamed ends; ¾-inch NPS minimum size.

2. Threads.

a) Apply conductive compound to all joints before assembly.

b) Make up joints tight and ground thoroughly.

c) Conduit and fitting threads to be standard tapered pipe threads. Standard straight thread conduit couplings permitted only on exposed indoor conduit runs. Running threads not permitted.

d) Use strap wrenches and vises to install conduit. Conduit with wrench marks to be replaced. N.

E. Boxes.

1. Provide standard, sheet metal, outlet and Junction boxes constructed of code-gauge, galvanized sheet steel. Size each box as required by the NEC.

2. Provide boxes containing fixture studs for hanging fixtures. Use concrete-tight boxes for installation in concrete. Do not use shallow boxes unless building construction is such that it is impossible to use standard-depth boxes.

3. Provide outlet boxes and fittings for hazardous locations conforming to U.L.-886 for class, group, and division indicated.

4. Provide boxes and covers for Coated-coated steel conduit made of galvanized cast iron, with a Polyvinyl chloride factory-applied coating over the galvanizing. Provide coating thickness of 40-mil minimum. Boxes to have hubs with extruded sleeves extending beyond the hub in the same manner as specified for conduit couplings. Provide cover screws of stainless steel.

5. Provide cast boxes with covers or device plates suitable for the area classification. Use cover screws of stainless steel or high brass for iron boxes.

6. Provide Polyvinyl chloride boxes for use as junction boxes and provide high impact strength fiberglass-reinforced polyester boxes for use as device boxes, pull boxes, and terminal boxes for use with Polyvinyl chloride conduit. Size each box as required by the National Electrical Code.

7. Provide pull boxes used below motor control centers and large pull boxes (10 inches by 10 inches by 6 inches deep and larger) hung from ceilings constructed of angle or channel frames, and sheet metal with welded Joints. All welds to be ground smooth. Provide neoprene gaskets for complete sealing. Sectionalize covers longer than 40-in. to facilitate handling and gasket-sectionalized covers where covers meet, using angle iron or channel cross members at the Joint. Sheet metal to be not less than No. 12 gage galvanized sheet steel. Make interior angles and supports of galvanized steel, or carbon steel with a corro8ion-resistant phosphate coating and primer. Provide each box with a grounding lug for connection to the nearest ground bus. Current capacity of ground lug at least that required by the National Electrical Code for the largest feeder entering the equipment.

F. Fittings.

1. Provide cast-iron fittings of malleable iron or a mixture of gray iron and cast steel.

2. Provide suitable expansion fittings where conduits cross expansion Joints. Equip these fittings with grounding straps, clamps, and copper bonding jumpers.

PART 3. EXECUTION

3.01 GENERAL

A. Perform all work in accordance with the National Electric Code.

B. Use no conduit less than 3/4 inches in diameter, unless otherwise indicated.

3.02 INSTALLATION

A. All raceway runs are shown diagrammatically to outline general routing of raceway. Avoid interfering with pipes, ducts, structural members, or other equipment. Deviations in accordance with Engineer, after acceptance, are without additional compensation.

B. Furnish and install all exposed conduits in Rigid Galvanized PVC coated and encased conduits in PVC.

C. Fittings.

1. Install expansion fittings wherever conduits cross structural expansion joints. Keep the fittings in line with conduit, and install with regard to temperature so that full working range of expansion is available.

2. Do not install fittings to replace elbows and pull boxes, unless space or other problems make use of fittings necessary. Use oversize fittings whenever large cable is installed, in order to maintain proper bending radius.

3. Terminate ends of all floor conduits installed for future use with couplings and readily removable plugs set flush with finished floor surface. Caps spare wall conduits at wall where they enter building. .

4. Equip ends of all conduits with suitable conduit fittings. Fit conduits terminating at motor control center or power distribution equipment, or in box above or below, with grounding type bushings, or solidly ground by lock nuts or other acceptable fittings. Connect each grounding bushing to ground bus by a bare or green-covered copper wire. Do not use ground wire smaller than 12 awg. Install ground wire larger than 12 gauge when required by NEC. Where conduits terminate in unprotected areas or where bonding is required over expansion joint, flexible conduit or equivalent; use ground wires No. 6 Awg. copper or larger.

5. Terminate conduits entering gasketed sheet-metal boxes or gasketed sheet-metal equipment enclosures with gasketed hubs.

6. Terminate conduits entering non-gasketed sheet-metal boxes or enclosures with double lock nuts and insulated bushings, or with acceptable equivalent.

D. Raceways.

1. Install exposed raceways parallel or at right angles to walls and ceiling beams. Make all changes in directions with approved bends, elbows, and pull boxes. Space parallel runs uniformly throughout. Secure in place by approved hangers and approved fasteners. Effectively ground raceways by connection to properly grounded enclosures, bonding, or other approved means, to obtain permanent low resistance path to ground throughout installation. Ensure that raceway sections in single run and in parallel runs are of same type and finish.

2. Support raceways concealed above suspended ceilings from slab above ceiling in same manner as exposed raceways. Do not support raceways from ceiling supports.

3. Provide cast-in-place inserts in concrete to support all runs, unless otherwise permitted. Use stainless steel sleeve type concrete anchors for installing boxes, conduit supports, etc. Provide stainless steel nut, bolts, washers, etc. for use with concrete anchors.

4. Provide bolts or machine screws on steelwork. Support conduits by hangers or pipe straps spaced according to NEC, but in no case more than 10 feet on centers.

5. Provide galvanized supports for galvanized conduit.

6. Install conduits in slabs as close to middle of concrete slabs as practicable without disturbing reinforcement. Do not use conduit with outside diameter exceeding one-third of slab thickness. Do not place conduits closer than three diameters on centers, except at cabinet locations where slab thickness is increased as permitted by Engineer.

7. Where conduits are concealed in bottom floor slab, place in concrete slab and not in fill below slab.

8. Provide sleeves passing through exterior walls and slabs, which are wall entrance seals of watertight construction. For new construction furnish watertight seal between slab and sleeve, and between sleeve and conduit or cable similar to O.Z./Gedney Type "FSK". For existing construction furnish watertight seal for Use in core bit drilled holes that provides seal between concrete and conduit or cable similar to O.Z./Gedney Type "CSHI". Use wall-entrance seals or malleable iron with watertight sealing gland, which may be tightened any time after installation.

9. Do not use dissimilar metals in conjunction with each other. Use suitable insulation between adjoining surfaces so as to eliminate direct contract and any resultant electrolysis. Maintain electrical continuity of system. Use bituminous impregnated felt, heavy bituminous coatings, nonmetallic separators or washers, or other acceptable materials as insulation.

10. Install fittings to match raceway were being used.

11. Where conduits pass through firewalls, grout hole around the conduit to the full depth of the material penetrated.

12. Provide separate raceways for all low voltage instrumentation raceways (50 volts and below) from control and power raceways.

E. Bends.

1. Make all bends carefully to prevent distortion of circular cross section. Field bend conduit to have an inside radius of not less than nine diameters.

2. Where bends of less than nine diameters are necessary, uses standard factory elbows. Size conduit to permit cable-bending radius within the factory elbow of at least eight times cable diameter.

3. Use concentric bends in parallel runs. Allow no conduit to have more than two 90-degree bends or equivalent thereof between pulling points.

F. Cutting, Threading and Connecting.

1. Make all field cuts in conduits squarely, file cut ends, ream to remove rough edges and thread in accordance with NEC. No running thread permitted. Make all connections mechanically strong and tight, and with acceptable connectors. Where conduit surface coating is damaged or removed in the cutting, threading or reaming process restore the surface to the original condition.

G. Conduit Cleaning.

1. Clean all conduit carefully before and after installation, ream ends free of burrs, and free inside surfaces from all imperfections likely to injure cable.

2. After installation of each complete new conduit run, snake the run with band to which is attached a tube cleaner with cylindrical mandrel of a diameter not less than 85 percent of nominal diameter of conduit. Remove and replace all conduit through which mandrel will not pass.

3. Use a sponge with steel brush to clean steel conduit and use a sponge with nylon brush to clean PVC conduits.

4. After cleaning, protect ends of all conduit with standard caps to prevent entrance of water, concrete, debris, or other foreign substance.

H. Conduit Drainage.

1. Where practicable, pitch conduit to drain to outlet boxes, or install so as to avoid trapping moisture. Where dips are unavoidable in exposed conduits, install fitting with suitable drain hole at low point.

I. Boxes.

1. Install sheet metal boxes only in dry, accessible location. Install cast metal boxes (unless otherwise indicated) in outside concrete or masonry walls, in floor slabs, in basements and all other below grade locations. Cast metal boxes must be used (unless otherwise indicated) where vapor-tight fixtures are required, for all surface mounting of wall switches and receptacles and for all outdoor use. Install pull boxes for motor control centers and large ceiling hung boxes where indicated.

2. Install boxes in conformity with all requirements of NEC. Install boxes designed for type of construction involved. Support boxes in same manner as required for conduit. Size boxes to provide bending radius for wire or cable of at least eight times diameter or in accordance with NEC, whichever is larger.

3. Center all outlets in panels, or spaces and adjust to structural finish. Where specific locations are not indicated, locate outlets with respect to equipment served.

4. Place all outlet boxes, junction boxes, pull boxes, etc., in accessible locations when they are installed above or behind plastered ceilings, furred spaces, or suspended ceilings. Install access panels of suitable size. Mark all access panels for all boxes so panels can be readily located in future. Mark, using metal tabs or plastic buttons, which cannot mark ceilings or walls, appropriate for type of construction being used.

5. Assemble cast-metal boxes with threaded conduit hubs in such manner that conduit connections and gasketed covers are watertight. Close all unused threaded openings with pipe plugs and compound.

6. Provide cast boxes with covers and device plates suitable for the area classification. Install screws of stainless steel or high brass for iron boxes.

J. Flexible Connections to Motors and Equipment.

1. At all motors and electrically operated equipment to which conduit connections are made, install with a complete connection between end of conduit and terminal box of motor or other equipment.

2. Install the conduits in locations permitting direct connection to motors.

3. Make connections between rigid raceway and motor or equipment subject to vibration and adjustment using flexible conduit. Make each connection with at least one-quarter bend so that no vibration can be transmitted beyond flexible connection.

4. Install flexible metal conduit, fittings, and accessories in dry areas in accordance with requirements of NEC.

5. Install liquid-tight flexible metal conduit in damp and corrosive areas. Locate conduit to reduce the possibility of damage to the exterior coating. Use fittings that screw into flexible conduit and provide gaskets where required.

K. Hazardous Areas.

1. Install all conduits, fittings, equipment and devices within areas to comply with requirements of NEC for Hazardous Locations, Class, Division, and Group as indicated in the Construction Drawings.

2. In such hazardous locations, seal conduits terminating at boxes enclosing circuit-opening equipment at entrance to enclosure with approved, compound-filled, commercial, sealing fittings to prevent passage of explosive or combustible gases through conduits.

3. Seal all conduit leading from or entering such

4. Hazardous locations at points of exit or entrance.

5. Install conduit connections with at least five threads tightly engaged, and made up with suitable thread compound.

6. Where drain/seal fittings are required, they shall be of malleable iron construction with an internal drainage path, which provides a visual means to ensure that the compound chamber is properly filled. The installation should enable the drain/breather fitting and filler plug to be installed right after the compound is poured.

7. All exposed pipe in sewage water treament plants and pump stations shall be rigid pvc coated. All screws, cramps and other items used in holding the pipe shall be made of staineless steel.

SECTION 161312
CONDUIT

PART 1. GENERAL

1.01 SUMMARY

1.01.1 SECTION INCLUDES

A. This section includes providing all labor, materials, equipment and incidentals as shown, specified and required to furnish and install conduit and fittings to form complete, coordinated and grounded raceway systems.

1.02 REFERENCES

A. Reference Standards: Comply with applicable provisions and recommendations of the following except where otherwise shown or specified:

1. NEC Article 346, Rigid Metal Conduit.

2. NEC Article 347, Rigid Nonmetallic Conduit.

3. UL Standard No. 6, Rigid Metal Electrical Conduit.

4. UL Standard No. 514, Electrical Outlet Boxes and Fittings.

5. UL Standard No. 651, Schedule 40 and 80 PVC Conduit.

6. UL Standard 1242, Intermediate Metallic Conduit.

7. ANSI C80.1, Specification for Zinc Coated Rigid Steel Conduit.

8. ANSI C80.4, Specification for Fittings for Rigid Metal Conduit and Electrical Metallic Tubing.

9. NEMA TC2, Electrical Plastic Tubing, Conduit and Fittings.

10. NEMA TC3, PVC Fittings for Use with Rigid PVC Conduit and Tubing.

1.03 SUBMITTALS

1.03.1 SHOP DRAWINGS

A. Submit for approval the following:

1. Manufacturers catalog literature, specifications and technical data for the conduit and fittings proposed for each use.

B. Record Drawings. Include the actual routing of exposed and concealed conduit runs on record drawings.

PART 2. PRODUCTS

2.01 MANUFACTURERS

A. Rigid Steel Conduit, Elbows and Couplings:

1. Manufacturers: Provide products of one of the following:

a) Triangle PWC Incorporated.

b) Republic Steel Corporation.

c) Or equal.

B. PVC Coated Rigid Steel Conduit, Elbows and Couplings:

1. Manufacturers: Provide products of one of the following:

a) Robroy Industries.

b) Republic Steel Corporation.

c) Or equal.

C. Intermediate Metallic Conduit, Elbows and Couplings:

1. Manufacturers: Provide products of one of the following:

a) Allied Tube and Conduit Corporation.

b) Or equal.

D. Conduit Fittings and outlet Bodies:

1. Manufacturers: Provide products of one of the following:

a) Crouse-Hinds Company.

b) Appleton Electric Company.

c) Or-equal.

E. Plastic Conduit:

1. Products and Manufacturers: Provide one of the following:

a) "Type 40-Heavy Wall Rigid PV-Duit" by Carlon, Division of Indian Head, Incorporated.

b) Amoco Chemicals Corporation.

c) Or equal.

2.02 MATERIALS

A. Rigid Steel Conduit, Elbows and Couplings:

1. Material: Rigid, heavy wall, mild steel, hot dip galvanized, smooth interior, tapered threads and carefully reamed ends; ¾-inch NPS minimum size.

B. PVC Coated Rigid Steel Conduit, Elbows and Couplings:

1. Material: Rigid, heavy wall, mild steel, hot dip galvanized inside and out, smooth interior, tapered threads, carefully reamed ends, ¾-inch NPS minimum size with a factory coating of 40 mil thick polyvinyl chloride.

2. Color: Color of coating shall be the same on all conduit and fittings.

C. Intermediate Metallic Conduit, Elbows and Couplings:

1. Material: Rigid-type steel, work-hardened, hot-dip galvanized, smooth interior, tapered threads and carefully reamed ends, ¾-inch UPS minimum size.

2. Couplings: Same as for rigid steel conduit.

3. Elbows: Factory formed of same material specification as for intermediate metallic conduit.

D. Conduit Fittings and outlet Bodies:

1. Material and Construction: Cast gray iron alloy or cast malleable iron bodies and covers. Outdoor units to be gasketed and watertight. Gaskets to be of an approved type designed for the purpose. Improvised gaskets not acceptable. All units to be threaded type with five full threads. Material to conform to ANSI C80.4 and be listed by UL. Fittings and bodies in or on PVC coated conduit runs to have a factory-applied coating of 40-mil thick polyvinyl chloride.

E. Plastic Conduit:

1. Material: Schedule 40 PVC plastic; NFMA Type EPC-40-PVC, 90°C rated, conforming to UL 651.

PART 3. EXECUTION

A. The Contractor shall provide all labor, materials, equipment and incidentals as shown, specified and required to furnish and install conduit and fittings to form complete, coordinated and grounded raceway systems.

B. Coordination. Conduit runs shown are diagrammatic.

1. Coordinate conduit installation with piping, ductwork, lighting fixtures and other systems and equipment and locate so as to avoid interference.

3.02 INSTALLATION

A. Install in conformance with National Electrical Code requirements.

B. Type of counduit

1. Rigid steel or intermediate metallic conduit for concrete embedded conduit runs.

2. PVC coated rigid steel steel or rigid galvanized steel for exposed indoor and exterior conduit runs in water purification projects. For water treatment plants or water treatment pumping station projects, use only PVD Coated Rigid Galvanized steel for exposed indoor or exterior conduit runs.

3. Schedule 40 PVC for concrete encased duct bank runs.

C. Dissimilar Metals:

1. Take every action to prevent the occurrence of electrolytic action between dissimilar metals.

2. Do not use copper products in connection with aluminum work, and do not use aluminum in locations subject to drainage of copper compounds on the bare aluminum.

3. Back paint aluminum in contact with masonry or concrete with two coats of aluminum-pigmented bituminous paint.

D. Supports:

1. Rigidly support conduits by clamps, hangers or Unistrut channels.

2. Perforated hanger straps or welding conduits to structural steel not permitted.

3. Use cadmium plated bolts for conduit fastening.

E. Fastenings: Fasten raceway systems rigidly and neatly to supporting structures by the following methods:

1. To Wood: Wood screws.

2. To Hollow Masonry Units: Toggle bolts.

3. To Brick Masonry: Price expansion bolts, or equal.

4. To Concrete: Phillips; Hilti Corp.; or equal, anchors.

5. To Steel: Welded threaded studs, beam clamps or bolts with lockwashers or locknuts.

F. Plug or cap conduit ends at the time of installation to prevent the entrance of moisture and foreign materials.

G. Empty Conduits:

1. Install nylon pull wire in each empty conduit and cap conduits not terminating in boxes with permanent fittings designed for the purpose.

2. Identify each empty conduit with a durable tag showing the conduit number indicated in the Construction Drawings, and the two points of connections.

H. Conduit Embedded in Concrete:

1. Separation: Three times outer diameter of larger conduit center to center, or, as indicated on Construction Drawings.

2. Minimum Slab Thickness:

a) With no crisscrossing of conduit, three times outer diameter of conduit.

b) With crisscrossing of conduits, four times outer diameter of larger conduit.

3. Run conduit in center of slab.

I. Make underground and embedded conduit joints watertight to prevent ground water from entering buildings.

J. Orientation:

1. Install parallel or perpendicular to structural members or walls, unless concealed.

2. Wherever possible, run in groups.

3. Install on structural members in protected locations.

4. Locate clear of interference.

5. Locations in the Construction Drawings are approximate.

K. Clearance: Maintain, 6 inches from hot water lines and ¼ inch from walls.

L. End Cuts: Square and ream to prevent damage to wire and cable.

M. Field Bends: No indentations. Diameter of conduit shall not vary more than 15 percent at any bend.

N. Threads:

1. Apply conductive compound to all joints before assembly.

2. Make up joints tight and ground thoroughly.

3. Conduit and fitting threads to be standard tapered pipe threads. Standard straight thread conduit couplings permitted only on exposed indoor conduit runs. Running threads not permitted.

4. Use strap wrenches and vises to install conduit. Conduit with wrench marks to be replaced. N.

O. Insulated Bushings:

1. Install on conduits entering boxes or cabinets, except threaded hub types.

2. Provide locknuts on both inside and outside of enclosure for grounding.

3. Bushings not to be used in lieu of locknuts.

P. Vertical Drops:

1. Rigidly support from equipment or building.

2. Unsecured drop length not to exceed 8 feet.

3. Install vertical runs plumb. No diagonal runs.

Q. Thruwall Seals: Install for conduits passing through exterior subsurface walls or base slabs of buildings.

R. Drainage:

1. Pay particular attention to drainage for conduit runs.

2. Wherever possible, install conduit runs so as to drain to one end and away from buildings.

3. Take extreme care to avoid pockets or depressions in conduit.

S. Conduit Curb:

1. In concrete slabs or floors, provide a four inch high curb extending four inches from the outer surface of the conduit penetrating the floor, to prevent corrosion.

2. Terminate conduit stub-ups in couplings, slightly above the finished concrete curb.

3. Paint the stub-up with Scotch-Clad Protective Coating #1706 or equal, a minimum of 6 inches above and below the finished surface of the concrete.

T. For individual exposed conduits passing through walls, install non-metallic sleeves to protect the conduit against action of alkaline substances which may be present.

U. Before concrete is placed, make the necessary location measurements of the conduit to be embedded so that the information is available to prepare record drawings.

V. PVC Coating: Field apply a 40 mil thick polyvinyl chloride coating to supports and fasteners for PVC coated conduit runs.

SECTION 161315
FLEXIBLE CONDUITS

PART 1. GENERAL

1.01 SUMMARY

1.01.1 SECTION INCLUDES

This section includes furnishing and installing flexible metallic conduits.

1.02 SUBMITTALS

1.02.1 SHOP DRAWINGS

A. Submit for approval the following:

1. Manufacturer's catalog literature, specifications and technical data for flexible conduit and fittings proposed for use.

1.03 QUALITY ASSURANCE

A. Reference Standards.

Comply with applicable provisions and recommendations of the following except where otherwise shown or specified.

1. 1. NEC Article 351, Liquid-Tight Flexible Metal Conduit.

2. 2. UL Standard No. 360, Liquid-Tight Flexible Steel Conduit.

PART 2. PRODUCTS

2.01 MATERIALS

A. Flexible Conduit.

1. Material: Flexible galvanized steel core with smooth, abrasion resistant, liquid-tight, polyvinyl chloride cover. Continuous copper ground built in for sizes ¾" through 1 ¼" inch. Material shall be UL listed.

2. Products and Manufacturers: Provide one of the following:

a) Sealtite UA by Anaconda Metal Hose Division, Anaconda American Brass Company.

b) Liquatite Type L.A. by Electric-Flex Company.

c) or equal.

B. Flexible Conduit Fittings.

1. Material and Construction: malleable iron with cadmium finish. Fittings shall adapt the conduit to standard threaded connections, shall have an inside diameter not less than that of the corresponding standard conduit size and shall be UL listed.

2. Manufacturers: Provide products of one of the following

a) Crouse-Hinds Company.

b) Appleton Electric Company.

c) or equal.

PART 3. EXECUTION

Contractor shall provide all labor, materials, equipment and incidentals as shown, specified and required to furnish and install flexible metallic conduit.

3.01 INSTALLATION

A. Install at motors and or motor operated valves and equipment which are subject to vibration or require movement for maintenance purposes.

B. Install in conformance with Puerto Rico Electric Power Authority and the National Electrical Code requirements.

SECTION 161317
UNDERGROUND DUCT BANKS

PART 1. GENERAL

1.01 SUMMARY

1.01.1 SECTION INCLUDES

This section includes providing all labor, materials, equipment and incidentals as shown, specified and required to furnish and install underground duct banks.

1.02 SUBMITTALS

1.02.1 SHOP DRAWINGS

A. Submit for approval the following:

1. Manufacturer's literature, specifications and technical data for nonmetallic conduit and fittings proposed for use.

2. Ductbank construction details.

1.03 QUALITY ASSURANCE

1.03.1 REGULATORY REQUIREMENTS

A. Reference Standards: Comply with applicable provisions and recommendations of the following except where otherwise shown or specified.

1. National Electrical Code.

2. UL. Standard No. 651, Schedule 40 and 80 PVC Conduit.

3. NERA TC2 Electrical, Plastic Tubing, Conduit and Fittings.

4. NEMA TC3, PVC Fittings for Use with Rigid PVC Conduit and Tubing.

5. Puerto Rico Electric Power Authority Regulations

PART 2. PRODUCTS

2.01 MANUFACTURERS

A. Plastic Duct:

1. Product and Manufacturer: Provide material manufactured by one of the following:

a) Carlon, Division of Indian Head, Incorporated.

b) Amoco Chemicals Corporation.

c) Or equal.

2.02 MATERIALS

A. Plastic Duct:

1. Material: Schedule 40 PVC plastic, NEMA Type EPC-40-PVC, 90°C rated, conforming to UL 651.

PART 3. EXECUTION

A. Contractor shall provide all labor, materials, equipment and incidentals as shown, specified and required to furnish and install underground duct banks.

B. Coordination. Duct bank routing on the Contract Drawings is diagrammatic. Coordinate installation with piping and other underground systems and structures and locate clear of interference.

C. Use ducts and conduit for underground duct banks, which are suitable for concrete encasement.

D. Make duct bank installations and penetrations through foundation walls watertight.

E. Assemble duct banks using non-magnetic saddles, spacers and separators. Position separators to provide 0.08 meter minimum concrete separation between the outer surfaces of the ducts.

F. Provide a 0.08 meter minimum concrete covering on both sides, top and bottom of ducts and concrete filler between ducts. Add red dye to concrete used for envelopes or trowel a coloring on the concrete for easy identification during subsequent excavation.

G. Firmly fix ducts in place during pouring of concrete. Carefully spade and vibrate the concrete to insure filling of all spaces between ducts.

H. Make bends with sweeps of not less than 1.08 meter radius or 5 degree angle couplings.

I. Make a transition from non-metallic duct to rigid steel conduit 2.7 meters from where duct banks enter structures, other than manholes or turn upward for continuation above grade. Continue ducts inside buildings with rigid steel conduit; use PVC coated conduits when exposed.

J. Reinforce duct banks under roadways and in areas subject to soil settlement. Unless otherwise noted in the Construction Drawings, reinforce with No. 4 longitudinal steel bars placed at each corner and along each face at a maximum parallel spacing of 0.46 meters on centers, and No.3 tie-bars transversely placed at 0.46 meter maximum longitudinal intervals. Maintain a maximum clearance of 2.5 centimeters from bars to the edge of the concrete encasement. In no case shall reinforcing steel be installed between ducts in the duct bank.

K. Where ducts enter structures such as handholes, manholes, pullboxes, transformer and switchgear compartments, or buildings, terminate the ducts in suitable end bells, insulated bushings or couplings on steel conduits.

L. Do not backfill with material containing large rock, paving materials, cinders, large or sharply angular substances, corrosive material or other materials which can damage or contribute to corrosion of ducts or cables or prevent adequate compaction of fill.

M. Slope duct runs for drainage toward manholes and away from buildings.

N. Install a bare stranded #4/0 copper duct bank ground in each duct bank envelope. Make ground electrically continuous throughout the entire duct bank system and connect to switchgear and to steel conduit extensions of the underground duct system.

O. After completion of the duct bank and prior to pulling cable, pull a mandrel, not less than 0.3 meters long and with a cross section approximately 0.6 centimeters less than the inside cross section of the duct, through each duct. Then pull a rag swab or sponge through to make certain that no particles of earth, sand or gravel have been left in the duct.

P. Install a warning ribbon approximately 0.61 meters below finished grade over all underground duct banks carrying cables of 480 volts and higher. The identifying ribbon shall be a polyvinyl chloride tape, 7.6 centimeters wide, yellow color, permanently imprinted with "DANGER HIGH VOLTAGE CABLE" or "PELIGRO LINEAS ELECTRICAS DEBAJO" in black letters.

Q. Record Drawings: Include the actual routing of underground duct runs on record drawings "As-Built Drawings". Include a description of the primary and secondary manholes of the underground system.

SECTION 161320
OUTLET BOXES

PART 1. GENERAL

1.01 SUMMARY

1.01.1 SECTION INCLUDES

Furnish and install outlet boxes as indicated and specified.

1.02 REFERENCES

A. UL. Underwriters' Laboratories, Inc., 333 Pfingster, Road, Northbook, IL.

B. NEC. National Electrical Code, 1978 Edition, U.S. Department of Commerce, Superintendent of Documents, U. S. Government Printing Office, Washington, DC.

PART 2. PRODUCTS

2.01 MATERIALS

A. Boxes. Hot dip galvanized, 1.25 ounces per square foot (381 gram per square meter) or cadmium plated, conform to UL requirements.

B. Interior Boxes. Pressed sheet steel, blanked for conduit. Furnish attached lugs for locating.

C. Ceiling. 4 inches octagonal boxes for receiving three or less 1/2-inch conduits.

1. For Flush Mounting in Walls: Boxes with matching plaster cover for single or two gang outlets. For larger boxes use solid type or special units. In masonry use deep boxes.

D. Surface Mounted. 4 inches square.

PART 3. EXECUTION

3.01 INSTALLATION

A. Unless indicated otherwise, mount outlet boxes flush in areas other than mechanical rooms, electrical rooms, and above removable ceilings.

B. Adjust position of outlets in finished masonry walls to suit masonry course lines.

C. Do not install boxes back-to-back in same wall. Coordinate cutting of masonry walls to achieve neat openings for boxes. Use rotary cutting equipment to cut masonry work for installation of electrical fittings.

D. Locate boxes in masonry walls so that only a corner need be cut from concrete masonry units.

E. Do not use sectional or handy boxes unless specifically requested.

F. For boxes mounted in exterior walls, install insulation behind outlet boxes to prevent condensation in boxes.

G. Use type “FS” boxes when mounted on the wall.

H. For outlets mounted above counters, benches and splash backs, coordinate location and mounting heights with built-in units. Adjust outlet-mounting height to agree with required location for equipment served.

I. Install all boxes in conformity with all requirements of National Electric Code.

J. Center all outlets in panels or spaces provided therefore, and adjust to the structural finish. Where specific locations are not indicated, locate outlets with respect to the equipment served, and with approval of the Engineer.

K. Place all outlet boxes in accessible locations when they are installed above or behind plastered ceilings, furred spaces, or suspended ceilings. Install access's panels of suitable size, as approved by the Engineer. Mark all access panels for all boxes so they can be readily located in the future. Markings-may be in the form of metal tabs or plastic buttons which cannot mar ceilings or walls, appropriate for the type of construction being used.

L. Provide separate boxes for flush or recessed fixture-when required by the fixture terminal operating temperature. Install readily removable fixtures.

M. Support boxes for surface mounted fixtures on suspended ceilings independently of the ceiling support.

N. In open overhead spaces, cast metal boxes threaded to raceways need not be separately supported, except where used for fixture support. Support metal boxes, having thread less connectors, and sheet metal boxes directly from the building structure, or by bar hangers. Where bar hangers are used, attach bar to raceway on opposite side of the box, and support the raceway with an approved type fastener not more than 24 inches (600 mm) from the box. Avoid cutting any main reinforcing steel for penetration of more than 1-1/8 inch (38 mm) into reinforced-concrete beams or more than 3/4 inch (19 mm) into reinforced concrete joints.

SECTION 161330
PULL AND JUNCTION BOXES

PART 1. GENERAL

1.01 SUMMARY

1.01.1 SECTION INCLUDES

This section includes furnish and install pull and junction boxes as shown in the Construction Drawings or as specified.

1.02 SUBMITTALS

1.02.1 SHOP DRAWINGS

A. Submit for approval the following:

1. Manufacturer's literature, specifications and technical data for all pull and junction boxes proposed to use.

1.03 QUALITY ASSURANCE

1.03.1 REGULATORY REQUIREMENTS

A. Reference Standards.

Comply with applicable provisions and recommendations of the following except where otherwise shown or specified:

1. NEC Article 370, Outlet, Switch and Junction Boxes, and Fittings.

2. UL Standard No. 50, Electrical Cabinets and Boxes.

3. Puerto Rico Electrical Power Authority regulations.

4. National Electrical Code, latest edition.

PART 2. PRODUCTS

2.01 MATERIALS

A. Junction and Pull Boxes.

1. Material and Construction:

a) Cast gray iron alloy or cast malleable iron bodies and covers. Cadmium finish.

b) Neoprene gaskets. Gaskets to be of an approved type designed for the purpose. Improvised gaskets not acceptable.

c) Stainless steel cover screws.

d) External mounting lugs.

e) Drilled and tapped conduit holes.

f) Boxes where conduits enter a building below grade shall have ¼" drain hole.

g) Manufacturers: Provide products of one of the following:

1) Crouse-Hinds Company.

2) Appleton Electric Company.

3) or equal.

B. Boxes for damp, wet or corrosive locations shall meet NEMA 4X requirements and may be non-metallic thermoplastic "Circuit Safe" enclosures by Carlon, An Indian Head Company, fiberglass-reinforced polyester "Krydon" enclosures by Crouse Hinds Company or equal.

PART 3. EXECUTION

3.01 INSTALLATION

A. Contractor shall provide all labor, materials, equipment and incidentals as shown, specified and required to furnish and install pull and junction boxes.

B. Mount boxes so that sufficient access and working space is provided.

C. Securely fasten boxes to walls or other structural surfaces on which they are mounted. Provide independent. galvanized steel supports where no walls or other structural surface exists.

D. Install pull boxes in runs containing more than three 90 degree bends, runs exceeding 200 feet, as indicated in the Construction Drawings and in conformance with the National Electrical Code.

E. Size junction and pull boxes in accordance with the requirements of the National Electrical Code.

F. Provide terminal blocks in junction boxes where 120 volt power and control cable connections are required.

SECTION 161410
WIRING DEVICES

PART 1. GENERAL

1.01 SUMMARY

1.01.1 SECTION INCLUDES

Furnish, install, field test, and place in operating condition, wiring devices as indicated and as specified.

1.02 REFERENCES

A. National Electrical Manufacturers Association (NEMA).

1. National Electrical Code (NEC).

B. Federal Specifications.

1. W-S-896-F (1P-2P-3W): Switch, Toggle, Single Unit with wall plates.

2. W-C-596-F: Plug, Electrical Connector, Receptacle, Electrical.

C. Underwriters' Laboratories, Inc. (UL):

1. UL-20: General Use Snap Switches.

D. National Fire Protection Association (NFPA):

1. National Electrical Code (NEC).

1.03 SUBMITTALS

A. Submit shop drawings and manufacturer's product data in accordance with requirements of Section 013340 and with General and Supplementary Conditions.

PART 2. PRODUCTS

2.01 MANUFACTURERS

A. Manufacturer's Compliance.

1. Manufacturers acceptance contingent upon products compliance with specifications.

2. Provide all devices with U.L. label.

B. Manufacturers.

1. Arrow-Hart, Inc., Florence, KY.

2. Allen-Bradley Co., Milwaukee, WI.

3. Appleton Electric Co., Chicago, IL.

4. Bryant Electric, Div. of Westinghouse, Bridgeport, CT.

5. Cutler Hammer, Inc., Milwaukee, WI.

6. Crouse-Hinds Co., Syracuse, NY.

7. Harvey Hubbell, Inc., Bridgeport, CT.

8. Pass & Seymore, Inc., Syracuse, NY.

9. Or approved equal.

2.02 MATERIALS AND COMPONENTS

A. Wall Switches.

1. Provide alternating current, general-use, snap switches, in flush device boxes or on outlet box covers, totally enclosed in composition case, with insulated mounting yoke and side wired, binding screw-type terminals. Single-pole, 2-pole, 3-way, or 4-way switches rated 20 amperes at 120/277 volts a.c. Switch to meet Fed. Spec. W-S-896-F and UL-20.

2. Switches for controlling lighting:

   a) Arrow-Hart Cat. No. 1991, 1992, 1993 or 1994.

   b) Harvey Hubbell Cat. No. 1221, 1222, 1223 or 1224.

   c) Bryant Electric Cat. No. 4901, 4902, 4903 or 4904.

   d) Pass & Seymore, Cat. No. 20AC1, 20AC2, 20AC3 or 20AC4.

   e) Or approved equal.

B. Flush Receptacles.

1. Provide 20-ampere, 125-volt flush receptacles constructed in flush device, boxes, and of grounding type in composition case with insulated mounting yoke, side-wired, binding screw-type terminals.

2. Receptacles to meet Fed. Spec. WC596-F.

3. Duplex receptacles:

a) Arrow-Hart Cat. No. 5342.

b) Harvey Hubbell Cat. No. 5362.

c) Bryant Electric Cat. No. 5362.

d) Pass & Seymore Cat, No. 5342.

e) Or approved equal.

C. Outlet Boxes and Enclosures.

1. Provide outlet boxes and enclosures conforming to section titled "Outlet Boxes", to schedule in the Construction Drawings and to Engineer specifications.

D. Device Plates.

1. Provide device plates suitable for type of outlet boxes and enclosures used. Plates for flush mounting by device manufacturer. Plates for surface-mounting boxes by either device manufacturer or box manufacturer.

2. Provide flush device plates of high corrosion resistant, Type 302 stainless steel.

3. Provide flush device plates of material and finish indicated, in certain designated areas.

PART 3. EXECUTION

3.01 GENERAL

A. Perform all work in accordance with the National Electrical Code (NEC).

3.02 INSTALLATION

A. Connection.

1. Securely and rigidly attach wiring devices in accordance with regulating agency, and as indicated, avoiding interference with other equipment.

2. Securely fasten nameplates using screws, bolts, or rivets and centered under or on the device, unless otherwise indicated.

B. Grounding

1. Ground all devices in accordance with NEC.

2. Ground switches and their metal plates through switch mounting yoke, outlet box, and raceway system.

3. Ground flush receptacles and their metal plates through positive ground connection to outlet box and grounding system. Maintain ground to each receptacle by spring loaded grounding contact to mounting screw, or by grounding jumper, both making positive connection to outlet box and grounding system at all times.

SECTION 161420
RECEPTACLES

PART 1. GENERAL

1.01 SUMMARY

1.01.1 SECTION INCLUDES

This section includes providing all labor, materials, equipment and incidentals as shown, specified and required to furnish and install convenience receptacles.

1.02 SUBMITTALS

1.02.1 SHOP DRAWINGS

A. Submit for approval the following:

1. Manufacturer's literature, specifications and technical data for receptacles proposed for use.

1.03 REFERENCES

A. Reference Standards: Comply with applicable provisions and recommendations of the following except where otherwise shown or specified:

1. National Electrical Code.

2. UL Standard #1010, electrical receptacle-plug combinations for use in hazardous locations.

3. Puerto Rico Electric Power Authority regulations

PART 2. PRODUCTS

2.01 MANUFACTURERS

A. Provide one of the following:

1. Series CPS by Crouse-Hinds Company.

2. Type CPS by Appleton Electric Company.

3. Or equal.

2.02 MATERIALS

A. Non-Hazardous Locations

1. Duplex grounding receptacle, two pole, three wire, 125 volt AC, 20 amperes.

2. Single grounding receptacle, corrosion resistant, two poles, three wires, 125 volt AC, and 20ampere.

B. Hazardous Locations:

1. Material: Factory sealed receptacle suitable for installation in Class I, Group D hazardous locations. Copper-free aluminum receptacle and cover with cast gray iron alloy or cast malleable iron-mounting box with zinc electroplate finish. Receptacle rated at 20 amperes, 125-250 volt AC, 2 wire, and three pole.

C. Welding Receptacles:

1. Single grounding type, heavy duty, power receptacle and plug, 3 pole, 3 wire, 600 volt, 60 ampere delayed action -circuit breaking receptacle in cast metal housing with cast back box, angle adapter and spring door.

PART 3. EXECUTION

3.01 INSTALLATION

A. Contractor shall provide all labor, materials, equipment and incidentals as shown, specified and required to furnish and install convenience receptacles.

B. In non-hazardous locations, install wiring devices in outlet or device boxes.

C. In hazardous locations, install receptacles in steel rigid galvanized metallic conduit systems.

D. Install receptacles with ground pole in the down position.

E. Mount convenience receptacles 0.46 meters above finished floor in non-hazardous, locations and 1.22 meters above finished floor in hazardous locations unless otherwise noted.

F. Install in conformance with National Electrical Code.

SECTION 162210
ELECTRIC MOTORS

PART 1. GENERAL

1.01 SUMMARY

1.01.1 SECTION INCLUDES

This section includes specifications for all electric motors.

1.02 SUBMITTALS

1.02.1 PRODUCT DATA

A. For motors one horsepower or larger, motor Test Data sheets shall be submitting showing:

1. Nameplate data
2. Winding resistance
3. Torque
4. Efficiencies
5. Power factor
6. Slip
7. Full load current draw
8. Locked motor current draw
9. Running light current draw
10. Rotor voltage for wound rotor units
11. Nameplate temperature
12. Results of dielectric test

PART 2. PRODUCTS

2.01 MATERIALS

A. Motors. Electric motors shall be high efficiency and shall comply with the following:

1. Shall operate the driven equipment under all conditions of operation without exceeding nameplate current or power, or without exceeding the service factor rating.

2. Shall conform to current NEMA, IEEE, and ANSI standards. Motors shall be horizontal or vertical, squirrel cage induction motors as required, with normal starting and slip torque. Motors shall be suitable for continuous duty on 230/460 volt, 3 phase, 60 cycle alternating current, except where otherwise noted.

3. Motors shall be furnished by the manufacturer of the specific equipment.

4. Motors service factors shall be 1.15 unless otherwise noted.

5. Shall cumply with EPAC requirements.

6. Shall carry full load current continuously without injurious temperature rise in the ambient temperature of 40'C.

7. Shall be energy efficient type with following characteristics. High grade electrical steel, longer core, thinner laminations, improved fan design, more copper in windings, increased conductor cross section and larger rotor bars and rings.

8. Minimum full load efficiencies shall be not less than the following:

EFFICIENCIES (NOMINAL)			
Synchronous Speed Horsepower Motor Rating	1200	1800	3600
1	78.5	81.5	--
1.5	84.0	84.0	82.5
2	86.5	84.0	84.0
3	88.5	88.5	86.5
5	88.5	88.5	87.5
7.5	89.5	90.2	88.5
10	90.2	90.2	89.5
15	90.2	91.7	90.2
20	91.7	91.7	91.0
25	91.7	92.4	91.0
30	92.4	93.0	91.7
40	93.0	93.0	91.7
50	93.0	94.1	91.7
60	93.0	94.1	93.6
75	94.1	94.1	94.1
100	94.1	95.0	94.1
125	94.1	95.0	94.1
150	95.0	95.8	94.1
200	95.0	95.8	95.0
250	--	95.8	95.0

Horsepower shall be as specified.

9. Motor frames and Shields shall be cast iron or fabricated steel. Motors larger than 10 HP shall be provided with lifting lugs or eyes. Windings shall be random or form wound, adequately insulated and braced to resist failure due to electrical stress and vibration. Rotors shall be steel laminations, adequately fastened together and to the shaft. Rotor squirrel cage windings may be cast aluminum or bar type with brazed end rings.

10. Bearings. Shall be rated not less than B-10 based on a minimum bearing life of 20,000 hours as defined by the Anti-Friction Bearing Manufacturers Association.

11. Thrust bearings. Shall be grease-lubricated ball or roller bearings. Radial bearings shall be grease-lubricated ball bearings. Guide bearings shall be grease lubricated. Standards grease fittings and grease outlets shall be provided. Bearings shall be double shielded.

12. Terminal boxes. Shall be sized to permit wire making and housing all connections. Flexible terminal leads shall extend six inches beyond the face of the terminal box and shall be fitted with solder-less lugs.

13. Motor insulation shall be non-hygroscopic, Class F with Class B rise to provide extra margin of thermal life protection from moisture, vapors, thermal and electrical shock.

0ne complete set of removable bearings for each size and type of motor shall be provided.

14. Motor hardware shall be zinc plated, and housing shall be epoxy enamel painted at factory

SECTION 162211
ELECTRIC MOTORS II

PART 1. GENERAL

1.01 SUMMARY

1.01.1 SECTION INCLUDES

This specification includes requirements for the design, manufacture, and testing of all electric induction motors to be furnished under other sections of these specifications.

1.02 REFERENCES

A. Reference Standards. Electric motor manufacturer and material shall be in accordance with NEMA Standard MG – 1, USASI Standards and IEEE Standard as applicable and to the requirements specified herein.

1.03 SUBMITTALS

A. Submittal data. Submittal of motor data for acceptance shall include complete nameplates data in accordance with the NEMA standards cited above as applicable. The following additional data shall be submitted for Type 1 motors:

1. Service factor

2. Efficiency at ½, ¾, and 1 nameplate horsepower (Minimum full load efficiency shall be 88%)

3. Power factor at ½, ¾ and 1 nameplate horsepower

4. Temperature rise at service factor horsepower

5. Motor outline, dimensions and weight

6. Describe bulleting including description of the insulation system

PART 2. PRODUCTS

A. Detalied Requirements

1. Type. Unless otherwise specified, motors are three phase squirrel cage, NEMA Design B on NEMA frame sizes 143 T and larger: or single phase Type on NEMA frames 56 and smaller motors for reciprocating pumps and compressors shall be NEMA design C. Hoist motors shall be NEMA Design D.

2. Rating. Each motor shall develop ample torque for its required service throughout its acceleration range at any voltage within 10 percent of the nameplate rating. Motors driving centrifugal pumps or fans shall be non-overloading throughout the extend of the pressure capacity curve at the driver's maximum output speed.

Unless otherwise specified all motors shall be rated for continuous operation and all rating shall be based upon operation in a 40 degree C ambient temperature at sea level maximum temperature rise shall be 60 degree C.

3. **Application Types.** Motors are identified as follows:

   a) Type 1. Process motors

   b) Type 2. Non process motors

   These two types are further classified by enclosure as follows:

   A. Totally enclosed fan cooled severe duty

   All motors installed exposed to weather conditions shall be totally enclosed fan cooled severe duty.

   B. Explosion proof

   C. Submersible

   Totally enclosed motors shall be provided with drilled and tapped holes to drain all cavities within the motors. Motors with frame 286T or smaller shall have corrosion resistant plugs in the drain holes. Motors with frame 3254T or larger shall be provided with automatic breather – drain devices.

   Explosion proof motors shall be UL listed for class 1, Division 1, group D hazardous locations and shall be provided with breather-drains listed for the hazardous location.

4. **Nameplates.** Motors nameplates for type motor shall be stainless steel, nameplates for Type 2 motors shall be of a n on corrosive metal that is not discolored by hydrogen sulfide. Nameplates shall be engraved or sample and shall be fastened t the motor frame with screws or drive pins of the same material. Nameplates shall indicate clearly all the items of information enumerated in NEMA standard MG 1 10.3B or MG 1 20 – 60 as applicable.

   The contractor shall coordinate the motor nameplate location so it readily visible for inspection on the completed machine.

5. **Thermal Protection.** Where thermal protection is specified for motors, such protection on integral horsepower frame motors shall be provided by positive temperature coefficient thermistors (PTC) embedded in the windings. Complete data on the thermistors, device, and recommended relay make and model number shall be furnished with the submittal data. A thermostatic device shall provide thermal protection on fractional horsepower motors with contacts suitable interrupting line current.

6. **Insulation Check.** The engineer may test insulation resistance of the motor at any time after delivery of the motor to the job site or at any time during the warranty period. Test for acceptability will be made using a 1000-volt Megohm meter (megger). Interpretations of the test

results for minimum acceptable value of insulation resistance will be made in accordance with IEEE no 43. Correct all defieciencies.

7. **Load test.** The engineer may test a motor at any time after delivery to the job site or at any time during the warranty period to determine its ability to meet service factor loading conditions within the temperature limits of the manufacturers submittal data. In the event that a motor does not meet the load test requirements the Contractor shall replace the motor.

8. **Over Frequency Operation.** All motors shall be able to drive their loads for a period of 90 seconds without damage to the motors when the power supply frequency is 110% of the specified frequency.

9. **Safe stall time.** All motors shall have a safety stall (locked rotor) time equal to or greater than the maximum accelerating time under the worst voltage conditions specified.

10. **Vibration.** Limits for motor vibration shall be 0.005 inch in the bearing housing and 0.010 inch on the shaft, double amplitude.

11. **Finish and paint.** Finish and paint shall be of the rust inhibiting type and otherwise in accordance with the manufacturer's standard practice.

12. **Motor Manufacturers.** Contractor shall furnish motors manufactured by Allischalmers electric machinery manufacturing company. Louis Allis Company, Westinghouse electric corporation, Reliance Electric Company, Marathon electric, U.S. Electrical Motors or as otherwise approved by Engineer.

B. Three phase motors frames 143 through 445T

1. **General.** Type 1 three phases motors, shall be provided with a NEMA frame 143T or larger, Type 2 three phase motor frames shall be selected by the motor manufacturer. All motors ½ horse power and larger shall be three phase unless otherwise specified. Type 1A three – phase motors shall encapsulated windings. If the insulation encapsulation cannot be provided for the required frame size Type 1B motors may be substituted. Type 1B three phase motors shall have additional drips and bakes to withstand contaminated atmospheres. Conductors shall be copper.

   Three-phase motors shall be designed and connection for operation on a 460 volt, 60 Hz alternating current electrical system, unless otherwise specified. All motors 1 Hp or larger shall be equipped with 115-volt space heaters. The heater leads shall be brought to the conduit box, heater shall be serves through a 1P-20A breaker at the service panel and protected with a fuse at each starter with a capacity of 125% of the heater load.

2. **Rating.** The maximum output shaft horsepower under any condition of loading shall not exceed 85 percent of the motors service factor horsepower rating unless specifically accepted by the engineer. No use of the service factor shall be made in the design of the motor.

3. **Enclosures.** Three – phase motor enclosures shall be as specified under the individual equipment specifications.

4. **Insulation.** Three phase motor insulation system shall be the manufacturer's premium grade and resistant to attack by moisture, acids, alkalies, and mechanical or thermal shock. Motor insulation for loads shall be sealed with non-wicking, non-hygros, copic insulating material. Type 1 three phase motors shall be NEMA class B or class F with class B temperature rise under the rated conditions.

5. **Construction.** Three phase motors shall have a cast iron frame and cast iron conduit box. The conduit box shall be split from top to bottom and shall be capable of being rotated to four positions. Synthetic rubber like gaskets shall be installed between the frame and conduit box and its cover. A grounding lug shall be provided inside the conduit box.

   Three – phase motors weighing more than 50 pounds shall be equipped with at least one lifting lug. All hardware shall be corrosion – resistance. Motors shall be delivered with the manufacturer's standard primer.

6. **Bearing.** Three –phase motor bearing shall be conservatively designed to withstand all stresses of the service specified. Anti friction motor bearing shall have a minimum design rating life of 15 years in accordance with ANSI standards. Shall be designed to be regresable and initially shall be filled with grease suitable for ambient temperature to 40 degrees Celsius. Corrosion – resistant pipe plugs shall be furnished for grease inlet and outlets. Grease inlet and outlet plugs shall be accessible without the necessity of dismantling any part of the motor. Motors shall be mounted on the equipment to allow convenient access to the pipe plugs.

C. Testing

1. **Shop test.** Motors shall be given standard routine tests in accordance with IEEE standard 112A and NEMA standard MG – 1. The engineer shall be notified well in advance of the time for tests so that he may be present during tests if he so elects.

   Five (5) certified reports covering all tests performed shall be provided to Engineer for information.

PART 3. EXECUTION

A. Contractor shall design, manufacture and test all electric motors to be furnished under other sections of the specifications. Contractor shall provide drawings, schedule, procedures, test reports and other documents herein specified.

B. Coordination and work specified elsewhere. The contractor shall coordinate the work specified in this section with that in other sections of this specification in order that all necessary items shall be provided as required for satisfactory operation and that the various items of equipment will properly fit and operate in the spaces allotted to them.

1. Foundations and anchor bolts installed in place.

2. External wiring to motors and associate auxiliary devices.

3. Installation and field testing of motors.

SECTION 162220
DIESEL-ENGINE GENERATING SET AND APPURTENANCES

PART 1. GENERAL

1.01 SUMMARY

1.01.1 SECTION INCLUDES

A. Under this Section, the Contractor shall furnish, deliver, haul, store, protect, assemble, erect, install, adjust, paint, test, place in satisfactory operation and guarantee the diesel-engine generating set and appurtenances required for stand-by electric power, complete in every detail, leave ready for operation as shown on the drawings or as indicated and specified.

B. WARRANTY

The diesel-engine generating set and appurtenances shall be warranted for a period of two (2) years, from the date of project final acceptance.

C. MAINTENANCE SERVICE

1. Furnish service and maintenance of generator system for one year from the date of project final acceptance.

2. Protect all equipment placed into storage from weather, humidity and temperature variations, dirt, dust, and other contaminants.

3. Ensure that equipment manufacturer has local branch office staff with trained, full-time employees who are capable of performing tests, inspecting, repair, and maintenance services.

1.02 REFERENCES

A. Code of Federal Regulations 40CFR112.

B. "Guías para la preparación del Plan de Emergencias Contra Derrames", Junta de Calidad Ambiental.

C. Reglamento para el Control de la Contaminación Atmosférica (RCCA) de la Junta de Calidad Ambiental de Puerto Rico.

1.03 SUBMITTAL

A. Drawings and Descriptions to be Furnished by the Contractor. Contractor shall submit drawings and descriptions, clearly illustrating the construction and describing the equipment and materials which the Contractor will furnish under this Section. Data shall include speed, characteristics and efficiency of the unit under full and part loads. Before starting construction, the Contractor shall submit detail drawings in sextuplicate of all equipment for approval by the Engineer.

B. Submit drawings and description of all dikes, channel and secondary tanks.

1.04 QUALITY ASSURANCE

A. Experience of Manufacturer. The engine, alternator and exciter shall be of a proven type, size and design of recognized manufacturer. The Contractor shall submit evidence of successful use of similar equipment including location. capacity, type and date of installations.

PART 2. PRODUCTS AND EXECUTION

A. General

1. General Design. All equipment furnished shall be of modern design and construction in every detail. All parts shall be of rugged construction, of ample strength and size for all stresses that may occur during fabrication, transportation and erection and during continuous operation. They shall be designed to perform the work required of them easily without injury or undue strain to any part. Structural steel shall be of ample strength to support the loads coming upon it without noticeable deflection and shall be properly cambered where necessary.

The engine shall be rated in accordance with the DEMA temperature of one hundred and ten (110°) degrees Fahrenheit (43.3°C) at an altitude not over five hundred (500') feet (152 m) and at a barometric pressure or not less than twenty-eight and twenty-five hundredths (28.25") inches (717.6 mm) of mercury.

The diesel engine shall be furnished with all the necessary auxiliary instrumentation and controls. The diesel engine shall be capable of cold starting from the heat of compression without the use of starting aids such as glow plugs.

2. Critical Speed and Noise. The design of the generating set consisting of engine, alternator and exciter shall be such that the operation of the system shall be free from all serious torsional, lateral, longitudinal and other forms of vibration at engine speeds within plus or minus ten (+ 10%) percent of synchronous speed.

3. Arrangement. The engine, alternator and exciter shall be properly aligned on a common steel base designed to maintain the alignment of the engine and alternator. The steel base shall be furnished with steel spring vibration isolators as manufactured by Korfund Dynamics Corporation; Consolidated Kinetics Corp. or approved equal. The method of installation of the isolators shall be in accordance with the recommendations of the manufacturer of the isolators furnished and approved by the Engineer. The alternator shall be direct connected with an approved coupling to the diesel-engine.

4. Capacity and Rating. The engine generator set shall be rated as follows:

Kilowatts, at 0.8 Power Factor (Min. Continuous)		IN Kw
	(Min. Standby)	IN Kw
Kilovolt-amperes	(Min. Continuous)	IN Kva
	(Min. Standby)	IN Kva
Voltage		IN Volts
Phases		3Ø, 4 wires

Cycles		60 Hz
Speed	Max.	1800 RPM
Cooling	Unit Mounted Radiator	
Rating in Kw as indicated on drawings. The minimum size shall be 25 KW.		

The manufacturer of the generating set shall submit certified copies of test result certifying the rating voltage and frequency regulation of the generating set.

The engine shall be V-type. The engine shall be the standard product of the manufacturer, complete with all devices normally furnished and carry other devices required herein. The engine-driven pumps and devices shall be suited for an have the capacity required to function properly with associated, but separately mounted, equipment. The engine shall be of modern design with a rotative speed not exceeding one thousand eight hundred (1,800) revolutions per minute.

When the load to be connected to the generator is small causing the running KW to be under 30% of the rated KW the unit shall be provided with a load bank.

Generators for pump stations shall be able to provide all the load required for the pump station.

5. Shop Testing. The engine shall be tested in accordance with the DEMA Standards. The equipment shall be given the standard commercial and other tests as may be required to show that they comply with the requirements of the specifications and meet the guaranteed efficiencies. Alternator efficiencies are to be determined in accordance with the methods by the Institute of PI Electrical and Electronic Engineers.

These tests shall be conducted at the plant of the manufacturer. The contractor shall furnish six (6) copies of certified test results to the Engineer for approval.

6. Field Testing. After the engine generating set and accessories have been completely installed and connected up, the equipment shall be operated by the Contractor under the supervision of the expert furnished by the Contractor. The equipment shall be operated for such period as may be necessary to demonstrate the ability of the of the machinery, equipment, auxiliaries and accessories to operate properly, smoothly and efficiently, without undue noise or vibration to the satisfaction for the Engineer. Any adjustments that are deemed necessary to place the equipment in first-class operating condition shall be made at this time.

In addition to NEMA, ANSI and IEEE standards the following field tests shall be performed and certified:

a) Static tests of all controls and protectic circuits

b) Not less than 10 cold starts.

c) Not less than 4 hours of transient response tests using plant loads

d) Not less than 5 simulated power outages to determine the adequacy of the automatic starting and loading controls. These tests shall be conducted by inducing an actual power outage in the plant power supply. The tests shall include simulated single phasing of each powerleg.

e) Not less than 8 hours continuous operation of which 2 hours shall be at full load.

If any fault or defect is found during the test the Contractor shall make all adjustments, repairs and replacements and do whatever else is necessary to remedy the faults or defects and shall retest the equipment to the satisfaction of the Engineer. All costs of adjustments, repairs, replacements and retesting shall be at the Contractor's expense.

Fuel required for testing will be furnished by the Contractor. Once the installation of the emergency energy generator and the system start up have been completed, and it is working, ready to begin operation and accepted by PRASA, the contractor shall fill at full capacity all fuel storage tanks of the system.

7. **Operating Conditions.** The engine generating set and auxiliary equipment shall be suitable in all respects for operation under all the conditions of the locally where it will be installed and shall be capable of developing the specified output thereunder. The engine shall be capable of driving the alternator continuously at full-rated load without overloading the engine. The set shall operate satisfactorily over a range from twenty-five (25%) percent to one hundred (100%) percent of rated capacity, continuously.

8. **Single-Source Responsibility.** Obtain engine generator system components from a single manufacturer with responsibility for entire system. Unit shall be a representative product built from components that have proven compatibility and reliability and are coordinated to operate as a unit.

B. Engine

1. **Type.** The engine shall be designed to operate on No. 2 fuel oil commercially available to the Owner and shall be of the four (4) cycle, turbocharged and water cooled type with unit mounted radiator cooling.

   The brake-horsepower rating of the engine shall be not less than the kilowatt rating of the alternator divided by the factor seven hundred and forty-six thousands (7,046) and by the input-output efficiency of the alternator including losses due to all auxiliary equipment.

   The engine speed shall be governed by an electronic governor with electric actuator to maintain the alternator frequency within three (3) hertz maximum from no load to full load and full load to no load. The frequency variation shall not exceed plus or minus twenty-five hundredths (±0.25) of one (12) percent (± 0.15 hertz) of mean value for any constant load between no load and full load.

   The engine shall be suitable for direct connection to the alternator.

2. **Cooling System.** The cooling system shall include a unit mounted radiator, coolant, filter, belt-driven pusher fan, self-sealing pre-lubricated coolant pump, corrosion resistant coolant filters,

thermostat temperature control, temperature and pressure gauges, high engine temperature shutdown, flexible coolant lines, a radiator air discharge duct adaptor, and a radiator core and fan guard.

The radiator and engine cooling system shall be filled with a fifty (50%) percent solution of ethylene glycol and water and shall be protected with a corrosion inhibitor compatible with the solution.

3. Fuel Storage System.

a) Above ground fuel storage tank is specified in the drawings. It shall have a minimum capacity for 72 hours.

b) Contractor is responsible for compliance with federal regulation 40CFR112 -- Oil Pollution Prevention and with Environmental Quality Board (*Junta de Calidad Ambiental,* EQB*)* regulations.

c) The contractor shall prepare, certify and obtain the approval from the Environmental Quality Board (*Junta de Calidad Ambiental)* of an Emergency Spill Prevention Control and Countermeasure Plan for the fuel tank in accordance with Federal Regulation 40CFR112 and in accordance with regulations of the Environmental Quality Board.

d) The Contractor shall build the secondary containment tank and/or the containment dike specified in the Construction Drawings in compliance with Federal regulation 40CFR112, and with EQB regulations. If a secondary containment metal tank or a containment dike is not specified in the Construction Drawings, the Contractor shall design and build an impermeable concrete dike or secondary containment in compliance with regulation 40CFR112, EQB regulations and with the approval of the Engineer. The dike shall have a minimum capacity of the entire contents of the tank plus 10 percent.

e) Provide necessary suction and return line connections at pipe openings provided.

f) Fuel piping between storage tank, day tank and engine shall be type K soft temper copper tubing with flared fittings. Where installed underground or embedded in concrete, tubing shall be run in protective conduit made of standard weight black steel pipe.

g) Tapped openings in storage tank shall be bushed to desired size with single-or double-tapped cast-iron tank bushing.

h) Provide foot valve on lower end of suction line in tank, 3-in. (75 mm) above bottom of tank. It shall be an all-bronze, double-poppet combination foot valve and strainer.

i) Day tank vent shall be standard weight, black steel pipe with screwed malleable-iron fittings.

4. Fuel lines. Fuel lines shall not pass though the walls or the floor of containment dikes. Fuel lines can be installed in the interior of a concrete open channel approved by Engineer or can be installed in contact with the ground. Lines installed in the interior of a concrete open channel shall be covered with an aluminum, stainless steel or plastic grill. The channel and the grill shall

be designed to resist the transit of persons and equipment through the service life. Fuel lines in contact with the ground shall be designed, build and protected against corrosion according to the following:

a) Lines made with fiber glass reinforced plastic shall comply with any one of the following standards:

1) Underwriters Laboratories (UL) Subject 971

2) (UL) Listed Non-Metal Pipe and with Underwriters laboratories (UL) Standard 567, Pipe Connectors for Flammable and Combustible and LP Gas.

b) Lines made with steel shall have the following type of cathodic protection:

1) Be coated with an adequate dielectric material.

2) The cathodic protection systems shall be designed by an expert in corrosion.

3) Impressed current systems shall be designed to allow the verification of the working system according to Rule 302 of the "Reglamento para el Control de la Contaminación Atmosférica (RCCA)".

4) Operate and maintain cathodic protection systems as specified in Rule 302 of the RCCA or according to guides established by the Puerto Rico Environmental Quality Board.

c) Lines made with steel shall have cathodic protection complying with any one of the following standards: a) American Petroleum Institute (API) Publication 1632, Cathodic Protection of Underground Petroleum Storage Tanks and Piping Systems; b) Underwriters Laboratories (UL) Subject 971, (UL) Listed Non-Metal Pipe; Underwriters Laboratories of Canada Standard CAN 4-S633-M81, Flexible Underground Hose Connectors.

d) Steel lines can be built without additional corrosion protection in the following situations:

1) The line is installed in a place where an expert in corrosion has determined that the ground is not corrosive enough to cause a leak during the service life of the line, and owners and operators maintain a register demonstrating compliance with this during the service life of the line. Compliance with this requirement shall be made according to the following: a) National Fire Protection Association Standard 30, Flammable and Combustible Liquids Code; or b) National Association of Corrosion Engineers Standard RP-01-69, Control of External Corrosion on Submerged Metallic Piping Systems.

2) The Puerto Rico Environmental Quality Board determines that the construction and protection of fuel lines against corrosion is designed to prevent fuel leaks or fuel leak threats providing equal or better protection to human health and to the environment than the requirements for fuel lines included above under "4. Fuel Lines".

5. **Fuel System.** The fuel system shall consist of an engine mounted cam shaft driven fuel oil lubricated rotary injection pump and shall include a reusable dry element air cleaner, a fuel transfer pump, an electric booster pump, fuel filters and automatic fuel shutoff.

6. **Governor.** The governor shall be of the electronic type with electric actuator. The governor shall be capable of adjusting the speed plus or minus five (± 5%) percent.

   In addition, a separate overspeed centrifugal switch shall be furnished and installed to protect the engine when the maximum safe speed is exceeded.

7. **Lubricating System.** Lubricating oil shall be high-detergent type meeting engine manufacturer's specifications. Lubricating oil shall be supplied under pressure from a sump in the engine crankcase by means of an attached positive displacement, gear design, lube oil pump. The pump and lube oil system shall be protected by a built-in pressure-relief valve. The lube oil system shall include a suction strainer and a sump and full-low strainer on the discharge side with a full-flow type filter, using replaceable cartridges. Oil shall be circulated through built-in air and drilled passages to all moving parts. Cylinder walls shall be lubricated by either splash or timed force feed lubrication. The sump shall have provisions for draining and filling, and for determining the oil level. Lube oil shall be cooled with the engine jacket water through a shell and tube type heat exchanger. An oil pressure gauge and a row oil pressure shutdown shall also be furnished and installed.

8. **Exhaust System.** A complete exhaust system shall be furnished and installed with the engine including manifolds, flexible exhaust connectors, exhaust piping and exhaust silencer mounted as shown on the drawings. The silencer shall be critical type as specified.

   Install muffler horizontally on sprint type compensating hangers as close to unit as practical. Provide 1/2 inch (12mm) copper drain with draincock from bottom of muffler to nearest floor drain for periodic draining of muffler.

9. **Engine Exhaust Emissions.** Comply with applicable Federal State and local government requirements. In the event that any emergency energy generator is to be used, the Contractor shall obtain a "Permiso de Fuente de Emisión (PFE)" from the Puerto Rico Environmental Quality Board for the installation and operation of the same.

10. **Starting System.** Starting shall be by a twenty-four (24) volt positive engaging, solenoid shift electric starter and battery with cycle cranking and cranking limiter.

    The engine shall have a twenty-four (24) volt battery charging alternator with an automatic charge rate regulator and ammeter.

    The battery shall be a heavy duty type, nickel cadmium, as manufactured by Knife or approved equal, with ample capacity for cranking the unit and with not less than eighty (80) ampere-hour capacity. The Contractor shall furnish and install an approved battery rack with acid-resistant paint and battery cables with terminals. It shall be designed for mounting in an approved manner at the location shown on the drawings. Its location shall be convenient and accessible for maintenance.

Low oil pressure, high water temperature, low water level and over speed shutdowns shall be provided.

The integral automatic engine starting control shall normally permit at least three (3) cranking attempts of fifteen (15) seconds duration with rest periods of ten (10) seconds with lockout after three (3) unsuccessful: cranking attempts.

A cranking limiter shall be furnished and installed to protect the battery and starting circuit. The limiter shall open the starting circuit if the engine has not started within the time specified. The Contractor shall furnish and install an indicating light with the legend "Cranked But Did Not Start".

The starting control shall include a cranking disconnect relay to provide positive protection against closing of the cranking circuit while the engine is in motion.

A standard current-limiting battery charger Model 305C346 as manufactured by Onan Corporation or approved equal, rated twenty-four (24) volts DC, six (6) amperes shall be furnished and installed. The unit shall be designed to operate at one hundred and twenty (120) volts, sixty (60) hertz and single phase. The charger shall include a DC voltmeter, DC ammeter, DC alarm, float voltage rheostats and NEMA 4 enclosure designed for mounting on the generator frame.

11. Attached Accessories. The engine shall include the following accessories. Factory-mounted by the manufacturer of the engine generating set, to form an integral part of the factory-packaged unit:

Crankcase breather
Intake filter silencer, dry type
Over speed centrifugal switch
Governor
Top outlet exhaust fitting
Fuel injection system
Fuel filters-primary and secondary fuel filters of replaceable element type
Fuel pump and piping
Fuel oil solenoid valve
Positive displacement lube oil pump and built-in relief valve
Dual lube oil filter, full-flow type, with replaceable element
Lube oil strainer, full flow
Lube oil cooler
Automatic lube oil temperature control valve
Lube oil piping
Centrifugal jacket water pump
Automatic jacket water temperature control valve
Jacket water piping Jacket water heater with thermostat
Automatic engine control devices
Engine gauge board
Unit mounted radiator (fan cooled)

Radiator float switch

12. **Vibration Insulators for Piping.** Vibration insulator connectors for piping connections to the engine shall be of the metallic flexible type As manufactured by Flexonics Dv. UOP, Inc.; Anaconda Metal Rose The Anaconda Company, Brass Div. or approved equal, with reattachable couplings on each end, and of materials suitable for the intended use at the temperature: and pressure required. The complete assemblies shall be furnished and installed in the sizes required by the equipment actually furnished and in: the minimum lengths recommended by the manufacturer for continuous flexure conditions.

C. Alternator.

1. **Type of Equipment.** The alternator shall be an open dripproof, single bearing, four (4) pole, brushless, revolving field, synchronous type with exciter and voltage regulator as manufactured by Onan Corporation or approved equal. It shall be directly connected to the engine fly-wheel housing and driven through a semiflexible driving flange to insure permanent alignment, and shall be free of any critical torsional vibration within the operating speed. Voltage regulation shall be within plus or minus two (+ 2%) percent of rated voltage. Voltage variation at any steady state load from no load to full load shall not exceed plus or minus one (±1%) percent of the mean valve. A rheostat shall provide plus or minus five (±5%) percent voltage adjustment. The alternator shall be adequately provided with shielding of the commercial type. for suppression of radio frequency interference.

   Both stator and rotor shall have Class F insulation. Both shall be protected with one hundred (100%) percent epoxy impregnation. The stator and rotor shall be tropicalized and fungus proofed.

   The generator shall be furnished with adequate space heaters designed to operate on single phase, one hundred and fifteen (115) volts. They are to prevent internal condensation and shall be designed to operate continuously when generator is idle.

   Stable alternator operating conditions shall be re-established within two (2) seconds following any sudden change in load between no load and full load or between full load and no load. The engine generator shall be capable of starting connected load as shown on plans, and have a voltage drop not higher than twelve (12%) percent. Stable alternator operation shall be defined as operation with terminal voltage held constant within plus or minus one (± 1%) percent of rated voltage. Temperature rise shall be as defined by NEHA HG 122.40.

   Before approval the manufacturer shall furnish the Engineer with a torsional vibration analysis of the engine-generator combination shoving it free from harmful torsional vibration within plus and minus ten (± 10%) percent of its normal operating speed range.

   The alternator shall be rated in accordance with NEMA Standards for continuous duty plus ten (10%) percent two (2) hour overload capacity.

   The alternator shall be supplied with pole face (amortisseour) windings.

The direct axis transient reactance shall not be greater than twenty (20%) percent based on rated kw, eight-tenths (0.8) power factor and rated voltage when operating at design speed. Wave form deviation factor shall not exceed six (6%) percent line to line, or line to neutral, at any load.

Alternator shall be equipped with a built-in brushless exciter, silicon controlled rectifier (SCR) type.

The alternator terminal box shall be suitably sized to accept the cables with no sharp bending of the conductors. The terminal box shall also be furnished with shunt trip circuit breaker with a dc coil to be tripped by all shutdown functions in the instrument panel.

2. Instrument Panel. An instrument panel, shall be furnished and installed in a NEHA 4 enclosure with a one hundred and twenty (120) volt thermostatically controlled space heater, furnished and installed at the alternator end of the unit. The instrument panel shall be manufactured by the manufacturer of the generating set, Automatic Switch Co. or approved equal. It shall be wired, tested and shock mounted on the generating set by the manufacturer of the alternator. All wiring and connections shall be numbered, tagged and terminated in one (1) common terminal block.

The instrument panel shall contain the following engine instruments: oil pressure gauge; coolant temperature gauge; battery charge ammeter; three (3) position selector switch ("Stop-Automatic-Manual"); tachometer; signal lights with resets for high coolant temperature cutoff, low coolant level cutoff, low oil pressure cutoff, over speed shutdown and over cranking protection; indicating lights and alarm terminals for alarms mounted on the control panel shall be provided for the five (5) main features. A prealarm engine monitor shall also be furnished and installed.

The instrument panel shall also contain the following items for the alternator: voltage regulator, manual reset overload protection; voltmeter with line selector switch for three (3) lines; ammeter with phase selector switch for three (3) phases; running time meter; frequency meter; voltage adjusting rheostat; current transformers; automatic starting controls and a control circuit designed to actuate the generator output circuit breaker shunt trup from the generator battery upon engine safety shutdown.

Alarm lights, with suitable nameplates, and actuated as indicated shall be provided as follows:

FUNCTION	ACTUATOR
Low oil pressure prealarm	Low pressure contact, oil pressure dual element switch.
High coolant temperature prealarm	'High' temperature contact, coolant temperature dual element switch.
Overspeed shutdown	Overspeed switch.
Engine overcrank shutdown	Crank timer.
Low oil pressure shutdown	‘Low-Low’ pressure contact, oil pressure dual element switch.
High coolant temperature shutdown	'High-High' coolant temperature contact, high coolant temperature dual element switch.
Radiator low coolant level shutdown	Radiator float switch or proximity device.

Engine shutdown shall occur by actuation of any of the following devices:

Overspeed switch
Crank failure switch
Low water level switch
'Low-Low' oil pressure switch
'High-High' coolant temperature switch
Low fuel level

One (1) alarm relay for DC failure and one (1) auxiliary contact for each engine shutdown function parrallel with DC alarm contact for remote generator fault alarm shall also be furnished and installed.

A local alarm light and reset switch shall be furnished and installed either in the generator control panel. which shall be actuated by any of the prealarm or alarm devices.

A contactor (starting relay) shall be included, if necessary, to prevent the auxiliary pilot contact on the transfer switch to be loaded beyond its rating.

All relays must be heavy duty industrial type with solid wiping type contacts and must be suitably plated to minimize oxidation voltage drop.

Automatic engine starting controls shall be as built by the engine generator manufacturer; Automatic Switch Co. or approved equal . They shall be installed in a NEMA I enclosure with a one hundred and twenty (120) volt thermostatically controlled space heater.

Generator will not start under low fuel level alarm condition. Provide a low fuel level sensor and a low fuel level alarm containing a visual (pilot light) and audible indicator.

D. Miscellaneous.

1. **Automatic Load Transfer Switch.** Under this Section, the Contractor shall furnish and install an Automatic Load Transfer Switch, Model as indicated on plans, as manufactured by Onan Corporation or approved equal, NEMA 3R enclosure. The transfer switch shall have the following features, ratings, controls and accessories:

   The transfer switch shall be a double coil design type, electrically interlocked to provide positive electrically guided action from "normal" to "standby" position. it shall have a mechanical interlock to prevent both sources from supplying the load simultaneously. Four pole type.

   Ampere rating shall be as indicated on plans.

   Voltage rating shall be six hundred (600) volts for both inductive and non-inductive loads.

   Main contacts shall be double break design of solid silver cadmium oxide.

   The inrush current capacity shall be a minimum of twenty times normal rating.

The interrupting current capacity shall be a minimum of fifteen (15) times normal rating.

Contacts shall have individual blow-coils to prevent cross arcing. Line side contacts shall be mechanically held to permit de-energizing the operating coil.

On interruption of normal line power the standby start-stop circuit shall close the remote start control on the standby plant thus starting the engine. A time delay relay shall be provided to permit adjustment from five-tenths (0.5) second to ten (10) seconds on standby plant starting after a normal line power interruption.

A transfer switch pilot circuit shall be provided to activate transfer to standby power when standby plant reaches approximately eighty (80%) percent or rated voltage.

Phase protection shall be provided to initiate transfer to standby on complete failure of any one (1) phase of the three (3) phase, four (4) wire main incoming line from normal power source.

An adjustable time delay relay shall be provided to permit adjustment from zero (0) to thirty (30) minutes for retransfer to normal power after normal power is restored.

Solid state time delay for engine stopping adjustable from five-tenths (0.5) seconds to five (5) minutes to allow generator set to run unloaded for cooling prior to shutdown.

"With load-without load" switch to select test or exercise with or without load.

"Normal Test" switch having one (1) position for automatic operation (power failure or exerciser) and one (1) position to start generator for testing with or without load.

Adjustable exerciser designed to operate the engine generator in multiples of fifteen (15) minute periods at designated intervals.

Generator under voltage sensor to prevent transfer to generator before voltage reaches satisfactory level.

"Normal-Emergency" lamps.

The load transfer switch shall have a swing-cut service panel and a door lock.

Generators greater than 200 Kw must included a reverse power protection.

2. Electrical Work. All electrical equipment. controls, wiring and appurtenances which constitute an integral part of the equipment furnished and installed under this Section shall be furnished and installed hereunder.

External conduit, wiring. cable and controls shall be furnished and installed and all necessary connections will be made by the Contractor.

The manufacturer of the equipment furnished under this Section shall furnish to the Contractor complete data on the characteristics of the items furnished and all wiring and connection

diagrams required and supervise the work to assure that his equipment is properly connected up and will function as intended.

3. **Lubrication.** Suitable provision shall be made for lubrication of all bearings and other moving parts. Grease fittings shall be provided where required.

4. **Waste Oil Container.** A suitable galvanized steel container shall be provided for the collection of diesel-engine waste oil. The container shall be of the size recommended by the manufacturer of the diesel engine and shall be furnished complete with handles, covers and other necessary accessories he may recommended.

5. **Fuel Oil Piping.** All external full-oil piping for connecting to piping furnished integral with the diesel-engine generating set, fuel-oil tank and as required to furnish a complete system will be furnished and installed by the Contractor. Piping shall be black pipe FC 184 as manufactured by AERO QUIP or approved equal.

6. **Tools and Supplies.** The Contractor shall furnish a complete set of standard and special wrenches, spanners, and other tools necessary to assemble and disassemble all equipment and any other special tools required to service, repair and adjust the equipment. Wrenches shall be of forged steel, casehardened and full finished. A suitable substantial metal tool box, provided with a locking device and arranged for wall mounting, shall be furnished for the tools.

7. **Anchor Bolts.** All anchor bolts and nuts required for the equipment furnished shall be Type 316 stainless steel.

8. **Spare Parts.** In addition to the spare parts listed below the Contractor shall provide the Engineer with a list of spare parts and supplies which the manufacturer considers desirable to be maintained in the stock of the Owner. The list shall show the unit price applicable to each spare part or assembly recommended.

   Provide the following spare parts with the units:

   Four (4) lube oil filter elements. Two (2) sets of belts. Six (6) fuel injectors. Two (2) complete sets of gaskets. Two (2) complete sets of fuses and lamps.

   Pack spare parts in suitable containers or boxes bearing labels clearly designating contents and piece of equipment for which they are intended. Deliver spare parts at completion of the work, at which time deliver them where directed by the Engineer.

9. **Control and Switchgear Floor Matting**. Provide nonslip matting in front of metal-clad switchgear. Matting shall be heavy-duty rubber compound which is fire, oil, ozone, and water resistant, per ASTM D 178, Class 2. Matting shall be 6.35 mm thick by 915 mm 1/4 inch thick by 3 foot wide and with a length equal to the length of the control and switchgear.

10. **Installation of Equipment.** The Contractor shall at the time of shipment of the equipment, submit to the Engineer six (6) copies of parts catalogs and complete instruction for erection, in by him. Six (3) copies shall be in English and six (3) copies shall be in Spanish. The instructions

shall be complete in every detail and adequate for proper installation, operation, maintenance, lubrication, repair, dismantling and reassembling of equipment furnished.

The equipment shall be assembled, erected and installed in strict accordance with the details shown on the drawings and in compliance with the requirements of the manufacturer of the equipment.

The unit shall be erected on a concrete foundation of suitable dimensions at the location and in accordance with the details shown. The Contractor shall furnish and place nonshrink grout of the non-metallic base type, Ceilcote 648 Grout, as manufactured by Ceilcote Company, Inc.; W.R. Bonsal, Inc. or approved equal, where shown on the drawings and required for the installation of equipment. Equipment shall be set level on a full bed of nonshrink grout and secured with anchor bolts. Anchor bolts shall be properly set to template in the concrete, at the time of placing concrete.

Installation work shall be done by experienced mechanics only. All parts shall be placed in proper alignment and adjustment and all elements requiring lubrication shall be left filled with grease or oil. Drives or other parts which cannot be protected by painting shall be covered with grease or white lead and tallow to prevent rusting. Equipment shall be protected at all times, both before and after erection, from damage of any sort.

The Contractor shall furnish the services of an accredited representative of the manufacturer for such time as is necessary to supervise the proper installation, testing and initial operation of the equipment.

Contractor shall paint exterior surfaces of equipment using two coats of acceptable oil and heat-resistant paint, applied after surfaces have been thoroughly cleaned and prepared with suitable priming coat.

11. Cleaning. Upon completion of installation inspects system components. Remove paint splatters and other spots, dirt and debris. Touch up scratches and mars of finish to match original finish. Clean components internally using methods and materials recommended by manufacturer.

SECTION 162320
AUTOMATIC LOAD TRANSFER CONTROL

PART 1. GENERAL

1.01 SUMMARY

1.01.1 SECTION INCLUDES

This section includes furnishing and installing an automatic load transfer control for the corresponding standby generating set.

1.02 WARRANTY

A. The complete Automatic Load Transfer Control shall be warranted free from defects in material and workmanship for a period of two years after being placed in service.

PART 2. PRODUCTS

A. The complete Automatic Load Transfer Control shall be furnished by the manufacturer of the standby generating set alternator to maintain compatibility of components and to provide a single local source of responsibility and service for the entire standby power system.

B. The complete Automatic Load Transfer Control shall be enclosed in two NEMA 12 enclosures for installation indoors. Each enclosure shall have door handle with key operated lock. One- enclosure shall contain the motor operated transfer switch (individual motor for each set of contactors), instant transfer relay and neutral bar. The transfer switch shall be mechanically held, both sides. It shall be electrically and mechanically interlocked (walking beam interlock) to positively prevent the food from being energized simultaneously by normal and standby power. The special silver alloy contactors shall be enclosed in ARC CHAMBERS that confine and extinguish breaking arcs in less than one-half hertz (1/120 of a second) and prevent any cross arcing. Quickmake, quickbreak, over center switching control. The second enclosure with swing-out service panel (pre-punched to accommodate future control additions) shall contain an adjustable trickle battery charger with milliammeter, the generating set start-stop circuit, the transfer switch pilot circuit, and all other components. The complete load transfer control shall contain no wearing surfaces or rotating parts requiring routine lubrication or maintenance. All 12-volt and 24-volt relays shall have gold flashed contacts that operated with a wiping action.

C. Time delay to start standby power. A pneumatic time delay, adjustable up to 10 minutes shall be provided to prevent the standby power from needless starting and stopping during periods of momentary voltage fluctuations from, the normal power source.

D. Time Clock Exerciser.

E. Time delay to retransfer load. After normal power has returned to service, a time delay pneumatic relay adjustable from 2 minutes to 60 minutes, shall be provided to delay re-transferring the load to normal power for the purpose of (1) overriding the initial voltage fluctuations of the returning normal power and (2) providing a predetermined minimum period of operating time for

standby power, If the generating set should fail during the delay period, the time delay shall be by passed and the load instantly re-transferred to normal power.

F. Time delay to stop standby power. After the load has been re-transferred to normal power, a time delay pneumatic relay adjustable from 2 minutes to 60 minutes, shall be provided to allow the engine to cool by permitting the generating set to operate unloaded for a predetermined period of time before shutdown.

G. Indicating lights. Colored indicating lights shall be provided on the enclosure door and labeled to indicate transfer switch position (green - normal power, red - standby power).

H. Disconnect device. A means shall be provided to electrically disconnect the control section from the transfer switch to permit safe access for maintenance or service, of the control during periods of normal operation.

PART 3. EXECUTION

A. Contractor shall furnish, install and test the automatic transfer control indicated in the Construction Drawings and specified.

B. Control Floor Matting. Provide nonslip matting in front control. Matting shall be heavy-duty rubber compound which is fire, oil, ozone, and water resistant, per ASTM D 178, Class 2. Matting shall be 6.35 mm thick by 915 mm 1/4 inch thick by 3 foot wide and with a length equal to the length of the switchgear.

C. After all final tests and adjustments have been completed, fully instruct the proper Owner's Representative in all details of operation of the unit. Furnish five copies of manuals, in bound form containing data covering capacities, maintenance and operation of the unit. Operating instructions shall cover all phases of control and include the following:

1. Lubrication Schedule: Indicating type and frequency of lubrication required.

2. List of Spares: Recommended for normal service requirements.

3. Parts List: Identifying the various parts of the equipment for repair and replacement purposes.

4. Automatic Controls: Diagrams and functional descriptions.

5. Construction Drawings shall be furnished showing complete wiring diagrams as well as the schematic connections of the specific Automatic Load Transfer Control being furnished.

D. Tools. All special tools for proper operation and maintenance of the unit shall be delivered to the Owner's Representative.

3.02 FIELD QUALITY CONTROL

3.02.1 SITE TEST

A. An operational test of the entire system shall be conducted by a representative of the manufacturer in the presence of the Project Engineer or his representative and the operating personnel.

B. Tests. Tests shall be performed after the unit is completely installed. Unit shall be run at no-load and at full-load and instruments used for engine and generator performance to comply with all mentioned requirements. Contractor shall provide all labor, materials, and equipment to perform a complete test of the unit. All defects shall be corrected by the Contractor at no additional cost to the Owner.

SECTION 162710
GENERAL PURPOSE DRY-TYPE TRANSFORMERS

PART 1. GENERAL

1.01 SUMMARY

1.01.1 DESCRIPTION

Furnish and install ventilated dry-type transformers.

1.02 REFERENCES

A. Underwriters Laboratories, Inc. (UL).

1. UL 506: Transformers, Speciality.

B. National Electrical Manufacturer Association (NEMA).

1. ST 20: Dry-Type Transformers for General. Applications (ANSI C89.2).

C. American Society for Testing and Materials (ASTM):

1. D 635: Rate of Burning and/or Extent and Time of Burning of Self-Supporting Plastics in a Horizontal Position.

D. National Fire Protection Association (NFPA).

1. National Electrical Code (NEC)

1.03 REQUIREMENTS OF REGULATORY AGENCIES

A. Furnish transformers in accordance with NEMA ST20 and UL 506.

B. Furnish all transformers with UL listing mark.

1.04 TESTS

A. Furnish results of audible-sound-levels tests in accordance with NEMA ST 20 of similar size transformer.

PART 2. PRODUCTS

2.01 MATERIALS

2.01.1 TRANSFORMERS

A. Furnish general-purpose dry-type transformers in indoor enclosure. On single- phase transformers and three phase transformers above 9 KVA provide not less than two windings per phase.

B. Do not use autotransformers in place of general-purpose dry-type transformers.

C. Furnish at least two 2-1/2 percent full capacity tape above and below nominal in high voltage winding for transformers rated above 15 kva. Two five percent tape below rated voltage for transformers rated 15 kva and below.

D. Furnish transformers, single-phase or three-phase, as indicated. Transformers furnished with kva ratings as indicated.

E. Furnish three-phase transformers, Delta-Wye, Delta-Delta or Wye-Wye connected as indicated, and conforming to latest NEMA standards. Scott Tee connected transformers are not acceptable above 9 KVA.

F. Furnish transformers with primary and secondary voltages and frequency, Wye connected, as indicated for secondary windings, neutral to be brought out.

G. Furnish transformers designed for continuous operation at rated kva with normal life expectancy as defined in NEHA ST 41.0. Ensure that performance is obtained without exceeding 115 deg. C average temperature rise by resistance or 145 deg. C hot spot temperature rise in 40 deg. C maximum ambient and 30 deg. C average ambient. Do not allow maximum coil hot spot temperature to exceed 185 deg. C.

H. Furnish transformers with 220 deg. C insulation materials with proven reliability for 15 KVA transformers and above. Furnish 185-deg. C insulation on transformers below 15 KVA.

I. Furnish transformers made of flame retardant materials that will not support combustion as defined in ASTM D 635.

J. Furnish core mounting frames and enclosures of welded and bolted construction with sufficient mechanical rigidity and strength to withstand shipping, erection and short circuit stresses.

K. Furnish transformers designed to meet UL thermal overload test of 200 percent of rated current for one half-hour.

L. Furnish transformers not to exceed the 65-deg. C rise established by UL as safe limit for maximum surface enclosure temperature.

M. Furnish transformers with sound level not exceeding:

	Average Sound Level in dB
Trans. Kva	**NEMA ST 20**
0 – 09	40
10 – 50	45

51 – 150	50
151 – 300	55
301 – 500	60

N. Install transformers with sound levels greater than 50 dB on resilient vibration isolating mounts to prevent amplification of sound.

2.02 MANUFACTURERS

2.02.1 TRANSFORMERS

A. General Electric Company, Schenectady, NY.

B. Square D Co., Park Ridge, IL.

C. Westinghouse Electric Corp., Pittsburgh, Penn. 15222.

D. Acceptable equivalent.

PART 3. EXECUTION

3.01 INSTALLATION

A. Install and guard transformers as specified by latest NEC and ANSI standards, and in accordance with manufacturer's instructions.

B. Furnish adequate space around transformer to dispose of transformer full load losses by ventilation without creating excessive ambient temperature.

C. Unless indicated otherwise in the Construction Drawings, wall mount transformers rated 15 kva and below. Floor mount transformers rated above 15 kva.

D. Provide lifting lugs and jacking plates as required on transformer enclosure.

E. Furnish and install suitable supports for all transformers.

F. Clean metal parts, excepting cores and core mounting frames, then rustproof and apply heavy coating of inert primer. Paint coverplates and external metal parts with two finish coats of ANSI No. 61 or 49 Gray.

SECTION 162720
TRANSCLOSURE

PART 1. GENERAL

1.01 SUMMARY

1.01.1 SECTION INCLUDES

This section includes furnishing all labor, plant, equipment and materials for the installation of a transclosure, complete with transformers, load-break disconnects switch, fuses, metering and all appurtenances required for a complete installation.

1.02 SUBMITTALS

A. The Contractor shall submit to the Engineer & PREPA in accordance with specifications complete sets of detailed Construction Drawings for approval. Included on the submitted drawings shall be complete details of the transclosure as well as complete details of all equipment housed in or mounted on the transclosure. All electrical cables will enter the transclosure from below. All conduit entrance areas in the transclosure shall be shown on the submittal drawings. All of the material mentioned above shall be submitted in one complete submittal not more than 90 days after the date of notice to proceed.

1.03 QUALITY ASSURANCE

1.03.1 CERTIFICATIONS

A. Six (6) copies of certified test reports should be furnished.

B. As a consideration precedent to final acceptance of the work, the Contractor shall furnish the Engineer with five (5) copies of the manufacturers certifications stating that the equipment has been properly installed, aligned and tested and meets all requirements for satisfactory performance under the conditions specified herein.

PART 2. PRODUCTS

A. Transformers. Shall be manufactured by General Electric, Westinghouse, or approved equal and shall comply with the requirements of improved losses.

1. The regrigerant shall be non-PCB. Provide a sticker placed in the transformer tank.

2. The tank of transformers to be installed 1 mile from the shore shall be made of stainless steel. For the purpose of this item the shore is located at the mean sea level.

B. Manufacturer's Qualifications and Unit Responsibility. The Contractor shall cause the equipment to be furnished under this section to be the product of firms regularly engaged in the design and manufacture of this type of equipment. The Contractor shall be prepared to document the manufacturer's technical competence, skill, resources and ability to complete the work specified

herein with the requisite degree of quality in a timely and efficient manner. All documentation shall be submitted to the Engineer and reviewed and accepted prior to design, fabrication and shipment of any components specified herein.

The Contractor shall cause the transclosure, including all appurtenances specified herein, to be furnished by one manufacturer, who shall assume complete responsibility for this portion of the work.

C. Operating Conditions and Requirements. The equipment to be furnished under this section will be installed outdoors at sea level at a site where weather conditions are influenced by a nearby seacoast. Ambient temperatures are expected to range between 65°F and 100°F. Ambient moisture will be as high as 95 percent. Steady wind velocities may range up to 150 miles per hour, with gusting to 190 miles per hour. Salt water spray and mist produce accelerated corrosion conditions for exposed ferrous metal components

PART 3. EXECUTION

A. Contractor shall provide all labor, plant, equipment, materials and others for the installation of a transclosure, complete with transformers, load-break disconnects switch, fuses, metering and all appurtenances required for a complete installation.

B. Supervision of Installation. All equipment furnished hereunder shall be installed, aligned and tested under the supervision of installation specialist's factory trained by the equipment manufacturers. Nothing in this provision, however shall be construed as relieving the Contractor of his overall responsibility for this portion of the work. As a consideration precedent to final acceptance of the work, the Contractor shall furnish the Engineer with five (5) copies of the manufacturers certifications stating that the equipment has been properly installed, aligned and tested and meets all requirements for satisfactory performance under the conditions specified herein. Nothing contained within these provisions shall be construed as relieving the Contractor of his responsibility for this portion of the work.

C. Installation. The arrangement shown in the Construction Drawings is base upon the best information available to the Consulting Engineer at the time of design and is not intended to show exact dimensions peculiar to any specific equipment unless otherwise shown or specified. It is therefore to be anticipated that the structural slab and the electrical conduits shown, in part or in whole, may have to be changed in order to accommodate the equipment actually furnished. No additional payment will be made for such changes. All necessary calculations and Construction Drawings for any related redesign shall be submitted to the Engineer for his approval prior to beginning the work.

D. Construction.

1. **General.** The transclosure shall be comprised of an incoming line section, a metering section and a transformer section. The transclosure shall be installed in a tropical, seaside location where the weather conditions may reach the extremes.

2. **Incoming Line Section.** This section shall consist of a floor standing, formed, welded metal enclosure, suitable for outdoor service and shall contain:

a) A 3-pole, gang operated disconnect switch rated 600 Amperes, 15 KV, 40,000 AIC.

b) Power fuses, current limiting type, 15 KV with the ampere rating indicated in the Construction Drawings. The fuses shall be electrically located between the switch and the metering equipment.

c) Three (3) distribution type lightning arrests with the KV rating indicated in the Construction Drawings.

d) One (1) bronze, clamp type lug per phase suitable for copper cable of the type and size indicated in the Construction Drawings.

E. Metering Compartment. A separate metering compartment shall be furnished completely ready to accept metering transformers and meters to be provided by the Puerto Rico Electric Power Authority. The metering transformers shall be electrically connected between the power fuses and the transformer. The metering compartment shall be provided with an adequately sized vandal proof-viewing window to provide a clear view of the meter dials when the compartment door is closed.

The metering compartment shall be provided with provisions for padlocking with a padlock to be furnished by the Puerto Rico Electric Power Authority.

F. Transformer Section. This section shall contain three (3), single-phase transformers shall be O.I.S.C., non-PCB. Construction and design features shall include the following:

1. Tank. The tank shall be made of high quality sheet steel ' with a minimum of electrically welded seams. Tanks shall withstand full vacuum. The tank cover(s) shall be welded.

2. Tap Changer. The tap changer shall be manual, externally operated for de-energized service. Provisions for padlocking the operating handle shall be provided.

3. Taps. Four 2-1/2% transformer full capacity taps shall be provided, rated primary voltage.

4. Neutral Bushing. The neutral shall be brought out through an insulated bushing and shall be connected by means of a copper cable or a copper strap to the grounding pad on the transformer.

5. Accessories. The following accessories shall be provided:

a) Two tank grounding pads.

b) Globe type combination drain and lower filter valve.

c) Lifting lugs for lifting complete transformer.

d) Diagrammatic nameplate.

G. Enclosure. The enclosure is intended to be a free standing metal enclosed unit No. 14 gauge, stainless steel enclosure.

Adequate rigidity shall be provided by bending sheet steel to from angles and channels so that the unsupported area of sheet metal shall not exceed 1500 sq. in.

A minimum of two (2) stainless steel, grade 304, heavy duty, pin type hinges shall be provided per door. Minimum gauge shall be No. 14 stainless steel and minimum pin diameter shall be 1/4".

Two (2) hasps per side shall be provided, made of No. 14 gauge stainless steel, grade 304, of suitable size with standard hole for PREPA padlock.

The enclosure top shall be fabricated so that it is rain tight and will not allow the accumulation of water. The top shall be sealed with an asphalt sealer or gasketed to sidewalls.

Doors shall provided with labyrinth bands for control of rainwater and rubber sealing strips so that the entrance of fresh air to the enclosure can be controlled. Also adequate and safe devices shall be provided to secure the doors in the open position.

The primary and ground busses shall be copper. All cable shall be copper. All connectors shall be made of bronze.

All equipment shall, where applicable, be connected to the ground bus by standard 4 bolt, 2 hole bronze connectors on the ground bus. Adequate ground lugs or connectors shall be provided on all equipment where applicable.

Two ground lugs (for #4/0 copper cable) shall be provided, one on each end of the ground bus, for connection to the main ground mat.

The transclosure shall be painted light gray (ANSI-61).

3.01.2 TESTS, INSPECTIONS

A. The following tests shall be made on the transformers in accordance with ANSI C57.12 Test Code for Transformers.

1. Resistance measurements of all windings on the rated voltage connection and at the tap extremes.

2. Ratio test on the rated voltage connection and all taps connections.

3. Polarity and phase relation tests on the rated voltage connection.

4. No-load loss at rated voltage on the rated voltage connection.

5. Exciting current at rated voltage on the rated voltage connection.

6. Impedance and load loss at rated current on the rated voltage connection and on the tap extremes.

B. Temperature test or tests shall be made on one unit only of an order covering one or more units or a given rating. Tests shall be made only when there is no record available of a temperature test on a duplicate or essentially duplicate unit.

1. Applied potential tests.
2. Induced potential tests.
3. Six (6) copies of certified test reports should be furnished.

SECTION 164310
DISCONNECT SWITCHES

PART 1. GENERAL

1.01 SUMMARY

1.01.1 SECTION INCLUDES

This section includes providing all labor, materials, equipment and incidentals as shown, specified and required to furnish and install disconnect switches at every motor location and at other equipment requiring a service disconnect.

1.02 SUBMITTALS

1.02.1 SHOP DRAWINGS

A. Submit for approval the following:

1. Manufacturer's literature, specifications and technical data for disconnect switches proposed for use.

1.03 QUALITY ASSURANCE

A. Reference Standards.

Comply with applicable provisions and recommendations of the following except where otherwise shown or specified.

1. National Electrical Code

2. UL #98, Enclosed Switches

3. NEMA KS – 1, Enclosed Switches

PART 2. PRODUCTS

2.01 MATERIALS

A. Disconnected Switches.

1. Type: Unfused, horsepower rated, heavy duty, single throw, three pole with visible blade and safety handle, 600 volts.

2. Enclosure: NEMA 7 for Class 1 hazardous locations and NEMA 4x stainless stell for indoor, outdoor and damp or wet locations.

3. Provide nameplate identifying equipment being disconnected.

PART 3. EXECUTION

Contractor shall provide all labor, materials, equipment and incidentals as shown, specified and required to furnish and install disconnect switches at every motor location and at other equipment requiring a service disconnect.

3.01 INSTALLATION

A. Mount equipment so that sufficient access and working space is provided for ready and safe operation and maintenance.

B. Securely fasten equipment to walls or other structural surfaces on which they are mounted. Provide independent corrosion resistant supports where no wall or other structural surface exists.

C. Install a disconnect switch at every motor location.

1.01 Install in conformance with Puerto Rico Electric Power Company regulations and the National Electrical Code.

SECTION 164410
PANELBOARDS

PART 1. GENERAL

1.01 SUMMARY

1.01.1 SECTION INCLUDES

Furnish and install panel boards including circuit breakers and cabinets complete, in conformance with the latest NEMA Standards and Federal Specifications listed below.

1.02 REFERENCES

A. National Electrical Manufacturers Association (NEMA).

1. PB1: Panel boards.

2. AB1: Molded Case Circuit Breakers.

B. Federal Specifications (FS).

1. W-P-115A: Panel, Power Distribution.

2. W-C-375B: Automatic Circuit Breakers.

3. QQ-S-365B: Silver Plating, Electro deposited, General Requirements for.

C. National Fire Protection Association (NFPA).

1. National Electrical Code (NEC).

D. Underwriter's Laboratories, Inc.

1. UL 67: Panel boards.

PART 2. PRODUCTS

2.01 MANUFACTURERS

A. Panel boards.

1. Manufacturers acceptable contingent upon products' compliance with the specifications:

a) General Electric Company, Schenectady, NY.

b) Westinghouse Electric Corp., Distribution Equipment Division, St. Louis, MO.

c) Square D Company, Park Ridge, IL.

d) Cutler-Hammer Products, Milwaukee, WI.

e) I-T-E Electrical Products (Siemens), Alpharetta, GA.

f) Or approved equal.

2.02 MATERIALS

A. Panel boards.

1. Factory assembled dead front type panel boards.

2. Furnish panel boards complete with branch circuit breakers and a main circuit breaker or main lugs only as indicated.

3. Furnish panel boards with full capacity separate ground bus, separate insulated neutral bus and furnish panel boards connected to a 3-phase, 4-wire service or single phase, 3-wire service as indicated.

4. Provide panel boards with the voltage, frequency and current ratings as indicated conforming to NEMA Standard PBI, Federal Specification W-P-115A. U.L. 67, and the N.E.C.

5. Furnish the panel board main and neutral buses, with minimum 98 percent conductivity rectangular copper bars provided with bolted type lugs as necessary.

6. Drill buses to fit either "A", "B" or "C" Phase connectors, and ensure that connectors are interchangeable and installed in a distributed phase sequence.

7. Silver plate buses, connectors and terminals to a minimum thickness of 0.005-in., conforming to the requirements of Federal Spec. QQ-S-365B.

8. Prevent terminal lugs from turning per NEMA standard PBI and ensure they are suitable for the conductor material and size.

9. Provide main bus bracing for each panel board adequate for 10,000 amperes symmetrical short circuit at 240 volts and 14,000 amperes symmetrical short circuit at 480 volts unless otherwise indicated.

B. Circuit Breakers.

1. Furnish bolt-on type branch and main circuit breakers. Furnish frame sizes, trip settings and number of poles as indicated. Clearly and visibly mark circuit breakers with ampere trip rating. Furnish breakers meeting the requirements of F.S. W-C-375B and NEMA AB1.

2. Furnish all breakers with quick-make, quick-break, toggle mechanisms and thermal-magnetic, inverse time limit overload and instantaneous short circuit protection on all poles, unless otherwise indicated. Automatic tripping indicated by the breaker handle assuming a clearly distinctive position from the manual ON and OFF position. Furnish breaker handle that is trip-free on overloads.

3. Do not use single pole breakers with handle ties or bails in lieu of multi pole breakers.

4. Furnish handle lock device on breakers as indicated to prevent the manual opening of the selected breakers.

5. Furnish padlocking device on breakers as indicated to prevent the opening of indicated breakers.

6. Ensure that voltage and interrupting rating of all breakers in a panel board is not less than voltage and short circuit rating of the panel board main buses, as indicated. Furnish breakers suitable to operate satisfactorily at the frequency indicated.

7. Furnish ground fault interrupter circuit breakers for certain circuits as indicated in the Construction Drawings.

8. Furnish single pole breakers with full module size. Do not install two pole breakers in a single module.

9. Furnish time-current characteristic curves and catalog information and data for each size of breaker furnished.

C. Cabinets.

1. Provide NEMA 12 cabinets, unless otherwise indicated and without knockouts. Drill cabinets only for the exact conduit entrances and mounting bolts.

2. Finish cabinet fronts, trims and surface-mounted boxes in ANSI No. 61 or 49, light-gray enamel over a rust inhibitive primer. Attach the fronts (exterior trims) to the boxes or interior trims, by 'quarter-turn, indicating trim clamps. Design cabinets for surface or flush mounting as indicated.

3. Unless otherwise specified, construct panel board cabinets of code-gauge galvanized, sheet steel and equip with Cutters of ample size for the risers and outgoing circuits. Ensure that the cabinets do not exceed 78-in. (1,980 mm) in height.

PART 3. EXECUTION

3.01 INSTALLATION

A. Mount all panel boards such that the height of the top-operating handle does not exceed 6 ft. 6-in. (1,980 mm) from the floor.

B. Hang each door of the cabinet on semi- or fully concealed hinges with a combination catch and lock.

C. On cabinets 48 in. (1,200 mm) high and over, install a 3 point catch assembly latching at top, bottom and approximate middle.

D. Key all panel board locks alike.

E. Provide directory card filled-out.

SECTION 165114
INTERIOR LUMINAIRES AND LIGHTING

PART 1. GENERAL

1.01 SUMMARY

1.01.1 SECTION INCLUDES

A. Furnish and install complete indoor lighting systems, interior luminaires and accessories.

1. Exit signs.

2. Ballasts.

3. Lamps.

4. Luminaries accessories.

1.02 REFERENCES

A. Underwriters' Laboratories, Inc., 333 Pfingsten Road, Northbrook, IL.

B. National Fire Protection Association, Battery March Park, Quincy, MA, 02269 NFPA 70-1996, National Electrical Code.

C. Code for Safety to Life from Fire in Buildings and Structures; National Fire Protection Association; NFPA 101 -1997.

D. Federal Specifications and Standards Superintendent of Documents U.S. Government Printing Office, Washington, D.C., 20402:

1. W-L-101 (5): Lamp, Incandescent (Electric, large, Tungsten Filament)

2. W-L-001166: Lamps, Fluorescent

3. W-L-142a: Lamp holder, adapter, and shade holder, medium screw-shell, 125, 250, and 600 volts.

E. American National Standards Institute:

1. Fluorescent Lamp Ballast: ANSI C82.1 – 1985 (R1 992)

2. High Intensity Discharge Lamp Reference Ballast and Low Pressure Sodium Lamps (Multiple-Supply Type): ANSI C82.4-1992.

3. Electric Lamp Bases and Holders, Fluorescent types: ANSI C81.20-1976.

4. Electric Lamp Bases and Holders, Screw-Shell Types: ANSI C81.10-1976.

5. Wring Devices - Dimensional Requirements; National Electrical Manufacturers Association; NEMA WD 6 -1988.

6. National Electrical Code; National Fire Protection Association; NFPA – Latest Version.

1.03 SUBMITTALS

A. As indicated in SECTION 013340 SHOP DRAWINGS, PRODUCT DATA AND SAMPLES.

B. Indicate dimensions and components for each luminaire that is not a standard product of the manufacturer. Submit manufacturer's shop drawings including photometry data to show that fixtures proposed are of the same type, construction and quality as those indicated. Lighting fixtures listed and labeled by Underwriters' Laboratories.

C. Product Data: Provide dimensions, ratings, and performance data.

D. Submit manufacturer's installation instructions in accordance with General Specifications. Indicate application conditions and limitations of use stipulated by product testing agency specified under Quality Assurance. Include instructions for storage, handling, protection, examination, preparation, and installation of product.

E. Operation and Maintenance Data: Instructions for each product.

1.04 QUALITY ASSURANCE

A. Conform to requirements of NFPA70 and NFPA 101.

B. Manufacturer Qualifications: Company specializing in manufacturing the products specified in this section with minimum three years documented experience.

C. Products: Listed and classified by Underwriters Laboratories, Inc. as suitable for the purpose specified and indicated.

1.05 EXTRA MATERIALS

A. Furnish two of each plastic lens type.

B. Furnish two of each ballast type.

PART 2. <u>PRODUCTS</u>

2.01 MANUFACTURERS

Lighting equipment manufacturers are not indicated or specified. Instead a fixture description, which includes design, material, lamp and electrical characteristics, is given at back of this section.

2.02 MATERIALS

2.02.1 LUMINAIRES

A. Furnish products as indicated in Schedule included in the Construction Drawings.

2.02.2 LAMPS

A. Furnish lamps of types and wattage shown in fixture schedule, as specified for each luminaire.

B. Unless otherwise indicated, furnish fluorescent lamps suitable for 120-volt operation. Type: Rapid start, standard cool white, 48-in. long, and 32 watt, T8 electronic ballast.

C. Exterior luminaries shall be type "vandal proof" provided with at HPS bulb, 75 watt and shall be installed with a photocell providing authomatic operation. "Posi grip" screws are required.

2.02.3 BALLASTS AND CONTROL UNITS

A. Furnish high power factor type ballast for fluorescent lamps. Ballast is required to operate one, two, or four lamps as required by fixture schedule.

B. Fluorescent Ballasts: electronic ballast, suitable for lamps specified. Voltage: Match luminaire voltage.

C. Ballast sound rating: "A".

D. Furnish ballast class P type or equivalent protection, containing a nonrenewable, non-resetting thermal protector; designed for applicable indoor or outdoor use; conforming to UL standard 935.

E. Furnish ballast with certified ballast manufacturer (CBM) label.

F. Furnish ballast with power factor not less than 95 percent.

G. Furnish constant wattage (regulator) type ballast for mercury vapor and metal halide lamps.

H. Ballast: In non-air conditioned spaces, rate for operation in 40-deg. C temperature environment.

I. High Intensity Discharge (HID) Ballasts: ANSI C82.4, high pressure sodium lamp ballast, suitable for lamp specified. Voltage: Match luminaire voltage.

J. Furnish mercury vapor and other H.I.D. ballast suitable for 120-volt, 277-volt or 480-volt operation as indicated.

2.03 FIXTURES.

A. Furnish fixtures complete with lamps of wattage indicated.

B. Furnish each fluorescent fixture with ballast of proper type and characteristics for lamps in fixture and with voltage rating as required by circuit in which fixture is connected.

C. Furnish Vapor tight-Corrosion resistant enclosure.

PART 3. EXECUTION

3.01 INSTALLATION

3.01.1 GENERAL

A. Install suspended luminaires and exit signs using pendants supported from swivel hangers. Provide pendant length required to suspend luminaire at indicated height.

B. Support luminaires larger than 2 x 4 foot (600 x 1200 mm) size independent of ceiling framing.

C. Locate recessed ceiling luminaires as indicated on reflected ceiling plan.

D. Install surface mounted luminaires and exit signs plumb and adjust to align with building lines and with each other. Secure to prevent movement.

E. Exposed Grid Ceilings: Support surface mounted luminaires in grid ceiling directly from building structure.

F. Connect luminaires and exit signs to branch circuit outlets provided under Section 16138 using flexible conduit.

G. Make wiring connections to branch circuit using building wire with insulation suitable for temperature conditions within luminaire.

H. Bond products and metal accessories to branch circuit equipment grounding conductor.

I. Install accessories furnished with each luminaire.

J. Install specified lamps in each exit sign and luminaire.

3.01.2 LIGHTING FIXTURES AND LAMPS.

A. Install types and sizes indicated, complete. Deliver lamps of proper type, wattage and voltage rating to site and install in fixtures prior to completion of project.

B. Install all fixtures to comply with applicable provisions of National Electrical Code. Suspend pendant fixtures by means of suitable outlet box cover type aligners, each having flexible joint permitting unit to hang plumb. Install stems of 1/2-in. galvanized steel conduits, unless otherwise specified.

C. Use aligners of shock absorbing type, where indicated.

D. Use vapor tight aligners with vapor tight fixtures.

E. Install each explosion-proof pendant fixture having stem longer than 12-in. (305 mm), with explosion-proof swivel or flexible fitting permitting fixture to hang plumb. Fixtures with stems shorter than 12-in. (305 mm) aligned by level outlet box mounting, explosion-proof swivels, or other acceptable means.

F. Install recessed fluorescent fixtures in suspended ceiling openings in conformance with manufacturer's recommendations. Install fixtures with adjustable fittings to permit alignment with ceiling panels. Install fixtures in fire-resistive type of suspended ceiling construction, equipped with fireproofing boxes constructed of materials of same fire rating as ceiling panels. Materials in conformance with UL approved building materials list.

G. Install accessories such as straps, mounting plates, nipples, or brackets necessary for proper installation.

H. Connect emergency light fixtures to separate unstitched circuit in lighting panel board in a lighting circuit breaker locked in closed position.

I. Relamp luminaires that have failed lamps at Substantial Completion.

3.02 ADJUSTING

A. Aim and adjust luminaires as directed by Engineer.

3.03 CLEANING

A. Clean electrical parts to remove conductive and deleterious materials.

B. Remove dirt and debris from enclosures.

C. Clean finishes and touch up damage.

3.04 DEMONSTRATION AND INSTRUCTIONS

A. Demonstrate luminaire operation for minimum of two hours.

3.05 SCHEDULE

A. See Construction Drawings.

B.4 - GENERAL INFORMATION FOR CONTRACTORS

Article 1 PRASA OWNER CONTROLLED INSURANCE PROGRAM (OCIP) MANUAL FOR CONTRACTORS AND SUB-CONTRACTORS

Article 2 SUPPLEMENT TO GENERAL CONDITIONS FOR THE PRASA OCIP AND OTHER INSURANCE AND BOND REQUIREMENTS FOR CONTRACTORS AND SUBCONTRACTORS

PUERTO RICO AQUEDUCT & SEWER AUTHORITY

OWNER CONTROLLED INSURANCE PROGRAM

MANUAL FOR CONTRACTORS

AND SUBCONTRACTORS

Prepared By:

The Risk Management and Insurance Office of the
Puerto Rico Aqueduct & Sewer Authority and
Aon Risk Solutions of PR, Inc.

TABLE OF CONTENTS

I. Insurance Administration

Introduction	4
Program Directory	5
Definitions	6
Summary of Coverages	8
OCIP - Provided Coverages	9
Termination / Modification of the OCIP	12
Contractor / Subcontractor Provided Insurance Coverages	14
Contractor / Subcontractor Responsibilities	19
Administration of the OCIP	21

II. Claims Administration

Introduction	23
Claims Directory	24
Claims Procedures	26
Lawsuit or Citation Procedures	27

III. Safety / Loss Control Procedures

Safety Statement	29
Documents to be Submitted by the Contractor	29

IV. Consent Form (Needs to be signed) 34

V. OCIP Forms

Form 1 - OCIP Enrollment	36
Form 2 - Notice of Completion	37
Form 3 - General Liability Notice of Loss	38
Form 4 - Notice of Property Loss	39
Form 5 - Notice of Pollution Liability Loss	40
Form 6 - Safety Compliance Checklist	41

I. INSURANCE ADMINISTRATION

INTRODUCTION

The objective of this manual is to identify, define, and to assign the responsibilities related to the administration of the Owner-Controlled Insurance Program (OCIP) for the Contractors / Subcontractors of the Puerto Rico Aqueduct and Sewer Authority (PRASA).

This manual provides:

- A description of OCIP and the insurance-related responsibilities of the parties involved.
- A basic understanding of the OCIP structure and operation, with an overview of coverage provided it.
- Serves as a guideline for specific administrative procedures.
- Answers to questions that are likely to arise during a project, as well as a directory listing the personnel involved in the OCIP administration to answer questions

This document does not and is not intended to provide coverage interpretations. The terms and conditions of the policies shall govern how coverage is applied.

Updates to this manual will be made accordingly when required.

PROGRAM DIRECTORY

A. Sponsor and OCIP Administrator

Puerto Rico Aqueduct and Sewer Authority
Risk and Insurance Management Office
PO Box 7066
San Juan, Puerto Rico 00916-7066

Principal Insurance Officer:
Mrs. Anelle Ramos Reyes
Phone: (787) 620-2277, ext. 2090, 2083, 2085
Fax: (787) 620-3799
Email: anelle.ramos@acueductospr.com

B. OCIP Insurance Broker and Program Advisors

Aon Risk Solutions of Puerto Rico, Inc.
PO Box 191229
San Juan, PR 00919-1229

Program Administrator:
Rafael A. Diaz Mercado, CPCU, AU, CIC, AAI, AINS
Manager – Broking Unit
Aon Risk Solutions of Puerto Rico, Inc.
Phone: 787-282-4804
Mobile: 787-6712625
Fax: 787-282-4956
Email: rafael.diaz@aon.com

Program Coordinator:
Karla Ruiz Cofresí, CIC, CISR
Manager – Government Accounts Unit
Aon Risk Solutions of Puerto Rico, Inc.
Phone: 787-282-4831
Mobile: 787-409-4233
Fax: 787-282-4886
Email: karla.ruiz.cofresi@aon.com

Program Advisor:
José Roque
Vice President – Property & Casualty
Aon Risk Solutions of Puerto Rico, Inc.
Phone: 787-282-4987
Mobile: 787-461-2398
Fax: 787-282-4953
Email: jose.roque@aon.com

DEFINITIONS

1. **Certificate of Insurance** - Written evidence of the existence of a particular insurance policy.

2. **Eligible Participants** - Includes all contractors, subcontractors providing direct labor on the project site in PRASA multi-year Capital Improvement Program (CIP). Temporary labor services and employee leasing companies are to be treated as a subcontractor.

3. **Ineligible Participants** - Includes (but are not limited to) suppliers, vendors and material/suppliers dealers (that do not perform or subcontract the installation at the site), guard services, truckers (including trucking to the project where delivery is the only scope of the work perform). Any person or organization that fabricates or manufactures products, materials or supplies away from the project site(s).

4. **Insured -** Puerto Rico Aqueduct and Sewer Authority, Contractor and Subcontractors of any tier who are properly enrolled in the OCIP and who have been named in a policy, certificate of insurance, or evidence of insurance signed by a duly authorized representative of the Insurers.

5. **OCIP Insurance Companies**
   a. Ace Insurance Company (Contractors Pollution Liability, Primary and Excess General Liability Coverage, Builder's Risk)

6. **OCIP Administrator** - Puerto Rico Aqueduct and Sewer Authority
   Risk and Insurance Management Office
   PO Box 7066
   San Juan, PR 00916-7066

7. **Owner-Controlled Insurance Program (OCIP) -** An insurance program under which Commercial General Liability, Excess General Liability, Builder's Risk, and Contractors Pollution Liability coverage's are procured or provided on a project "wrap-up" basis for contractor/subcontractors(s) of any tier, who have been properly enrolled, while performing operations at the Project Site.

8. **Participant -** An individual, firm, partnership, corporation, or any other legal entity that has contractual obligation with PRASA or any Contractor, or Subcontractor of any tier to perform some part of the Work required for completion of the Project, or whose principals or employees are actively performing such Work at the Project Site. To become enrolled as a Participant in the OCIP, such individual, firm, or corporation must complete all forms contained within the OCIP manual, which is incorporated into the Contract Documents as an attachment, and receive certificates of insurance from PRASA evidencing completion of such enrollment and acceptance as a Participant into the OCIP.

9. **Program Management Consortium (PMC) -** The firm contracted by PRASA to provide architectural, engineering, and other professional services in the implementation of the Capital Improvement Program.

10. **Work -** Supervision, labor, material, equipment, services, and incidental duties necessary to complete an individual item and the entire Contract at the Project Site and the carrying out of any duties and obligations imposed on the Participant by the Contract.

11. **Project Site -** That area described in the construction contract documents including the area available for contractor operations, access routes, right-of ways, and approved additional sites necessary or incidental thereto in connection with the services at or emanating from the project site.

SUMMARY OF COVERAGES

Project Provided Coverages

Puerto Rico Aqueduct and Sewer Authority (PRASA), has implemented an Owner Controlled Insurance Program (OCIP) to furnish certain insurance coverages as respects to on-site activities and properly enrolled contractors and subcontractors of any tier. The OCIP will be only for the benefit of PRASA and its Contractors/Subcontractor(s) of all tiers who have been properly enrolled in the OCIP program. Such coverage applies only to work performed under the agreement at the Project Site. All approved participants must have their own insurance for off-site activities.

The OCIP policies are available for review by the Contractor upon request to PRASA. The terms of such policies or programs may be amended from time to time. The Contractor hereby agrees to be bound by the terms of coverage as contained in such insurance policies and/or self-insurance programs and acknowledge that such policies prevail over any contradictory terms of the Supplemental General Conditions.

While the OCIP is intended to provide broad coverage and high limits, the OCIP is not intended to meet all the insurance needs of a Contractor/Subcontractor.

Therefore, we recommend that each Contractor/Subcontractor discuss the coverage provided by the OCIP with their insurance broker or consultant to assure that other proper coverages are maintained.

OCIP PROVIDED COVERAGES

PRASA will provide and maintain in force the types of insurance as listed below including the assumption of any deductible obligation where applicable. Contractor and Subcontractors of all tiers enrolled in the OCIP agree that the insurance company policy limits of liability, coverage terms, and conditions shall determine the scope of coverage provided by the OCIP. Contractor and Subcontractors of all tiers agree that the purpose of this section is to provide a general understanding of the coverage provided by the OCIP.

The OCIP does not cover suppliers, vendors, materials dealers, haulers, and transporters whose work location is off the Project Site, and/or who merely deliver and/or remove materials, equipment, or supplies to the Project Site. However, should such suppliers, vendors, manufacturers or materials dealers install their product on the Project Site, or contract with Participants to install their product in the Project Site; they will be covered by the OCIP. The OCIP does not include fabrication, manufacturing, or other operations of a Participant at a location away from the Project Site.

I. Commercial General Liability - Provides coverage for Bodily Injury, Property Damages, Personal Injury, Products and Completed Operations, and Employer's Liability Coverage, for On-Site Project Activities. The policy is written on an "occurrence" form and includes a five year completed operations period.

Scope of Coverage

A. Covered Operations - The performance of the work in conjunction with PRASA'S OCIP Insured Projects by an enrolled contractors, and subcontractors of any tier performed at the Project Site.

B. Insureds - PRASA, enrolled Contractor, and enrolled Sub-contractor of all tiers.

C. Limits

- $1,000,000 Each Occurrence / Bodily Injury & Property Damage
- $1,000,000 Personal Injury & Advertising Injury
- $2,000,000 General Aggregate
- $2,000,000 Products and Completed Operations Aggregate

- $250,000 Premises Rented to you
- $5,000 Medical Expense

D. Special Condition – Five (5) years extension in completed operations coverage.
-**Designated Projects Endorsements**

E. Contractors / Sub-Contractors Assessment - Each Contractor agrees that, in case of payment by PRASA on account of injury or damage claims arising out of the performance of the Work will be responsible for a **$5,000** General Liability Obligation per Occurrence for each claim. This is subject to change pending any formal changes to the constructions agreement.

II. Employers' Stop-Gap Liability (Limits)

- $2,000,000 Bodily Injury by Accident, each Accident
- $2,000,000 Bodily Injury by Disease, each Disease
- $2,000,000 Bodily Injury by Disease, Policy Limit

III. Excess General Liability Insurance – Provides Liability coverage in excess Primary Commercial General Liability Coverage for On-Site Project Activities. The policies are written on an "occurrence" form basis.

Scope of Coverage

A. Operations - The performance of the work in conjunction with PRASA's OCIP Insured Projects by an enrolled Contractor, and Subcontractor of any tier performed at the Project Site.

B. Insured - PRASA, enrolled Contractor and enrolled Sub contractor of all tiers.

C. Limits

- Excess Liability:
  - $25,000,000 Each Occurrence
  - $25,000,000 Policy Aggregate, Excess $1,000,000 / $2,000,000 Primary Layer
  - Self-Insured Retention of $10,000

IV. Contractor's Pollution Liability - Provide coverage for Bodily Injury, Property Damage or Environmental Damage claims from third parties caused by pollution conditions resulting from covered operations. The policy is written on an "occurrence" form and includes a five year completed operations period.

Scope of Coverage

A. Operations - All construction activities of an enrolled contractor, subcontractor or consultant of any tier performed at the project site in connection with PRASA's OCIP construction projects.

B. Insured – Contracted construction management teams, program management consortiums, contractors, subcontractors, remediation and environmental contractors, and consultants, sub consultants and subcontractors of all tiers providing services in connection with projects covered under PRASA's OCIP.

C. Limits

- $20,000,000 Per Occurrence Limit
- $20,000,000 Aggregate Limit
- Self-Insured Retention of $25,000

V. Builder's Risk / Installation Floater – Provides coverage under an "all risks" form (including flood and earthquake) for physical loss or damage to work or any part thereof.

Scope of Coverage

A. Operations - Work done in conjunction with PRASA's OCIP by enrolled Contractors and sub-contractors of any tier.

B. Insured – PRASA and Contractors / Subcontractors of any tier.

C. Limits

- $30,000,000 Per occurrence and in annual policy aggregate
- $30,000,000 Maximum Value Per Insured Project

D. Sub limits

- $1,000,000 or 10% of the loss for Professional Fees whichever is less- any one occurrence
- $1,000,000 physical loss of or damage to insured property in Transit anyone conveyance
- $1,000,000 each and every loss in the annual aggregate for Principal's Existing Property
- $2,000,000 Physical loss of or damage to insured Property in Off-Site Storage – anyone storage location
- $2,000,000 or 25% of the physical loss of or damage to insured property in any occurrence, whichever is less - Expediting Expense

- $250,000 Fire Brigade Charges / Extinguishing Expenses; any one occurrence
- $5,000,000 or 25% of the amount of insured physical loss of or damage to insured property in anyone occurrence, whichever is less - Debris Removal
- $250,000 Physical Damage to Plans, Blueprints, Drawings or other contract documents

E. Builder's Risk / Installation Floater Assessment

- $10,000 physical loss of or damage to property insured anyone occurrence, except: as respect water damage other than flood
- $100,000 in respect of the Principal's Existing Property
- $100,000 in respect of property insured while undergoing Testing and Commissioning
- $100,000 in respect Damaged to Existing Property

DEDUCTIBLE RESPONSIBILITY WILL BE ASSESED TO THE RESPONSIBLE CONTRACTOR(S) BASED UPON THE INSURANCE CARRIER'S INVESTIGATION OF THE FACTS AND THEIR APPORTIONMENT OF LIABILITY.

CONTRACTORS ARE ADVISED TO ARRANGE THEIR OWN INSURANCE COVERAGE FOR CONTRACTOR OWNED EQUIPMENT AND MATERIALS NOT INTENDED TO BECOME PART OF THE PROJECT. THE OCIP WILL NOT COVER CONTRACTOR OWNED PROPERTY.

The Builders Risk will not provide coverage for any loss:

(1) to horizontal directional drilling, pipe jacking, micro tunneling (except as specifically endorsed in the policy),
(2) underground works (other than laying pipelines and construction of underground collector system)
(3) to materials (unless the materials are to be incorporated into the Project);
(4) tools, or
(5) equipment of the Contractor or any tier of Subcontractor, or any other person furnishing labor or materials for the Work. Contractor agrees to indemnify, defend, and hold PRASA and its officers, agents, and employees harmless from any such loss, theft, or disappearance.

VI. Certificates and Policies – All the PRASA furnished insurance coverages shall be either written by insurance companies approved by PRASA or shall be self-insured. PRASA or its appointed representative shall provide Contractors and Subcontractors with appropriate certificates of insurance or self-insurance evidencing the coverage outlined above.

VII. Termination/Modification of the OCIP – PRASA reserves the right to terminate any participant from the OCIP, and to terminate or modify the OCIP, or any portion thereof. To exercise this right, PRASA shall provide ninety-(90) days

advance written notice to all participants covered by the OCIP. The Contractor and all participants of all tiers shall immediately be required to obtain appropriate replacement insurance coverage acceptable to PRASA. The total reasonable cost of such replacement insurance will be reimbursed by PRASA. Written evidence of such insurance shall be provided to PRASA prior to the effective date of the termination or modification of the OCIP.

VIII. Assignment of Return Premiums - PRASA will be responsible for the payment of all premiums associated solely with the OCIP and will be the sole recipient of any dividend(s) and/or return premium(s) generated by the OCIP. In consideration of PRASA's provision of said coverages by signing this contract, the Contractor agrees to:

Irrevocably assign to and for the benefit of PRASA, all return premiums, premium refunds, premium discounts, dividends, retentions, credits, and any other monies due to PRASA in connection with the insurance which PRASA herein agrees to provide. The Awarded Contractor further agrees to require each sub-contractor of all tiers to execute a similar assignment for the benefit of PRASA.

IX. No Release - The carrying of the above-described insurance shall in no way be interpreted as relieving the Contractor of any other responsibility or liability under this agreement, the OCIP policies or any applicable law, statute, regulation or order.

X. Waiver of Subrogation - Contractor waives all rights of subrogation and recovery against PRASA, its designee(s), Program Manager Consortium, Construction Managers, General Contractors and subcontractor(s) of all tiers to the extent of any loss or damage, which is insured under the OCIP. Contractor waives its rights of subrogation and recovery for damage to any property or equipment against PRASA, its designee(s), Program Manager Consortium, Construction Managers, General Contractors and subcontractor(s) of all tiers. Contractor shall require all subcontractor(s) to similarly waive their rights of subrogation and recovery in each of their respective construction contracts with respect to their work.

CONTRACTOR/SUBCONTRACTOR PROVIDED INSURANCE COVERAGES

For any work under this contract, and until substantial completion and final acceptance of the work, the Contractor, at its own expense, must promptly furnish to PRASA's OCIP Administrator, certificates of insurance giving evidence that certain coverages are in force. The Contractor is responsible for compliance with these requirements by its subcontractors of all tiers.

Upon receipt of notice to proceed, the Contractor agrees and shall cause its subcontractor of all tiers to agree to obtain the insurance set out below from a company or companies acceptable to PRASA as follows:

I. Workmen's Compensation Insurance

A. The Contractor shall provide Workmen's Compensation Insurance as required by the Workmen's Compensation Act of the Commonwealth of Puerto Rico. The Contractor shall also be responsible for compliance with said Workmen's Compensation Act by all its sub-contractors.

B. The Contractor shall furnish PRASA a certificate from the State Insurance Fund showing that all personnel employed in the work are covered. If imported technical personnel are exempted, the Contractor shall furnish evidence of such exemption and certificate from the insurance carrier covering said personnel.

C. For imported personnel eligible for exemption, as per Act. No. 16 of May 16, 1958, the Contractor shall refer to Appendix "A".

II. Comprehensive Automobile Liability Insurance

A. The Contractor agrees, and shall cause its sub-contractors of all tiers to agree, to provide, at their own expense, Automobile Liability Insurance for claims arising from the ownership, maintenance, or use of a motor vehicle at, upon, or away from the Project Site. The insurance shall cover all owned, non-owned, and hired automobiles used in connection with the work, with the following minimum limits of liability:

$1,000,000 Combined Single Limit Bodily Injury and Property Damage per Occurrence

B. The certificate evidencing this coverage shall state that the policy has been endorsed to name PRASA as an Additional Insured.

C. Notice of Cancellation - Policies and/or certificates shall specifically provide a 60-day notice of cancellation, non-renewal or material change to be sent to the OCIP Administrator at the aforementioned address, as a condition for such cancellation, non-renewal or material change to take place.

D. If there is the exposure of transportation of hazardous materials the following endorsement shall be provided. Under this policy, Motor Carrier Endorsement, of the Motor Carrier Act of 1980, Form MCS-90, shall be provided by the Contractor.

III. Proposal Guarantee - Unless otherwise stated in the Bid Documents, proposals must be accompanied by a Proposal Guarantee in an amount equal to five (5%) percent of the proposal and complying with the requirements for bonds in Section IV and Section VII. If the proposal guarantee is a bid bond, an original and four (4) copies of the bid bond must be submitted, duly completed and signed, using the forms provided by PRASA in the Bid Documents. The bid bond shall remain effective for at least one-hundred eighty (180) days after the bid opening date or for greater time, if so specified in the Bid Documents.

If the Proposal Guarantee is a certified check it will be retained to pay for any damage or loss to PRASA in case the successful Bidder shall neglect or refuse to enter into a contract in accordance with the proposal.

The bid bond must be accompanied by the
A. “Power of Attorney”,
B. Acknowledgement of Surety,
C. Copy of license issued by the Office of the Insurance Commissioner of Puerto Rico, and the bond shall be duly classified as in Section J

IV. Bonds - Unless otherwise stated in the Contract Documents, the Contractor must, within ten (10) calendar days from the date of Notice of Award, furnish and file with the Owner, in form satisfactory to, and with Sureties approved by the Owner, the following:

A. A Performance Bond in the amount of one hundred percent (100%) of the contract price, with good and sufficient surety satisfactory to PRASA guaranteeing that the Contractor will well and faithfully perform the contract work within the time specified.

B. A Payment Bond in the amount of one hundred percent (100%) of the contract price, with good and sufficient surety satisfactory to PRASA to guarantee the prompt payment of all labor, supervision, equipment and materials required in the performance of the work.

C. A separate and additional Payment Bond in an amount equal to 20% of the Contract Price, payable to the Secretary of Puerto Rico to guarantee payment to laborers and employees of Contractor as required by Act No. 111, approved June 22, 1961.

D. All bonds shall be presented to PRASA before commencement of any work and shall be executed in the required official form of PRASA.

E. All bonds submitted by Bidder/Contractor shall be accompanied with the following documents:
   1. "Power of Attorney",
   2. Acknowledgement of Surety,
   3. Copy of license issued by the Office of the Insurance Commissioner of Puerto Rico.

F. Contractor shall also furnish such other Bonds as are required by the Contract Documents.

G. The Payment and Performance Bond shall remain in effect as follows:

   1. Under the Performance Bond: one (1) year after the date when the final payment becomes due for warranty work, as stipulated in the warranty clause, or as provided otherwise by the Laws or Regulations or by the Contract Documents.

   2. Under the Payment Bond: six (6) months after the retainage is paid in full to the Contractor, except as provided otherwise by the Laws or Regulations or by the Contract Documents.

H. If the Surety on any Bond furnished by Contractor is declared bankrupt or becomes insolvent or its right to do business is terminated in any state where any part of the Project is located or it ceases to meet the requirements of the Puerto Rico's Insurance Commissioner, Contractor shall within ninety (90) days thereafter substitute said Bond and Surety with acceptable substitutes.

I. Bonds can be furnished in cash, coin of the United States of America, by certified check payable to Owner, by manager's check from a bank, money order from a bank or from the post office, or non-revocable letter of credit.

J. Bonds can also be issued by a bonding company classified according to the following classification scales included in the "Best Key Rating Guide". The Best Rating Guide is based on quantitative and qualitative evaluation of the insurance companies in terms of economic solvency, operating performance and business profile. Insurance Companies classification should be as follows:

A++ and A+ …… Superior

OR

A and A- …….. Excellent

According to the above classifications reinsurance will be accepted of at least 90% in the Best Key Rating Guide and authorized to do business in Puerto Rico by the Insurance Commissioner office. If they are not authorized, they will need previous permit from the Insurance Commissioner.

Independent insurance companies, notwithstanding if they are or not classified by the "'Best Insurance Report", will not be accepted if they are subject to some immediate regulatory action and in accordance with the National Association of Insurance Commissioners, or that are subject of an impairment order issued by the Insurance Commissioner. The insurance companies will authorize PRASA to obtain from the Insurance Commissioner's Office the necessary information on said actions and on any impairment order that has been issued. They will also authorize PRASA to obtain direct confirmation from the insurers.

These bonds must be issued by a Surety listed in the US Treasury Department latest edition of circular 570 and authorized to transact business in the Commonwealth of PR.

V. Other Requirements

A. The insurance policies and bonds required herein shall be obtained from insurance and surety companies complying with the requirements of Puerto Rico's Insurance Commissioner.

B. The Contractor shall, throughout the performance of the Work under the Contract Documents and until the Final Acceptance of the Project, maintain current, and in effect all the required insurance policies and bonds.

C. Insurance coverage in the minimum amounts set forth herein shall not be construed to relieve the Contractor of liability in excess of such coverage. Contractor must give sixty (60) calendar days written notice before any policy coverage is changed, canceled or non-renewed.

The Owner reserves the right to require any changes of insurance or coverage which considers necessary, revise policies renewals in this contract,

and to adapt insurance requirements to needs arising during the contracting process.

VI. **Certificates of Insurance -** Upon receipt of notice to proceed, the Contractor agrees, and shall cause its sub-contractors of all tiers to agree, to provide PRASA's OCIP Administrator a Certificate of Insurance setting out the coverages described herein, limits, and amendments to the certificate necessitated by changes to the work to be performed under the contract until completion and final acceptance of work. Insurances must be placed with carriers having an A.M. Best's Guide rating of A- VII or better. Such certificate shall be forwarded to the OCIP Administrator at the address described in this manual.

VII. Furnishing of Policies and Bonds.

A. All required policies of insurance and bonds shall be in a form acceptable to the PRASA, and shall be issued only by insurance companies authorized to do business in Puerto Rico and duly licensed as applicable under the Insurance Code of Puerto Rico.

B. The Contractor shall furnish the original and one certified copy of each required bond duly signed by an Attorney in Fact and countersigned by an authorized representative.

C. The Contractor shall furnish a complete copy of each policy required under this agreement, or a certificate of insurance signed by an authorized representative of the insurer in Puerto Rico, describing the coverages afforded. This certification shall be in an "Accord" form, in general use by the insurers.

VIII. Other Insurance - Any type of insurance or any increase of limits of liability not described above which a Contractor requires for its own protection or on account of any statute shall be its own responsibility and its own expense.

The OCIP is not an attempt to provide the Contractor and its sub-contractors of all tiers with complete insurance programs. PRASA shall not be responsible to provide any insurance coverage not specified above. The Contractor and its Sub-contractor of all tiers have the responsibility to make sure their insurance programs fit their particular needs, and it is their responsibility to arrange for and secure any insurance coverage, which they deem advisable, whether or not specified above. PRASA reserves its right to require any changes of insurance or coverage which considers necessary in this contract and to adapt insurance requirements to needs arising during the contracting process.

CONTRACTOR/SUB-CONTRACTOR RESPONSIBILITIES

The Contractor for itself and on behalf of its enrolled sub-contractors is required to cooperate with PRASA and its OCIP Administrator with regards to the administration and operation of the OCIP. The Contractors responsibilities shall include, but are not limited to:

I. Compliance with applicable Construction Safety Program(s);

II. Compliance with applicable Laws, Statute or Regulation and PRASA's OCIP and Safety Manuals, setting forth the administrative procedures required of the Contractors;

III. Provision(s) of necessary contract, operations and insurance information;

IV. Immediately notifying the OCIP Administrator as soon as practicable of all subcontractors of all tiers upon award;

V. Cooperation with any insurance company and OCIP Administrator with respect to requests for claims or other information required under the program;

VI. Immediately notifying PRASA that any Contractor/Sub-contractor-provided coverage has been canceled, materially changed, or not been renewed;

VII. Complete the following administrative forms within the time frames specified:

A. PRASA OCIP Form 1 - OCIP Enrollment Form. Upon receipt of award notice from PRASA.

B. PRASA OCIP Form 2 - Notice of Substantial Completion. Upon completion of all work being performed under the contract.

C. PRASA OCIP Form 6 – Safety Compliance Checklist. Upon receipt of notice to proceed from PRASA.

VIII. Ensure that all eligible participants of all tiers complete OCIP Form 1, OCIP Form 2 and OCIP Form 6.

IX. Completed forms will be sent to PRASA's OCIP Administrator at the following address:

Puerto Rico Aqueduct and Sewer Authority
Mrs. Anelle Ramos, Principal Insurance Officer
Risk and Insurance Management Office
PO Box 7066, San Juan, PR 00916-7066
Phone #: (787) 620-2277 ext. 2085, 2090
Fax #: (787) 993-9045

Failure to follow the procedures outlined in PRASA's OCIP and Safety and Health Manuals may result in fines being assessed by concerned regulatory agencies against the contractor. PRASA shall deduct from monies due or to become due under payments of this contract any applicable fines that are assessed against PRASA as well as any other legal remedies available to PRASA, which remedies may be cumulative.

ADMINISTRATION OF THE OCIP

Administration is an integral part of the success of the OCIP. The Contractor/ Subcontractor must be properly enrolled in the OCIP before access to the Project Site is allowed.

I. **Awarded Contractor** shall enroll in the OCIP by completing the attached OCIP Form 1 and submitting them to the OCIP Administrator **upon receipt of award notice from PRASA**. All awarding Contractors shall require that each of its subcontractors of all tiers enroll in the OCIP by submitting the OCIP Form 1 to the OCIP Administrator prior to the sub-contractor entering the project site.

II. **Sub-contractor Participation** - Upon execution of the contract, the Contractor will immediately report all new eligible Sub-contractors of all tiers to the OCIP Administrator for enrollment in the OCIP. The Contractor shall cause its Sub-contractors to cooperate fully with PRASA, and insurance companies for the project in the administration of the OCIP. The Contractor agrees to cooperate in the safety and accident prevention program and claim handling procedures as established for the project by PRASA. In accordance with this paragraph and subparagraphs, the Contractor shall not permit any sub-contractor of any tier to enter the Project Site prior to submitting enrollment forms in the PRASA's OCIP; failure to do so may negate the afforded coverage(s).

II. CLAIMS ADMINISTRATION

INTRODUCTION

This section provides the procedure in the event of a claim. It is important that PRASA's designated insurance company be immediately notified of any claim situation.

The OCIP is designed to provide certain coverage to PRASA and its Contractor/Subcontractors; however, the program does not change any of the Contractor/Subcontractor(s) contractual and/or statutory responsibilities for reporting claims.

CLAIMS DIRECTORY

A. Sponsor and OCIP Administrator

Puerto Rico Aqueduct and Sewer Authority
Risk and Insurance Management Office
PO Box 7066
San Juan, Puerto Rico 00916-7066

Principal Insurance Officer:
Mrs. Anelle Ramos Reyes
Phone: (787) 620-2277, ext. 2090, 2083, 2085
Fax: (787) 620-3799
Email: anelle.ramos@acueductospr.com

B. OCIP Insurance Broker and Program Advisors

Aon Risk Solutions of Puerto Rico, Inc.
PO Box 191229
San Juan, PR 00919-1229

Program Administrator:
Rafael A. Diaz Mercado, CPCU, AU, CIC, AAI, AINS
Manager – Broking Unit
Aon Risk Solutions of Puerto Rico, Inc.
Phone: 787-282-4804
Mobile: 787-6712625
Fax: 787-282-4956
Email: rafael.diaz@aon.com

Program Coordinator:
Karla Ruiz Cofresí, CIC, CISR
Manager – Government Accounts Unit
Aon Risk Solutions of Puerto Rico, Inc.
Phone: 787-282-4831
Mobile: 787-409-4233
Fax: 787-282-4886
Email: karla.ruiz.cofresi@aon.com

Program Advisor:
José Roque
Vice President – Property & Casualty
Aon Risk Solutions of Puerto Rico, Inc.
Phone: 787-282-4987
Mobile: 787-461-2398
Fax: 787-282-4953
Email: jose.roque@aon.com

C. Contractor's Pollution Liability, Builder's Risk, General Liability's and Excess Liability's Claims Adjusters,**:**

Ace Insurance Company
PO Box 191249
San Juan, PR 00919-1249

Claims Supervisor/Coordinator:
Maria Toledo
Phone (787)274-4746
Mobile (787) 579-0115
Fax 787)758-6989
Email: puertorico-firstnoticeofloss@ace-ina.com

Claims:

Brenda M Diaz
Phone (787) 274-4721
Mobile (787) 487-0017
Fax (787) 754-6613
Email www.brenda.diaz@acegroup.com

D. Emergency Telephone:

Fire and Ambulance Phone #: 911

CLAIMS PROCEDURES

I. **Bodily Injury or Property Damage Accident -** Immediately obtain any necessary medical emergency services. You must report all occurrences when any member(s) of the public is injured or their property is damaged. Complete the General Liability Report of Accident Form immediately (PRASA's OCIP General Liability Notice of Loss Form 3) and forward to the address indicated below.

II. **Loss or Damage to the Project under the Course of Construction -** When any physical loss or damage occurs to any part of the construction work, from whatever cause, complete the Property Loss Notice immediately following the incident (PRASA's OCIP Notice of Property Loss Form 4) and forward to the address indicated below.

III. **Bodily Injury, Property Damage or Environmental Damage Loss -** You must report all occurrences or possible claims by immediately notifying the OCIP Administrator of any known or suspected pollution incident. Complete the Pollution Liability Notice of Loss Form following the incident (PRASA's OCIP Form 5) and forward to the address indicated below.

Original to:
Aon Risk Solutions of Puerto Rico, Inc.
PO Box 191229
San Juan, PR 00919-1229
Attention: Mrs. Margarita Orellana, Claims Executive
Phone: 787-282-4841
Mobile: 787-552-8910
Email: maria.orellana@aon.com

One copy to:
Puerto Rico Aqueduct and Sewer Authority
Risk and Insurance Management Office
PO Box 7066
San Juan, Puerto Rico 00916-7066
Attention: Mrs. Anelle Ramos Reyes

Phone: (787) 620-2277, ext. 2090, 2083, 2085
Fax: (787) 620-3799
Email: anelle.ramos@acueductospr.com

LAWSUIT OR CITATION PROCEDURES

Upon receipt, the Contractor/Sub-contractor shall immediately notify by telephone of all lawsuits or citations filed against either PRASA or its Contractors/Sub-contractor(s) of any tier, related to work performed on the Project Site. All lawsuits or citations shall, upon date of receipt, be forwarded by certified mail to:

Original to:
Puerto Rico Aqueduct and Sewer Authority
Risk and Insurance Management Office
PO Box 7066
San Juan, Puerto Rico 00916-7066
Attention: Mrs. Anelle Ramos Reyes

Phone: (787) 620-2277, ext. 2090, 2083, 2085
Fax: (787) 620-3799
Email: anelle.ramos@acueductospr.com

One copy to:
Aon Risk Solutions of Puerto Rico, Inc.
PO Box 191229
San Juan, PR 00919-1229
Attention: Isabel Smith, JD, CISR - Claims Executive Legal
Phone: 787-282-4827
Mobile: 787-525-9773
Fax: 787-282-4953
Email: isabel.smith@aon.com

III. SAFETY/LOSS CONTROL PROCEDURES

SAFETY/LOSS CONTROL PROCEDURES

I. Safety Statement - Incidents, injuries and damage to property can be controlled and prevented. Safety is the responsibility of each Participant and each of their employees. PRASA's objective under the OCIP is to work together with Participants and industry partners to continuously improve safety performance for all construction workers, the general public, and for the work under the course of construction. Every effort will therefore be made to maintain the Project Site free from recognizable hazards.

PRASA's Program Manager Consortium will monitor the Participants' Safety and Loss Control Programs, and will be assisted by the Loss Control Consultants from the OCIP Insurance Company and Aon Risk Solutions of Puerto Rico, Inc. Their services are provided as additional resources to PRASA and to the Participants in the spirit of partnership.

II. Documents to be submitted by the Contractor (with OCIP Form 6), before commencement of work:

A. The Contractor shall comply with the following minimum requirements of a health and safety program:
   1. The contractor shall have its own loss control program.
   2. It shall include an accident or incident investigation procedure.
   3. It will describe procedures for compliance with requirements of all applicable regulations included in the 29 CFR. The Program latest revision date shall not be greater than a year from the projects commencement date.
   4. The Program shall be approved by PRASA.

B. The Contractor shall submit, for evaluation by the PRASA Safety Office, a copy of a Site Specific Work Plan, which shall include the procedures to be followed during the project to achieve compliance with the applicable standards and regulations. These standards and regulations include, but are not limited to:
   1. Occupational Exposure to Lead (29 CFR 1926.62)
   2. Scaffolds (29 CFR 1926 Subpart L)
   3. Confined Spaces (29 CFR 1910.146)
   4. Occupational Exposure to Noise (29 CFR 1910.95)
   5. Hazardous Materials (29 CFR 1910 Subpart H)
   6. Personal Protective Equipment (29 CFR Subpart I)
   7. Hazard Communication (29 CFR 1910.1200)
   8. HAZWOPER (29 CFR 1910.120)
   9. Fire Protection (29 CFR 1910 Subpart L)

10. Commercial Diving (29 CFR 1910 Subpart T)
11. Respiratory Protection (29 CFR 1910.134)
12. Fall Protection (29 CFR Subpart M)
13. Electrical (29 CFR 1926 Subpart K)
14. Welding (29 CFR 1926 Subpart K)
15. Excavations (29 CFR 1926 Subpart P)
16. Demolitions (29CFR 1926 Subpart T)
17. Blasting & Explosives (29 CFR 1926 Subpart U)
18. Tools, Hand and Power (1926 Subpart I)
19. Electric Industry (29 CFR 1910.269)
20. Lockout/Tag out (29 CFR 1910.147)
21. Asbestos (20 CFR 1910.1001)
22. Any other regulation or guideline applicable to the scope of work

C. The Plan shall include contingency procedures that include how to proceed in an emergency situation, during an accident, in case of an atmospheric disturbance, in case of fire.

D. Copy of all training certificates, licenses or certifications required, according to the scope of work. For example: pesticide applicator, electrician, spill responder, refrigeration technician, DOT training for hazardous substances, etc.

E. Copy of the Material Safety Data Sheets (MSDS) of all chemical products to be used during the project, for evaluation and approval by PRASA.

F. Certification of compliance with medical surveillance requirements, according to scope of work. For example: respiratory protection, asbestos, lead, etc.

G. Certification of compliance with Fit Test requirements.

III. Special Safety Conditions, as needed:

A. Services including the application of chemical products within closed spaces, like buildings, will be offered according to PRASA's conditions. The Contractor will take all steps necessary to assure the area will be free of nuisance odors or vapors before PRASA personnel is to reoccupy. All these will be done in coordination with the local supervisor of PRASA. Services in exterior parts of PRASA can be done during regular working ours.

B. The Contractor shall assure that all wastes are removed and properly disposed of, in accordance with all applicable laws and regulations, after completion of work.

C. Welding operations will comply with the requirements of OSHA, ANSI and NFPA.

D. If the project involves the handling of non-asbestos insulation or other dust generating materials, like gypsum board, steps shall be taken to prevent the release of the dust to adjacent areas.

E. The Contractor shall comply with all applicable laws, ordinances, rules, regulations and lawful orders of any public authority having jurisdiction for the safety of persons or property or to protect them from damage, injury or loss. The Contractor shall erect and maintain, as required by existing conditions and progress of the work, all reasonable safeguards for safety and protection, including posting danger signs and other warnings against hazards, promulgating safety regulations and notifying owners and users of adjacent utilities.

F. The Contractors shall designate a responsible member of his organization at the site whose duty shall be the prevention of accidents, who shall develop and coordinate with the PRASA Safety Officer.

G. Compliance with all safety provisions by subcontractors shall be the responsibility of the Contractor.

H. Contractor agrees that it shall perform all work in compliance with federal, state and local occupational safety and health regulations, including but not limiting to hazard communication, and right-to-know laws. In addition, the Contractor agrees to observe the compliance of all precautions stated upon the applicable materials safety data sheets and container labels of all chemicals used in the contracted work.

I. Contractor will obtain and maintain, during the duration of the contract, the proper permits from all federal, state and local regulatory authorities or other applicable government agency with respect to discharge, disposal, use, storage, handling and transportation of hazardous chemicals and substances as and when applicable law or regulation requires. For projects including the handling of asbestos, lead, or spilled hazardous substances, the notification to EPA or the EQB will be done by the Contractor, but in coordination with the PRASA Safety Officer.

J. Contractor will not cause or permit any hazardous chemical or product containing a hazardous to be at, or in the vicinity of, any place where any employee, agent, or contractor of Puerto Rico Aqueduct and Sewer Authority, or any employee of any such agent or Contractor, may be at risk or exposed to hazard as a result thereof during normal use or any foreseeable emergency.

K. Contractor will defend, indemnify and hold harmless, Puerto Rico Aqueduct and Sewer Authority, its employees, agents or assigns for any and all liabilities and expenses arising out of Contractor noncompliance with clauses numbered I, II and III, above, irrespective of any other terms of this agreement.

L. Puerto Rico Aqueduct and Sewer Authority may unilaterally terminate this contract upon Contractor's nonobservance of any of the foregoing or for any failure to comply with any of the provisions of the Contract upon thirty (30) days of a written notice to Contractor.

IV. CONSENT FORM

CONSENT FORM

I have read and understand the information provided in the Owner-Controlled Insurance Program Manual.

Signature: _____

Print Name: _____

Title: _____

Company Name: _____

Date: _____

Please complete and return to:

Mrs. Anelle Ramos
Principal Insurance Officer and OCIP Administrator
Risk and Insurance Management Office
Puerto Rico Aqueduct and Sewer Authority
PO Box 7066
San Juan, PR 00916-7066,
Tel. (787) 620-2277 / Fax (787) 993-9045.

<u>This form must be received prior to starting work on the Project.</u>

V. OCIP FORMS

PMC:	CONTRACT:

PRASA OCIP FORM 1

PUERTO RICO AQUEDUCT & SEWER AUTHORITY
OCIP ENROLLMENT FORM

Your Company Name:		
Contact Name:		
Physical Address:		
Mailing Address:		
City:	State:	Zip-code:
Tel. #:	Cellular #:	
Fax #:	Pager #:	
E-Mail Address:	Federal ID #:	

Contract Information		
Who awarded your contract:	General Contractor:	
Project Name:		
Site Contact :	Tel.:	
Safety Contact:	Tel.:	
Type of work to be done:		
Start Date:	Termination Date:	Contract Amount: $

Expected Use of Subcontractors

Company Name & Address	**Contact Person**	**Telephone No.**	**Start Date**

This enrollment form must be received prior to starting work on the Project at the OCIP Administrator's Office:

Puerto Rico Aqueduct & Sewer Authority
Risk & Insurance Management Office
PO Box 7066
San Juan, PR 00916-7066
Tel. (787) 620-2277 Fax (787) 993-9045

SIGNED BY: _____ DATE: _____

PMC:	CONTRACT:

PRASA OCIP FORM 2

PUERTO RICO AQUEDUCT & SEWER AUTHORITY
OCIP NOTICE OF COMPLETION FORM

Please be advice, we are scheduled to complete our work for:

Job Name/Description: _____

_____

Completion Date: _____ Awarded by: _____ Prime Contractor: _____

Final Contract
Price: _____

We used the following subcontractors who will also complete their work on the date shown above:

_____
_____
_____
_____
_____

_____ This is our only contract for PRASA

_____ We are still working on the following jobs for PRASA

Awarded by	Job Name/Description	Prime (If any)

Your company's Name: _____

By: _____ Title: _____

This form must be sent to the following address:

Puerto Rico Aqueduct & Sewer Authority
Risk & Insurance Management Office
PO Box 7066
San Juan, PR 00919-7066
Tel. (787) 620-2277
Fax. (787) 993-9045

PMC:	CONTRACT:

PRASA OCIP FORM 3

PUERTO RICO AQUEDUCT & SEWER AUTHORITY
GENERAL LIABILITY NOTICE OF LOSS

DATE: _____

INSURED – NAME AND ADDRESS:	TELEPHONE NO: _____ FAX NO: _____ REPORTED BY: _____

DATE AND TIME OF LOSS:	
LOCATION:	
DESCRIPTION OF THE LOSS:	
NAME AND ADDRESS (INJURED/OWNER): TEL.#: _____ FAX #: _____	INJURED/DAMAGED PROPERTY:
DESCRIPTION OF INJURIES: FATAL	DESCRIPTION OF DAMAGES TO PROPERTY: ESTIMATE OF THE REPAIRS:
WITNESSES/NAME, ADDRESS AND TELEPHONE:	
COMMENTS:	
REPORTED TO:	

PMC:	CONTRACT:

PRASA OCIP FORM 4

PUERTO RICO AQUEDUCT & SEWER AUTHORITY
NOTICE OF BUILDERS RISK/PROPERTY LOSS

DATE: _____

INSURED - NAME & ADDRESS:	**TELEPHONE NO:** _____ **FAX NO:** _____ **REPORTED BY:** _____

DATE & TIME OF THE PROPERTY LOSS:
PLACE OF LOSS:
CONTACT PERSON: **NAME, ADDRESS & TELEPHONE NO.:**
TYPE & DESCRIPTION OF THE LOSS:
ESTIMATE OF THE REPAIRS OR REPLACEMENTS:
COMMENTS:
REPORTED TO:

PMC:	CONTRACT:

PRASA OCIP FORM 5

PUERTO RICO AQUEDUCT & SEWER AUTHORITY
NOTICE OF POLLUTION INCIDENT

DATE: _____

INSURED – NAME AND ADDRESS:	TELEPHONE NO: _____ FAX NO: _____ REPORTED BY: _____

DATE AND TIME OF LOSS:	
LOCATION:	
DESCRIPTION OF THE LOSS:	
NAME AND ADDRESS (INJURED/OWNER): TEL.#: _____ FAX #: _____	INJURED/DAMAGED PROPERTY:
DESCRIPTION OF INJURIES: FATAL	DESCRIPTION OF DAMAGES TO PROPERTY: ESTIMATE OF THE REPAIRS:
WITNESSES/NAME, ADDRESS AND TELEPHONE:	
COMMENTS:	
REPORTED TO:	

PMC:	CONTRACT:

PRASA OCIP FORM 6

PUERTO RICO AQUEDUCT & SEWER AUTHORITY
SAFETY COMPLIANCE CHECK LIST

Your Company Name:		
Physical Address:		
Mailing Address:		
City:	State:	Zip Code
Tel #:	Fax #:	

Project Information

Project Name and Brief Description:		
Your Company Site Contact Person For This Project:	Tel #:	
Your Company Safety Contact Person For This Project:	Tel #:	
Start Date:	End Date:	Emergency Tel #:

Check List Of Documents To Be Submitted To PRASA Infrastructure Office:
(Please, attach any documents that have not been evaluated within the past year by PRASA Infrastructure Office)

_____ Safety Program	_____ Training Certificates and Licenses Needed	_____ Coordination Meeting Scheduled
_____ Site Specific Work Plan	_____ List of Chemicals to be used in the Project	(Please, include date, time and place.)
_____ Material Safety Data Sheet (MSDS) for each Chemical on the Previous List		
_____ Name any Specific Safety Coordination Needed to Perform the Project		

Expected Use of Subcontractors:

Company Name	Brief Description of Work	Anticipated Start Date at Project Site

This compliance form must be received fully filled by the OCIP Safety Manager prior to starting work.
Please, send to:
Puerto Rico Aqueduct & Sewer Authority
Infrastructure Department
P.O. Box 7066, San Juan, PR 00916-7066
Tel. (787) 999-1717, Fax: (787) 999-1775

Signed by: _____ Date: _____

SUPPLEMENT TO GENERAL CONDITIONS OF THE

PUERTO RICO AQUEDUCT & SEWER AUTHORITY

OWNER CONTROLLED INSURANCE PROGRAM

AND

OTHER INSURANCE AND BOND REQUIREMENTS

FOR CONTRACTORS AND SUBCONTRACTORS

Prepared By:

The Risk Management and Insurance Office of the
Puerto Rico Aqueduct & Sewer Authority and
Aon Risk Solutions of PR, Inc.

TABLE OF CONTENTS

I.	Introduction	3
II.	Program Eligibility	3
III.	Contractor's Responsibility	4
IV.	Contractor's Responsibility for its Subcontractors	5
V.	Coverage Provided in PRASA's OCIP	5
VI.	Assignment of Premiums	9
VII.	Contractor's Provided Coverage	9
VIII	Other Insurance	14
IX.	Subcontractor Participation	14
X.	Waiver of Subrogation	14
XI.	No Release	15
XII.	Approval of Forms and Companies	15
XIII.	OCIP Program Manuals and Claims Procedures	15
XIV.	Owner Controlled Insurance Program	15
XV.	PRASA Owner Controlled Insurance Program -Safety Overview	16
XVI.	OCIP Forms	18

I. Introduction

The Puerto Rico Aqueduct & Sewer Authority (PRASA) has implemented an Owner Controlled Insurance Program (OCIP). The awarded Contractor must enroll in the OCIP and complete the required forms included with these Supplemental General Conditions.

The awarded Contractor is responsible for the enrollment and compliance with all OCIP requirements of subcontractors of all tiers. The OCIP requirements are not intended to create any contract between the subcontractors and PRASA. The Contractor shall participate directly in the enforcement of any OCIP provisions that relate to Subcontractors but such participation shall not excuse the contractor of its responsibility for enrollment and compliance with all OCIP requirements of subcontractors of all tiers as provided above.

The OCIP will provide builder's risk, general liability, contractor's pollution liability, and excess liability for all eligible contractors of every tier enrolled in the OCIP and performing work at the project site (Section V of these Supplemental General Conditions provides a general description of the coverages provided under the OCIP).

In order to perform the Work contracted, the Contractor is required to procure other insurance policies, guarantees and bonds, not covered by the OCIP, as specified in Section VII of these Supplemental General Conditions. The Contractor shall not commence work under the Contract Documents until it has obtained the various insurances and bonds specified herein.

II. Program Eligibility

A. Eligible Contractor - Includes all contractors, subcontractors providing direct labor on the project site in connection with PRASA multi-year Capital Improvement Program (CIP). Temporary labor services and employee leasing companies are to be treated as a subcontractor.

B. Ineligible Contractor - Includes (but are not limited to) suppliers, vendors and material suppliers/dealers (that do not perform or subcontract the performance of installation at the site), guard services, truckers (including trucking to the project where delivery is the only scope of the work performed). Any person and/or organization that fabricates and/or manufactures products, materials and/or supplies away from the project site(s). Such persons shall be required to provide their own insurance to cover their operations and activities.

C. OCIP Insured Projects - Include those projects in connection with PRASA multi-year Capital Improvement Program (CIP), for eligible participants of all tiers who are properly enrolled in the OCIP by completing the OCIP Form 1.

III. Contractor's Responsibility - Awarded Contractor shall enroll in the OCIP by completing the attached OCIP Form 1 and submitting it to the OCIP Administrator upon receipt of award notice from PRASA. All awarding Contractors shall require that each of its subcontractors of all tiers enroll in the OCIP by submitting the OCIP Form 1 to the OCIP Administrator prior to the subcontractor entering the project site.

A. The Contractor for itself and on behalf of its enrolled subcontractor is required to cooperate with PRASA and its OCIP Administrator (PRASA's Risk and Insurance Office) with regards to the administration and operation of the OCIP. The Contractor's responsibilities shall include, but are not limited to:

1. Compliance with applicable Construction Safety Programs(s);
2. Compliance with PRASA's OCIP and Safety Manuals setting forth the administrative procedures required of the Contractors;
3. Provision(s) of necessary contract, operations and insurance information;
4. Immediately notifying the OCIP Administrator as soon as practicable of all subcontractors of all tiers upon award;
5. Cooperation with any insurance company and OCIP Administrator with respect to requests for claims or other information required under the program;
6. Immediately notifying PRASA that any Contractor/Subcontractor-provided coverage has been canceled, materially changed, or not been renewed;
7. Complete the following administrative forms within the time frames specified:
   a) PRASA OCIP Form 1 - OCIP Enrollment Form. Upon receipt of notice to proceed from PRASA.
   b) PRASA OCIP Form 2 - Notice of Completion. Upon completion of all work being performed under the contract.
   c) PRASA OCIP Form 6 – Safety Compliance Checklist. Upon receipt of notice to proceed from PRASA.

B. Completed forms will be sent to PRASA's OCIP Administrator at the following address:

Puerto Rico Aqueduct & Sewer Authority
Anelle Ramos, Principal Insurance Officer
Risk and Insurance Management Office
PO Box 7066
San Juan, PR 00916-7066
Phone #: (787) 620-2277 ext. 2085, 2083
Fax #: (787) 993-9045
Email: anelle.ramos@acueductospr.com

C. Failure to follow the procedures outlined in PRASA's OCIP and Safety Manuals may result in fines being assessed by concerned regulatory agencies against PRASA or the Contractor. PRASA shall deduct from monies due or to become due under payment of this contract any applicable fines or judgments that are assessed against PRASA.

IV. Contractor's Responsibility for its Subcontractors - The Awarded Contractor shall include all of the provisions of this agreement in every subcontract so that such provisions will be binding upon each of its subcontractors.

Notwithstanding of any other provision indicated in the Contract Documents, the Awarded Contractor shall require all subcontractors and others performing any Work under the Contract Documents to procure and maintain in effect, insurance of the types as specified in Section VII of this Supplemental General Conditions.

V. Coverage Provided in PRASA's OCIP - PRASA, at its sole expense and assuming any deductible obligation where applicable, has in force an owner controlled insurance program (OCIP) to furnish certain insurance coverages as respects to on-site-project activities. The OCIP will be for the benefit of PRASA and its Contractor and Subcontractors of all tiers (unless specifically excluded) who have on-site employees and dedicated payroll. Such coverage applies only to work performed under this contract at the Project Site. Project Site is defined as the area described in the construction contract documents including the areas available for contractor operations, access routes, right-of-ways, and additional sites necessary or incidental thereto in connection with the work or emanating from the project site, as approved by PRASA. Contractor and Subcontractors of all tiers must carry and maintain their own insurance for off-site activities. The OCIP policies are available for review by the Contractor upon request to PRASA. The terms of such policies or programs, as such policies or programs may be from time to time amended, will be incorporated by reference herein. The Contractor hereby agrees to be bound by the terms of coverage as contained in such insurance policies and/or self-insurance programs and acknowledge that such policies prevail over any contradictory terms of this Supplemental General Conditions.

A. PRASA, at its sole expense, will provide and maintain in force the types of insurance as listed below. Contractor and Subcontractors of all tiers enrolled in the OCIP agree that the insurance company policy limits of liability, coverage terms, and conditions shall determine the scope of coverage provided by the OCIP. Contractor and Subcontractors of all tiers agree that the purpose of this section is to provide a general understanding of the coverage provided by the OCIP.

B. **Commercial General Liability Insurance** - Provides coverage for On-site Project Activities for Bodily Injury, Property Damage, Personal Injury, Products and Completed Operations (Completed Operations has a 5-year extension).

Scope of Coverage

1. **Operations -** The performance of the work in conjunction with PRASA's OCIP Insured Projects by an enrolled contractors, and subcontractors of any tier performed at the Project Site.

2. **Insureds -** PRASA, enrolled Contractor, and enrolled Sub-contractor of all tiers.

3. **Limits**
   - $1,000,000 Each Occurrence / Bodily Injury & Property Damage
   - $1,000,000 Personal Injury & Advertising Injury
   - $2,000,000 General Aggregate
   - $2,000,000 Products and Completed Operations Aggregate
   - $2,000,000 Employer's Liability Stop Gap Coverage
   - $250,000 Fire Damage
   - $5,000 Medical Payments

4. **Special Condition –** Five (5) years extension in completed operations coverage from the termination date of this policy or its renewal (s).

5. **Contractors / Sub-Contractors Assessment**
   - $5,000 deductible per claim or the actual cost of the claim, whichever is less, will be assessed for bodily injury and property damage.

This insurance is primary for all bodily injury, property damage, or personal / advertising injury occurring at the Jobsite.

C. **Excess General Liability Insurance –** Provides Liability coverage in excess Primary Commercial General Liability Coverage for On-Site Project Activities. The program is structured in two layers as described below:

Scope of Coverage

1. **Operations -** The performance of the work in conjunction with PRASA's OCIP Insured Projects by an enrolled Contractor, and Subcontractor of any tier performed at the Project Site.

2. **Insured -** PRASA, enrolled Contractor and enrolled Subcontractor of all tiers.

3. **Limits**
    - Excess Liability
        - 25,000,000 Each Occurrence / $25,000,000 Policy Aggregate, Excess $1,000,000 / $2,000,000 Primary Layer
        - Self-Insured Retention of $10,000

    The Products and Completed Operations Aggregate is for the term of the policy period including five (5) years extended period and will be activated upon completion of the Project.

D. **Contractor's Pollution Liability -** Provides coverage for Bodily Injury, Property Damage or Environmental Damage claims from third parties caused by pollution conditions resulting from covered operations. The policy is written on an "occurrence" form and includes a five year completed operations period.

Scope of Coverage

1. **Operations -** All construction activities of an enrolled contractor, subcontractor or consultant of any tier performed at the project site in connection with PRASA's OCIP construction projects.

2. **Insured –** Contracted construction management teams, contractors, subcontractors, remediation and environmental contractors, and consultants, sub consultants and subcontractors of all tiers providing services in connection with projects covered under PRASA's OCIP.

3. **Limits**
    - $20,000,000 Per Occurrence Limit
    - $20,000,000 Aggregate Limit
    - Self-Insured Retention of $25,000

E. **Builder's Risk / Installation Floater –** Provides coverage under an "all risks" form (including flood and earthquake) for physical loss or damage to work or any part thereof.

Scope of Coverage

1. **Operations -** Work done in conjunction with PRASA's OCIP by enrolled Contractors and sub-contractors of any tier.

2. **Insured –** PRASA and Contractors / Subcontractors of any tier.

3. **Limits**
    - $30,000,000 Per occurrence and in annual policy aggregate

- $30,000,000 Maximum Value Per Insured Project

4. **Sub limits**
   - $1,000,000 or 10% of the loss for Professional Fees whichever is less- any one occurrence
   - $1,000,000 physical loss of or damage to insured property in Transit anyone conveyance
   - $1,000,000 each and every loss in the annual aggregate for Principal's Existing Property
   - $2,000,000 Physical loss of or damage to insured Property in Off-Site Storage – anyone storage location
   - $2,000,000 or 25% of the physical loss of or damage to insured property in any occurrence, whichever is less - Expediting Expense
   - $250,000 Fire Brigade Charges / Extinguishing Expenses; any one occurrence
   - $5,000,000 or 25% of the amount of insured physical loss of or damage to insured property in anyone occurrence, whichever is less - Debris Removal
   - $250,000 Physical Damage to Plans, Blueprints, Drawings or other contract documents

5. **Builder's Risk / Installation Floater Assessment**
   - $10,000 physical loss of or damage to property insured anyone occurrence, except: as respect water damage other than flood
   - $100,000 in respect of the Principal's Existing Property
   - $100,000 in respect of property insured while undergoing Testing and Commissioning
   - $100,000 in respect Damaged to Existing Property

DEDUCTIBLE RESPONSIBILITY WILL BE ASSESED TO THE RESPONSIBLE CONTRACTOR(S) BASED UPON THE INSURANCE CARRIER'S INVESTIGATION OF THE FACTS AND THEIR APPORTIONMENT OF LIABILITY.

The Builders Risk will not provide coverage for any loss:

(1) to horizontal directional drilling, pipe jacking, micro tunneling (except as specifically endorsed in the policy),
(2) underground works (other than laying pipelines and construction of underground collector system)
(3) to materials (unless the materials are to be incorporated into the Project);
(4) tools, or
(5) equipment of the Contractor or any tier of Subcontractor, or any other person furnishing labor or materials for the Work. Contractor agrees to

indemnify, defend, and hold PRASA and its officers, agents, and employees harmless from any such loss, theft, or disappearance.

F. **Certificates and Policies -** All the PRASA furnished insurance coverages shall be either written by insurance companies approved by PRASA or self-insured. PRASA or its appointed representative shall provide Contractors and Subcontractors with appropriate certificates of insurance or self-insurance evidencing the coverage outlined above.

G. **Termination/Modification of the OCIP -** PRASA reserves the right to terminate any contractor/subcontractor from the OCIP, and to terminate or modify the OCIP coverage, or any portion thereof. PRASA shall provide ninety-(90) days advance written notice to all contractors/subcontractors covered by the OCIP. Contractors and Subcontractors of all tiers shall immediately be required to obtain appropriate replacement insurance coverage acceptable to PRASA. The reasonable cost of such replacement insurance, excluding deductibles, will be reimbursed by PRASA. Written evidence of such insurance shall be provided to PRASA prior to the effective date of the termination or modification of the OCIP.

VI. Assignment of Premiums - PRASA will be responsible for the payment of all premiums associated solely with the OCIP including deductibles, and will be the sole recipient of any dividend(s) and/or return premium(s) generated by the OCIP. In consideration of PRASA's provision of said coverages, by signing this contract, the contractor agrees to: Irrevocably assign to and for the benefit of PRASA, all return premiums, premium refunds, premium discounts, dividends, retentions, credits, and any other monies due to PRASA in connection with the insurance which PRASA herein agrees to provide. The Awarded Contractor further agrees to require each subcontractor of all tiers to execute a similar assignment for the benefit of PRASA.

VII. Contractor's-Provided Coverage - Notwithstanding of any other provision in the Contract Documents to the contrary, Contractor will be required to provide the following additional coverages that are not provided under PRASA's OCIP program.

A. For any work under this contract, and until completion and final acceptance of the work, the Contractor, at its own expense, must promptly furnish to PRASA's OCIP Administrator, certificates of insurance giving evidence that certain coverages are in force. **Contractor is responsible for compliance with these requirements by its subcontractors of all tiers**.

B. Upon receipt of notice to proceed, Contractor agrees and shall cause its subcontractors of all tiers to agree to obtain the insurance set out below from a company or companies acceptable to PRASA as follows:

1. **Workmen's Compensation Insurance**
   a) The Contractor shall provide Workmen's Compensation Insurance as required by the Workmen's Compensation Act of the Commonwealth of Puerto Rico. The Contractor shall also be responsible for compliance with said Workmen's Compensation Act by all its subcontractors.

   b) The Contractor shall furnish the Authority a certificate from the State Insurance Fund showing that all personnel employed in the work are covered. If imported technical personnel are exempted, the Contractor shall furnish evidence of such exemption and certificate from the insurance carrier covering said personnel.

   c) For imported personnel eligible for exemption, as per Act. No. 16 of May 16, 1958, the Contractor shall refer to Appendix "A".

2. **Comprehensive Automobile Liability Insurance -** Contractor agrees, and shall cause its subcontractors of all tiers to agree, to provide, at their own expense, Automobile Liability Insurance for claims arising from the ownership, maintenance, or use of a motor vehicle at, upon, or away from the Project Site. The insurance shall cover all owned, non-owned, and hired automobiles used in connection with the work, with the following minimum limits of liability:

   $1,000,000 Combined Single Limit Bodily Injury and Property Damage per Occurrence

   a) The certificate evidencing this coverage shall state that the policy has been endorsed to name PRASA as an Additional Insured.
   b) This policy shall be endorsed to include Waiver of Subrogation in favor of PRASA and PMC.
   c) Notice of Cancellation - Policies and or certificates shall specifically provide an advanced sixty-(60) day notice of cancellation, non-renewal or material change to be sent to the OCIP Administrator at the aforementioned address, as a condition for such cancellation, non-renewal or material change to take place.
   d) If there is the exposure of transportation of hazardous materials the following endorsement shall be provided. Under this policy, Motor Carrier Endorsement, of the Motor Carrier Act of 1980, Form MCS-90, shall be provided by the Contractor.

3. **Proposal Guarantee -** Unless otherwise stated in the Bid Documents, proposals must be accompanied by a Proposal Guarantee in an amount equal to five (5%) percent of the proposal and complying with the requirements for bonds in Section 4 and Section 7.

If the proposal guarantee is a bid bond, an original and four (4) copies of the bid bond must be submitted, duly completed and signed, using the forms provided by PRASA in the Bid Documents. The bid bond shall remain effective for at least one-hundred eighty (180) days after the bid opening date or for greater time, if so specified in the Bid Documents.

If the Proposal Guarantee is a certified check it will be retained to pay for any damage or loss to PRASA in case the successful Bidder shall neglect or refuse to enter into a contract in accordance with the proposal.

The bid bond must be accompanied by the
a) "Power of Attorney",
b) Acknowledgement of Surety,
c) Copy of license issued by the Office of the Insurance Commissioner of Puerto Rico, and the bond shall be duly classified as in Section J

4. **Bonds -** Unless otherwise stated in the Contract Documents, the Contractor must, within ten (10) calendar days from the date of Notice of Award, furnish and file with the Owner, in form satisfactory to, and with Sureties approved by the Owner, the following:

   a) A Performance Bond in the amount of one hundred percent (100%) of the contract price, with good and sufficient surety satisfactory to PRASA guaranteeing that the Contractor will well and faithfully perform the contract work within the time specified.
   b) A Payment Bond in the amount of one hundred percent (100%) of the contract price, with good and sufficient surety satisfactory to PRASA to guarantee the prompt payment of all labor, supervision, equipment and materials required in the performance of the work.
   c) A separate and additional Payment Bond in an amount equal to 20% of the Contract Price, payable to the Secretary of Puerto Rico to guarantee payment to laborers and employees of Contractor as required by Act No. 111, approved June 22, 1961.
   d) All bonds shall be presented to PRASA before commencement of any work and shall be executed in the required official form of PRASA.
   e) All bonds submitted by Bidder/Contractor shall be accompanied with the following documents:
      i. "Power of Attorney",
      ii. Acknowledgement of Surety,
      iii. Copy of license issued by the Office of the Insurance Commissioner of Puerto Rico.

   f) Contractor shall also furnish such other Bonds as are required by the Contract Documents.
   g) The Payment and Performance Bond shall remain in effect as follows:

i. Under the Performance Bond: one (1) year after the date when the final payment becomes due for warranty work, as stipulated in the warranty clause, or as provided otherwise by the Laws or Regulations or by the Contract Documents.
ii. Under the Payment Bond: six (6) months after the retainage is paid in full to the Contractor, except as provided otherwise by the Laws or Regulations or by the Contract Documents.

h) If the Surety on any Bond furnished by Contractor is declared bankrupt or becomes insolvent or its right to do business is terminated in any state where any part of the Project is located or it ceases to meet the requirements of the Puerto Rico's Insurance Commissioner, Contractor shall within ninety (90) days thereafter substitute said Bond and Surety with acceptable substitutes.

i) Bonds can be furnished in cash, coin of the United States of America, by certified check payable to Owner, by manager's check from a bank, money order from a bank or from the post office, or non-revocable letter of credit.

j) Bonds can also be issued by a bonding company classified according to the following classification scales included in the "Best Key Rating Guide". The Best Rating Guide is based on quantitative and qualitative evaluation of the insurance companies in terms of economic solvency, operating performance and business profile. Insurance Companies classification should be as follows:

A++ and A+ …… Superior

OR

A and A- …….. Excellent

According to the above classifications reinsurance will be accepted of at least 90% in the Best Key Rating Guide and authorized to do business in Puerto Rico by the Insurance Commissioner office. If they are not authorized, they will need previous permit from the Insurance Commissioner.

Independent insurance companies, notwithstanding if they are or not classified by the "'Best Insurance Report", will not be accepted if they are subject to some immediate regulatory action and in accordance with the National Association of Insurance Commissioners, or that are subject of an impairment order issued by the Insurance Commissioner. The insurance companies will authorize PRASA to obtain from the Insurance Commissioner's Office the necessary information on said actions and on

any impairment order that has been issued. They will also authorize PRASA to obtain direct confirmation from the insurers.

These bonds must be issued by a Surety listed in the US Treasury Department latest edition of circular 570 and authorized to transact business in the Commonwealth of PR.

5. Other requirements

a) The insurance policies and bonds required herein shall be obtained from insurance and surety companies complying with the requirements of Puerto Rico's Insurance Commissioner.
b) The Contractor shall, throughout the performance of the Work under the Contract Documents and until the Final Acceptance of the Project, maintain current, and in effect all the required insurance policies and bonds.
c) Insurance coverage in the minimum amounts set forth herein shall not be construed to relieve the Contractor of liability in excess of such coverage. Contractor must give sixty (60) calendar days written notice before any policy coverage is changed, canceled or non-renewed.
d) The Owner reserves the right to require any changes of insurance or coverage which considers necessary, revise policies renewals in this contract, and to adapt insurance requirements to needs arising during the contracting process.

C. **Certificates of Insurance** - Prior to entrance on the Project Site, Contractors agrees, and shall cause its subcontractors of all tiers to agree, to provide to PRASA's OCIP Administrator a Certificate of Insurance setting out the coverages described herein, limits, and amendments to the certificate required due to changes to the work to be performed under the contract until completion and final acceptance of work. Insurances must be placed with carriers having an A.M. Best's Guide rating of A-VII or better. Such certificate shall be forwarded to the OCIP Administrator at the address described on Section III B.

D. **Furnishing of Policies and Bonds**

1. All required policies of insurance and bonds shall be in a form acceptable to the PRASA, and shall be issued only by insurance companies authorized to do business in Puerto Rico and duly licensed as applicable under the Insurance Code of Puerto Rico.

2. The Contractor shall furnish the original and one certified copy of each required bond duly signed by an Attorney in Fact and countersigned by an authorized representative.

3. The Contractor shall furnish a complete copy of each policy required under this contract, or a Certificate of Insurance signed by an authorized

representative of the insurer in Puerto Rico, describing the coverages afforded. This certification shall be in an “Accord” form, in general use by the insurers.

VIII. **Other Insurance -** Any type of insurance or any increase of limits of liability not described above which a contractor requires for its own protection or on account of any statute shall be its own responsibility and its own expense.

The OCIP is not intended to provide the Contractor and its subcontractors of all tiers with complete insurance programs. PRASA shall not be responsible to provide any insurance coverage not specified in Section V above. The Contractor and its Subcontractors of all tiers have the responsibility to make sure their insurance programs fit their particular needs, and it is their responsibility to arrange for and secure any insurance coverage, which they deem advisable, whether or not specified above.

PRASA reserves its right to require any changes of insurance or coverage which considers necessary in this contract and to adapt insurance requirements to needs arising during the contracting process.

IX. **Subcontractor Participation -** Upon execution of the contract, the Contractor will immediately report all new eligible Subcontractors of all tiers to the OCIP Administrator for enrollment in the OCIP. The Contractor shall incorporate all provisions of these Supplemental General Conditions in any Subcontractor agreement and shall cause its Subcontractors to cooperate fully with PRASA and the insurance companies for the project, in the administration of the OCIP. The Contractor agrees to cooperate in the safety and accident prevention program and claim handling procedures as established for the project, by PRASA. In accordance with this paragraph, **Contractor shall not permit any subcontractor of any tier to enter the Project Site prior to submitting enrollment forms in the PRASA’s OCIP; failure to do so may negate the afforded coverage(s)**. Any failure by the Contractor in complying with this provision shall constitute a contractual material breach of Contractor and upon its occurrence PRASA may pursue any and all rights or remedies it may have under this Contract and/or under the law, including terminating any participant from the OCIP.

X. **Waiver of Subrogation** - Contractor waives all rights of subrogation and recovery against PRASA, its designee(s), Program Manager Consortium, Construction Managers, General Contractors and subcontractor(s) of all tiers to the extent of any loss or damage, which is insured under the OCIP. Contractor waives its rights of subrogation and recovery for damage to any property or equipment against PRASA, its designee(s), Construction Managers, General Contractors and subcontractor(s) of all tiers. Contractor shall require all subcontractor(s) to similarly waive their rights

of subrogation and recovery in each of their respective construction contracts with respect to their work.

XI. **No Release -** The carrying of the above-described insurance shall in no way be interpreted as relieving the Contractor of any other responsibility or liability under this agreement or any applicable law, statute, regulation or order.

XII. **Approval of Forms and Companies** - All insurance described in this contract shall be written by an insurance company or companies satisfactory to PRASA and licensed to do business in Puerto Rico and shall be in a form and content satisfactory to PRASA. No party subject to the provisions of this contract shall violate or knowingly permit to be violated any of the provisions of the policies of insurance described herein.

XIII. **OCIP Program Manual and Claims Procedures -** The Contractor agrees, and shall cause its subcontractors of all tiers to agree, to adhere to and perform all reporting requirements as detailed in PRASA's OCIP Manual and Safety documents. Failure to follow the procedures outlined in these documents may result in fines being assessed by the appropriate state agencies or commissions or default judgments from a lawsuit against PRASA or the Contractor. The contractor shall, at its own expense, be responsible for any fines or judgments arising out of failure to follow these procedures. PRASA shall deduct from monies due or to become due under payment of this contract any applicable fines or judgments that are assessed against PRASA.

XIV. **Owner Controlled Insurance Program -** Subject to the notice provision of section V (G), PRASA reserves the right to modify or cancel the owner controlled insurance program (OCIP) or to otherwise determine if the awarded contractor will provide their own insurance coverage in lieu of the OCIP provided coverage, or part thereof.

PRASA OWNER CONTROLLED INSURANCE PROGRAM (OCIP)
Safety Overview

The effectiveness of the Safety and Health Program will depend upon the active participation and personal cooperation of all. Project cooperation and coordination of efforts toward carrying out the overall safety responsibilities are needed for an effective program.

PRASA and the Program Manager Consortiums (OCIP Team) will monitor the Participants Safety and Loss Control Programs, and will be assisted by the Loss Control Consultants from the OCIP Insurance Company and Aon Risk Solutions of Puerto Rico, Inc. PRASA and the Program Manager Consortiums has the authority to stop work when either site conditions and/or work practices present an imminent danger (i.e. may result in serious injury, death or extensive property damage) until those conditions and/or practices are corrected.

- Each Contractor shall be held responsible for its own and its subcontractor's compliance with the project safety requirements.
- Each Contractor and its Subcontractors shall establish and enforce an effective disciplinary program.
- Each Contractor and its Subcontractors shall designate an on the job safety representative. This may include a supervisor/foreman with safety knowledge. This person(s) will be the PRASA's contacts for safety concerns.
- All employees (Contractors, Subcontractors, Engineers, etc…) working on the job shall have the proper Personal Protective Equipment for the job task they are performing. At the minimum a hard hat, safety glasses, safety vest, working cloth and work boots.
- All employees (Contractors, Subcontractors, Engineers, etc.) shall have the proper training for the job task they are performing (confined space, fall protection, powder actuated tools, traffic control, equipment operating, etc.)
- Each Contractor and its Subcontractors shall at a minimum conduct a weekly safety meeting with all employees. A written record of the weekly safety meeting must be available where required by PRASA and the Program Manager Consortiums.
- Each Contractor and its Subcontractors shall assure that a qualified "Competent Person" is provided at work locations where required by OSHA.
- Each Contractor and its Subcontractors shall assure that all applicable forms (confined space permit, lock out/tag out, critical lift checklist, excavation permit, etc.) are provided at work locations where required by OSHA.
- Each Contractor and its Subcontractors shall comply and provide evidence of all applicable safety regulations in effect as of the date of this agreement.
- Each Contractor/Subcontractor shall adhere to a 100% drug/alcohol free work zone. At a minimum a pre-employment & post-accident testing is required. The

contractor will bear the expense associated with pre-employment testing. A positive post-accident test or positive pre-employment test will result in worker dismissal from the project for 6 months. After which, the worker may return after a successful (negative) re-test. Testing will be performed in accordance with NDA standards.

This is only a brief overview of the “PRASA Owner Controlled Insurance Program” Safety program. In the event of a conflict between the provisions of this overview, the OCIP manual and applicable local, state or federal safety and health laws, regulations and/or standards, contract documents or the Contractor’s Safety Plan, the more stringent shall apply.

PMC:	CONTRACT:

PRASA OCIP FORM 1



PUERTO RICO AQUEDUCT & SEWER AUTHORITY
OCIP ENROLLMENT FORM

Your Company Name:		
Contact Name:		
Physical Address:		
Mailing Address:		
City:	State:	Zip-code:
Tel. #:	Cellular #:	
Fax #:	Pager #:	
E-Mail Address:	Federal ID #:	

Contract Information		
Who awarded your contract:	General Contractor:	
Project Name:		
Site Contact :	Tel.:	
Safety Contact:	Tel.:	
Type of work to be done:		
Start Date:	Termination Date:	Contract Amount: $

Expected Use of Subcontractors

Company Name & Address	**Contact Person**	**Telephone No.**	**Start Date**

This enrollment form must be received prior to starting work on the Project at the OCIP Administrator's Office:

Puerto Rico Aqueduct & Sewer Authority
Risk & Insurance Management Office
PO Box 7066
San Juan, PR 00916-7066
Tel. (787) 620-2277 Fax (787) 993-9045

SIGNED BY: _____ DATE: _____

PMC:	CONTRACT:

PRASA OCIP FORM 2

PUERTO RICO AQUEDUCT & SEWER AUTHORITY
OCIP NOTICE OF COMPLETION FORM

Please be advice, we are scheduled to complete our work for:

Job Name/Description: _____

_____

Completion Date: _____ Awarded by: _____ Prime Contractor: _____

Final Contract
Price: _____

We used the following subcontractors who will also complete their work on the date shown above:

_____
_____
_____
_____
_____

_____ This is our only contract for PRASA

_____ We are still working on the following jobs for PRASA

Awarded by	Job Name/Description	Prime (If any)

Your company's Name: _____

By: _____ Title: _____

This form must be sent to the following address:

Puerto Rico Aqueduct & Sewer Authority
Risk & Insurance Management Office
PO Box 7066
San Juan, PR 00919-7066
Tel. (787) 620-2277
Fax. (787) 993-9045

PMC:	CONTRACT:

PRASA OCIP FORM 6

PUERTO RICO AQUEDUCT & SEWER AUTHORITY
SAFETY COMPLIANCE CHECK LIST

Your Company Name:		
Physical Address:		
Mailing Address:		
City:	State:	Zip Code
Tel #:	Fax #:	

Project Information

Project Name and Brief Description:		
Your Company Site Contact Person For This Project:	Tel #:	
Your Company Safety Contact Person For This Project:	Tel #:	
Start Date:	End Date:	Emergency Tel #:

Check List Of Documents To Be Submitted To PRASA Infrastructure Office:
(Please, attach any documents that have not been evaluated within the past year by PRASA Infrastructure Office)

_____ Safety Program	_____ Training Certificates and Licenses Needed	_____ Coordination Meeting Scheduled
_____ Site Specific Work Plan	_____ List of Chemicals to be used in the Project	(Please, include date, time and place.)
_____ Material Safety Data Sheet (MSDS) for each Chemical on the Previous List		
_____ Name any Specific Safety Coordination Needed to Perform the Project		

Expected Use of Subcontractors:

Company Name	Brief Description of Work	Anticipated Start Date at Project Site

This compliance form must be received fully filled by the OCIP Safety Manager prior to starting work.
Please, send to:
Puerto Rico Aqueduct & Sewer Authority
Infrastructure Department
P.O. Box 7066, San Juan, PR 00916-7066
Tel. (787) 999-1717, Fax: (787) 999-1775

Signed by: _____ Date: _____

WORKMEN'S COMPENSATION INSURANCE REQUIREMENTS FOR IMPORTED TECHNICAL SERVICES

APPENDIX "A"

A. Introduction

Act No. 16, approved on May 16, 1958, authorizes the Commonwealth State Insurance Fund Administrator to exempt employer's from payment of premium for salaries paid to imported technical personnel.

The basic requirements for the exemption are:

1. Said technical personnel must be hired, the same special skills for the job not readily available in Puerto Rico.
2. Exemption cannot exceed two years per employee.
3. Technical personnel must be covered for workmen's compensation benefits equal or greater to those provided under the Puerto Rico Workmen's Compensation Act.

B. Requirements

Exemption requests must be filed with the Commonwealth State Insurance Fund for each case.

Therefore, every firm entering into a contract with PRASA for the furnishing of services to be rendered by imported technical personnel must submit, prior to contract execution or purchase order issuance, the following information:

1. A list containing the following information:

    a. Name, residence, and usual place of employment of all such technical personnel temporarily transferred to Puerto Rico.
    b. Effective date of employment in Puerto Rico for each technical employee so transferred to Puerto Rico and expected duration of their stay in the island.
    c. Technical qualifications of each employee transferred to Puerto Rico and their job descriptions while in the island.
2. If such technical personnel are covered by an insurance policy, a complete copy of each workmen's compensation insurance policy, including the endorsements pertaining to such coverage, covering such technical personnel while working in Puerto Rico.

3. If item 2, above, is applicable, a certified statement by the Secretary of the Insurer or insurers insuring said policies stating that:

a. The copy of each policy is a true and complete copy of the policy issued by the insurer.

b. Each policy so certified will be in full force and effect during the entire policy period shown in the declarations of the period.

c. Each policy so certified will provide workmen's compensation insurance coverage for all technical personnel of the insured while working in Puerto Rico. As part of this statement, there must be indication of the name of the state under whose workmen's compensation law benefits will be provided for all technical personnel of the insured while working in Puerto Rico.

4. If item 2 is not applicable, a certificate issued by the appropriate governmental agency having jurisdiction over workmen's compensation insurance coverage stating that their coverage is extended for such technical personnel during their entire stay in Puerto Rico. The certificate must include the effective date of the approval of the extension of coverage, the duration of the approval and the conditions, if any, attached to such approval.

5. The exact location in Puerto Rico of the construction project where such technical personnel will be or is employed.

B.5 - FEDERALLY FUNDED PROJECTS

All these sections apply when the Funding Agency is the Environmental Protection Agency, the Health Department, the Federal Emergency Management Agency or the Rural Development.

Section 1.01 Davis Bacon

All construction contracts of more than $2,000 shall comply with the Davis-Bacon Act, 40USC276a to a-7, as supplemented by the Department of Labor regulations, 29CFR Part 5 "Labor Standards Provisions Applicable to Contracts Governing Federally Financed and Assisted Construction". Under this Act, contractors shall be required to pay wages to laborers and mechanics at a rate not less than the minimum wages specified in a wage determination made by the Secretary of Labor. In addition, contractors shall be required to pay wages not less than once a week. The award of this contract is conditioned upon the acceptance of the wage determination. PRASA will report all suspected or reported violations to the Environmental Protection Agency.

Contractor is responsible for obtaining the current wage determination. It can be found in the internet at the following address: http://www.wdol.gov/* (formerly http://www.access.gpo.gov/davisbacon/index.html*)

The wage determination GENERAL DECISION PR030002 06/13/2003 PR2 for Heavy and Highway Projects is found below:

WLBA (WD)-1
(formerly SOL-123)
7/69

U.S. DEPARTMENT OF LABOR
OFFICE OF THE SECRETARY
WASHINGTON

DECISION OF THE SECRETARY

This case is before the Department of Labor pursuant to a request for a wage predetermination as required by law applicable to the work described.

A study has been made of wage conditions in the locality and based on information available to the Department of Labor the wage rates and fringe payments listed are hereby determined by the Secretary of Labor as prevailing for the described classes of labor in accordance with applicable law.

This wage determination decision and any modifications thereof during the period prior to the stated expiration date shall be made a part of every contract for performance of the described work as provided by applicable law and regulations of the Secretary of Labor, and the wage rates and fringe payments contained in this decision, including modifications, shall be the minimums to be paid under any such contract by contractors and subcontractors on the work.

The contracting officer shall require that any class of laborers and mechanics which is not listed in the wage determination and which is to be employed under the contract, shall be classified or reclassified conformably to the wage determination, a report of the action taken shall be sent by the Federal agency to the Secretary of Labor. In the event the interested parties cannot agree on the proper classification or reclassification of a particular class of laborers and mechanics to be used, the question accompanied by the recommendation of the contracting officer shall be referred to the Secretary for determination.

Before using apprentices on the job the contractor shall present to the contracting officer written evidence of registration of such employees in a program of a State apprenticeship and training agency approved and recognized by the U.S. Bureau of Apprenticeship and Training.

The contractor shall submit to the contracting officer written evidence of the established apprentice journeyman ratios and wage rates in the project area, which will be the basis for establishing such ratios and rates for the project under the applicable contract provisions.

Fringe payments include medical ad hospital care, compensation for injuries or illness resulting from occupational activity, unemployment benefits, life insurance, disability and sickness insurance, accident insurance (all designated as health and welfare), pensions, vacation and holiday pay, apprenticeship or other similar programs and other bona fide fringe benefits.

By direction of the Secretary of Labor,



E. Irving
Manger, Associate Administrator
Division of Wage Determinations
Wage and Labor Standards Administration

General Decision Number: PR080002 07/31/2009 PR2

Superseded General Decision Number: PR20070002

State: Puerto Rico

Construction Types: Heavy and Highway

Counties: Puerto Rico Statewide.

HEAVY AND HIGHWAY CONSTRUCTION PROJECTS.

Modification Number	Publication Date
0	02/08/2008
1	07/25/2008
2	07/31/2009

* SUPR1995-001 05/26/1995

	Rates	Fringes
CARPENTER	$ 7.25	.50
CEMENT MASON/CONCRETE FINISHER	$ 7.25	.47
ELECTRICIAN	$ 7.25	.80
IRONWORKER	$ 7.25	
Laborers:		
Laborers (unskilled)	$ 7.25	.43
Pipelayers	$ 7.25	
Line Construction:		
Linemen	$ 7.25	.84
Telephone linemen: Ground & Pole	$ 7.25	
PIPEFITTER	$ 7.25	
PLUMBER	$ 7.25	

Power equipment operators:			
Asphalt Luters	$	7.25	3.11
Backhoe	$	8.25	.59
Bulldozer	$	7.25	.99
Crane	$	7.25	1.43
Diggers	$	7.25	
Grader	$	7.25	1.06
Greaser/Oilers	$	7.25	
Loaders	$	7.25	.92
Mechanics	$	7.25	.76
Paver	$	7.25	3.15
Roller	$	7.25	3.14
SCRAPERS:			
18 CY and over	$	8.10	.59
less than 18 CY	$	7.80	.59
less than 185 HP	$	8.00	.59
Screedman	$	8.80	3.13
TRACTORS:			
185 HP and over	$	8.10	.59
SCRAPERS			
TRUCK DRIVER	$	7.25	

WELDERS - Receive rate prescribed for craft performing operation to which welding is incidental.

==========

Unlisted classifications needed for work not included within the scope of the classifications listed may be added after award only as provided in the labor standards contract clauses (29CFR 5.5 (a) (1) (ii)).

In the listing above, the "SU" designation means that rates listed under the identifier do not reflect collectively bargained wage and fringe benefit rates. Other designations indicate unions whose rates have been determined to be prevailing.

WAGE DETERMINATION APPEALS PROCESS

1.) Has there been an initial decision in the matter? This can be:

* an existing published wage determination
* a survey underlying a wage determination
* a Wage and Hour Division letter setting forth a position on a wage determination matter
* a conformance (additional classification and rate) ruling

On survey related matters, initial contact, including requests for summaries of surveys, should be with the Wage and Hour Regional Office for the area in which the survey was conducted because those Regional Offices have responsibility for the Davis-Bacon survey program. If the response from this initial contact is not satisfactory, then the process described in 2.) and 3.) should be followed.

With regard to any other matter not yet ripe for the formal process described here, initial contact should be with the Branch of Construction Wage Determinations. Write to:

Branch of Construction Wage Determinations
Wage and Hour Division
U.S. Department of Labor
200 Constitution Avenue, N.W.
Washington, DC 20210

2.) If the answer to the question in 1.) is yes, then an interested party (those affected by the action) can request review and reconsideration from the Wage and Hour Administrator (See 29 CFR Part 1.8 and 29 CFR Part 7). Write to:

Wage and Hour Administrator
U.S. Department of Labor
200 Constitution Avenue, N.W.
Washington, DC 20210

The request should be accompanied by a full statement of the interested party's position and by any information (wage payment data, project description, area practice material, etc.) that the requestor considers relevant to the issue.

3.) If the decision of the Administrator is not favorable, an interested party may appeal directly to the Administrative Review Board (formerly the Wage Appeals Board). Write to:

Administrative Review Board
U.S. Department of Labor
200 Constitution Avenue, N.W.
Washington, DC 20210

4.) All decisions by the Administrative Review Board are final.

==========

END OF GENERAL DECISION

Section 1.02 Contract Work Hours and Safety Standard

If the contract is in excess of $100,000 Contractor shall comply with the Contract Work Hours and Safety Standards Act, 40USC327-333, as supplemented by the Department of Labor regulations 29CFR part 5. Under section 102 of the Act, each Contractor shall be required to compute the wages of every mechanic and laborer on the basis of a standard week of 40 hours. Work in excess of the standard workweek is permissible provided that the worker is compensated at a rate of not less than ½ times the basic rate of pay for all hours worked in excess of 40 hours in the workweek. Section 107 of the Act is applicable to construction work and provides that no laborer or mechanic shall be required to work in surroundings or under working conditions which are unsanitary, hazardous or dangerous. Regulation 29CFR Part 5 is included in the Supplementary Content of this document.

Section 1.03 Small, Minority and Women's Businesses

It is the policy of the Funding Agency to award a fair share of subagreements to small, minority, and women's businesses. If Contractor intends to let any subcontracts for a portion of the work, Contractor shall take affirmative steps to assure that small, minority, and women's businesses are used when possible as sources of supplies, equipment, construction, and services. Affirmative steps shall consist of:

1. including qualified small, minority and women's businesses on solicitation lists;

2. assuring that small, minority and women's businesses are solicited whenever they are potential sources;

3. dividing total requirements when economically feasible, into small tasks or quantities to permit maximum participation of small, minority, and women's businesses;

4. establishing delivery schedules, where the requirements of the work permit, which will encourage participation by small, minority, and women's businesses;

5. using the services and assistance of the Small Business Administration and the Minority Business Development Agency of the U.S. Department of Commerce;

6. requiring each party to a subcontract to take the affirmative steps of this section; and

7. Contractor is encouraged to procure goods and services from labor surplus area firms.

Section 1.04 Access to Site, Records and Audits

The Contractor must provide access to site to the representatives of the Funding Agency, PRASA and the State during the construction period of the project, whenever it is in preparation or progress, and shall provide proper facilities for such access and inspections. When the Funding Agency is the Environmental Protection Agency, the Federal Emergency Management Agency and/or the Health Department the Contractor also must provide access to the Corps of Engineers.

PRASA, the Funding Agency, the Comptroller General, or any of their duly authorized representative, shall have access to any books, documents, papers, and records of the Contractor, which are pertinent to the Contract, for the purpose of making audits, examinations, excerpts, and transcriptions. Contractor shall maintain all required records for three years after final payment is made and all other pending matters are closed.

Section 1.05 Environmental Requirements

When constructing a project involving trenching and/or other related earth excavations, Contractor shall comply with the following environmental constraints:

1. Wetlands -- When disposing of excess, spoil, or other construction materials on public or private property, Contractor shall not fill in or otherwise convert wetlands.

2. Floodplains -- When disposing of excess, spoil, or other construction materials on public or private property, Contractor shall not fill in or otherwise convert 100 year floodplain areas delineated on the latest Federal Emergency Management Agency Floodplain Maps.

3. Historic Preservation -- Any excavation by Contractor that uncovers an historical or archeological artifact shall be immediately reported to PRASA and a representative of the Funding Agency. Construction shall be temporarily halted pending the notification process and further directions issued by PRASA after consultation with the State Historic Preservation Officer (SHPO).

4. Endangered Species -- Contractor shall comply with the Endangered Species Act, which provides for the protection of endangered and/or threatened species and critical habitat. Should any evidence of the presence of endangered and/or threatened species or their critical habitat be brought to the attention of Contractor, Contractor will immediately report this evidence to PRASA and a representative of the Funding Agency. Construction shall be temporarily halted pending the notification process and further directions issued by the Funding Agency after consultation with the U.S. Fish and Wildlife Service.

Section 1.06 Bonds

All bonds required from Contractor as stated in the Contract Documents shall be obtained from companies holding certificates of authority as acceptable sureties pursuant to 31CFR part 223, "Surety Companies Doing Business with the United States."

Section 1.07 Labor standards provisions

This clause applies only when required by statute. Each subagreement for construction shall comply with provisions of the Davis-Bacon Act, 40USC 276a-276a-7; the Copeland Regulations, 29CFR Part 3; the Contract Work Hours and Safety Standards Act-Overtime Compensation, 940 USC 327-333, and the nondiscrimination provisions in Executive Order 11246, as amended.

Section 1.08 Equal Opportunity Requirements

On construction contracts exceeding $10,000, Contractor shall comply with the Executive Order 11246 of the President of the U.S.A. entitled "Equal Employment Opportunity," as amended by Executive Order 11375, and as supplemented in the Department of Labor regulations, 41 CFR Part 60.

Contractor compliance with Executive Order 11246 shall be based on its implementation of the Equal Opportunity Clause, specific affirmative active obligations required by the Standard Federal Equal Opportunity Construction Contract Specifications, as set forth in 41 CFR Part 60-4 and its efforts to meet the goals established for the geographical area where the Contract is to be performed. The hours of minority and female employment and training must be substantially uniform throughout the length of the Contract, and in each trade, and the Contractor shall make a good faith effort to employ minorities and women evenly on each of his projects. The transfer of minority or female employees or trainees from Contractor to Contractor or from project to project for the sole purpose of meeting Contractor's goals shall be a violation of the Contract, the Executive Order, and the regulations in 41 CFR Part 60-4. Compliance with the goals will be measured against the total work hours performed.

Contractor shall provide written notification to the Director of the Federal Contract Compliance Programs within 10 working days of award of any construction subcontract in excess of $10,000 at any tier for construction work under the Contract resulting from this solicitation. The notifications shall list the name, address, and telephone number of the subcontractor; employer identifications number; estimated dollar amount of subcontract; estimated starting and completion dates of the subcontract; and the geographical area in which the Contract is to be performed.

Section 1.09 The Funding Agency not a party

This contract is expected to be funded in part with funds provided by the Funding Agency. Neither the Funding Agency, nor any of its departments, entities, or employees is a party to this contract.

Section 1.10 Energy Efficiency Clause

Contractor shall comply with mandatory standards and policies on energy efficiency contained in the Puerto Rico Energy Conservation plan issued in compliance with the Energy Policy and Conservation Act, Pub. L. 94-163.

Section 1.11 Anti-Kickback

Contractor shall comply with the Copeland Anti-kickback Act, 18USC874, 40USC276c, 29 CFR, Part 3, and shall be sure that all payroll deductions, if any, are those authorized by these regulations. The Act provides that Contractor shall be prohibited from inducing, by any means, any person employed in the construction, completion or repair of public facilities, to give up any part of the compensation to which they are otherwise entitled. PRASA shall report all suspected or reported violations to the Agency.

Section 1.12 Clean Air Act

Contractor agrees to comply with all applicable standards, order or regulations issued pursant to the Clean Air Act, 42USC7401 et seq., and the Federal Water Pollution Control Act as amended, 33USC1251 et seq., as amended. Violations shall be reported to the Regional Office of the Environmental Protection Agency.

Section 1.13 Conflict of Interest

Contractor may not knowingly contract with a supplier or manufacturer if the individual or entity that prepared the Construction Drawings and specifications has a corporate or financial affiliation with the supplier or manufacturer.

PRASA's officer's, employees, or agents shall not engage in the award or administration of this Contract if a conflict of interest, real or apparent, would be involved. Such a conflict would arise when: the employee, officer or agent; or any member of their immediate family; or their partners; or an organization that employs, or is about to employ, any of the above, has a financial interest in Contractor. PRASA's officers, employees, or agents shall neither solicit nor accept gratuities, favors or anything of monetary value from Contractor or subcontractors.

Section 1.14 Gratuities

If PRASA finds after a notice and hearing that Contractor or any of Contractor's agents or representative, offered or gave gratuities, in the form of entertainment, gifts, or otherwise, to any official, employee, or agent of the Funding Agency or PRASA in an attempt to secure this Contract or favorable treatment in awarding, amending, or making any determinations related to the performance of this Contract, PRASA may, by written notice to Contractor, terminate this Contract. PRASA may also pursue other rights and remedies that the law or this Contract provides. However, the existence of the facts on which PRASA bases such findings shall be an issue and may be reviewed in proceedings under the dispute resolution provisions of this contract.

In the event this contract is terminated as provided above, PRASA may pursue the same remedies against Contractor as it could pursue in the event of a breach of this contract by Contractor. As a penalty, in addition to any other damages to which it may be entitled by law, PRASA may pursue exemplary damages in an amount, as determined by PRASA, which shall not be less than three nor more than ten times the costs Contractor incurs in providing any such gratuities to any such officer or employee.

Section 1.15 Funding Agency Concurrency

Concurrency by the Funding Agency in the award of the contract is required before the contract is effective.

Section 1.16 US Government Requirements Supersede

This section applies when the Funding Agency is the Environmental Protection Agency, the Environmental Protection Agency and/or the Health Department.

PRASA and Contractor agree that the U.S. Government requirements supersede any conflicting provisions in this contract. Projects for the construction of treatment works under the Clean Water Act are subject to 40CFR35 Subpart E including the Required Provisions-Construction Contracts.

Section 1.17 Buy American

This section applies when the Funding Agency is the Environmental Protection Agency, the Federal Emergency Management Agency and/or the Health Department.

Section 215 of the Clean Water Act requires that contractors give preference for the use of domestic material in the construction of EPA funded treatment works.

1. Contractors must use domestic construction material in preference to nondomestic material if the domestic one is priced no more than 6 percent higher than the bid or offered price of the nondomestic material, including all costs of delivery to the construction site and any applicable duty, whether or not assessed. The recipient will normally base the computations on prices and costs in effect on the date of opening the proposals.

2. The award official may waive the Buy American provision based upon factors he considers relevant, including:

   a. Such use is not in the public interest;

   b. The cost is unreasonable;

   c. The Agency's available resources are not sufficient to implement the provision, subject to the Deputy Administrator's concurrence;

   d. The articles, material or supplies of the class or kind to be used or the articles, material or supplies from which they are manufactured are not mined, produced or manufactured in the United States in sufficient and reasonably available commercial quantities or satisfactory quality for the particular project; or

   e. Application of this provision is contrary to multilateral government procurement agreements, subject to the Deputy Administrator's concurrence.

3. All bidding documents, subagreements, and if appropriate, requests for proposals must contain the following "Buy American" provision: In accordance with section 215 of the Clean Water Act, 33 U.S.C. 1251 et seq., and implementing EPA regulations, the contractor agrees that preference will be given to domestic construction materials. Subcontractors, materialmen and suppliers are also subject to the performance of this subagreement.

Section 1.18 Violating Facilities Clause

This section applies when the Funding Agency is the Environmental Protection Agency, the Federal Emergency Management Agency and/or the Health Department.

Contracts in excess of $100,000 shall contain a provision which requires the contractor compliance with all applicable standards, order or requirements issued under Section 306 of the Clean Air Act, 42U.S.C. 1857(h), Section 508 of the Clean Water Act, 33 U.S.C. 1368, Executive Order 11738, and

EPA regulations, 40CFR Part 15, which prohibit the use under nonexempt Federal contract, grants or loans of facilities included on the EPA List of Violating Facilities.

Section 1.19 Debarment and Suspension

This section applies when the Funding Agency is the Environmental Protection Agency, the Federal Emergency Management Agency and/or the Health Department.

No contract shall be made to parties listed in the General Services Administration's (GSA) List of Parties Excluded from Federal Procurement or Nonprocurement Programs in accordance with the Executive Orders 12549 and 12689, "Debarment and Suspensions", and regulation 40CFR32, "Governmentwide Debarment and Suspension (Nonprocurement) and Governmentwide requirements for Drug-Free Workplace (Grants); Clean Air Act and Clean Water Act Ineligibility of facilities in performance of Federal Contracts, Grants and Loans." The GSA list contains the names of parties debarred, suspended, or otherwise excluded by agencies, and contractors declared ineligible under statutory or regulatory authority other than Executive Order 12549.

Section 1.20 New Restrictions on Lobbying

This section applies when the Funding Agency is the Environmental Protection Agency, the Federal Emergency Management Agency and/or the Health Department.

On projects exceeding $100,000 Contractor shall comply with 40CFR34 - New Restrictions on Lobbying, which is included in the Supplementary Content for Federal Projects of this document.

New Restrictions on Lobbying. Contractor shall sign and submit certification for "Certification Regarding Lobbying - Certification for Contracts, Grants, Loans and Cooperative Agreements". The certification applies only to the particular transaction under consideration; an applicant/grantee cannot prepare a "blanket" certification for all of its grant programs. The form is included in Article 3 of the Supplementary Instructions to Bidder titled "Forms" applicable when the Funding Agency is the Environmental Protection Agency, the Federal Emergency Management Agency and/or the Health Department, of the General Conditions.

On projects exceeding $100,000 Contractor shall sign and submit disclosure form "Disclosure of Lobbying Activities" if any funds other than Federal appropriated funds have or will be paid for lobbying in connection with the award. The form Disclosure of Lobbying Activities is included in the Article 3 of the Supplementary Instructions to Bidder titled "Forms" applicable when the Funding Agency is the Environmental Protection Agency, the Federal Emergency Management Agency and/or the Health Department, of the General Conditions.

The Supplementary Content of this document contains federal regulations on New Restrictions on Lobbying.

Section 1.21 Contract Administration Requirements for the Disadvantaged Business Enterprise (DBE) Program

The Department of Health and PRASA agree to comply with the requirements of EPA's Program for Utilization of Small, Minority and Women's Business Enterprises in procurement under assistance agreements, contained in 40 CFR, Part 33.

Pursuant to 40 CFR, Section 33.301, the Department of Health and PRASA agree to make the following good faith efforts whenever procuring construction, equipment, services and supplies under an assistance agreement, and to ensure that the Department of Health, PRASA, and prime contractors also comply. Records documenting compliance with the six good faith efforts shall be retained.

There are a number of provisions designed to prevent unfair practices that adversely affect DBEs. Those provisions are as follows:

- PRASA requires its prime contractor to pay its subcontractor for satisfactory performance no more than 30 days from the prime contractor's receipt of payment from PRASA.

- PRASA shall be notified in writing by its prime contractor prior to any termination of a DBE subcontractor for convenience by the prime contractor.

- If a DBE subcontractor fails to complete work under the subcontract for any reason, PRASA requires the prime contractor to employ the six good faith efforts if soliciting a replacement subcontractor. These six good faith efforts are as follows:

    1. Ensure DBEs are made aware of contracting opportunities to the fullest extent practicable through outreach and recruitment activities. For Indian Tribal, state and local government recipients, this will include placing DBEs on solicitation lists and soliciting them whenever they are potential sources.

    2. Make information on forthcoming opportunities available to DBEs and arrange time frames for contracts and establish delivery schedules, where the requirements permit, in a way that encourages and facilitates participation by DBEs in the competitive process. This includes, whenever possible, posting solicitations for bids or proposals for a minimum of 30 calendar days before the bid or proposal closing date.

.

    3. Consider in the contracting process whether firms competing for large contracts could subcontract with DBEs. For Indian Tribal, state and local government recipients, this will include dividing total requirements, when economically feasible, into smaller tasks or quantities to permit maximum participation by DBEs in the competitive process.

    4. Encourage contracting with a consortium of DBEs when a contract is too large for one of these firms to handle individually.

    5. Use the services and assistance of the Small Business Administration (SBE) and the Minority Business Development Agency of the Department of Commerce.

    6. If the prime contractor awards subcontracts, the prime contractor shall take the above steps.

- PRASA requires its prime contractor to employ the six good faith efforts even if the prime contractor has achieved its fair share objectives.

Intensionally left in blank

Section 1.22 RUS General Conditions

RUS Bulletin C-710

These General Conditions have been prepared for use with the Suggested Forms of Agreement Between Owner and Contractor Funding Agency Edition No. C-521 (2002 Edition). Their provisions are interrelated and a change in one may necessitate a change in the other. Comments concerning their usage are contained in the EJCDC Construction Documents, General and Instructions (No. C-001, 2002 Edition). For guidance in the preparation of Supplementary Conditions, see Guide to the Preparation of Supplementary Conditions (No. C-800, 2002 Edition).

GENERAL CONDITIONS

ARTICLE 1 – DEFINITIONS AND TERMINOLOGY

1.1 *Defined Terms*

A. Wherever used in the Bidding Requirements or Contract Documents and printed with initial capital letters, the terms listed below will have the meanings indicated which are applicable to both the singular and plural thereof. In addition to terms specifically defined, terms with initial capital letters in the Contract Documents include references to identified articles and paragraphs, and the titles of other documents or forms.

1. *Addenda* – Written or graphic instruments issued prior to the opening of Bids which clarify, correct, or change the Bidding Requirements or the proposed Contract Documents.

2. *Agency* – The Federal or state agency named as such in the Agreement.

3. *Agreement* – The written instrument which is evidence of the agreement between Owner and Contractor covering the Work.

4. Application for Payment – The form acceptable to Engineer which is to be used by Contractor during the course of the Work in requesting progress or final payments and which is to be accompanied by such supporting documentation as is required by the Contract Documents.

5. *Asbestos* – Any material that contains more than one percent asbestos and is friable or is releasing asbestos fibers into the air above current action levels established by the United States Occupational Safety and Health Administration.

6. *Bid* – The offer or proposal of a Bidder submitted on the prescribed form setting forth the prices for the Work to be performed.

7. *Bidder* – The individual or entity who submits a Bid directly to Owner.

8. *Bidding Documents* – The Bidding Requirements and the proposed Contract Documents (including all Addenda).

9. *Bidding Requirements* – The Advertisement or Invitation to Bid, Instructions to Bidders, bid security of acceptable form, if any, and the Bid Form with any supplements.

10. *Change Order* – A document recommended by Engineer which is signed by Contractor and Owner and Agency and authorizes an addition, deletion, or revision in the Work or an adjustment in the Contract Price or the Contract Times, issued on or after the Effective Date of the Agreement.

11. *Claim* – A demand or assertion by Owner or Contractor seeking an adjustment of Contract Price or Contract Times, or both, or other relief with respect to the terms of the Contract. A demand for money or services by a third party is not a Claim.

12. *Contract* – The entire and integrated written agreement between the Owner and Contractor concerning the Work. The Contract supersedes prior negotiations, representations, or agreements, whether written or oral.

13. *Contract Documents* – Those items so designated in the Agreement. Only printed or hard copies of the items listed in the Agreement are Contract Documents. Approved Shop Drawings, other Contractor's submittals, and the reports and drawings of subsurface and physical conditions are not Contract Documents.

14. *Contract Price* – The moneys payable by Owner to Contractor for completion of the Work in accordance with the Contract Documents as stated in the Agreement (subject to the provisions of Paragraph 11.03 in the case of Unit Price Work).

15. *Contract Times* – The number of days or the dates stated in the Agreement to: (i) achieve Milestones, if any, (ii) achieve Substantial Completion; and (iii) complete the Work so that it is ready for final payment as evidenced by Engineer's written recommendation of final payment.

16. *Contractor* – The individual or entity with whom Owner has entered into the Agreement.

17. *Cost of the Work* – See Paragraph 11.01.A for definition.

18. *Drawings* – That part of the Contract Documents prepared or approved by Engineer which graphically shows the scope, extent, and character of the Work to be performed by Contractor. Shop Drawings and other Contractor submittals are not Drawings as so defined.

19. *Effective Date of the Agreement* – The date indicated in the Agreement on which it becomes effective, but if no such date is indicated, it means the date on which the Agreement is signed and delivered by the last of the two parties to sign and deliver.

20. *Engineer* – The individual or entity named as such in the Agreement.

21. *Field Order* – A written order issued by Engineer which requires minor changes in the Work but which does not involve a change in the Contract Price or the Contract Times.

22. *General Requirements* – Sections of Division 1 of the Specifications. The General Requirements pertain to all sections of the Specifications.

23. *Hazardous Environmental Condition* – The presence at the Site of Asbestos, PCBs, Petroleum, Hazardous Waste, or Radioactive Material in such quantities or circumstances that may present a substantial danger to persons or property exposed thereto in connection with the Work.

24. *Hazardous Waste* – The term Hazardous Waste shall have the meaning provided in Section 1004 of the Solid Waste Disposal Act (42 USC Section 6903) as amended from time to time.

25. *Laws and Regulations; Laws or Regulations* – Any and all applicable laws, rules, regulations, ordinances, codes, and orders of any and all governmental bodies, agencies, authorities, and courts having jurisdiction.

26. *Liens* – Charges, security interests, or encumbrances upon Project funds, real property, or personal property.

27. *Milestone* – A principal event specified in the Contract Documents relating to an intermediate completion date or time prior to Substantial Completion of all the Work.

28. *Notice of Award* – The written notice by Owner to the Successful Bidder stating that upon timely compliance by the Successful Bidder with the conditions precedent listed therein, Owner will sign and deliver the Agreement.

29. *Notice to Proceed* – A written notice given by Owner to Contractor fixing the date on which the Contract Times will commence to run and on which Contractor shall start to perform the Work under the Contract Documents.

30. *Owner* – The individual or entity with whom Contractor has entered into the Agreement and for whom the Work is to be performed.

31. *PCBs* – Polychlorinated biphenyls.

32. *Petroleum* – Petroleum, including crude oil or any fraction thereof which is liquid at standard conditions of temperature and pressure (60 degrees Fahrenheit and 14.7 pounds per square inch absolute), such as oil, petroleum, fuel oil, oil sludge, oil refuse, gasoline, kerosene, and oil mixed with other non-Hazardous Waste and crude oils.

33. *Progress Schedule* – A schedule, prepared and maintained by Contractor, describing the sequence and duration of the activities comprising the Contractor's plan to accomplish the Work within the Contract Times.

34. *Project* – The total construction of which the Work to be performed under the Contract Documents may be the whole, or a part.

35. *Project Manual* – The bound documentary information prepared for bidding and constructing the Work. A listing of the contents of the Project Manual, which may be bound in one or more volumes, is contained in the table(s) of contents.

36. *Radioactive Material* – Source, special nuclear, or byproduct material as defined by the Atomic Energy Act of 1954 (42 USC Section 2011 et seq.) as amended from time to time.

37. *Related Entity* – An officer, director, partner, employee, agent, consultant, or subcontractor.

38. *Resident Project Representative* – The authorized representative of Engineer who may be assigned to the Site or any part thereof.

39. *Samples* – Physical examples of materials, equipment, or workmanship that are representative of some portion of the Work and which establish the standards by which such portion of the Work will be judged.

40. *Schedule of Submittals* – A schedule, prepared and maintained by Contractor, of required submittals and the time requirements to support scheduled performance of related construction activities.

41. *Schedule of Values* – A schedule, prepared and maintained by Contractor, allocating portions of the Contract Price to various portions of the Work and used as the basis for reviewing Contractor's Applications for Payment.

42. *Shop Drawings* – All drawings, diagrams, illustrations, schedules, and other data or information which are specifically prepared or assembled by or for Contractor and submitted by Contractor to illustrate some portion of the Work.

43. *Site* – Lands or areas indicated in the Contract Documents as being furnished by Owner upon which the Work is to be performed, including rights-of-way and easements for access thereto, and such other lands furnished by Owner which are designated for the use of Contractor.

44. *Specifications* – That part of the Contract Documents consisting of written requirements for materials, equipment, systems, standards and workmanship as applied to the Work, and certain administrative requirements and procedural matters applicable thereto.

45. *Subcontractor* – An individual or entity having a direct contract with Contractor or with any other Subcontractor for the performance of a part of the Work at the Site.

46. *Substantial Completion* – The time at which the Work (or a specified part thereof) has progressed to the point where, in the opinion of Engineer, the Work (or a specified part thereof) is sufficiently complete, in accordance with the Contract Documents, so that the Work (or a specified part thereof) can be utilized for the purposes for which it is intended. The terms "substantially complete" and "substantially completed" as applied to all or part of the Work refer to Substantial Completion thereof.

47. *Successful Bidder* – The Bidder submitting a responsive Bid to whom Owner makes an award.

48. *Supplementary Conditions* – That part of the Contract Documents which amends or supplements these General Conditions.

49. *Supplier* – A manufacturer, fabricator, supplier, distributor, materialman, or vendor having a direct contract with Contractor or with any Subcontractor to furnish materials or equipment to be incorporated in the Work by Contractor or any Subcontractor.

50. *Underground Facilities* – All underground pipelines, conduits, ducts, cables, wires, manholes, vaults, tanks, tunnels, or other such facilities or attachments, and any encasements containing such facilities, including those that convey electricity, gases, steam, liquid petroleum products, telephone or other communications, cable television, water, wastewater, storm water, other liquids or chemicals, or traffic or other control systems.

51. Unit Price Work – Work to be paid for on the basis of unit prices.

52. *Work* – The entire construction or the various separately identifiable parts thereof required to be provided under the Contract Documents. Work includes and is the result of performing or providing all labor, services, and documentation necessary to produce such construction, and furnishing, installing, and incorporating all materials and equipment into such construction, all as required by the Contract Documents.

53. *Work Change Directive* – A written statement to Contractor issued on or after the Effective Date of the Agreement and signed by Owner and Agency upon recommendation of the Engineer ordering an addition, deletion, or revision in the Work, or responding to differing or unforeseen subsurface or physical conditions under which the Work is to be performed or to emergencies. A Work Change Directive will not change the Contract Price or the Contract Times but is evidence that the parties expect that the change ordered or documented by a Work Change Directive will be incorporated in a subsequently issued Change Order following negotiations by the parties as to its effect, if any, on the Contract Price or Contract Times.

1.2 *Terminology*

A. The following words or terms are not defined but, when used in the Bidding Requirements or Contract Documents, have the following meaning.

B. *Intent of Certain Terms or Adjectives*

1. The Contract Documents include the terms “as allowed,” “as approved,” “as ordered”, “as directed” or terms of like effect or import to authorize an exercise of professional judgment by Engineer. In addition, the adjectives “reasonable,” “suitable,” “acceptable,” “proper,” “satisfactory,” or adjectives of like effect or import are used to describe an action or determination of Engineer as to the Work. It is intended that such exercise of professional judgment, action or determination will be solely to evaluate, in general, the Work for compliance with the requirements of and information in the Contract Documents and conformance with the design concept of the completed Project as a functioning whole as shown or indicated in the Contract Documents (unless there is a specific statement indicating otherwise). The use of any such term or adjective is not intended to and shall not be effective to assign to Engineer any duty or authority to supervise or direct the performance of the Work or any duty or authority to undertake responsibility contrary to the provisions of Paragraph 9.09 or any other provision of the Contract Documents.

C. *Day*

1. The word "day" means a calendar day of 24 hours measured from midnight to the next midnight.

D. *Defective*

1. The word "defective," when modifying the word "Work," refers to Work that is unsatisfactory, faulty, or deficient in that it:

a. does not conform to the Contract Documents, or

b. does not meet the requirements of any applicable inspection, reference standard, test, or approval referred to in the Contract Documents, or

c. has been damaged prior to Engineer's recommendation of final payment (unless responsibility for the protection thereof has been assumed by Owner at Substantial Completion in accordance with Paragraph 14.04 or 14.05).

E. *Furnish, Install, Perform, Provide*

1. The word "furnish," when used in connection with services, materials, or equipment, shall mean to supply and deliver said services, materials, or equipment to the Site (or some other specified location) ready for use or installation and in usable or operable condition.

2. The word "install," when used in connection with services, materials, or equipment, shall mean to put into use or place in final position said services, materials, or equipment complete and ready for intended use.

3. The words "perform" or "provide," when used in connection with services, materials, or equipment, shall mean to furnish and install said services, materials, or equipment complete and ready for intended use.

4. When "furnish," "install," "perform," or "provide" is not used in connection with services, materials, or equipment in a context clearly requiring an obligation of Contractor, "provide" is implied.

F. Unless stated otherwise in the Contract Documents, words or phrases which have a well-known technical or construction industry or trade meaning are used in the Contract Documents in accordance with such recognized meaning.

ARTICLE 2 – PRELIMINARY MATTERS

2.1 *Delivery of Bonds and Evidence of Insurance*

A. When Contractor delivers the executed counterparts of the Agreement to Owner, Contractor shall also deliver to Owner such bonds as Contractor may be required to furnish.

B. *Evidence of Insurance:* Before any Work at the Site is started, Contractor and Owner shall each deliver to the other, with copies to each additional insured identified in the Supplementary Conditions, certificates of insurance (and other evidence of insurance which either of them or

any additional insured may reasonably request) which Contractor and Owner respectively are required to purchase and maintain in accordance with Article 5.

2.2 *Copies of Documents*

A. Owner shall furnish to Contractor up to ten printed or hard copies of the Drawings and Project Manual. Additional copies will be furnished upon request at the cost of reproduction.

2.3 *Commencement of Contract Times; Notice to Proceed*

A. The Contract Times will commence to run on the thirtieth day after the Effective Date of the Agreement or, if a Notice to Proceed is given, on the day indicated in the Notice to Proceed. A Notice to Proceed may be given at any time within 30 days after the Effective Date of the Agreement.

2.4 *Starting the Work*

A. Contractor shall start to perform the Work on the date when the Contract Times commence to run. No Work shall be done at the Site prior to the date on which the Contract Times commence to run.

2.5 *Before Starting Construction*

A. *Preliminary Schedules:* Within 10 days after the Effective Date of the Agreement (unless otherwise specified in the General Requirements), Contractor shall submit to Engineer for timely review:

1. a preliminary Progress Schedule;

2. a preliminary Schedule of Submittals; and

3. a preliminary Schedule of Values for all of the Work which includes quantities and prices of items which when added together equal the Contract Price and subdivides the Work into component parts in sufficient detail to serve as the basis for progress payments during performance of the Work. Such prices will include an appropriate amount of overhead and profit applicable to each item of Work.

2.6 *Preconstruction Conference*

A. Before any Work at the Site is started, a conference attended by Owner, Contractor, Engineer, Agency, and others as appropriate will be held to establish a working understanding among the parties as to the Work and to discuss the schedules referred to in Paragraph 2.05.A, procedures for handling Shop Drawings and other submittals, processing Applications for Payment, and maintaining required records.

2.7 *Initial Acceptance of Schedules*

A. At least 10 days before submission of the first Application for Payment a conference attended by Contractor, Engineer, and others as appropriate will be held to review for acceptability to Engineer as provided below the schedules submitted in accordance with Paragraph 2.05.A.

Contractor shall have an additional 10 days to make corrections and adjustments and to complete and resubmit the schedules. No progress payment shall be made to Contractor until acceptable schedules are submitted to Engineer.

1. The Progress Schedule will be acceptable to Engineer if it provides an orderly progression of the Work to completion within the Contract Times. Such acceptance will not impose on Engineer responsibility for the Progress Schedule, for sequencing, scheduling, or progress of the Work nor interfere with or relieve Contractor from Contractor's full responsibility therefor.

2. Contractor's Schedule of Submittals will be acceptable to Engineer if it provides a workable arrangement for reviewing and processing the required submittals.

3. Contractor's Schedule of Values will be acceptable to Engineer as to form and substance if it provides a reasonable allocation of the Contract Price to component parts of the Work.

ARTICLE 3 – CONTRACT DOCUMENTS: INTENT, AMENDING, REUSE

3.1 *Intent*

A. The Contract Documents are complementary; what is required by one is as binding as if required by all.

B. It is the intent of the Contract Documents to describe a functionally complete Project (or part thereof) to be constructed in accordance with the Contract Documents. Any labor, documentation, services, materials, or equipment that may reasonably be inferred from the Contract Documents or from prevailing custom or trade usage as being required to produce the intended result will be provided whether or not specifically called for at no additional cost to Owner.

C. Clarifications and interpretations of the Contract Documents shall be issued by Engineer as provided in Article 9.

3.2 *Reference Standards*

A. *Standards, Specifications, Codes, Laws, and Regulations*

1. Reference to standards, specifications, manuals, or codes of any technical society, organization, or association, or to Laws or Regulations, whether such reference be specific or by implication, shall mean the standard, specification, manual, code, or Laws or Regulations in effect at the time of opening of Bids (or on the Effective Date of the Agreement if there were no Bids), except as may be otherwise specifically stated in the Contract Documents.

2. No provision of any such standard, specification, manual or code, or any instruction of a Supplier shall be effective to change the duties or responsibilities of Owner, Contractor, or Engineer, or any of their subcontractors, consultants, agents, or employees from those set forth in the Contract Documents. No such provision or instruction shall be effective to assign to Owner, or Engineer, or any of their Related Entities, any duty or authority to

supervise or direct the performance of the Work or any duty or authority to undertake responsibility inconsistent with the provisions of the Contract Documents.

3.3 *Reporting and Resolving Discrepancies*

A. Reporting Discrepancies

1. *Contractor's Review of Contract Documents Before Starting Work*: Before undertaking each part of the Work, Contractor shall carefully study and compare the Contract Documents and check and verify pertinent figures therein and all applicable field measurements. Contractor shall promptly report in writing to Engineer any conflict, error, ambiguity, or discrepancy which Contractor may discover and shall obtain a written interpretation or clarification from Engineer before proceeding with any Work affected thereby.

2. *Contractor's Review of Contract Documents During Performance of Work*: If, during the performance of the Work, Contractor discovers any conflict, error, ambiguity, or discrepancy within the Contract Documents or between the Contract Documents and any provision of any Law or Regulation applicable to the performance of the Work or of any standard, specification, manual or code, or of any instruction of any Supplier, Contractor shall promptly report it to Engineer in writing. Contractor shall not proceed with the Work affected thereby (except in an emergency as required by Paragraph 6.16.A) until an amendment or supplement to the Contract Documents has been issued by one of the methods indicated in Paragraph 3.04.

3. Contractor shall not be liable to Owner or Engineer for failure to report any conflict, error, ambiguity, or discrepancy in the Contract Documents unless Contractor knew or reasonably should have known thereof.

B. Resolving Discrepancies

1. Except as may be otherwise specifically stated in the Contract Documents, the provisions of the Contract Documents shall take precedence in resolving any conflict, error, ambiguity, or discrepancy between the provisions of the Contract Documents and:

a. the provisions of any standard, specification, manual, code, or instruction (whether or not specifically incorporated by reference in the Contract Documents); or

b. the provisions of any Laws or Regulations applicable to the performance of the Work (unless such an interpretation of the provisions of the Contract Documents would result in violation of such Law or Regulation).

3.4 *Amending and Supplementing Contract Documents*

A. The Contract Documents may be amended to provide for additions, deletions, and revisions in the Work or to modify the terms and conditions thereof by either a Change Order or a Work Change Directive.

B. The requirements of the Contract Documents may be supplemented, and minor variations and deviations in the Work may be authorized, by one or more of the following ways:

1. A Field Order;

2. Engineer's approval of a Shop Drawing or Sample; (Subject to the provisions of Paragraph 6.17.D.3) or

3. Engineer's written interpretation or clarification.

3.5 *Reuse of Documents*

A. Contractor and any Subcontractor or Supplier shall not:

1. have or acquire any title to or ownership rights in any of the Drawings, Specifications, or other documents (or copies of any thereof) prepared by or bearing the seal of Engineer or Engineer's consultants, including electronic media editions; or

2. reuse any of such Drawings, Specifications, other documents, or copies thereof on extensions of the Project or any other project without written consent of Owner and Engineer and specific written verification or adaption by Engineer.

B. The prohibition of this Paragraph 3.05 will survive final payment, or termination of the Contract. Nothing herein shall preclude Contractor from retaining copies of the Contract Documents for record purposes.

3.6 *Electronic Data*

A. Copies of data furnished by Owner or Engineer to Contractor or Contractor to Owner or Engineer that may be relied upon are limited to the printed copies (also known as hard copies). Files in electronic media format of text, data, graphics, or other types are furnished only for the convenience of the receiving party. Any conclusion or information obtained or derived from such electronic files will be at the user's sole risk. If there is a discrepancy between the electronic files and the hard copies, the hard copies govern.

B. Because data stored in electronic media format can deteriorate or be modified inadvertently or otherwise without authorization of the data's creator, the party receiving electronic files agrees that it will perform acceptance tests or procedures within 60 days, after which the receiving party shall be deemed to have accepted the data thus transferred. Any errors detected within the 60-day acceptance period will be corrected by the transferring party.

C. When transferring documents in electronic media format, the transferring party makes no representations as to long term compatibility, usability, or readability of documents resulting from the use of software application packages, operating systems, or computer hardware differing from those used by the data's creator.

ARTICLE 4 – AVAILABILITY OF LANDS; SUBSURFACE AND PHYSICAL CONDITIONS; HAZARDOUS ENVIRONMENTAL CONDITIONS; REFERENCE POINTS

4.1 *Availability of Lands*

A. Owner shall furnish the Site. Owner shall notify Contractor of any encumbrances or restrictions not of general application but specifically related to use of the Site with which Contractor must

comply in performing the Work. Owner will obtain in a timely manner and pay for easements for permanent structures or permanent changes in existing facilities. If Contractor and Owner are unable to agree on entitlement to or on the amount or extent, if any, of any adjustment in the Contract Price or Contract Times, or both, as a result of any delay in Owner's furnishing the Site or a part thereof, Contractor may make a Claim therefor as provided in Paragraph 10.05.

B. Upon reasonable written request, Owner shall furnish Contractor with a current statement of record legal title and legal description of the lands upon which the Work is to be performed and Owner's interest therein as necessary for giving notice of or filing a mechanic's or construction lien against such lands in accordance with applicable Laws and Regulations.

C. Contractor shall provide for all additional lands and access thereto that may be required for temporary construction facilities or storage of materials and equipment.

4.2 *Subsurface and Physical Conditions*

A. *Reports and Drawings:* The Supplementary Conditions identify:

1. those reports of explorations and tests of subsurface conditions at or contiguous to the Site that Engineer has used in preparing the Contract Documents; and

2. those drawings of physical conditions in or relating to existing surface or subsurface structures at or contiguous to the Site (except Underground Facilities) that Engineer has used in preparing the Contract Documents.

B. *Limited Reliance by Contractor on Technical Data Authorized:* Contractor may rely upon the general accuracy of the "technical data" contained in such reports and drawings, but such reports and drawings are not Contract Documents. Such "technical data" is identified in the Supplementary Conditions. Except for such reliance on such "technical data," Contractor may not rely upon or make any claim against Owner or Engineer, or any of their Related Entities with respect to:

1. the completeness of such reports and drawings for Contractor's purposes, including, but not limited to, any aspects of the means, methods, techniques, sequences, and procedures of construction to be employed by Contractor, and safety precautions and programs incident thereto; or

2. other data, interpretations, opinions, and information contained in such reports or shown or indicated in such drawings; or

3. any Contractor interpretation of or conclusion drawn from any "technical data" or any such other data, interpretations, opinions, or information.

4.3 *Differing Subsurface or Physical Conditions*

A. *Notice:* If Contractor believes that any subsurface or physical condition at or contiguous to the Site that is uncovered or revealed either:

1. is of such a nature as to establish that any "technical data" on which Contractor is entitled to rely as provided in Paragraph 4.02 is materially inaccurate; or

2. is of such a nature as to require a change in the Contract Documents; or

3. differs materially from that shown or indicated in the Contract Documents; or

4. is of an unusual nature, and differs materially from conditions ordinarily encountered and generally recognized as inherent in work of the character provided for in the Contract Documents;

then Contractor shall, promptly after becoming aware thereof and before further disturbing the subsurface or physical conditions or performing any Work in connection therewith (except in an emergency as required by Paragraph 6.16.A), notify Owner and Engineer in writing about such condition. Contractor shall not further disturb such condition or perform any Work in connection therewith (except as aforesaid) until receipt of written order to do so.

B. *Engineer's Review*: After receipt of written notice as required by Paragraph 4.03.A, Engineer will promptly review the pertinent condition, determine the necessity of Owner's obtaining additional exploration or tests with respect thereto, and advise Owner in writing (with a copy to Contractor) of Engineer's findings and conclusions.

C. *Possible Price and Times Adjustments*

1. The Contract Price or the Contract Times, or both, will be equitably adjusted to the extent that the existence of such differing subsurface or physical condition causes an increase or decrease in Contractor's cost of, or time required for, performance of the Work; subject, however, to the following:

   a. such condition must meet any one or more of the categories described in Paragraph 4.03.A; and

   b. with respect to Work that is paid for on a Unit Price Basis, any adjustment in Contract Price will be subject to the provisions of Paragraphs 9.07 and 11.03.

2. Contractor shall not be entitled to any adjustment in the Contract Price or Contract Times if:

   a. Contractor knew of the existence of such conditions at the time Contractor made a final commitment to Owner with respect to Contract Price and Contract Times by the submission of a Bid or becoming bound under a negotiated contract; or

   b. the existence of such condition could reasonably have been discovered or revealed as a result of any examination, investigation, exploration, test, or study of the Site and contiguous areas required by the Bidding Requirements or Contract Documents to be conducted by or for Contractor prior to Contractor's making such final commitment; or

   c. Contractor failed to give the written notice as required by Paragraph 4.03.A.

3. If Owner and Contractor are unable to agree on entitlement to or on the amount or extent, if any, of any adjustment in the Contract Price or Contract Times, or both, a Claim may be made therefor as provided in Paragraph 10.05. However, Owner and Engineer, and any of their Related Entities shall not be liable to Contractor for any claims, costs, losses, or damages (including but not limited to all fees and charges of engineers, architects, attorneys, and other professionals and all court or arbitration or other dispute resolution costs) sustained by Contractor on or in connection with any other project or anticipated project.

4.4 *Underground Facilities*

A. *Shown or Indicated:* The information and data shown or indicated in the Contract Documents with respect to existing Underground Facilities at or contiguous to the Site is based on information and data furnished to Owner or Engineer by the owners of such Underground Facilities, including Owner, or by others. Unless it is otherwise expressly provided in the Supplementary Conditions:

1. Owner and Engineer shall not be responsible for the accuracy or completeness of any such information or data; and

2. the cost of all of the following will be included in the Contract Price, and Contractor shall have full responsibility for:

a. reviewing and checking all such information and data,

b. locating all Underground Facilities shown or indicated in the Contract Documents,

c. coordination of the Work with the owners of such Underground Facilities, including Owner, during construction, and

d. the safety and protection of all such Underground Facilities and repairing any damage thereto resulting from the Work.

B. *Not Shown or Indicated*

1. If an Underground Facility is uncovered or revealed at or contiguous to the Site which was not shown or indicated, or not shown or indicated with reasonable accuracy in the Contract Documents, Contractor shall, promptly after becoming aware thereof and before further disturbing conditions affected thereby or performing any Work in connection therewith (except in an emergency as required by Paragraph 6.16.A), identify the owner of such Underground Facility and give written notice to that owner and to Owner and Engineer. Engineer will promptly review the Underground Facility and determine the extent, if any, to which a change is required in the Contract Documents to reflect and document the consequences of the existence or location of the Underground Facility. During such time, Contractor shall be responsible for the safety and protection of such Underground Facility.

2. If Engineer concludes that a change in the Contract Documents is required, a Work Change Directive or a Change Order will be issued to reflect and document such consequences. An equitable adjustment shall be made in the Contract Price or Contract Times, or both, to the extent that they are attributable to the existence or location of any Underground Facility

that was not shown or indicated or not shown or indicated with reasonable accuracy in the Contract Documents and that Contractor did not know of and could not reasonably have been expected to be aware of or to have anticipated. If Owner and Contractor are unable to agree on entitlement to or on the amount or extent, if any, of any such adjustment in Contract Price or Contract Times, Owner or Contractor may make a Claim therefor as provided in Paragraph 10.05.

4.5 *Reference Points*

A. Owner shall provide engineering surveys to establish reference points for construction which in Engineer's judgment are necessary to enable Contractor to proceed with the Work. Contractor shall be responsible for laying out the Work, shall protect and preserve the established reference points and property monuments, and shall make no changes or relocations without the prior written approval of Owner. Contractor shall report to Engineer whenever any reference point or property monument is lost or destroyed or requires relocation because of necessary changes in grades or locations, and shall be responsible for the accurate replacement or relocation of such reference points or property monuments by professionally qualified personnel.

4.6 *Hazardous Environmental Condition at Site*

A. *Reports and Drawings:* Reference is made to the Supplementary Conditions for the identification of those reports and drawings relating to a Hazardous Environmental Condition identified at the Site, if any, that have been utilized by the Engineer in the preparation of the Contract Documents.

B. *Limited Reliance by Contractor on Technical Data Authorized:* Contractor may rely upon the general accuracy of the "technical data" contained in such reports and drawings, but such reports and drawings are not Contract Documents. Such "technical data" is identified in the Supplementary Conditions. Except for such reliance on such "technical data," Contractor may not rely upon or make any claim against Owner or Engineer, or any of their Related Entities with respect to:

1. the completeness of such reports and drawings for Contractor's purposes, including, but not limited to, any aspects of the means, methods, techniques, sequences and procedures of construction to be employed by Contractor and safety precautions and programs incident thereto; or

2. other data, interpretations, opinions and information contained in such reports or shown or indicated in such drawings; or

3. any Contractor interpretation of or conclusion drawn from any "technical data" or any such other data, interpretations, opinions or information.

C. Contractor shall not be responsible for any Hazardous Environmental Condition uncovered or revealed at the Site which was not shown or indicated in Drawings or Specifications or identified in the Contract Documents to be within the scope of the Work. Contractor shall be responsible for a Hazardous Environmental Condition created with any materials brought to the

Site by Contractor, Subcontractors, Suppliers, or anyone else for whom Contractor is responsible.

D. If Contractor encounters a Hazardous Environmental Condition or if Contractor or anyone for whom Contractor is responsible creates a Hazardous Environmental Condition, Contractor shall immediately: (i) secure or otherwise isolate such condition; (ii) stop all Work in connection with such condition and in any area affected thereby (except in an emergency as required by Paragraph 6.16.A); and (iii) notify Owner and Engineer (and promptly thereafter confirm such notice in writing). Owner shall promptly consult with Engineer concerning the necessity for Owner to retain a qualified expert to evaluate such condition or take corrective action, if any.

E. Contractor shall not be required to resume Work in connection with such condition or in any affected area until after Owner has obtained any required permits related thereto and delivered to Contractor written notice: (i) specifying that such condition and any affected area is or has been rendered safe for the resumption of Work; or (ii) specifying any special conditions under which such Work may be resumed safely. If Owner and Contractor cannot agree as to entitlement to or on the amount or extent, if any, of any adjustment in Contract Price or Contract Times, or both, as a result of such Work stoppage or such special conditions under which Work is agreed to be resumed by Contractor, either party may make a Claim therefor as provided in Paragraph 10.05.

F. If after receipt of such written notice Contractor does not agree to resume such Work based on a reasonable belief it is unsafe, or does not agree to resume such Work under such special conditions, then Owner may order the portion of the Work that is in the area affected by such condition to be deleted from the Work. If Owner and Contractor cannot agree as to entitlement to or on the amount or extent, if any, of an adjustment in Contract Price or Contract Times as a result of deleting such portion of the Work, then either party may make a Claim therefor as provided in Paragraph 10.05. Owner may have such deleted portion of the Work performed by Owner's own forces or others in accordance with Article 7.

G. To the fullest extent permitted by Laws and Regulations, Owner shall indemnify and hold harmless Contractor, Subcontractors, and Engineer, and the officers, directors, partners, employees, agents, consultants, and subcontractors of each and any of them from and against all claims, costs, losses, and damages (including but not limited to all fees and charges of engineers, architects, attorneys, and other professionals and all court or arbitration or other dispute resolution costs) arising out of or relating to a Hazardous Environmental Condition, provided that such Hazardous Environmental Condition: (i) was not shown or indicated in the Drawings or Specifications or identified in the Contract Documents to be included within the scope of the Work, and (ii) was not created by Contractor or by anyone for whom Contractor is responsible. Nothing in this Paragraph 4.06.G shall obligate Owner to indemnify any individual or entity from and against the consequences of that individual's or entity's own negligence.

H. To the fullest extent permitted by Laws and Regulations, Contractor shall indemnify and hold harmless Owner and Engineer, and the officers, directors, partners, employees, agents, consultants, and subcontractors of each and any of them from and against all claims, costs, losses, and damages (including but not limited to all fees and charges of engineers, architects, attorneys, and other professionals and all court or arbitration or other dispute resolution costs)

arising out of or relating to a Hazardous Environmental Condition created by Contractor or by anyone for whom Contractor is responsible. Nothing in this Paragraph 4.06. H shall obligate Contractor to indemnify any individual or entity from and against the consequences of that individual's or entity's own negligence.

I. The provisions of Paragraphs 4.02, 4.03, and 4.04 do not apply to a Hazardous Environmental Condition uncovered or revealed at the Site.

ARTICLE 5 – BONDS AND INSURANCE

5.1 *Performance, Payment, and Other Bonds*

A. Contractor shall furnish performance and payment bonds, each in an amount at least equal to the Contract Price as security for the faithful performance and payment of all of Contractor's obligations under the Contract Documents. These bonds shall remain in effect until one year after the date when final payment becomes due or until completion of the correction period specified in Paragraph 13.07, whichever is later, except as provided otherwise by Laws or Regulations or by the Contract Documents. Contractor shall also furnish such other bonds as are required by the Contract Documents.

B. All bonds shall be in the form prescribed by the Contract Documents except as provided otherwise by Laws or Regulations, and shall be executed by such sureties as are named in the current list of "Companies Holding Certificates of Authority as Acceptable Sureties on Federal Bonds and as Acceptable Reinsuring Companies" as published in Circular 570 (amended) by the Financial Management Service, Surety Bond Branch, U.S. Department of the Treasury. All bonds signed by an agent must be accompanied by a certified copy of the agent's authority to act.

C. If the surety on any bond furnished by Contractor is declared bankrupt or becomes insolvent or its right to do business is terminated in any state where any part of the Project is located or it ceases to meet the requirements of Paragraph 5.01.B, Contractor shall promptly notify Owner and Engineer and shall, within 20 days after the event giving rise to such notification, provide another bond and surety, both of which shall comply with the requirements of Paragraphs 5.01.B and 5.02.

5.2 *Licensed Sureties and Insurers*

A. All bonds and insurance required by the Contract Documents to be purchased and maintained by Owner or Contractor shall be obtained from surety or insurance companies that are duly licensed or authorized in the jurisdiction in which the Project is located to issue bonds or insurance policies for the limits and coverages so required. Such surety and insurance companies shall also meet such additional requirements and qualifications as may be provided in the Supplementary Conditions.

5.3 *Certificates of Insurance*

A. Contractor shall deliver to Owner, with copies to each additional insured identified in the Supplementary Conditions, certificates of insurance (and other evidence of insurance requested

by Owner or any other additional insured) which Contractor is required to purchase and maintain.

B. Owner shall deliver to Contractor, with copies to each additional insured identified in the Supplementary Conditions, certificates of insurance (and other evidence of insurance requested by Contractor or any other additional insured) which Owner is required to purchase and maintain.

5.4 *Contractor's Liability Insurance*

A. Contractor shall purchase and maintain such liability and other insurance as is appropriate for the Work being performed and as will provide protection from claims set forth below which may arise out of or result from Contractor's performance of the Work and Contractor's other obligations under the Contract Documents, whether it is to be performed by Contractor, any Subcontractor or Supplier, or by anyone directly or indirectly employed by any of them to perform any of the Work, or by anyone for whose acts any of them may be liable:

1. claims under workers' compensation, disability benefits, and other similar employee benefit acts;

2. claims for damages because of bodily injury, occupational sickness or disease, or death of Contractor's employees;

3. claims for damages because of bodily injury, sickness or disease, or death of any person other than Contractor's employees;

4. claims for damages insured by reasonably available personal injury liability coverage which are sustained:

   a. by any person as a result of an offense directly or indirectly related to the employment of such person by Contractor, or

   b. by any other person for any other reason;

5. claims for damages, other than to the Work itself, because of injury to or destruction of tangible property wherever located, including loss of use resulting therefrom; and

6. claims for damages because of bodily injury or death of any person or property damage arising out of the ownership, maintenance or use of any motor vehicle.

B. The policies of insurance required by this Paragraph 5.04 shall:

1. with respect to insurance required by Paragraphs 5.04.A.3 through 5.04.A.6 inclusive, include as additional insureds (subject to any customary exclusion regarding professional liability) Owner and Engineer, and any other individuals or entities identified in the Supplementary Conditions, all of whom shall be listed as additional insureds, and include coverage for the respective officers, directors, partners, employees, agents, consultants and subcontractors of each and any of all such additional insureds, and the insurance afforded to these additional insureds shall provide primary coverage for all claims covered thereby;

2. include at least the specific coverages and be written for not less than the limits of liability provided in the Supplementary Conditions or required by Laws or Regulations, whichever is greater;

3. include completed operations insurance;

4. include contractual liability insurance covering Contractor's indemnity obligations under Paragraphs 6.11 and 6.20;

5. contain a provision or endorsement that the coverage afforded will not be canceled, materially changed or renewal refused until at least 30 days prior written notice has been given to Owner and Contractor and to each other additional insured identified in the Supplementary Conditions to whom a certificate of insurance has been issued (and the certificates of insurance furnished by the Contractor pursuant to Paragraph 5.03 will so provide);

6. remain in effect at least until final payment and at all times thereafter when Contractor may be correcting, removing, or replacing defective Work in accordance with Paragraph 13.07; and

7. with respect to completed operations insurance, and any insurance coverage written on a claims-made basis, remain in effect for at least two years after final payment.

    a. Contractor shall furnish Owner and each other additional insured identified in the Supplementary Conditions, to whom a certificate of insurance has been issued, evidence satisfactory to Owner and any such additional insured of continuation of such insurance at final payment and one year thereafter.

5.5 *Owner's Liability Insurance*

A. In addition to the insurance required to be provided by Contractor under Paragraph 5.04, Owner, at Owner's option, may purchase and maintain at Owner's expense Owner's own liability insurance as will protect Owner against claims which may arise from operations under the Contract Documents.

5.6 *Property Insurance*

A. Unless otherwise provided in the Supplementary Conditions, Contractor shall purchase and maintain property insurance upon the Work at the Site in the amount of the full replacement cost thereof (Contractor shall be responsible for any deductible or self-insured retention.). This insurance shall:

1. include the interests of Owner, Contractor, Subcontractors, and Engineer, and any other individuals or entities identified in the Supplementary Conditions, and the officers, directors, partners, employees, agents, consultants and subcontractors of any of them, each of whom is deemed to have an insurable interest and shall be listed as an insured or additional insured;

2. be written on a Builder's Risk "all-risk" or open peril or special causes of loss policy form that shall at least include insurance for physical loss or damage to the Work, temporary

buildings, falsework, and materials and equipment in transit, and shall insure against at least the following perils or causes of loss: fire, lightning, extended coverage, theft, vandalism and malicious mischief, earthquake, collapse, debris removal, demolition occasioned by enforcement of Laws and Regulations, water damage (other than caused by flood), and such other perils or causes of loss as may be specifically required by the Supplementary Conditions;

3. include expenses incurred in the repair or replacement of any insured property (including but not limited to fees and charges of engineers and architects);

4. cover materials and equipment stored at the Site or at another location that was agreed to in writing by Owner prior to being incorporated in the Work, provided that such materials and equipment have been included in an Application for Payment recommended by Engineer;

5. allow for partial utilization of the Work by Owner;

6. include testing and startup; and

7. be maintained in effect until final payment is made unless otherwise agreed to in writing by Owner, Contractor, and Engineer with 30 days written notice to each other additional insured to whom a certificate of insurance has been issued.

B. Contractor shall purchase and maintain such boiler and machinery insurance or additional property insurance as may be required by the Supplementary Conditions or Laws and Regulations which will include the interests of Owner, Contractor, Subcontractors, and Engineer, and any other individuals or entities identified in the Supplementary Conditions, and the officers, directors, partners, employees, agents, consultants and subcontractors of each and any of them, each of whom is deemed to have an insurable interest and shall be listed as an insured or additional insured.

C. All the policies of insurance (and the certificates or other evidence thereof) required to be purchased and maintained in accordance with Paragraph 5.06 will contain a provision or endorsement that the coverage afforded will not be canceled or materially changed or renewal refused until at least 30 days prior written notice has been given to Owner and Contractor and to each other additional insured to whom a certificate of insurance has been issued and will contain waiver provisions in accordance with Paragraph 5.07.

D. Owner shall not be responsible for purchasing and maintaining any property insurance specified in this Paragraph 5.06 to protect the interests of Contractor, Subcontractors, or others in the Work to the extent of any deductible amounts that are identified in the Supplementary Conditions. The risk of loss within such identified deductible amount will be borne by Contractor, Subcontractors, or others suffering any such loss, and if any of them wishes property insurance coverage within the limits of such amounts, each may purchase and maintain it at the purchaser's own expense.

5.7 *Waiver of Rights*

A. Owner and Contractor intend that all policies purchased in accordance with Paragraph 5.06 will protect Owner, Contractor, Subcontractors, and Engineer, and all other individuals or entities

identified in the Supplementary Conditions to be listed as insureds or additional insureds (and the officers, directors, partners, employees, agents, consultants and subcontractors of each and any of them) in such policies and will provide primary coverage for all losses and damages caused by the perils or causes of loss covered thereby. All such policies shall contain provisions to the effect that in the event of payment of any loss or damage the insurers will have no rights of recovery against any of the insureds or additional insureds thereunder. Owner and Contractor waive all rights against each other and their respective officers, directors, partners, employees, agents, consultants and subcontractors of each and any of them for all losses and damages caused by, arising out of or resulting from any of the perils or causes of loss covered by such policies and any other property insurance applicable to the Work; and, in addition, waive all such rights against Subcontractors, and Engineer, and all other individuals or entities identified in the Supplementary Conditions to be listed as insured or additional insured (and the officers, directors, partners, employees, agents, consultants and subcontractors of each and any of them) under such policies for losses and damages so caused. None of the above waivers shall extend to the rights that any party making such waiver may have to the proceeds of insurance held by Contractor as trustee or otherwise payable under any policy so issued.

B. Owner waives all rights against Contractor, Subcontractors, and Engineer, and the officers, directors, partners, employees, agents, consultants and subcontractors of each and any of them for:

1. loss due to business interruption, loss of use, or other consequential loss extending beyond direct physical loss or damage to Owner's property or the Work caused by, arising out of, or resulting from fire or other perils whether or not insured by Owner; and

2. loss or damage to the completed Project or part thereof caused by, arising out of, or resulting from fire or other insured peril or cause of loss covered by any property insurance maintained on the completed Project or part thereof by Owner during partial utilization pursuant to Paragraph 14.05, after Substantial Completion pursuant to Paragraph 14.04, or after final payment pursuant to Paragraph 14.07.

C. Any insurance policy maintained by Owner covering any loss, damage or consequential loss referred to in Paragraph 5.07.B shall contain provisions to the effect that in the event of payment of any such loss, damage, or consequential loss, the insurers will have no rights of recovery against Contractor, Subcontractors, or Engineer, and the officers, directors, partners, employees, agents, consultants and subcontractors of each and any of them.

5.8 *Receipt and Application of Insurance Proceeds*

A. Any insured loss under the policies of insurance required by Paragraph 5.06 will be adjusted with Contractor and made payable to Contractor as fiduciary for the insureds, as their interests may appear, subject to the requirements of any applicable mortgage clause and of Paragraph 5.08.B. Contractor shall deposit in a separate account any money so received and shall distribute it in accordance with such agreement as the parties in interest may reach. If no other special agreement is reached, the damaged Work shall be repaired or replaced, the moneys so received applied on account thereof.

B. Contractor as fiduciary shall have power to adjust and settle any loss with the insurers unless one of the parties in interest shall object in writing within 15 days after the occurrence of loss to Contractor's exercise of this power. If such objection be made, Contractor as fiduciary shall make settlement with the insurers in accordance with such agreement as the parties in interest may reach. If no such agreement among the parties in interest is reached, Contractor as fiduciary shall adjust and settle the loss with the insurers and, if required in writing by any party in interest, Contractor as fiduciary shall give bond for the proper performance of such duties.

5.9 *Acceptance of Bonds and Insurance; Option to Replace*

A. If either Owner or Contractor has any objection to the coverage afforded by or other provisions of the bonds or insurance required to be purchased and maintained by the other party in accordance with Article 5 on the basis of non-conformance with the Contract Documents, the objecting party shall so notify the other party in writing within 10 days after receipt of the certificates (or other evidence requested) required by Paragraph 2.01.B. Owner and Contractor shall each provide to the other such additional information in respect of insurance provided as the other may reasonably request. If either party does not purchase or maintain all of the bonds and insurance required of such party by the Contract Documents, such party shall notify the other party in writing of such failure to purchase prior to the start of the Work, or of such failure to maintain prior to any change in the required coverage. Without prejudice to any other right or remedy, the other party may elect to obtain equivalent bonds or insurance to protect such other party's interests at the expense of the party who was required to provide such coverage, and a Change Order shall be issued to adjust the Contract Price accordingly.

5.10 *Partial Utilization, Acknowledgment of Property Insurer*

A. If Owner finds it necessary to occupy or use a portion or portions of the Work prior to Substantial Completion of all the Work as provided in Paragraph 14.05, no such use or occupancy shall commence before the insurers providing the property insurance pursuant to Paragraph 5.06 have acknowledged notice thereof and in writing effected any changes in coverage necessitated thereby. The insurers providing the property insurance shall consent by endorsement on the policy or policies, but the property insurance shall not be canceled or permitted to lapse on account of any such partial use or occupancy.

ARTICLE 6 – CONTRACTOR'S RESPONSIBILITIES

6.1 *Supervision and Superintendence*

A. Contractor shall supervise, inspect, and direct the Work competently and efficiently, devoting such attention thereto and applying such skills and expertise as may be necessary to perform the Work in accordance with the Contract Documents. Contractor shall be solely responsible for the means, methods, techniques, sequences, and procedures of construction. Contractor shall not be responsible for the negligence of Owner or Engineer in the design or specification of a specific means, method, technique, sequence, or procedure of construction which is shown or indicated in and expressly required by the Contract Documents.

B. At all times during the progress of the Work, Contractor shall assign a competent resident superintendent who shall not be replaced without written notice to Owner and Engineer except

under extraordinary circumstances. The superintendent will be Contractor's representative at the Site and shall have authority to act on behalf of Contractor. All communications given to or received from the superintendent shall be binding on Contractor.

6.2 *Labor; Working Hours*

A. Contractor shall provide competent, suitably qualified personnel to survey and lay out the Work and perform construction as required by the Contract Documents. Contractor shall at all times maintain good discipline and order at the Site.

B. Except as otherwise required for the safety or protection of persons or the Work or property at the Site or adjacent thereto, and except as otherwise stated in the Contract Documents, all Work at the Site shall be performed during regular working hours. Contractor will not permit the performance of Work on a Saturday, Sunday, or any legal holiday without Owner's written consent (which will not be unreasonably withheld) given after prior written notice to Engineer.

6.3 *Services, Materials, and Equipment*

A. Unless otherwise specified in the Contract Documents, Contractor shall provide and assume full responsibility for all services, materials, equipment, labor, transportation, construction equipment and machinery, tools, appliances, fuel, power, light, heat, telephone, water, sanitary facilities, temporary facilities, and all other facilities and incidentals necessary for the performance, testing, start-up, and completion of the Work.

B. All materials and equipment incorporated into the Work shall be as specified or, if not specified, shall be of good quality and new, except as otherwise provided in the Contract Documents. All special warranties and guarantees required by the Specifications shall expressly run to the benefit of Owner. If required by Engineer, Contractor shall furnish satisfactory evidence (including reports of required tests) as to the source, kind, and quality of materials and equipment.

C. All materials and equipment shall be stored, applied, installed, connected, erected, protected, used, cleaned, and conditioned in accordance with instructions of the applicable Supplier, except as otherwise may be provided in the Contract Documents.

6.4 *Progress Schedule*

A. Contractor shall adhere to the Progress Schedule established in accordance with Paragraph 2.07 as it may be adjusted from time to time as provided below.

1. Contractor shall submit to Engineer for acceptance (to the extent indicated in Paragraph 2.07) proposed adjustments in the Progress Schedule that will not result in changing the Contract Times. Such adjustments will comply with any provisions of the General Requirements applicable thereto.

2. Proposed adjustments in the Progress Schedule that will change the Contract Times shall be submitted in accordance with the requirements of Article 12. Adjustments in Contract Times may only be made by a Change Order.

6.5 *Substitutes and "Or-Equals"*

A. Whenever an item of material or equipment is specified or described in the Contract Documents by using the name of a proprietary item or the name of a particular Supplier, the specification or description is intended to establish the type, function, appearance, and quality required. Unless the specification or description contains or is followed by words reading that no like, equivalent, or "or-equal" item or no substitution is permitted, other items of material or equipment or material or equipment of other Suppliers may be submitted to Engineer for review under the circumstances described below.

1. *"Or-Equal" Items:* If in Engineer's sole discretion an item of material or equipment proposed by Contractor is functionally equal to that named and sufficiently similar so that no change in related Work will be required, it may be considered by Engineer as an "or-equal" item, in which case review and approval of the proposed item may, in Engineer's sole discretion, be accomplished without compliance with some or all of the requirements for approval of proposed substitute items. For the purposes of this Paragraph 6.05.A.1, a proposed item of material or equipment will be considered functionally equal to an item so named if:

   a. in the exercise of reasonable judgment Engineer determines that:

      1) it is at least equal in materials of construction, quality, durability, appearance, strength, and design characteristics;

      2) it will reliably perform at least equally well the function and achieve the results imposed by the design concept of the completed Project as a functioning whole;

      3) it has a proven record of performance and availability of responsive service; and

   b. Contractor certifies that, if approved and incorporated into the Work:

      1) there will be no increase in cost to the Owner or increase in Contract Times, and

      2) it will conform substantially to the detailed requirements of the item named in the Contract Documents.

2. Substitute Items

   a. If in Engineer's sole discretion an item of material or equipment proposed by Contractor does not qualify as an "or-equal" item under Paragraph 6.05.A.1, it will be considered a proposed substitute item.

   b. Contractor shall submit sufficient information as provided below to allow Engineer to determine that the item of material or equipment proposed is essentially equivalent to that named and an acceptable substitute therefor. Requests for review of proposed substitute items of material or equipment will not be accepted by Engineer from anyone other than Contractor.

c. The procedure requirements for review by Engineer will be as set forth in Paragraph 6.05.A.2.d, as supplemented in the General Requirements and as Engineer may decide is appropriate under the circumstances.

d. Contractor shall make written application to Engineer for review of a proposed substitute item of material or equipment that Contractor seeks to furnish or use. The application:

1) shall certify that the proposed substitute item will:

will perform adequately the functions and achieve the results called for by the general design,

be similar in substance to that specified, and

be suited to the same use as that specified;

2) will state:

the extent, if any, to which the use of the proposed substitute item will prejudice Contractor's achievement of Substantial Completion on time;

whether or not use of the proposed substitute item in the Work will require a change in any of the Contract Documents (or in the provisions of any other direct contract with Owner for other work on the Project) to adapt the design to the proposed substitute item; and

whether or not incorporation or use of the proposed substitute item in connection with the Work is subject to payment of any license fee or royalty;

3) will identify:

all variations of the proposed substitute item from that specified , and

available engineering, sales, maintenance, repair, and replacement services;

4) and shall contain an itemized estimate of all costs or credits that will result directly or indirectly from use of such substitute item, including costs of redesign and claims of other contractors affected by any resulting change.

B. *Substitute Construction Methods or Procedures:* If a specific means, method, technique, sequence, or procedure of construction is expressly required by the Contract Documents, Contractor may furnish or utilize a substitute means, method, technique, sequence, or procedure of construction approved by Engineer. Contractor shall submit sufficient information to allow Engineer, in Engineer's sole discretion, to determine that the substitute proposed is equivalent to that expressly called for by the Contract Documents. The requirements for review by Engineer will be similar to those provided in Paragraph 6.05.A.2.

C. *Engineer's Evaluation:* Engineer will be allowed a reasonable time within which to evaluate each proposal or submittal made pursuant to Paragraphs 6.05.A and 6.05.B. Engineer may

require Contractor to furnish additional data about the proposed substitute item. Engineer will be the sole judge of acceptability. No "or equal" or substitute will be ordered, installed or utilized until Engineer's review is complete, which will be evidenced by either a Change Order for a substitute or an approved Shop Drawing for an "or equal." Engineer will advise Contractor in writing of any negative determination.

D. *Special Guarantee:* Owner may require Contractor to furnish at Contractor's expense a special performance guarantee or other surety with respect to any substitute.

E. *Engineer's Cost Reimbursement*: Engineer will record Engineer's costs in evaluating a substitute proposed or submitted by Contractor pursuant to Paragraphs 6.05.A.2 and 6.05.B. Whether or not Engineer approves a substitute item so proposed or submitted by Contractor, Contractor shall reimburse Owner for the charges of Engineer for evaluating each such proposed substitute. Contractor shall also reimburse Owner for the charges of Engineer for making changes in the Contract Documents (or in the provisions of any other direct contract with Owner) resulting from the acceptance of each proposed substitute.

F. *Contractor's Expense*: Contractor shall provide all data in support of any proposed substitute or "or-equal" at Contractor's expense.

6.6 *Concerning Subcontractors, Suppliers, and Others*

A. Contractor shall not employ any Subcontractor, Supplier, or other individual or entity (including those acceptable to Owner as indicated in Paragraph 6.06.B), whether initially or as a replacement, against whom Owner may have reasonable objection. Contractor shall not be required to employ any Subcontractor, Supplier, or other individual or entity to furnish or perform any of the Work against whom Contractor has reasonable objection.

B. If the Supplementary Conditions require the identity of certain Subcontractors, Suppliers, or other individuals or entities to be submitted to Owner in advance for acceptance by Owner by a specified date prior to the Effective Date of the Agreement, and if Contractor has submitted a list thereof in accordance with the Supplementary Conditions, Owner's acceptance (either in writing or by failing to make written objection thereto by the date indicated for acceptance or objection in the Bidding Documents or the Contract Documents) of any such Subcontractor, Supplier, or other individual or entity so identified may be revoked on the basis of reasonable objection after due investigation. Contractor shall submit an acceptable replacement for the rejected Subcontractor, Supplier, or other individual or entity, and the Contract Price will be adjusted by the difference in the cost occasioned by such replacement, and an appropriate Change Order will be issued. No acceptance by Owner of any such Subcontractor, Supplier, or other individual or entity, whether initially or as a replacement, shall constitute a waiver of any right of Owner or Engineer to reject defective Work.

C. Contractor shall be fully responsible to Owner and Engineer for all acts and omissions of the Subcontractors, Suppliers, and other individuals or entities performing or furnishing any of the Work just as Contractor is responsible for Contractor's own acts and omissions. Nothing in the Contract Documents:

1. shall create for the benefit of any such Subcontractor, Supplier, or other individual or entity any contractual relationship between Owner or Engineer and any such Subcontractor, Supplier or other individual or entity, nor

2. shall anything in the Contract Documents create any obligation on the part of Owner or Engineer to pay or to see to the payment of any moneys due any such Subcontractor, Supplier, or other individual or entity except as may otherwise be required by Laws and Regulations.

D. Contractor shall be solely responsible for scheduling and coordinating the Work of Subcontractors, Suppliers, and other individuals or entities performing or furnishing any of the Work under a direct or indirect contract with Contractor.

E. Contractor shall require all Subcontractors, Suppliers, and such other individuals or entities performing or furnishing any of the Work to communicate with Engineer through Contractor.

F. The divisions and sections of the Specifications and the identifications of any Drawings shall not control Contractor in dividing the Work among Subcontractors or Suppliers or delineating the Work to be performed by any specific trade.

G. All Work performed for Contractor by a Subcontractor or Supplier will be pursuant to an appropriate agreement between Contractor and the Subcontractor or Supplier which specifically binds the Subcontractor or Supplier to the applicable terms and conditions of the Contract Documents for the benefit of Owner and Engineer. Whenever any such agreement is with a Subcontractor or Supplier who is listed as an additional insured on the property insurance provided in Paragraph 5.06, the agreement between the Contractor and the Subcontractor or Supplier will contain provisions whereby the Subcontractor or Supplier waives all rights against Owner, Contractor, and Engineer, and all other individuals or entities identified in the Supplementary Conditions to be listed as insureds or additional insureds (and the officers, directors, partners, employees, agents, consultants and subcontractors of each and any of them) for all losses and damages caused by, arising out of, relating to, or resulting from any of the perils or causes of loss covered by such policies and any other property insurance applicable to the Work. If the insurers on any such policies require separate waiver forms to be signed by any Subcontractor or Supplier, Contractor will obtain the same.

6.7 *Patent Fees and Royalties*

A. Contractor shall pay all license fees and royalties and assume all costs incident to the use in the performance of the Work or the incorporation in the Work of any invention, design, process, product, or device which is the subject of patent rights or copyrights held by others. If a particular invention, design, process, product, or device is specified in the Contract Documents for use in the performance of the Work and if to the actual knowledge of Owner or Engineer its use is subject to patent rights or copyrights calling for the payment of any license fee or royalty to others, the existence of such rights shall be disclosed by Owner in the Contract Documents.

B. To the fullest extent permitted by Laws and Regulations, Contractor shall indemnify and hold harmless Owner and Engineer, and the officers, directors, partners, employees, agents, consultants and subcontractors of each and any of them from and against all claims, costs, losses, and damages (including but not limited to all fees and charges of engineers, architects, attorneys, and other professionals and all court or arbitration or other dispute resolution costs) arising out of or relating to any infringement of patent rights or copyrights incident to the use in the performance of the Work or resulting from the incorporation in the Work of any invention, design, process, product, or device not specified in the Contract Documents.

6.8 *Permits*

A. Unless otherwise provided in the Supplementary Conditions, Contractor shall obtain and pay for all construction permits and licenses. Owner shall assist Contractor, when necessary, in obtaining such permits and licenses. Contractor shall pay all governmental charges and inspection fees necessary for the prosecution of the Work which are applicable at the time of opening of Bids, or, if there are no Bids, on the Effective Date of the Agreement. Owner shall pay all charges of utility owners for connections for providing permanent service to the Work.

6.9 *Laws and Regulations*

A. Contractor shall give all notices required by and shall comply with all Laws and Regulations applicable to the performance of the Work. Except where otherwise expressly required by applicable Laws and Regulations, neither Owner nor Engineer shall be responsible for monitoring Contractor's compliance with any Laws or Regulations.

B. If Contractor performs any Work knowing or having reason to know that it is contrary to Laws or Regulations, Contractor shall bear all claims, costs, losses, and damages (including but not limited to all fees and charges of engineers, architects, attorneys, and other professionals and all court or arbitration or other dispute resolution costs) arising out of or relating to such Work. However, it shall not be Contractor's primary responsibility to make certain that the Specifications and Drawings are in accordance with Laws and Regulations, but this shall not relieve Contractor of Contractor's obligations under Paragraph 3.03.

C. Changes in Laws or Regulations not known at the time of opening of Bids (or, on the Effective Date of the Agreement if there were no Bids) having an effect on the cost or time of performance of the Work shall be the subject of an adjustment in Contract Price or Contract Times. If Owner and Contractor are unable to agree on entitlement to or on the amount or extent, if any, of any such adjustment, a Claim may be made therefor as provided in Paragraph 10.05.

6.10 *Taxes*

A. Contractor shall pay all sales, consumer, use, and other similar taxes required to be paid by Contractor in accordance with the Laws and Regulations of the place of the Project which are applicable during the performance of the Work.

6.11 *Use of Site and Other Areas*

A. *Limitation on Use of Site and Other Areas*

1. Contractor shall confine construction equipment, the storage of materials and equipment, and the operations of workers to the Site and other areas permitted by Laws and Regulations, and shall not unreasonably encumber the Site and other areas with construction equipment or other materials or equipment. Contractor shall assume full responsibility for any damage to any such land or area, or to the owner or occupant thereof, or of any adjacent land or areas resulting from the performance of the Work.

2. Should any claim be made by any such owner or occupant because of the performance of the Work, Contractor shall promptly settle with such other party by negotiation or otherwise resolve the claim by arbitration or other dispute resolution proceeding or at law.

3. To the fullest extent permitted by Laws and Regulations, Contractor shall indemnify and hold harmless Owner and Engineer, and the officers, directors, partners, employees, agents, consultants and subcontractors of each and any of them from and against all claims, costs, losses, and damages (including but not limited to all fees and charges of engineers, architects, attorneys, and other professionals and all court or arbitration or other dispute resolution costs) arising out of or relating to any claim or action, legal or equitable, brought by any such owner or occupant against Owner, Engineer, or any other party indemnified hereunder to the extent caused by or based upon Contractor's performance of the Work.

B. *Removal of Debris During Performance of the Work:* During the progress of the Work Contractor shall keep the Site and other areas free from accumulations of waste materials, rubbish, and other debris. Removal and disposal of such waste materials, rubbish, and other debris shall conform to applicable Laws and Regulations.

C. *Cleaning:* Prior to Substantial Completion of the Work, Contractor shall clean the Site and the Work and make it ready for utilization by Owner. At the completion of the Work Contractor shall remove from the Site all tools, appliances, construction equipment and machinery, and surplus materials and shall restore to original condition all property not designated for alteration by the Contract Documents.

D. *Loading Structures:* Contractor shall not load nor permit any part of any structure to be loaded in any manner that will endanger the structure, nor shall Contractor subject any part of the Work or adjacent property to stresses or pressures that will endanger it.

6.12 *Record Documents*

A. Contractor shall maintain in a safe place at the Site one record copy of all Drawings, Specifications, Addenda, Change Orders, Work Change Directives, Field Orders, and written interpretations and clarifications in good order and annotated to show changes made during construction. These record documents together with all approved Samples and a counterpart of all approved Shop Drawings will be available to Engineer for reference. Upon completion of the Work, these record documents, Samples, and Shop Drawings will be delivered to Engineer for Owner.

6.13 *Safety and Protection*

A. Contractor shall be solely responsible for initiating, maintaining and supervising all safety precautions and programs in connection with the Work. Contractor shall take all necessary

precautions for the safety of, and shall provide the necessary protection to prevent damage, injury or loss to:

1. all persons on the Site or who may be affected by the Work;

2. all the Work and materials and equipment to be incorporated therein, whether in storage on or off the Site; and

3. other property at the Site or adjacent thereto, including trees, shrubs, lawns, walks, pavements, roadways, structures, utilities, and Underground Facilities not designated for removal, relocation, or replacement in the course of construction.

B. Contractor shall comply with all applicable Laws and Regulations relating to the safety of persons or property, or to the protection of persons or property from damage, injury, or loss; and shall erect and maintain all necessary safeguards for such safety and protection. Contractor shall notify owners of adjacent property and of Underground Facilities and other utility owners when prosecution of the Work may affect them, and shall cooperate with them in the protection, removal, relocation, and replacement of their property.

C. All damage, injury, or loss to any property referred to in Paragraph 6.13.A.2 or 6.13.A.3 caused, directly or indirectly, in whole or in part, by Contractor, any Subcontractor, Supplier, or any other individual or entity directly or indirectly employed by any of them to perform any of the Work, or anyone for whose acts any of them may be liable, shall be remedied by Contractor (except damage or loss attributable to the fault of Drawings or Specifications or to the acts or omissions of Owner or Engineer or , or anyone employed by any of them, or anyone for whose acts any of them may be liable, and not attributable, directly or indirectly, in whole or in part, to the fault or negligence of Contractor or any Subcontractor, Supplier, or other individual or entity directly or indirectly employed by any of them).

D. Contractor's duties and responsibilities for safety and for protection of the Work shall continue until such time as all the Work is completed and Engineer has issued a notice to Owner and Contractor in accordance with Paragraph 14.07.B that the Work is acceptable (except as otherwise expressly provided in connection with Substantial Completion).

6.14 *Safety Representative*

A. Contractor shall designate a qualified and experienced safety representative at the Site whose duties and responsibilities shall be the prevention of accidents and the maintaining and supervising of safety precautions and programs.

6.15 *Hazard Communication Programs*

A. Contractor shall be responsible for coordinating any exchange of material safety data sheets or other hazard communication information required to be made available to or exchanged between or among employers at the Site in accordance with Laws or Regulations.

6.16 *Emergencies*

A. In emergencies affecting the safety or protection of persons or the Work or property at the Site or adjacent thereto, Contractor is obligated to act to prevent threatened damage, injury, or loss.

Contractor shall give Engineer prompt written notice if Contractor believes that any significant changes in the Work or variations from the Contract Documents have been caused thereby or are required as a result thereof. If Engineer determines that a change in the Contract Documents is required because of the action taken by Contractor in response to such an emergency, a Work Change Directive or Change Order will be issued.

6.17 *Shop Drawings and Samples*

A. Contractor shall submit Shop Drawings and Samples to Engineer for review and approval in accordance with the acceptable Schedule of Submittals (as required by Paragraph 2.07). Each submittal will be identified as Engineer may require.

1. *Shop Drawings*

a. Submit number of copies specified in the General Requirements.

b. Data shown on the Shop Drawings will be complete with respect to quantities, dimensions, specified performance and design criteria, materials, and similar data to show Engineer the services, materials, and equipment Contractor proposes to provide and to enable Engineer to review the information for the limited purposes required by Paragraph 6.17.D.

2. *Samples*

a. Submit number of Samples specified in the Specifications.

b. Clearly identify each Sample as to material, Supplier, pertinent data such as catalog numbers, the use for which intended and other data as Engineer may require to enable Engineer to review the submittal for the limited purposes required by Paragraph 6.17.D.

B. Where a Shop Drawing or Sample is required by the Contract Documents or the Schedule of Submittals, any related Work performed prior to Engineer's review and approval of the pertinent submittal will be at the sole expense and responsibility of Contractor.

C. *Submittal Procedures*

1. Before submitting each Shop Drawing or Sample, Contractor shall have determined and verified:

a. all field measurements, quantities, dimensions, specified performance and design criteria, installation requirements, materials, catalog numbers, and similar information with respect thereto;

b. the suitability of all materials with respect to intended use, fabrication, shipping, handling, storage, assembly, and installation pertaining to the performance of the Work;

c. all information relative to Contractor's responsibilities for means, methods, techniques, sequences, and procedures of construction, and safety precautions and programs incident thereto; and

d. shall also have reviewed and coordinated each Shop Drawing or Sample with other Shop Drawings and Samples and with the requirements of the Work and the Contract Documents.

2. Each submittal shall bear a stamp or specific written certification that Contractor has satisfied Contractor's obligations under the Contract Documents with respect to Contractor's review and approval of that submittal.

3. With each submittal, Contractor shall give Engineer specific written notice of any variations, that the Shop Drawing or Sample may have from the requirements of the Contract Documents. This notice shall be both a written communication separate from the Shop Drawings or Sample submittal; and, in addition, by a specific notation made on each Shop Drawing or Sample submitted to Engineer for review and approval of each such variation.

D. *Engineer's Review*

1. Engineer will provide timely review of Shop Drawings and Samples in accordance with the Schedule of Submittals acceptable to Engineer. Engineer's review and approval will be only to determine if the items covered by the submittals will, after installation or incorporation in the Work, conform to the information given in the Contract Documents and be compatible with the design concept of the completed Project as a functioning whole as indicated by the Contract Documents.

2. Engineer's review and approval will not extend to means, methods, techniques, sequences, or procedures of construction (except where a particular means, method, technique, sequence, or procedure of construction is specifically and expressly called for by the Contract Documents) or to safety precautions or programs incident thereto. The review and approval of a separate item as such will not indicate approval of the assembly in which the item functions.

3. Engineer's review and approval shall not relieve Contractor from responsibility for any variation from the requirements of the Contract Documents unless Contractor has complied with the requirements of Paragraph 6.17.C.3 and Engineer has given written approval of each such variation by specific written notation thereof incorporated in or accompanying the Shop Drawing or Sample. Engineer's review and approval shall not relieve Contractor from responsibility for complying with the requirements of Paragraph 6.17.C.1.

E. *Resubmittal Procedures*

1. Contractor shall make corrections required by Engineer and shall return the required number of corrected copies of Shop Drawings and submit, as required, new Samples for review and approval. Contractor shall direct specific attention in writing to revisions other than the corrections called for by Engineer on previous submittals.

6.18 *Continuing the Work*

A. Contractor shall carry on the Work and adhere to the Progress Schedule during all disputes or disagreements with Owner. No Work shall be delayed or postponed pending resolution of any

disputes or disagreements, except as permitted by Paragraph 15.04 or as Owner and Contractor may otherwise agree in writing.

6.19 *Contractor's General Warranty and Guarantee*

A. Contractor warrants and guarantees to Owner that all Work will be in accordance with the Contract Documents and will not be defective. Engineer and its Related Entities shall be entitled to rely on representation of Contractor's warranty and guarantee.

B. Contractor's warranty and guarantee hereunder excludes defects or damage caused by:

1. abuse, modification, or improper maintenance or operation by persons other than Contractor, Subcontractors, Suppliers, or any other individual or entity for whom Contractor is responsible; or

2. normal wear and tear under normal usage.

C. Contractor's obligation to perform and complete the Work in accordance with the Contract Documents shall be absolute. None of the following will constitute an acceptance of Work that is not in accordance with the Contract Documents or a release of Contractor's obligation to perform the Work in accordance with the Contract Documents:

1. observations by Engineer;

2. recommendation by Engineer or payment by Owner of any progress or final payment;

3. the issuance of a certificate of Substantial Completion by Engineer or any payment related thereto by Owner;

4. use or occupancy of the Work or any part thereof by Owner;

5. any review and approval of a Shop Drawing or Sample submittal or the issuance of a notice of acceptability by Engineer;

6. any inspection, test, or approval by others; or

7. any correction of defective Work by Owner.

6.20 *Indemnification*

A. To the fullest extent permitted by Laws and Regulations, Contractor shall indemnify and hold harmless Owner and Engineer, and the officers, directors, partners, employees, agents, consultants and subcontractors of each and any of them from and against all claims, costs, losses, and damages (including but not limited to all fees and charges of engineers, architects, attorneys, and other professionals and all court or arbitration or other dispute resolution costs) arising out of or relating to the performance of the Work, provided that any such claim, cost, loss, or damage is attributable to bodily injury, sickness, disease, or death, or to injury to or destruction of tangible property (other than the Work itself), including the loss of use resulting therefrom but only to the extent caused by any negligent act or omission of Contractor, any

Subcontractor, any Supplier, or any individual or entity directly or indirectly employed by any of them to perform any of the Work or anyone for whose acts any of them may be liable.

B. In any and all claims against Owner or Engineer or any of their respective consultants, agents, officers, directors, partners, or employees by any employee (or the survivor or personal representative of such employee) of Contractor, any Subcontractor, any Supplier, or any individual or entity directly or indirectly employed by any of them to perform any of the Work, or anyone for whose acts any of them may be liable, the indemnification obligation under Paragraph 6.20.A shall not be limited in any way by any limitation on the amount or type of damages, compensation, or benefits payable by or for Contractor or any such Subcontractor, Supplier, or other individual or entity under workers' compensation acts, disability benefit acts, or other employee benefit acts.

C. The indemnification obligations of Contractor under Paragraph 6.20.A shall not extend to the liability of Engineer and Engineer's officers, directors, partners, employees, agents, consultants and subcontractors arising out of:

1. the preparation or approval of, or the failure to prepare or approve, maps, Drawings, opinions, reports, surveys, Change Orders, designs, or Specifications; or

2. giving directions or instructions, or failing to give them, if that is the primary cause of the injury or damage.

6.21 *Delegation of Professional Design Services*

A. Contractor will not be required to provide professional design services unless such services are specifically required by the Contract Documents for a portion of the Work or unless such services are required to carry out Contractor's responsibilities for construction means, methods, techniques, sequences and procedures. Contractor shall not be required to provide professional services in violation of applicable law.

B. If professional design services or certifications by a design professional related to systems, materials or equipment are specifically required of Contractor by the Contract Documents, Owner and Engineer will specify all performance and design criteria that such services must satisfy. Contractor shall cause such services or certifications to be provided by a properly licensed professional, whose signature and seal shall appear on all drawings, calculations, specifications, certifications, Shop Drawings and other submittals prepared by such professional. Shop Drawings and other submittals related to the Work designed or certified by such professional, if prepared by others, shall bear such professional's written approval when submitted to Engineer.

C. Owner and Engineer shall be entitled to rely upon the adequacy, accuracy and completeness of the services, certifications or approvals performed by such design professionals, provided Owner and Engineer have specified to Contractor all performance and design criteria that such services must satisfy.

D. Pursuant to this Paragraph 6.21, Engineer's review and approval of design calculations and design drawings will be only for the limited purpose of checking for conformance with performance and design criteria given and the design concept expressed in the Contract

Documents. Engineer's review and approval of Shop Drawings and other submittals (except design calculations and design drawings) will be only for the purpose stated in Paragraph 6.17.D.1.

E. Contractor shall not be responsible for the adequacy of the performance or design criteria required by the Contract Documents.

ARTICLE 7 – OTHER WORK AT THE SITE

7.1 *Related Work at Site*

A. Owner may perform other work related to the Project at the Site with Owner's employees, or via other direct contracts therefor, or have other work performed by utility owners. If such other work is not noted in the Contract Documents, then:

1. written notice thereof will be given to Contractor prior to starting any such other work; and

2. if Owner and Contractor are unable to agree on entitlement to or on the amount or extent, if any, of any adjustment in the Contract Price or Contract Times that should be allowed as a result of such other work, a Claim may be made therefor as provided in Paragraph 10.05.

B. Contractor shall afford each other contractor who is a party to such a direct contract, each utility owner and Owner, if Owner is performing other work with Owner's employees, proper and safe access to the Site, a reasonable opportunity for the introduction and storage of materials and equipment and the execution of such other work, and shall properly coordinate the Work with theirs. Contractor shall do all cutting, fitting, and patching of the Work that may be required to properly connect or otherwise make its several parts come together and properly integrate with such other work. Contractor shall not endanger any work of others by cutting, excavating, or otherwise altering their work and will only cut or alter their work with the written consent of Engineer and the others whose work will be affected. The duties and responsibilities of Contractor under this Paragraph are for the benefit of such utility owners and other contractors to the extent that there are comparable provisions for the benefit of Contractor in said direct contracts between Owner and such utility owners and other contractors.

C. If the proper execution or results of any part of Contractor's Work depends upon work performed by others under this Article 7, Contractor shall inspect such other work and promptly report to Engineer in writing any delays, defects, or deficiencies in such other work that render it unavailable or unsuitable for the proper execution and results of Contractor's Work. Contractor's failure to so report will constitute an acceptance of such other work as fit and proper for integration with Contractor's Work except for latent defects and deficiencies in such other work.

7.2 *Coordination*

A. If Owner intends to contract with others for the performance of other work on the Project at the Site, the following will be set forth in Supplementary Conditions:

1. the individual or entity who will have authority and responsibility for coordination of the activities among the various contractors will be identified;

2. the specific matters to be covered by such authority and responsibility will be itemized; and

3. the extent of such authority and responsibilities will be provided.

B. Unless otherwise provided in the Supplementary Conditions, Owner shall have sole authority and responsibility for such coordination.

7.3 *Legal Relationships*

A. Paragraphs 7.01.A and 7.02 are not applicable for utilities not under the control of Owner.

B. Each other direct contract of Owner under Paragraph 7.01.A shall provide that the other contractor is liable to Owner and Contractor for the reasonable direct delay and disruption costs incurred by Contractor as a result of the other contractor's actions or inactions.

C. Contractor shall be liable to Owner and any other contractor for the reasonable direct delay and disruption costs incurred by such other contractor as a result of Contractor's action or inactions.

ARTICLE 8 – OWNER'S RESPONSIBILITIES

8.1 *Communications to Contractor*

A. Except as otherwise provided in these General Conditions, Owner shall issue all communications to Contractor through Engineer.

8.2 *Replacement of Engineer*

A. In case of termination of the employment of Engineer, Owner shall appoint an engineer to whom Contractor makes no reasonable objection, whose status under the Contract Documents shall be that of the former Engineer.

8.3 *Furnish Data*

A. Owner shall promptly furnish the data required of Owner under the Contract Documents.

8.4 *Pay When Due*

A. Owner shall make payments to Contractor when they are due as provided in Paragraphs 14.02.C and 14.07.C.

8.5 *Lands and Easements; Reports and Tests*

A. Owner's duties in respect of providing lands and easements and providing engineering surveys to establish reference points are set forth in Paragraphs 4.01 and 4.05. Paragraph 4.02 refers to Owner's identifying and making available to Contractor copies of reports of explorations and tests of subsurface conditions and drawings of physical conditions in or relating to existing surface or subsurface structures at or contiguous to the Site that have been utilized by Engineer in preparing the Contract Documents.

8.6 *Insurance*

A. Owner's responsibilities, if any, in respect to purchasing and maintaining liability and property insurance are set forth in Article 5.

8.7 *Change Orders*

A. Owner is obligated to execute Change Orders as indicated in Paragraph 10.03.

8.8 *Inspections, Tests, and Approvals*

A. Owner's responsibility in respect to certain inspections, tests, and approvals is set forth in Paragraph 13.03.B.

8.9 *Limitations on Owner's Responsibilities*

A. The Owner shall not supervise, direct, or have control or authority over, nor be responsible for, Contractor's means, methods, techniques, sequences, or procedures of construction, or the safety precautions and programs incident thereto, or for any failure of Contractor to comply with Laws and Regulations applicable to the performance of the Work. Owner will not be responsible for Contractor's failure to perform the Work in accordance with the Contract Documents.

8.10 *Undisclosed Hazardous Environmental Condition*

A. Owner's responsibility in respect to an undisclosed Hazardous Environmental Condition is set forth in Paragraph 4.06.

8.11 *Evidence of Financial Arrangements*

A. If and to the extent Owner has agreed to furnish Contractor reasonable evidence that financial arrangements have been made to satisfy Owner's obligations under the Contract Documents, Owner's responsibility in respect thereof will be as set forth in the Supplementary Conditions.

ARTICLE 9 – ENGINEER'S STATUS DURING CONSTRUCTION

9.1 *Owner's Representative*

A. Engineer will be Owner's representative during the construction period. The duties and responsibilities and the limitations of authority of Engineer as Owner's representative during construction are set forth in the Contract Documents and will not be changed without written consent of Owner and Engineer.

9.2 *Visits to Site*

A. Engineer will make visits to the Site at intervals appropriate to the various stages of construction as Engineer deems necessary in order to observe as an experienced and qualified design professional the progress that has been made and the quality of the various aspects of Contractor's executed Work. Based on information obtained during such visits and observations, Engineer, for the benefit of Owner, will determine, in general, if the Work is

proceeding in accordance with the Contract Documents. Engineer will not be required to make exhaustive or continuous inspections on the Site to check the quality or quantity of the Work. Engineer's efforts will be directed toward providing for Owner a greater degree of confidence that the completed Work will conform generally to the Contract Documents. On the basis of such visits and observations, Engineer will keep Owner informed of the progress of the Work and will endeavor to guard Owner against defective Work.

B. Engineer's visits and observations are subject to all the limitations on Engineer's authority and responsibility set forth in Paragraph 9.09. Particularly, but without limitation, during or as a result of Engineer's visits or observations of Contractor's Work Engineer will not supervise, direct, control, or have authority over or be responsible for Contractor's means, methods, techniques, sequences, or procedures of construction, or the safety precautions and programs incident thereto, or for any failure of Contractor to comply with Laws and Regulations applicable to the performance of the Work.

9.3 *Project Representative*

A. If Owner and Engineer agree, Engineer will furnish a Resident Project Representative to assist Engineer in providing more extensive observation of the Work. The authority and responsibilities of any such Resident Project Representative and assistants will be as provided in the Supplementary Conditions, and limitations on the responsibilities thereof will be as provided in Paragraph 9.09. If Owner designates another representative or agent to represent Owner at the Site who is not Engineer's consultant, agent or employee, the responsibilities and authority and limitations thereon of such other individual or entity will be as provided in the Supplementary Conditions.

9.4 *Authorized Variations in Work*

A. Engineer may authorize minor variations in the Work from the requirements of the Contract Documents which do not involve an adjustment in the Contract Price or the Contract Times and are compatible with the design concept of the completed Project as a functioning whole as indicated by the Contract Documents. These may be accomplished by a Field Order and will be binding on Owner and also on Contractor, who shall perform the Work involved promptly. If Owner or Contractor believes that a Field Order justifies an adjustment in the Contract Price or Contract Times, or both, and the parties are unable to agree on entitlement to or on the amount or extent, if any, of any such adjustment, a Claim may be made therefor as provided in Paragraph 10.05.

9.5 *Rejecting Defective Work*

A. Engineer will have authority to reject Work which Engineer believes to be defective, or that Engineer believes will not produce a completed Project that conforms to the Contract Documents or that will prejudice the integrity of the design concept of the completed Project as a functioning whole as indicated by the Contract Documents. Engineer will also have authority to require special inspection or testing of the Work as provided in Paragraph 13.04, whether or not the Work is fabricated, installed, or completed.

9.6 *Shop Drawings, Change Orders and Payments*

A. In connection with Engineer's authority, and limitations thereof, as to Shop Drawings and Samples, see Paragraph 6.17.

B. In connection with Engineer's authority, and limitations thereof, as to design calculations and design drawings submitted in response to a delegation of professional design services, if any, see Paragraph 6.21.

C. In connection with Engineer's authority as to Change Orders, see Articles 10, 11, and 12.

D. In connection with Engineer's authority as to Applications for Payment, see Article 14.

9.7 *Determinations for Unit Price Work*

A. Engineer will determine the actual quantities and classifications of Unit Price Work performed by Contractor. Engineer will review with Contractor the Engineer's preliminary determinations on such matters before rendering a written decision thereon (by recommendation of an Application for Payment or otherwise). Engineer's written decision thereon will be final and binding (except as modified by Engineer to reflect changed factual conditions or more accurate data) upon Owner and Contractor, subject to the provisions of Paragraph 10.05.

9.8 *Decisions on Requirements of Contract Documents and Acceptability of Work*

A. Engineer will be the initial interpreter of the requirements of the Contract Documents and judge of the acceptability of the Work thereunder. All matters in question and other matters between Owner and Contractor arising prior to the date final payment is due relating to the acceptability of the Work, and the interpretation of the requirements of the Contract Documents pertaining to the performance of the Work, will be referred initially to Engineer in writing within 30 days of the event giving rise to the question.

B. Engineer will, with reasonable promptness, render a written decision on the issue referred. If Owner or Contractor believe that any such decision entitles them to an adjustment in the Contract Price or Contract Times or both, a Claim may be made under Paragraph 10.05. The date of Engineer's decision shall be the date of the event giving rise to the issues referenced for the purposes of Paragraph 10.05.B.

C. Engineer's written decision on the issue referred will be final and binding on Owner and Contractor, subject to the provisions of Paragraph 10.05.

D. When functioning as interpreter and judge under this Paragraph 9.08, Engineer will not show partiality to Owner or Contractor and will not be liable in connection with any interpretation or decision rendered in good faith in such capacity.

9.9 *Limitations on Engineer's Authority and Responsibilities*

A. Neither Engineer's authority or responsibility under this Article 9 or under any other provision of the Contract Documents nor any decision made by Engineer in good faith either to exercise or not exercise such authority or responsibility or the undertaking, exercise, or performance of any authority or responsibility by Engineer shall create, impose, or give rise to any duty in

contract, tort, or otherwise owed by Engineer to Contractor, any Subcontractor, any Supplier, any other individual or entity, or to any surety for or employee or agent of any of them.

B. Engineer will not supervise, direct, control, or have authority over or be responsible for Contractor's means, methods, techniques, sequences, or procedures of construction, or the safety precautions and programs incident thereto, or for any failure of Contractor to comply with Laws and Regulations applicable to the performance of the Work. Engineer will not be responsible for Contractor's failure to perform the Work in accordance with the Contract Documents.

C. Engineer will not be responsible for the acts or omissions of Contractor or of any Subcontractor, any Supplier, or of any other individual or entity performing any of the Work.

D. Engineer's review of the final Application for Payment and accompanying documentation and all maintenance and operating instructions, schedules, guarantees, bonds, certificates of inspection, tests and approvals, and other documentation required to be delivered by Paragraph 14.07.A will only be to determine generally that their content complies with the requirements of, and in the case of certificates of inspections, tests, and approvals that the results certified indicate compliance with the Contract Documents.

E. The limitations upon authority and responsibility set forth in this Paragraph 9.09 shall also apply to the Resident Project Representative, if any, and assistants, if any.

ARTICLE 10 – CHANGES IN THE WORK; CLAIMS

10.1 *Authorized Changes in the Work*

A. Without invalidating the Contract and without notice to any surety, Owner may, subject to written approval by Agency at any time or from time to time, order additions, deletions, or revisions in the Work by a Change Order, or a Work Change Directive. Upon receipt of any such document, Contractor shall promptly proceed with the Work involved which will be performed under the applicable conditions of the Contract Documents (except as otherwise specifically provided).

B. If Owner and Contractor are unable to agree on entitlement to, or on the amount or extent, if any, of an adjustment in the Contract Price or Contract Times, or both, that should be allowed as a result of a Work Change Directive, a Claim may be made therefor as provided in Paragraph 10.05.

10.2 *Unauthorized Changes in the Work*

A. Contractor shall not be entitled to an increase in the Contract Price or an extension of the Contract Times with respect to any work performed that is not required by the Contract Documents as amended, modified, or supplemented as provided in Paragraph 3.04, except in the case of an emergency as provided in Paragraph 6.16 or in the case of uncovering Work as provided in Paragraph 13.04.B.

10.3 *Execution of Change Orders*

A. Owner and Contractor shall execute appropriate Change Orders recommended by Engineer covering:

1. changes in the Work which are: (i) ordered by Owner pursuant to Paragraph 10.01.A, (ii) required because of acceptance of defective Work under Paragraph 13.08.A or Owner's correction of defective Work under Paragraph 13.09, or (iii) agreed to by the parties;

2. changes in the Contract Price or Contract Times which are agreed to by the parties, including any undisputed sum or amount of time for Work actually performed in accordance with a Work Change Directive; and

3. changes in the Contract Price or Contract Times which embody the substance of any written decision rendered by Engineer pursuant to Paragraph 10.05; provided that, in lieu of executing any such Change Order, an appeal may be taken from any such decision in accordance with the provisions of the Contract Documents and applicable Laws and Regulations, but during any such appeal, Contractor shall carry on the Work and adhere to the Progress Schedule as provided in Paragraph 6.18.A.

10.4 *Notification to Surety*

A. If notice of any change affecting the general scope of the Work or the provisions of the Contract Documents (including, but not limited to, Contract Price or Contract Times) is required by the provisions of any bond to be given to a surety, the giving of any such notice will be Contractor's responsibility. The amount of each applicable bond will be adjusted to reflect the effect of any such change.

10.5 *Claims*

A. *Engineer's Decision Required*: All Claims, except those waived pursuant to Paragraph 14.09, shall be referred to the Engineer for decision. A decision by Engineer shall be required as a condition precedent to any exercise by Owner or Contractor of any rights or remedies either may otherwise have under the Contract Documents or by Laws and Regulations in respect of such Claims.

B. *Notice:* Written notice stating the general nature of each Claim shall be delivered by the claimant to Engineer and the other party to the Contract promptly (but in no event later than 30 days) after the start of the event giving rise thereto. The responsibility to substantiate a Claim shall rest with the party making the Claim. Notice of the amount or extent of the Claim, with supporting data shall be delivered to the Engineer and the other party to the Contract within 60 days after the start of such event (unless Engineer allows additional time for claimant to submit additional or more accurate data in support of such Claim). A Claim for an adjustment in Contract Price shall be prepared in accordance with the provisions of Paragraph 12.01.B. A Claim for an adjustment in Contract Time shall be prepared in accordance with the provisions of Paragraph 12.02.B. Each Claim shall be accompanied by claimant's written statement that the adjustment claimed is the entire adjustment to which the claimant believes it is entitled as a result of said event. The opposing party shall submit any response to Engineer and the claimant

within 30 days after receipt of the claimant's last submittal (unless Engineer allows additional time).

C. *Engineer's Action*: Engineer will review each Claim and, within 30 days after receipt of the last submittal of the claimant or the last submittal of the opposing party, if any, take one of the following actions in writing:

1. deny the Claim in whole or in part,

2. approve the Claim, or

3. notify the parties that the Engineer is unable to resolve the Claim if, in the Engineer's sole discretion, it would be inappropriate for the Engineer to do so. For purposes of further resolution of the Claim, such notice shall be deemed a denial.

D. In the event that Engineer does not take action on a Claim within said 30 days, the Claim shall be deemed denied.

E. Engineer's written action under Paragraph 10.05.C or denial pursuant to Paragraphs 10.05.C.3 or 10.05.D will be final and binding upon Owner and Contractor, unless Owner or Contractor invoke the dispute resolution procedure set forth in Article 16 within 30 days of such action or denial.

F. No Claim for an adjustment in Contract Price or Contract Times will be valid if not submitted in accordance with this Paragraph 10.05.

ARTICLE 11 – COST OF THE WORK; ALLOWANCES; UNIT PRICE WORK

11.1 *Cost of the Work*

A. *Costs Included:* The term Cost of the Work means the sum of all costs, except those excluded in Paragraph 11.01.B, necessarily incurred and paid by Contractor in the proper performance of the Work. When the value of any Work covered by a Change Order or when a Claim for an adjustment in Contract Price is determined on the basis of Cost of the Work, the costs to be reimbursed to Contractor will be only those additional or incremental costs required because of the change in the Work or because of the event giving rise to the Claim. Except as otherwise may be agreed to in writing by Owner, such costs shall be in amounts no higher than those prevailing in the locality of the Project, shall include only the following items, and shall not include any of the costs itemized in Paragraph 11.01.B.

1. Payroll costs for employees in the direct employ of Contractor in the performance of the Work under schedules of job classifications agreed upon by Owner and Contractor. Such employees shall include, without limitation, superintendents, foremen, and other personnel employed full time at the Site. Payroll costs for employees not employed full time on the Work shall be apportioned on the basis of their time spent on the Work. Payroll costs shall include, but not be limited to, salaries and wages plus the cost of fringe benefits, which shall include social security contributions, unemployment, excise, and payroll taxes, workers' compensation, health and retirement benefits, bonuses, sick leave, vacation and holiday pay applicable thereto. The expenses of performing Work outside of regular

working hours, on Saturday, Sunday, or legal holidays, shall be included in the above to the extent authorized by Owner.

2. Cost of all materials and equipment furnished and incorporated in the Work, including costs of transportation and storage thereof, and Suppliers' field services required in connection therewith. All cash discounts shall accrue to Contractor unless Owner deposits funds with Contractor with which to make payments, in which case the cash discounts shall accrue to Owner. All trade discounts, rebates and refunds and returns from sale of surplus materials and equipment shall accrue to Owner, and Contractor shall make provisions so that they may be obtained.

3. Payments made by Contractor to Subcontractors for Work performed by Subcontractors. If required by Owner, Contractor shall obtain competitive bids from subcontractors acceptable to Owner and Contractor and shall deliver such bids to Owner, who will then determine, with the advice of Engineer, which bids, if any, will be acceptable. If any subcontract provides that the Subcontractor is to be paid on the basis of Cost of the Work plus a fee, the Subcontractor's Cost of the Work and fee shall be determined in the same manner as Contractor's Cost of the Work and fee as provided in this Paragraph 11.01.

4. Costs of special consultants (including but not limited to Engineers, architects, testing laboratories, surveyors, attorneys, and accountants) employed for services specifically related to the Work.

5. Supplemental costs including the following:

    a. The proportion of necessary transportation, travel, and subsistence expenses of Contractor's employees incurred in discharge of duties connected with the Work.

    b. Cost, including transportation and maintenance, of all materials, supplies, equipment, machinery, appliances, office, and temporary facilities at the Site, and hand tools not owned by the workers, which are consumed in the performance of the Work, and cost, less market value, of such items used but not consumed which remain the property of Contractor.

    c. Rentals of all construction equipment and machinery, and the parts thereof whether rented from Contractor or others in accordance with rental agreements approved by Owner with the advice of Engineer, and the costs of transportation, loading, unloading, assembly, dismantling, and removal thereof. All such costs shall be in accordance with the terms of said rental agreements. The rental of any such equipment, machinery, or parts shall cease when the use thereof is no longer necessary for the Work.

    d. Sales, consumer, use, and other similar taxes related to the Work, and for which Contractor is liable, imposed by Laws and Regulations.

    e. Deposits lost for causes other than negligence of Contractor, any Subcontractor, or anyone directly or indirectly employed by any of them or for whose acts any of them may be liable, and royalty payments and fees for permits and licenses.

f. Losses and damages (and related expenses) caused by damage to the Work, not compensated by insurance or otherwise, sustained by Contractor in connection with the performance of the Work (except losses and damages within the deductible amounts of property insurance established in accordance with Paragraph 5.06.D), provided such losses and damages have resulted from causes other than the negligence of Contractor, any Subcontractor, or anyone directly or indirectly employed by any of them or for whose acts any of them may be liable. Such losses shall include settlements made with the written consent and approval of Owner. No such losses, damages, and expenses shall be included in the Cost of the Work for the purpose of determining Contractor's fee.

g. The cost of utilities, fuel, and sanitary facilities at the Site.

h. Minor expenses such as telegrams, long distance telephone calls, telephone service at the Site, expressages, and similar petty cash items in connection with the Work.

i. The costs of premiums for all bonds and insurance Contractor is required by the Contract Documents to purchase and maintain.

B. *Costs Excluded:* The term Cost of the Work shall not include any of the following items:

1. Payroll costs and other compensation of Contractor's officers, executives, principals (of partnerships and sole proprietorships), general managers, safety managers, engineers, architects, estimators, attorneys, auditors, accountants, purchasing and contracting agents, expediters, timekeepers, clerks, and other personnel employed by Contractor, whether at the Site or in Contractor's principal or branch office for general administration of the Work and not specifically included in the agreed upon schedule of job classifications referred to in Paragraph 11.01.A.1 or specifically covered by Paragraph 11.01.A.4, all of which are to be considered administrative costs covered by the Contractor's fee.

2. Expenses of Contractor's principal and branch offices other than Contractor's office at the Site.

3. Any part of Contractor's capital expenses, including interest on Contractor's capital employed for the Work and charges against Contractor for delinquent payments.

4. Costs due to the negligence of Contractor, any Subcontractor, or anyone directly or indirectly employed by any of them or for whose acts any of them may be liable, including but not limited to, the correction of defective Work, disposal of materials or equipment wrongly supplied, and making good any damage to property.

5. Other overhead or general expense costs of any kind and the costs of any item not specifically and expressly included in Paragraphs 11.01.A and 11.01.B.

C. Contractor's Fee: When all the Work is performed on the basis of cost-plus, Contractor's fee shall be determined as set forth in the Agreement. When the value of any Work covered by a Change Order or when a Claim for an adjustment in Contract Price is determined on the basis of Cost of the Work, Contractor's fee shall be determined as set forth in Paragraph 12.01.C.

D. *Documentation:* Whenever the Cost of the Work for any purpose is to be determined pursuant to Paragraphs 11.01.A and 11.01.B, Contractor will establish and maintain records thereof in accordance with generally accepted accounting practices and submit in a form acceptable to Engineer an itemized cost breakdown together with supporting data.

11.2 *Allowances*

A. It is understood that Contractor has included in the Contract Price all allowances so named in the Contract Documents and shall cause the Work so covered to be performed for such sums and by such persons or entities as may be acceptable to Owner and Engineer.

B. Cash Allowances

1. Contractor agrees that:

a. the cash allowances include the cost to Contractor (less any applicable trade discounts) of materials and equipment required by the allowances to be delivered at the Site, and all applicable taxes; and

b. Contractor's costs for unloading and handling on the Site, labor, installation, overhead, profit, and other expenses contemplated for the cash allowances have been included in the Contract Price and not in the allowances, and no demand for additional payment on account of any of the foregoing will be valid.

C. *Contingency Allowance*

1. Contractor agrees that a contingency allowance, if any, is for the sole use of Owner to cover unanticipated costs.

D. Prior to final payment, an appropriate Change Order will be issued as recommended by Engineer to reflect actual amounts due Contractor on account of Work covered by allowances, and the Contract Price shall be correspondingly adjusted.

11.3 *Unit Price Work*

A. Where the Contract Documents provide that all or part of the Work is to be Unit Price Work, initially the Contract Price will be deemed to include for all Unit Price Work an amount equal to the sum of the unit price for each separately identified item of Unit Price Work times the estimated quantity of each item as indicated in the Agreement.

B. The estimated quantities of items of Unit Price Work are not guaranteed and are solely for the purpose of comparison of Bids and determining an initial Contract Price. Determinations of the actual quantities and classifications of Unit Price Work performed by Contractor will be made by Engineer subject to the provisions of Paragraph 9.07.

C. Each unit price will be deemed to include an amount considered by Contractor to be adequate to cover Contractor's overhead and profit for each separately identified item.

D. Owner or Contractor may make a Claim for an adjustment in the Contract Price in accordance with Paragraph 10.05 if:

1. the Bid price of a particular item of Unit Price Work amounts to more than 5 percent of the Contract Price and the variation in the quantity of that particular item of Unit Price Work performed by Contractor differs by more than 25 percent from the estimated quantity of such item indicated in the Agreement; and

2. there is no corresponding adjustment with respect to any other item of Work; and

3. Contractor believes that Contractor is entitled to an increase in Contract Price as a result of having incurred additional expense or Owner believes that Owner is entitled to a decrease in Contract Price and the parties are unable to agree as to the amount of any such increase or decrease.

ARTICLE 12 – CHANGE OF CONTRACT PRICE; CHANGE OF CONTRACT TIMES

12.1 *Change of Contract Price*

A. The Contract Price may only be changed by a Change Order. Any Claim for an adjustment in the Contract Price shall be based on written notice submitted by the party making the Claim to the Engineer and the other party to the Contract in accordance with the provisions of Paragraph 10.05.

B. The value of any Work covered by a Change Order or of any Claim for an adjustment in the Contract Price will be determined as follows:

1. where the Work involved is covered by unit prices contained in the Contract Documents, by application of such unit prices to the quantities of the items involved (subject to the provisions of Paragraph 11.03); or

2. where the Work involved is not covered by unit prices contained in the Contract Documents, by a mutually agreed lump sum (which may include an allowance for overhead and profit not necessarily in accordance with Paragraph 12.01.C.2); or

3. where the Work involved is not covered by unit prices contained in the Contract Documents and agreement to a lump sum is not reached under Paragraph 12.01.B.2, on the basis of the Cost of the Work (determined as provided in Paragraph 11.01) plus a Contractor's fee for overhead and profit (determined as provided in Paragraph 12.01.C).

C. Contractor's Fee: The Contractor's fee for overhead and profit shall be determined as follows:

1. a mutually acceptable fixed fee; or

2. if a fixed fee is not agreed upon, then a fee based on the following percentages of the various portions of the Cost of the Work:

a. for costs incurred under Paragraphs 11.01.A.1 and 11.01.A.2, the Contractor's fee shall be 15 percent;

b. for costs incurred under Paragraph 11.01.A.3, the Contractor's fee shall be five percent;

c. where one or more tiers of subcontracts are on the basis of Cost of the Work plus a fee and no fixed fee is agreed upon, the intent of Paragraph 12.01.C.2.a is that the Subcontractor who actually performs the Work, at whatever tier, will be paid a fee of 15 percent of the costs incurred by such Subcontractor under Paragraphs 11.01.A.1 and 11.01.A.2 and that any higher tier Subcontractor and Contractor will each be paid a fee of five percent of the amount paid to the next lower tier Subcontractor;

d. no fee shall be payable on the basis of costs itemized under Paragraphs 11.01.A.4, 11.01.A.5, and 11.01.B;

e. the amount of credit to be allowed by Contractor to Owner for any change which results in a net decrease in cost will be the amount of the actual net decrease in cost plus a deduction in Contractor's fee by an amount equal to five percent of such net decrease; and

f. when both additions and credits are involved in any one change, the adjustment in Contractor's fee shall be computed on the basis of the net change in accordance with Paragraphs 12.01.C.2.a through 12.01.C.2.e, inclusive.

12.2 *Change of Contract Times*

A. The Contract Times may only be changed by a Change Order. Any Claim for an adjustment in the Contract Times shall be based on written notice submitted by the party making the Claim to the Engineer and the other party to the Contract in accordance with the provisions of Paragraph 10.05.

B. Any adjustment of the Contract Times covered by a Change Order or any Claim for an adjustment in the Contract Times will be determined in accordance with the provisions of this Article 12.

12.3 *Delays*

A. Where Contractor is prevented from completing any part of the Work within the Contract Times due to delay beyond the control of Contractor, the Contract Times will be extended in an amount equal to the time lost due to such delay if a Claim is made therefor as provided in Paragraph 12.02.A. Delays beyond the control of Contractor shall include, but not be limited to, acts or neglect by Owner, acts or neglect of utility owners or other contractors performing other work as contemplated by Article 7, fires, floods, epidemics, abnormal weather conditions, or acts of God.

B. If Owner, Engineer, or other contractors or utility owners performing other work for Owner as contemplated by Article 7, or anyone for whom Owner is responsible, delays, disrupts, or interferes with the performance or progress of the Work, then Contractor shall be entitled to an equitable adjustment in the Contract Price or the Contract Times, or both. Contractor's entitlement to an adjustment of the Contract Times is conditioned on such adjustment being essential to Contractor's ability to complete the Work within the Contract Times.

C. If Contractor is delayed in the performance or progress of the Work by fire, flood, epidemic, abnormal weather conditions, acts of God, acts or failures to act of utility owners not under the control of Owner, or other causes not the fault of and beyond control of Owner and Contractor, then Contractor shall be entitled to an equitable adjustment in Contract Times, if such adjustment is essential to Contractor's ability to complete the Work within the Contract Times. Such an adjustment shall be Contractor's sole and exclusive remedy for the delays described in this Paragraph 12.03.B.

1. delays caused by or within the control of Contractor; or

D. Owner, Engineer and the Related Entities of each of them shall not be liable to Contractor for any claims, costs, losses, or damages (including but not limited to all fees and charges of Engineers, architects, attorneys, and other professionals and all court or arbitration or other dispute resolution costs) sustained by Contractor on or in connection with any other project or anticipated project.

E. Contractor shall not be entitled to an adjustment in Contract Price or Contract Times for delays within the control of Contractor. Delays attributable to and within the control of a Subcontractor or Supplier shall be deemed to be delays within the control of Contractor.

ARTICLE 13 – TESTS AND INSPECTIONS; CORRECTION, REMOVAL OR ACCEPTANCE OF DEFECTIVE WORK

13.1 *Notice of Defects*

A. Prompt notice of all defective Work of which Owner or Engineer has actual knowledge will be given to Contractor. All defective Work may be rejected, corrected, or accepted as provided in this Article 13.

13.2 *Access to Work*

A. Owner, Engineer, their consultants and other representatives and personnel of Owner, independent testing laboratories, and governmental agencies with jurisdictional interests will have access to the Site and the Work at reasonable times for their observation, inspecting, and testing. Contractor shall provide them proper and safe conditions for such access and advise them of Contractor's Site safety procedures and programs so that they may comply therewith as applicable.

13.3 *Tests and Inspections*

A. Contractor shall give Engineer timely notice of readiness of the Work for all required inspections, tests, or approvals and shall cooperate with inspection and testing personnel to facilitate required inspections or tests.

B. Owner shall employ and pay for the services of an independent testing laboratory to perform all inspections, tests, or approvals required by the Contract Documents except:

1. for inspections, tests, or approvals covered by Paragraphs 13.03.C and 13.03.D below;

2. that costs incurred in connection with tests or inspections conducted pursuant to Paragraph 13.04.B shall be paid as provided in said Paragraph 13.04.C; and

3. as otherwise specifically provided in the Contract Documents.

C. If Laws or Regulations of any public body having jurisdiction require any Work (or part thereof) specifically to be inspected, tested, or approved by an employee or other representative of such public body, Contractor shall assume full responsibility for arranging and obtaining such inspections, tests, or approvals, pay all costs in connection therewith, and furnish Engineer the required certificates of inspection or approval.

D. Contractor shall be responsible for arranging and obtaining and shall pay all costs in connection with any inspections, tests, or approvals required for Owner's and Engineer's acceptance of materials or equipment to be incorporated in the Work; or acceptance of materials, mix designs, or equipment submitted for approval prior to Contractor's purchase thereof for incorporation in the Work. Such inspections, tests, or approvals shall be performed by organizations acceptable to Owner and Engineer.

E. If any Work (or the work of others) that is to be inspected, tested, or approved is covered by Contractor without written concurrence of Engineer, it must, if requested by Engineer, be uncovered for observation.

F. Uncovering Work as provided in Paragraph 13.03.E shall be at Contractor's expense unless Contractor has given Engineer timely notice of Contractor's intention to cover the same and Engineer has not acted with reasonable promptness in response to such notice.

13.4 *Uncovering Work*

A. If any Work is covered contrary to the written request of Engineer, it must, if requested by Engineer, be uncovered for Engineer's observation and replaced at Contractor's expense.

B. If Engineer considers it necessary or advisable that covered Work be observed by Engineer or inspected or tested by others, Contractor, at Engineer's request, shall uncover, expose, or otherwise make available for observation, inspection, or testing as Engineer may require, that portion of the Work in question, furnishing all necessary labor, material, and equipment.

C. If it is found that the uncovered Work is defective, Contractor shall pay all claims, costs, losses, and damages (including but not limited to all fees and charges of engineers, architects, attorneys, and other professionals and all court or arbitration or other dispute resolution costs) arising out of or relating to such uncovering, exposure, observation, inspection, and testing, and of satisfactory replacement or reconstruction (including but not limited to all costs of repair or replacement of work of others); and Owner shall be entitled to an appropriate decrease in the Contract Price. If the parties are unable to agree as to the amount thereof, Owner may make a Claim therefor as provided in Paragraph 10.05.

D. If, the uncovered Work is not found to be defective, Contractor shall be allowed an increase in the Contract Price or an extension of the Contract Times, or both, directly attributable to such uncovering, exposure, observation, inspection, testing, replacement, and reconstruction. If the

parties are unable to agree as to the amount or extent thereof, Contractor may make a Claim therefor as provided in Paragraph 10.05.

13.5 *Owner May Stop the Work*

A. If the Work is defective, or Contractor fails to supply sufficient skilled workers or suitable materials or equipment, or fails to perform the Work in such a way that the completed Work will conform to the Contract Documents, Owner may order Contractor to stop the Work, or any portion thereof, until the cause for such order has been eliminated; however, this right of Owner to stop the Work shall not give rise to any duty on the part of Owner to exercise this right for the benefit of Contractor, any Subcontractor, any Supplier, any other individual or entity, or any surety for, or employee or agent of any of them.

13.6 *Correction or Removal of Defective Work*

A. Promptly after receipt of notice, Contractor shall correct all defective Work, whether or not fabricated, installed, or completed, or, if the Work has been rejected by Engineer, remove it from the Project and replace it with Work that is not defective. Contractor shall pay all claims, costs, losses, and damages (including but not limited to all fees and charges of engineers, architects, attorneys, and other professionals and all court or arbitration or other dispute resolution costs) arising out of or relating to such correction or removal (including but not limited to all costs of repair or replacement of work of others).

B. When correcting defective Work under the terms of this Paragraph 13.06 or Paragraph 13.07, Contractor shall take no action that would void or otherwise impair Owner's special warranty and guarantee, if any, on said Work.

13.7 *Correction Period*

A. If within one year after the date of Substantial Completion (or such longer period of time as may be prescribed by the terms of any applicable special guarantee required by the Contract Documents) or by any specific provision of the Contract Documents, any Work is found to be defective, or if the repair of any damages to the land or areas made available for Contractor's use by Owner or permitted by Laws and Regulations as contemplated in Paragraph 6.11.A is found to be defective, Contractor shall promptly, without cost to Owner and in accordance with Owner's written instructions:

1. repair such defective land or areas; or

2. correct such defective Work; or

3. if the defective Work has been rejected by Owner, remove it from the Project and replace it with Work that is not defective, and

4. satisfactorily correct or repair or remove and replace any damage to other Work, to the work of others or other land or areas resulting therefrom.

B. If Contractor does not promptly comply with the terms of Owner's written instructions, or in an emergency where delay would cause serious risk of loss or damage, Owner may have the defective Work corrected or repaired or may have the rejected Work removed and replaced. All

claims, costs, losses, and damages (including but not limited to all fees and charges of engineers, architects, attorneys, and other professionals and all court or arbitration or other dispute resolution costs) arising out of or relating to such correction or repair or such removal and replacement (including but not limited to all costs of repair or replacement of work of others) will be paid by Contractor.

C. In special circumstances where a particular item of equipment is placed in continuous service before Substantial Completion of all the Work, the correction period for that item may start to run from an earlier date if so provided in the Specifications.

D. Where defective Work (and damage to other Work resulting therefrom) has been corrected or removed and replaced under this Paragraph 13.07, the correction period hereunder with respect to such Work will be extended for an additional period of one year after such correction or removal and replacement has been satisfactorily completed.

E. Contractor's obligations under this Paragraph 13.07 are in addition to any other obligation or warranty. The provisions of this Paragraph 13.07 shall not be construed as a substitute for or a waiver of the provisions of any applicable statute of limitation or repose.

13.8 *Acceptance of Defective Work*

A. If, instead of requiring correction or removal and replacement of defective Work, Owner (and, prior to Engineer's recommendation of final payment, Engineer) prefers to accept it, Owner may do so. Contractor shall pay all claims, costs, losses, and damages (including but not limited to all fees and charges of engineers, architects, attorneys, and other professionals and all court or arbitration or other dispute resolution costs) attributable to Owner's evaluation of and determination to accept such defective Work (such costs to be approved by Engineer as to reasonableness) and the diminished value of the Work to the extent not otherwise paid by Contractor pursuant to this sentence. If any such acceptance occurs prior to Engineer's recommendation of final payment, a Change Order will be issued incorporating the necessary revisions in the Contract Documents with respect to the Work, and Owner shall be entitled to an appropriate decrease in the Contract Price, reflecting the diminished value of Work so accepted. If the parties are unable to agree as to the amount thereof, Owner may make a Claim therefor as provided in Paragraph 10.05. If the acceptance occurs after such recommendation, an appropriate amount will be paid by Contractor to Owner.

13.9 *Owner May Correct Defective Work*

A. If Contractor fails within a reasonable time after written notice from Engineer to correct defective Work or to remove and replace rejected Work as required by Engineer in accordance with Paragraph 13.06.A, or if Contractor fails to perform the Work in accordance with the Contract Documents, or if Contractor fails to comply with any other provision of the Contract Documents, Owner may, after seven days written notice to Contractor, correct or remedy any such deficiency.

B. In exercising the rights and remedies under this Paragraph 13.09, Owner shall proceed expeditiously. In connection with such corrective or remedial action, Owner may exclude Contractor from all or part of the Site, take possession of all or part of the Work and suspend Contractor's services related thereto, take possession of Contractor's tools, appliances,

construction equipment and machinery at the Site, and incorporate in the Work all materials and equipment stored at the Site or for which Owner has paid Contractor but which are stored elsewhere. Contractor shall allow Owner, Owner's representatives, agents and employees, Owner's other contractors, and Engineer and Engineer's consultants access to the Site to enable Owner to exercise the rights and remedies under this Paragraph.

C. All claims, costs, losses, and damages (including but not limited to all fees and charges of engineers, architects, attorneys, and other professionals and all court or arbitration or other dispute resolution costs) incurred or sustained by Owner in exercising the rights and remedies under this Paragraph 13.09 will be charged against Contractor, and a Change Order will be issued incorporating the necessary revisions in the Contract Documents with respect to the Work; and Owner shall be entitled to an appropriate decrease in the Contract Price. If the parties are unable to agree as to the amount of the adjustment, Owner may make a Claim therefor as provided in Paragraph 10.05. Such claims, costs, losses and damages will include but not be limited to all costs of repair, or replacement of work of others destroyed or damaged by correction, removal, or replacement of Contractor's defective Work.

D. Contractor shall not be allowed an extension of the Contract Times because of any delay in the performance of the Work attributable to the exercise by Owner of Owner's rights and remedies under this Paragraph 13.09.

ARTICLE 14 – PAYMENTS TO CONTRACTOR AND COMPLETION

14.1 *Schedule of Values*

A. The Schedule of Values established as provided in Paragraph 2.07.A will serve as the basis for progress payments and will be incorporated into a form of Application for Payment acceptable to Engineer. Progress payments on account of Unit Price Work will be based on the number of units completed.

14.2 *Progress Payments*

A. *Applications for Payments*

1. At least 20 days before the date established in the Agreement for each progress payment (but not more often than once a month), Contractor shall submit to Engineer for review an Application for Payment filled out and signed by Contractor covering the Work completed as of the date of the Application and accompanied by such supporting documentation as is required by the Contract Documents. If payment is requested on the basis of materials and equipment not incorporated in the Work but delivered and suitably stored at the Site or at another location agreed to in writing, the Application for Payment shall also be accompanied by a bill of sale, invoice, or other documentation warranting that Owner has received the materials and equipment free and clear of all Liens and evidence that the materials and equipment are covered by appropriate property insurance or other arrangements to protect Owner's interest therein, all of which must be satisfactory to Owner.

2. Beginning with the second Application for Payment, each Application shall include an affidavit of Contractor stating that all previous progress payments received on account of

the Work have been applied on account to discharge Contractor's legitimate obligations associated with prior Applications for Payment.

3. The amount of retainage with respect to progress payments will be as stipulated in the Agreement.

B. *Review of Applications*

1. Engineer will, within 10 days after receipt of each Application for Payment, either indicate in writing a recommendation of payment and present the Application to Owner or return the Application to Contractor indicating in writing Engineer's reasons for refusing to recommend payment. In the latter case, Contractor may make the necessary corrections and resubmit the Application.

2. Engineer's recommendation of any payment requested in an Application for Payment will constitute a representation by Engineer to Owner, based on Engineer's observations on the Site of the executed Work as an experienced and qualified design professional and on Engineer's review of the Application for Payment and the accompanying data and schedules, that to the best of Engineer's knowledge, information and belief:

   a. the Work has progressed to the point indicated;

   b. the quality of the Work is generally in accordance with the Contract Documents (subject to an evaluation of the Work as a functioning whole prior to or upon Substantial Completion, to the results of any subsequent tests called for in the Contract Documents, to a final determination of quantities and classifications for Unit Price Work under Paragraph 9.07, and to any other qualifications stated in the recommendation); and

   c. the conditions precedent to Contractor's being entitled to such payment appear to have been fulfilled in so far as it is Engineer's responsibility to observe the Work.

3. By recommending any such payment Engineer will not thereby be deemed to have represented that:

   a. inspections made to check the quality or the quantity of the Work as it has been performed have been exhaustive, extended to every aspect of the Work in progress, or involved detailed inspections of the Work beyond the responsibilities specifically assigned to Engineer in the Contract Documents; or

   b. that there may not be other matters or issues between the parties that might entitle Contractor to be paid additionally by Owner or entitle Owner to withhold payment to Contractor.

4. Neither Engineer's review of Contractor's Work for the purposes of recommending payments nor Engineer's recommendation of any payment, including final payment, will impose responsibility on Engineer:

   a. to supervise, direct, or control the Work, or

b. for the means, methods, techniques, sequences, or procedures of construction, or the safety precautions and programs incident thereto, or

c. for Contractor's failure to comply with Laws and Regulations applicable to Contractor's performance of the Work, or

d. to make any examination to ascertain how or for what purposes Contractor has used the moneys paid on account of the Contract Price, or

e. to determine that title to any of the Work, materials, or equipment has passed to Owner free and clear of any Liens.

5. Engineer may refuse to recommend the whole or any part of any payment if, in Engineer's opinion, it would be incorrect to make the representations to Owner stated in Paragraph 14.02.B.2. Engineer may also refuse to recommend any such payment or, because of subsequently discovered evidence or the results of subsequent inspections or tests, revise or revoke any such payment recommendation previously made, to such extent as may be necessary in Engineer's opinion to protect Owner from loss because:

a. the Work is defective, or completed Work has been damaged, requiring correction or replacement;

b. the Contract Price has been reduced by Change Orders;

c. Owner has been required to correct defective Work or complete Work in accordance with Paragraph 13.09; or

d. Engineer has actual knowledge of the occurrence of any of the events enumerated in Paragraph 15.02.A.

C. *Payment Becomes Due*

1. Ten days after presentation of the Application for Payment to Owner with Engineer's recommendation, the amount recommended will (subject to the provisions of Paragraph 14.02.D) become due, and when due will be paid by Owner to Contractor.

D. *Reduction in Payment*

1. Owner may refuse to make payment of the full amount recommended by Engineer because:

a. claims have been made against Owner on account of Contractor's performance or furnishing of the Work;

b. Liens have been filed in connection with the Work, except where Contractor has delivered a specific bond satisfactory to Owner to secure the satisfaction and discharge of such Liens;

c. the Contractor's performance or furnishing of the Work is inconsistent with funding Agency requirements;

d. there are other items entitling Owner to a set-off against the amount recommended; or

e. Owner has actual knowledge of the occurrence of any of the events enumerated in Paragraphs 14.02.B.5.a through 14.02.B.5.c or Paragraph 15.02.A.

2. If Owner refuses to make payment of the full amount recommended by Engineer, Owner will give Contractor immediate written notice (with a copy to Engineer) stating the reasons for such action and promptly pay Contractor any amount remaining after deduction of the amount so withheld. Owner shall promptly pay Contractor the amount so withheld, or any adjustment thereto agreed to by Owner and Contractor, when Contractor corrects to Owner's satisfaction the reasons for such action.

3. If it is subsequently determined that Owner's refusal of payment was not justified, the amount wrongfully withheld shall be treated as an amount due as determined by Paragraph 14.02.C.1.

14.3 *Contractor's Warranty of Title*

A. Contractor warrants and guarantees that title to all Work, materials, and equipment covered by any Application for Payment, whether incorporated in the Project or not, will pass to Owner no later than the time of payment free and clear of all Liens.

14.4 *Substantial Completion*

A. When Contractor considers the entire Work ready for its intended use Contractor shall notify Owner and Engineer in writing that the entire Work is substantially complete (except for items specifically listed by Contractor as incomplete) and request that Engineer issue a certificate of Substantial Completion.

B. Promptly after Contractor's notification, Owner, Agency, Contractor, and Engineer shall make a prefinal inspection of the Work to determine the status of completion. If Engineer does not consider the Work substantially complete, Engineer will notify Contractor in writing giving the reasons therefor.

C. If Engineer considers the Work substantially complete, Engineer will deliver to Owner a tentative certificate of Substantial Completion which shall fix the date of Substantial Completion. There shall be attached to the certificate a tentative list of items to be completed or corrected before final payment. Owner shall have seven days after receipt of the tentative certificate during which to make written objection to Engineer as to any provisions of the certificate or attached list. If, after considering such objections, Engineer concludes that the Work is not substantially complete, Engineer will within 14 days after submission of the tentative certificate to Owner notify Contractor in writing, stating the reasons therefor. If, after consideration of Owner's objections, Engineer considers the Work substantially complete, Engineer will within said 14 days execute and deliver to Owner and Contractor a definitive certificate of Substantial Completion (with a revised tentative list of items to be completed or corrected) reflecting such changes from the tentative certificate as Engineer believes justified after consideration of any objections from Owner.

D. At the time of delivery of the tentative certificate of Substantial Completion, Engineer will deliver to Owner and Contractor a written recommendation as to division of responsibilities pending final payment between Owner and Contractor with respect to security, operation, safety, and protection of the Work, maintenance, heat, utilities, insurance, and warranties and guarantees. Unless Owner and Contractor agree otherwise in writing and so inform Engineer in writing prior to Engineer's issuing the definitive certificate of Substantial Completion, Engineer's aforesaid recommendation will be binding on Owner and Contractor until final payment.

E. Owner shall have the right to exclude Contractor from the Site after the date of Substantial Completion subject to allowing Contractor reasonable access to complete or correct items on the tentative list.

14.5 *Partial Utilization*

A. Prior to Substantial Completion of all the Work, Owner may use or occupy any substantially completed part of the Work which has specifically been identified in the Contract Documents, or which Owner, Engineer, and Contractor agree constitutes a separately functioning and usable part of the Work that can be used by Owner for its intended purpose without significant interference with Contractor's performance of the remainder of the Work, subject to the following conditions.

1. Owner at any time may request Contractor in writing to permit Owner to use or occupy any such part of the Work which Owner believes to be ready for its intended use and substantially complete. If and when Contractor agrees that such part of the Work is substantially complete, Contractor will certify to Owner and Engineer that such part of the Work is substantially complete and request Engineer to issue a certificate of Substantial Completion for that part of the Work.

2. Contractor at any time may notify Owner and Engineer in writing that Contractor considers any such part of the Work ready for its intended use and substantially complete and request Engineer to issue a certificate of Substantial Completion for that part of the Work.

3. Within a reasonable time after either such request, Owner, Contractor, and Engineer shall make an inspection of that part of the Work to determine its status of completion. If Engineer does not consider that part of the Work to be substantially complete, Engineer will notify Owner and Contractor in writing giving the reasons therefor. If Engineer considers that part of the Work to be substantially complete, the provisions of Paragraph 14.04 will apply with respect to certification of Substantial Completion of that part of the Work and the division of responsibility in respect thereof and access thereto.

4. No use or occupancy or separate operation of part of the Work may occur prior to compliance with the requirements of Paragraph 5.10 regarding property insurance.

14.6 *Final Inspection*

A. Upon written notice from Contractor that the entire Work or an agreed portion thereof is complete, Engineer will promptly make a final inspection with Owner, Agency, and Contractor and will notify Contractor in writing of all particulars in which this inspection reveals that the

Work is incomplete or defective. Contractor shall immediately take such measures as are necessary to complete such Work or remedy such deficiencies.

14.7 *Final Payment*

A. *Application for Payment*

1. After Contractor has, in the opinion of Engineer, satisfactorily completed all corrections identified during the final inspection and has delivered, in accordance with the Contract Documents, all maintenance and operating instructions, schedules, guarantees, bonds, certificates or other evidence of insurance certificates of inspection, marked-up record documents (as provided in Paragraph 6.12), and other documents, Contractor may make application for final payment following the procedure for progress payments.

2. The final Application for Payment shall be accompanied (except as previously delivered) by:

   a. all documentation called for in the Contract Documents, including but not limited to the evidence of insurance required by Paragraph 5.04.B.7;

   b. consent of the surety, if any, to final payment;

   c. a list of all Claims against Owner that Contractor believes are unsettled; and

   d. complete and legally effective releases or waivers (satisfactory to Owner) of all Lien rights arising out of or Liens filed in connection with the Work.

3. In lieu of the releases or waivers of Liens specified in Paragraph 14.07.A.2 and as approved by Owner, Contractor may furnish receipts or releases in full and an affidavit of Contractor that: (i) the releases and receipts include all labor, services, material, and equipment for which a Lien could be filed; and (ii) all payrolls, material and equipment bills, and other indebtedness connected with the Work for which Owner or Owner's property might in any way be responsible have been paid or otherwise satisfied. If any Subcontractor or Supplier fails to furnish such a release or receipt in full, Contractor may furnish a bond or other collateral satisfactory to Owner to indemnify Owner against any Lien.

B. *Engineer's Review of Application and Acceptance*

1. If, on the basis of Engineer's observation of the Work during construction and final inspection, and Engineer's review of the final Application for Payment and accompanying documentation as required by the Contract Documents, Engineer is satisfied that the Work has been completed and Contractor's other obligations under the Contract Documents have been fulfilled, Engineer will, within ten days after receipt of the final Application for Payment, indicate in writing Engineer's recommendation of payment and present the Application for Payment to Owner for payment. At the same time Engineer will also give written notice to Owner and Contractor that the Work is acceptable subject to the provisions of Paragraph 14.09. Otherwise, Engineer will return the Application for Payment to Contractor, indicating in writing the reasons for refusing to recommend final payment, in which case Contractor shall make the necessary corrections and resubmit the Application for Payment.

C. *Payment Becomes Due*

1. Thirty days after the presentation to Owner of the Application for Payment and accompanying documentation, the amount recommended by Engineer, less any sum Owner is entitled to set off against Engineer's recommendation, including but not limited to liquidated damages, will become due and will be paid by Owner to Contractor.

14.8 *Final Completion Delayed*

A. If, through no fault of Contractor, final completion of the Work is significantly delayed, and if Engineer so confirms, Owner shall, upon receipt of Contractor's final Application for Payment (for Work fully completed and accepted) and recommendation of Engineer, and without terminating the Contract, make payment of the balance due for that portion of the Work fully completed and accepted. If the remaining balance to be held by Owner for Work not fully completed or corrected is less than the retainage stipulated in the Agreement, and if bonds have been furnished as required in Paragraph 5.01, the written consent of the surety to the payment of the balance due for that portion of the Work fully completed and accepted shall be submitted by Contractor to Engineer with the Application for such payment. Such payment shall be made under the terms and conditions governing final payment, except that it shall not constitute a waiver of Claims. The remaining balance of any sum included in the final Application for Payment but held by OWNER for Work not fully completed and accepted will become due when the Work is fully completed and accepted.

14.9 *Waiver of Claims*

A. The making and acceptance of final payment will constitute:

1. a waiver of all Claims by Owner against Contractor, except Claims arising from unsettled Liens, from defective Work appearing after final inspection pursuant to Paragraph 14.06, from failure to comply with the Contract Documents or the terms of any special guarantees specified therein, or from Contractor's continuing obligations under the Contract Documents; and

2. a waiver of all Claims by Contractor against Owner other than those previously made in accordance with the requirements herein and expressly acknowledged by Owner in writing as still unsettled.

ARTICLE 15 – SUSPENSION OF WORK AND TERMINATION

15.1 *Owner May Suspend Work*

A. At any time and without cause, Owner may suspend the Work or any portion thereof for a period of not more than 90 consecutive days by notice in writing to Contractor and Engineer which will fix the date on which Work will be resumed. Contractor shall resume the Work on the date so fixed. Contractor shall be granted an adjustment in the Contract Price or an extension of the Contract Times, or both, directly attributable to any such suspension if Contractor makes a Claim therefor as provided in Paragraph 10.05.

15.2 *Owner May Terminate for Cause*

A. The occurrence of any one or more of the following events will justify termination for cause:

1. Contractor's persistent failure to perform the Work in accordance with the Contract Documents (including, but not limited to, failure to supply sufficient skilled workers or suitable materials or equipment or failure to adhere to the Progress Schedule established under Paragraph 2.07 as adjusted from time to time pursuant to Paragraph 6.04);

2. Contractor's disregard of Laws or Regulations of any public body having jurisdiction;

3. Contractor's disregard of the authority of Engineer; or

4. Contractor's violation in any substantial way of any provisions of the Contract Documents.

B. If one or more of the events identified in Paragraph 15.02.A occur, Owner may, after giving Contractor (and surety) seven days written notice of its intent to terminate the services of Contractor:

1. exclude Contractor from the Site, and take possession of the Work and of all Contractor's tools, appliances, construction equipment, and machinery at the Site, and use the same to the full extent they could be used by Contractor (without liability to Contractor for trespass or conversion),

2. incorporate in the Work all materials and equipment stored at the Site or for which Owner has paid Contractor but which are stored elsewhere, and

3. complete the Work as Owner may deem expedient.

C. If Owner proceeds as provided in Paragraph 15.02.B, Contractor shall not be entitled to receive any further payment until the Work is completed. If the unpaid balance of the Contract Price exceeds all claims, costs, losses, and damages (including but not limited to all fees and charges of engineers, architects, attorneys, and other professionals and all court or arbitration or other dispute resolution costs) sustained by Owner arising out of or relating to completing the Work, such excess will be paid to Contractor. If such claims, costs, losses, and damages exceed such unpaid balance, Contractor shall pay the difference to Owner. Such claims, costs, losses, and damages incurred by Owner will be reviewed by Engineer as to their reasonableness and, when so approved by Engineer, incorporated in a Change Order. When exercising any rights or remedies under this Paragraph Owner shall not be required to obtain the lowest price for the Work performed.

D. Notwithstanding Paragraphs 15.02.B and 15.02.C, Contractor's services will not be terminated if Contractor begins within seven days of receipt of notice of intent to terminate to correct its failure to perform and proceeds diligently to cure such failure within no more than 30 days of receipt of said notice.

E. Where Contractor's services have been so terminated by Owner, the termination will not affect any rights or remedies of Owner against Contractor then existing or which may thereafter accrue. Any retention or payment of moneys due Contractor by Owner will not release Contractor from liability.

F. If and to the extent that Contractor has provided a performance bond under the provisions of Paragraph 5.01.A, the termination procedures of that bond shall supersede the provisions of Paragraphs 15.02.B, and 15.02.C.

15.3 *Owner May Terminate For Convenience*

A. Upon seven days written notice to Contractor and Engineer, Owner may, without cause and without prejudice to any other right or remedy of Owner, terminate the Contract. In such case, Contractor shall be paid for (without duplication of any items):

1. completed and acceptable Work executed in accordance with the Contract Documents prior to the effective date of termination, including fair and reasonable sums for overhead and profit on such Work;

2. expenses sustained prior to the effective date of termination in performing services and furnishing labor, materials, or equipment as required by the Contract Documents in connection with uncompleted Work, plus fair and reasonable sums for overhead and profit on such expenses;

3. all claims, costs, losses, and damages (including but not limited to all fees and charges of engineers, architects, attorneys, and other professionals and all court or arbitration or other dispute resolution costs) incurred in settlement of terminated contracts with Subcontractors, Suppliers, and others; and

4. reasonable expenses directly attributable to termination.

B. Contractor shall not be paid on account of loss of anticipated profits or revenue or other economic loss arising out of or resulting from such termination.

15.4 *Contractor May Stop Work or Terminate*

A. If, through no act or fault of Contractor, (i) the Work is suspended for more than 90 consecutive days by Owner or under an order of court or other public authority, or (ii) Engineer fails to act on any Application for Payment within 30 days after it is submitted, or (iii) Owner fails for 30 days to pay Contractor any sum finally determined to be due, then Contractor may, upon seven days written notice to Owner and Engineer, and provided Owner or Engineer do not remedy such suspension or failure within that time, terminate the Contract and recover from Owner payment on the same terms as provided in Paragraph 15.03.

B. In lieu of terminating the Contract and without prejudice to any other right or remedy, if Engineer has failed to act on an Application for Payment within 30 days after it is submitted, or Owner has failed for 30 days to pay Contractor any sum finally determined to be due, Contractor may, seven days after written notice to Owner and Engineer, stop the Work until payment is made of all such amounts due Contractor, including interest thereon. The provisions of this Paragraph 15.04 are not intended to preclude Contractor from making a Claim under Paragraph 10.05 for an adjustment in Contract Price or Contract Times or otherwise for expenses or damage directly attributable to Contractor's stopping the Work as permitted by this Paragraph.

ARTICLE 16 – DISPUTE RESOLUTION

16.1 *Methods and Procedures*

A. Owner and Contractor may mutually request mediation of any Claim submitted to Engineer for a decision under Paragraph 10.05 before such decision becomes final and binding. The mediation will be governed by the Construction Industry Mediation Rules of the American Arbitration Association in effect as of the Effective Date of the Agreement. The request for mediation shall be submitted in writing to the American Arbitration Association. Timely submission of the request shall stay the effect of Paragraph 10.05.E.

B. Owner and Contractor shall participate in the mediation process in good faith. The process hall be concluded within 60 days of filing of the request. The date of termination of the mediation shall be determined by application of the mediation rules referenced above.

C. If the claim is not resolved by mediation, Engineer's action under Paragraph 10.05.C or a denial pursuant to Paragraphs 10.05.C.3 or 10.05.D shall become final and binding 30 days after termination of the mediation unless, within that time period, Owner or Contractor:

1. elects in writing to invoke any dispute resolution process provided for in the Supplementary Conditions, or

2. agrees with the other party to submit the Claim to another dispute resolution process, or

3. gives written notice to the other party of their intent to submit the Claim to a court of competent jurisdiction.

ARTICLE 17 – MISCELLANEOUS

17.1 *Giving Notice*

A. Whenever any provision of the Contract Documents requires the giving of written notice, it will be deemed to have been validly given if:

1. delivered in person to the individual or to a member of the firm or to an officer of the corporation for whom it is intended, or

2. delivered at or sent by registered or certified mail, postage prepaid, to the last business address known to the giver of the notice.

17.2 *Computation of Times*

A. When any period of time is referred to in the Contract Documents by days, it will be computed to exclude the first and include the last day of such period. If the last day of any such period falls on a Saturday or Sunday or on a day made a legal holiday by the law of the applicable jurisdiction, such day will be omitted from the computation.

17.3 *Cumulative Remedies*

A. The duties and obligations imposed by these General Conditions and the rights and remedies available hereunder to the parties hereto are in addition to, and are not to be construed in any way as a limitation of, any rights and remedies available to any or all of them which are otherwise imposed or available by Laws or Regulations, by special warranty or guarantee, or by other provisions of the Contract Documents. The provisions of this Paragraph will be as effective as if repeated specifically in the Contract Documents in connection with each particular duty, obligation, right, and remedy to which they apply.

17.4 *Survival of Obligations*

A. All representations, indemnifications, warranties, and guarantees made in, required by, or given in accordance with the Contract Documents, as well as all continuing obligations indicated in the Contract Documents, will survive final payment, completion, and acceptance of the Work or termination or completion of the Contract or termination of the services of Contractor.

17.5 *Controlling Law*

A. This Contract is to be governed by the law of the state in which the Project is located.

17.6 *Headings*

A. Article and paragraph headings are inserted for convenience only and do not constitute parts of these General Conditions.

ARTICLE 18 – FEDERAL REQUIREMENTS

18.1 *Agency Not a Party*

A. This Contract is expected to be funded in part with funds provided by Agency. Neither Agency, nor any of its departments, entities, or employees is a party to this Contract.

18.2 *Contract Approval*

A. Owner and Contractor will furnish Owner's attorney such evidence as required so that Owner's attorney can complete and execute the following "Certificate of Owner's Attorney" (Exhibit GC-A) before Owner submits the executed Contract Documents to Agency for approval.

B. Concurrence by Agency in the award of the Contract is required before the Contract is effective.

18.3 *Conflict of Interest*

A. Contractor may not knowingly contract with a supplier or manufacturer if the individual or entity who prepared the plans and specifications has a corporate or financial affiliation with the supplier or manufacturer.

B. Owner's officers, employees, or agents shall not engage in the award or administration of this Contract if a conflict of interest, real or apparent, would be involved. Such a conflict would

arise when: (i) the employee, officer or agent; (ii) any member of their immediate family; (iii) their partner or (iv) an organization that employs, or is about to employ, any of the above, has a financial interest in Contractor. Owner's officers, employees, or agents shall neither solicit nor accept gratuities, favors or anything of monetary value from Contractor or subcontractors.

18.4 *Gratuities*

A. If Owner finds after a notice and hearing that Contractor, or any of Contractor's agents or representatives, offered or gave gratuities (in the form of entertainment, gifts, or otherwise) to any official, employee, or agent of Owner or Agency in an attempt to secure this Contract or favorable treatment in awarding, amending, or making any determinations related to the performance of this Contract, Owner may, by written notice to Contractor, terminate this Contract. Owner may also pursue other rights and remedies that the law or this Contract provides. However, the existence of the facts on which Owner bases such findings shall be an issue and may be reviewed in proceedings under the dispute resolution provisions of this Contract.

B. In the event this Contract is terminated as provided in paragraph 18.04.A, Owner may pursue the same remedies against Contractor as it could pursue in the event of a breach of this Contract by Contractor. As a penalty, in addition to any other damages to which it may be entitled by law, Owner may pursue exemplary damages in an amount (as determined by Owner) which shall not be less than three nor more than ten times the costs Contractor incurs in providing any such gratuities to any such officer or employee.

18.5 *Audit and Access to Records*

A. For all negotiated contracts and negotiated modifications (except those of $10,000 or less), Owner, Agency, the Comptroller General, or any of their duly authorized representatives, shall have access to any books, documents, papers, and records of the Contractor, which are pertinent to the Contract, for the purpose of making audits, examinations, excerpts and transcriptions. Contractor shall maintain all required records for three years after final payment is made and all other pending matters are closed.

18.6 *Small, Minority and Women's Businesses*

A. If Contractor intends to let any subcontracts for a portion of the work, Contractor shall take affirmative steps to assure that small, minority and women's businesses are used when possible as sources of supplies, equipment, construction, and services. Affirmative steps shall consist of: (1) including qualified small, minority and women's businesses on solicitation lists; (2) assuring that small, minority and women's businesses are solicited whenever they are potential sources; (3) dividing total requirements when economically feasible, into small tasks or quantities to permit maximum participation of small, minority, and women's businesses; (4) establishing delivery schedules, where the requirements of the work permit, which will encourage participation by small, minority and women's businesses; (5) using the services and assistance of the Small Business Administration and the Minority Business Development Agency of the U.S. Department of Commerce; (6) requiring each party to a subcontract to take the affirmative steps of this section; and (7) Contractor is encouraged to procure goods and services from labor surplus area firms.

18.7 *Anti-Kickback*

A. Contractor shall comply with the Copeland Anti-Kickback Act (18 USC 874 and 40 USC 276c) as supplemented by Department of Labor regulations (29 CFR Part 3, "Contractors and Subcontractors on Public Buildings or Public Works Financed in Whole or in Part by Loans or Grants of the United States"). The Act provides that Contractor or subcontractor shall be prohibited from inducing, by any means, any person employed in the construction, completion, or repair of public facilities, to give up any part of the compensation to which they are otherwise entitled. Owner shall report all suspected or reported violations to Agency.

18.8 *Clean Air and Pollution Control Acts*

A. If this Contract exceeds $100,000, Contractor shall comply with all applicable standards, orders or regulations issued pursuant to the Clean Air Act (42 USC 7401 *et seq.*) and the Federal Water Pollution Control Act as amended (33 USC 1251 *et seq*.). Contractor will report violations to the Agency and the Regional Office of the EPA.

18.9 *State Energy Policy*

A. Contractor shall comply with the Energy Policy and Conservation Act (P.L. 94-163). Mandatory standards and policies relating to energy efficiency, contained in any applicable State Energy Conservation Plan, shall be utilized.

18.10 *Equal Opportunity Requirements*

A. If this Contract exceeds $10,000, Contractor shall comply with Executive Order 11246, "Equal Employment Opportunity," as amended by Executive Order 11375, "Amending Executive Order 11246 Relating to Equal Employment Opportunity," and as supplemented by regulations at 41 CFR part 60, "Office of Federal Contract Compliance Programs, Equal Employment Opportunity, Department of Labor."

B. Contractor's compliance with Executive Order 11246 shall be based on its implementation of the Equal Opportunity Clause, specific affirmative active obligations required by the Standard Federal Equal Employment Opportunity Construction Contract Specifications, as set forth in 41 CFR Part 60-4 and its efforts to meet the goals established for the geographical area where the Contract is to be performed. The hours of minority and female employment and training must be substantially uniform throughout the length of the Contract, and in each trade, and Contractor shall make a good faith effort to employ minorities and women evenly on each of its projects. The transfer of minority or female employees or trainees from Contractor to Contractor or from project to project for the sole purpose of meeting Contractor's goals shall be a violation of the Contract, the Executive Order, and the regulations in 41 CFR Part 60-4. Compliance with the goals will be measured against the total work hours performed.

C. Contractor shall provide written notification to the Director of the Office of Federal Contract Compliance Programs within 10 working days of award of any construction subcontract in excess of $10,000 at any tier for construction work under the Contract resulting from this solicitation. The notification shall list the name, address, and telephone number of the subcontractor; employer identification number; estimated dollar amount of subcontract;

estimated starting and completion dates of the subcontract; and the geographical area in which the Contract is to be performed.

18.11 *Restrictions on Lobbying*

A. Contractor and each subcontractor shall comply with Restrictions on Lobbying (Public Law 101-121, Section 319) as supplemented by applicable Agency regulations. This Law applies to the recipients of contracts and subcontracts that exceed $100,000 at any tier under a Federal loan that exceeds $150,000 or a Federal grant that exceeds $100,000. If applicable, Contractor must complete a certification form on lobbying activities related to a specific Federal loan or grant that is a funding source for this Contract. Each tier certifies to the tier above that it will not and has not used Federal appropriated funds to pay any person or organization for influencing or attempting to influence an officer or employee of any agency, a member of Congress, or an employee of a member of Congress in connection with obtaining any Federal contract, grant, or any other award covered by 31 USC 1352. Each tier shall disclose any lobbying with non-Federal funds that takes place in connection with obtaining any Federal award. Certifications and disclosures are forwarded from tier to tier up to the Owner. Necessary certification and disclosure forms shall be provided by Owner.

18.12 *Environmental Requirements*

A. When constructing a project involving trenching and/or other related earth excavations, Contractor shall comply with the following environmental constraints:

1. Wetlands – When disposing of excess, spoil, or other construction materials on public or private property, Contractor shall not fill in or otherwise convert wetlands.

2. Floodplains – When disposing of excess, spoil, or other construction materials on public or private property, Contractor shall not fill in or otherwise convert 100 year floodplain areas delineated on the latest Federal Emergency Management Agency Floodplain Maps, or other appropriate maps, i.e., alluvial soils on NRCS Soil Survey Maps.

3. Historic Preservation – Any excavation by Contractor that uncovers an historical or archaeological artifact shall be immediately reported to Owner and a representative of Agency. Construction shall be temporarily halted pending the notification process and further directions issued by Agency after consultation with the State Historic Preservation Officer (SHPO).

4. Endangered Species – Contractor shall comply with the Endangered Species Act, which provides for the protection of endangered and/or threatened species and critical habitat. Should any evidence of the presence of endangered and/or threatened species or their critical habitat be brought to the attention of Contractor, Contractor will immediately report this evidence to Owner and a representative of Agency. Construction shall be temporarily halted pending the notification process and further directions issued by Agency after consultation with the U.S. Fish and Wildlife Service.

EXHIBIT GC-A

Certificate of Owner's Attorney

I, the undersigned,_____, the duly authorized and acting legal representative of_____, do hereby certify as follows:

I have examined the attached Contract(s) and performance and payment bond(s) and the manner of execution thereof, and I am of the opinion that each of the aforesaid agreements is adequate and has been duly executed by the proper parties thereto acting through their duly authorized representatives; that said representatives have full power and authority to execute said agreements on behalf of the respective parties named thereon; and that the foregoing agreements constitute valid and legally binding obligations upon the parties executing the same in accordance with the terms, conditions, and provisions thereof.

_____

Date: _____

Section 1.22 RUS Supplementary Conditions

RUS Bulletin 1780-26 Exhibit H

Supplementary Conditions

These Supplementary Conditions amend or supplement the Standard General Conditions of the Construction Contract (No. C-700, 2007 Edition) and other provisions of the Contract Documents as indicated below. All provisions that are not so amended or supplemented remain in full force and effect.

The terms used in these Supplementary Conditions will have the meanings indicated in the General Conditions. Additional terms used in these Supplementary Conditions have the meanings stated below, which are applicable to both the singular and plural thereof.

TABLE OF CONTENTS

		Page
SC 1.01.A.2	Agency	1
SC-1.01.A.3	Application for Payment	1
SC-1.01.A.9	Change Order	2
SC-1.01.A.19	Engineer's Consultants	2
SC-3.06.A.1	*Use of Electronic Data*	*2*
{SC-4.02	*Subsurface and Physical Conditions*	*2}*
{SC-4.06	*Hazardous Environmental Condition at Site*	*3}*
SC-5.04	Contractor's Liability Insurance	3
SC-6.05.C	Substitutes and "Or-Equals", Engineer's Evaluation	5
SC-6.06	Concerning Subcontractors, Suppliers, and Others	5
{SC-6.10	*Taxes*	*5}*
{SC-7.01.A	*Related Work at Site*	*6}*
{SC-7.02.A.1	*Coordination*	*6}*
SC-9.03.A	Project Representative	6
SC-14.02.A.3	Retainage	6
SC-14.02.A.4	Applications for Payment	6
SC-14.02.C.1	Payment Becomes Due	6
{SC-17.07	*Tribal Sovereignty*	*7}*
SC-18	Federal Requirements	7

SC-1.01.A.2. Add the following new Paragraph after Paragraph 1.01.A.1:

The Project is financed in whole or in part by USDA Rural Utilities Service pursuant to the Consolidated Farm and Rural Development Act (7 USC Section 1921 et seq.). The Rural Utilities Service programs are administered through the USDA Rural Development offices; therefore, the Agency for these documents is USDA Rural Development. *{add other funding sources and modify when necessary.}*

SC-1.01.A.3. Add the following language to the end of Paragraph 1.01.A.3:

The Application for Payment form to be used on this Project is EJCDC No. C-620. The Agency must approve all Applications for Payment before payment is made.

SC-1.01.A.9. Add the following language to the end of Paragraph 1.01.A.9:

The Change Order form to be used on this Project is EJCDC No. C-941. Agency approval is required before Change Orders are effective.

SC-1.01.A.19. Add the following language to the end of Paragraph 1.01.A.19:

The Engineer's Consultants on this project are: *{list all consultants}.*

{If the use of electronic data, electronic media, or electronic project monitoring is planned for this Project, then CONCENSUS DOCS form 200.2 may be added to the Construction Contract as an Exhibit. If so, add the following language to the Supplementary Conditions.

SC – 3.06.A.1. Add the following new Paragraph immediately after Paragraph 3.06.A

1. Special requirements for electronic data apply to this Project. See attached Exhibit entitled "Electronic Communications Protocol Addendum," Consensus DOCS form # 200.2.}

SC-4.02. Add the following new paragraphs immediately after Paragraph 4.02.B:

C. In the preparation of Drawings and Specifications, Engineer relied upon the following reports of exploration and tests of subsurface conditions at the Site:

    1. See EJCDC No.C-800 for examples.

D. In the preparation of Drawings and Specifications, Engineer relied upon the following drawings of physical conditions in or relating to existing surface and subsurface structures (except Underground Facilitates) which are at or contiguous to the Site:

    1. See EJCDC No. C-800 for examples.

E. Copies of reports and drawings itemized in SC-4.02.C and SC-4.02.D that are not included with Bidding Documents may be examined at _____ _____during regular business hours. These reports and drawings are not part of the Contract Documents, but the "technical data" contained therein upon which the Contractor may rely as identified and established above are incorporated therein by reference. Contractor is not entitled to rely upon other information and data utilized by Engineer in the preparation of the Drawings and Specifications.

OR

SC-4.02. Delete Paragraphs 4.02.A and 4.02.B in their entirety and insert the following:

A. No reports or explorations or tests of subsurface conditions at or contiguous to the Site are known to the Owner or Engineer.}

{SC-4.06. Add the following new paragraphs immediately after Paragraph 4.06.A:

1. In the preparation of Drawings and Specifications, Engineer relied upon the following reports of Hazardous Environmental Conditions at the Site:

    a. See EJCDC No.C-800 for examples.

2. In the preparation of Drawings and Specifications, Engineer relied upon the following drawings of Hazardous Environmental Conditions which are at or contiguous to the Site:

    a. See EJCDC No. C-800 for examples.

3. Copies of reports and drawings itemized in SC-4.06.A.1 and SC-4.06.A.2 that are not included with Bidding Documents may be examined at _____ _____ during regular business hours. These reports and drawings are not part of the Contract Documents, but the "technical data" contained therein upon which the Contractor may rely as identified and established above are incorporated therein by reference. Contractor is not entitled to rely upon other information and data utilized by Engineer in the preparation of the Drawings and Specifications.

OR

SC-4.06. Delete Paragraphs 4.06.A and 4.06.B in their entirety and insert the following:

A. No reports or drawings of Hazardous Environmental Conditions at or contiguous to the Site are known to the Owner or Engineer.

B. Not used.

SC-5.04. Add the following new paragraph immediately after Paragraph 5.04.B:

C. The limits of liability for insurance required by Paragraph 5.04 of the General Conditions shall provide coverage for not less than the following amounts or greater where required by Laws and Regulations:

1. Workers' Compensation, and related coverages under Paragraphs 5.04.A.1 and A.2 of the General Conditions:

a.	State:	Statutory
b.	Applicable Federal (e.g., Longshoremen's)	Statutory
c.	Employer's Liability	*{$ 500,000}*

2. Contractor's General Liability under Paragraphs 5.04.A.3 through A.6 of the General Conditions which shall include completed operations and product liability coverages and eliminate the exclusion with respect to property under the care, custody, and control of the Contractor:

   a. General Aggregate *{$ 2,000,000}*
   b. Products - Completed Operations Aggregate *{$ 1,000,000}*
   c. Personal and Advertising Injury *{$ 1,000,000}*
   d. Each Occurrence (Bodily Injury and Property Damage) *{$ 1,000,000}*
   e. Property Damage liability insurance will provide Explosion, Collapse, and Underground coverages where applicable.
   f. Excess or Umbrella Liability
      1) General Aggregate *{$ 5,000,000}*
      2) Each Occurrence *{$ 5,000,000}*

3. Automobile Liability under Paragraph 5.04.A.6 of the General Conditions:

   a. Bodily Injury:
      Each Person *{$ 1,000,000}*
      Each Accident *{$ 1,000,000}*
   b. Property Damage:
      Each Accident *{$ 1,000,000}*
   c. Combined Single Limit of *{$ 1,000,000}*

4. The Contractual Liability coverage required by paragraph 5.04.B.4 of the General Conditions shall provide coverage for not less than the following amounts:

   a. Bodily Injury:
      Each Person *{$ 2,000,000}*
      Each Accident *{$ 2,000,000}*
   b. Property Damage:
      Each Accident *{$ 2,000,000}*
      Annual Aggregate *{$ 2,000,000}*

{5. List additional types and amounts of insurance that may be required by Owner.}

{6. List by name other persons or entities to be included on policy as additional insureds.}

SC-6.05.C. Amend the paragraph by making two subparagraphs under the title C. Engineer's Evaluation. The paragraph text is retitled, 6.05.C.2 After Effective Date of Agreement. A new paragraph is added before this paragraph to read as follows:

1. During Bidding. The Contract, if awarded, will be on the basis of materials and equipment specified or described in the Bidding Documents, or "or-equal" materials and equipment as defined in paragraph 6.05 of the General Conditions, or those substitute materials and equipment approved by the Engineer and identified by Addendum. The materials and equipment described in the Bidding Documents establish a standard of required type, function, and quality to be met by any proposed substitute or "or-equal" item. Request for Engineer's clarification of materials and equipment considered "or-equal" prior to the Effective Date of the Agreement must be received by the Engineer at least 5 days prior to the date for receipt of Bids. No item of material or equipment will be considered by Engineer as a substitute unless written request for approval has been submitted by Bidder and has been received by Engineer at least 15 days prior to the date for receipt of Bids. Each request shall conform to the requirements of Paragraph 6.05 of the General Conditions. The burden of proof of the merit of the proposed item is upon the Bidder. Engineer's decision of approval or disapproval of a proposed item will be final. If Engineer approves any proposed substitute item, such approval will be set forth in an Addendum issued to all prospective Bidders. Bidders shall not rely upon approvals made in any other manner.

SC-6.06 Add a new paragraph immediately after Paragraph 6.06.G:

The Contractor shall not award work valued at more than fifty (50%) percent of the Contract Price to Subcontractor(s), without prior written approval of the Owner.

{If OWNER qualifies for sales or use tax exemptions, language similar to the following should be inserted here and coordinated with the language of Article 22 of the Instructions to Bidders.

SC-6.10. Add a new paragraph immediately after Paragraph 6.10.A:

B. Owner is exempt from payment of sales and compensating use taxes of the [State] and of cities and counties thereof on all materials to be incorporated into the Work.

1. Owner will furnish the required certificates of tax exemption to Contractor for use in the purchase of supplies and materials to be incorporated into the Work.

2. Owner's exemption does not apply to construction tools, machinery, equipment, or other property purchased by or leased by Contractor, or to supplies or materials not incorporated into the Work.

{SC-7.01.A. If the Owner is planning to have Work performed by more than one prime contractor, by Owner, or others, it should be specifically stated here.}

{When multiple prime contractors are working on a single Site, the following modification should be made.

SC-7.02.A.1. Delete paragraphs 7.02.A.1-3 in their entirety and insert the following:

1. The _____ Contractor shall have the authority and be responsible for coordination of the activities among the other prime contractors and subcontractors on the Site to ensure a safe, efficient working environment. This authority covers scheduling delivery of materials, storage of materials, sequencing of construction involving different crafts, resolving interface issues between crafts, scheduling testing, and all other aspects of the Work that do not impact the design or function of the Work.

SC-9.03.A. Add the following language at the end of paragraph 9.03.A:

The Engineer will provide Resident Project Representative services for this project. The Duties, Responsibilities, and Limitations of Authority of the Resident Project Representative will be as stated in Exhibit D of the Agreement Between Owner and Engineer, E-500, 2008 Edition, as amended and executed for this specific Project. *{If anyone other than the Engineer is providing the Resident Project Representative, this language must be modified.}*

SC-14.02.A.3. Add the following language at the end of paragraph 14.02.A.3:

No payments will be made that would deplete the retainage, place in escrow any funds that are required for retainage, or invest the retainage for the benefit of the Contractor.

SC-14.02.A.4. Add the following new Paragraph after Paragraph 14.02.A.3:

The Application for Payment form to be used on this Project is EJCDC No. C-620. The Agency must approve all Applications for Payment before payment is made.

SC-14.02.C.1. Delete Paragraph 14.02.C.1 in its entirety and insert the following in its place:

1. The Application for Payment with Engineer's recommendations will be presented to the Owner and Agency for consideration. If both the Owner and Agency find the Application for Payment acceptable, the recommended amount less any reduction under the provisions of Paragraph 14.02.D will become due ten days after the Application for Payment is presented to the Owner, and the Owner will make payment to the Contractor.

{If the Project Owner is a Tribe, it is important to clarify that this agreement does not modify any relationships that the Tribe may have outside this Project, by adding this language.}

SC-17.07. Add the following new paragraph after Paragraph 17.06:

> Tribal Sovereignty. No provision of this Agreement will be construed by any of the signatories as abridging or debilitating any sovereign powers of the_____(insert name of Tribe)_____ (Tribe); affecting the trust-beneficiary relationship between the Secretary of the Interior, Tribe, and Indian landowner(s); or interfering with the government-to-government relationship between the United States and the Tribe.

SC-18 Add a new Article 18, "Federal Requirements," after Article 17.

SC-18.01 Add the following language at the beginning of Article 18 with the title "Agency Not a Party."

A. This Contract is expected to be funded in part with funds provided by Agency. Neither Agency, nor any of its departments, entities, or employees is a party to this Contract.

SC-18.02 Add the following language after Article 18.01.A with the title "Contract Approval."

A. Owner and Contractor will furnish Owner's attorney such evidence as required so that Owner's attorney can complete and execute the following "Certificate of Owner's Attorney" (Exhibit GC-A) before Owner submits the executed Contract Documents to Agency for approval.

B. Concurrence by Agency in the award of the Contract is required before the Contract is effective.

SC 18.03 Add the following language after Article 18.02.B with the title "Conflict of Interest."

A. Contractor may not knowingly contract with a supplier or manufacturer if the individual or entity who prepared the plans and specifications has a corporate or financial affiliation with the supplier or manufacturer. Owner's officers, employees, or agents shall not engage in the award or administration of this Contract if a conflict of interest, real or apparent, would be involved. Such a conflict would arise when: (i) the employee, officer or agent; (ii) any member of their immediate family; (iii) their partner or (iv) an organization that employs, or is about to employ, any of the above, has a financial interest in Contractor. Owner's officers, employees, or agents shall neither solicit nor accept gratuities, favors or anything of monetary value from Contractor or subcontractors.

SC-18.04 Add the following language after Article 18.03.A with the title "Gratuities."

A. If Owner finds after a notice and hearing that Contractor, or any of Contractor's agents or representatives, offered or gave gratuities (in the form of entertainment, gifts, or otherwise) to any official, employee, or agent of Owner or Agency in an attempt to secure this Contract or favorable treatment in awarding, amending, or making any determinations related to the performance of this Contract, Owner may, by written notice to Contractor, terminate this Contract. Owner may also pursue other rights and remedies that the law or this Contract provides. However, the existence of the facts on which Owner bases such findings shall be an issue and may be reviewed in proceedings under the dispute resolution provisions of this Contract.

B. In the event this Contract is terminated as provided in paragraph 18.04.A, Owner may pursue the same remedies against Contractor as it could pursue in the event of a breach of this Contract by Contractor. As a penalty, in addition to any other damages to which it may be entitled by law, Owner may pursue exemplary damages in an amount (as determined by Owner) which shall not be less than three nor more than ten times the costs Contractor incurs in providing any such gratuities to any such officer or employee.

SC-18.05 Add the following language after Article 18.04.B with the title "Audit and Access to

Records."

A. Owner, Agency, the Comptroller General of the United States, or any of their duly authorized representatives, shall have access to any books, documents, papers, and records of the Engineer which are pertinent to the Agreement, for the purpose of making audits, examinations, excerpts, and transcriptions. Engineer shall maintain all required records for three years after final payment is made and all other pending matters are closed.

SC-18,06 Add the following language after Article 18.05.A with the title "Small, Minority and

Women's Businesses."

A. If Contractor intends to let any subcontracts for a portion of the work, Contractor shall take affirmative steps to assure that small, minority and women's businesses are used when possible as sources of supplies, equipment, construction, and services. Affirmative steps shall consist of: (1) including qualified small, minority and women's businesses on solicitation lists; (2) assuring that small, minority and women's businesses are solicited whenever they are potential sources; (3) dividing total requirements when economically feasible, into small tasks or quantities to permit maximum participation of small, minority, and women's businesses; (4) establishing delivery schedules, where the requirements of the work permit, which will encourage participation by small, minority and women's businesses; (5) using the services and assistance of the Small Business Administration and the Minority Business Development Agency of the U.S. Department of Commerce; (6) requiring each party to a subcontract to take the affirmative steps of this section; and (7) Contractor is encouraged to procure goods and services from labor surplus area firms. SC-

18.07 Add the following after Article 18.06.A with the title "Anti-Kickback."

A. Contractor shall comply with the Copeland Anti-Kickback Act (18 USC 874 and 40 USC 276c) as supplemented by Department of Labor regulations (29 CFR Part 3, "Contractors and Subcontractors on Public Buildings or Public Works Financed in Whole or in Part by Loans or Grants of the United States"). The Act provides that Contractor or subcontractor shall be prohibited from inducing, by any means, any person employed in the construction, completion, or repair of public facilities, to give up any part of the compensation to which they are otherwise entitled. Owner shall report all suspected or reported violations to Agency.

SC-18.08 Add the following after Article 18.07.A with the title "Clean Air and Pollution Control Acts."

A. If this Contract exceeds $100,000, Compliance with all applicable standards, orders, or requirements issued under section 306 of the Clean Air Act (42 U.S.C. 1857(h) and 42 USC 7401et. seq.), section 508 of the Clean Water Act (33 U.S.C. 1368) and Federal Water Pollution Control Act (33 USC 1251 et seq.), Executive Order 11738, and Environmental Protection Agency regulations (40 CFR part 15) is required. Contractor will report violations to the Agency and the Regional Office of the EPA.

SC-18.09 Add the following after Article 18.08 with the title "State Energy Policy."

A. Contractor shall comply with the Energy Policy and Conservation Act (P.L. 94-163). Mandatory standards and policies relating to energy efficiency, contained in any applicable State Energy Conservation Plan, shall be utilized.

SC-18.10 Add the following after Article 18.09 with the title "Equal Opportunity Requirements."

A. If this Contract exceeds $10,000, Contractor shall comply with Executive Order 11246, "Equal Employment Opportunity," as amended by Executive Order 11375, "Amending Executive Order 11246 Relating to Equal Employment Opportunity," and as supplemented by regulations at 41 CFR part 60, "Office of Federal Contract Compliance Programs, Equal Employment Opportunity, Department of Labor."

B. Contractor's compliance with Executive Order 11246 shall be based on its implementation of the Equal Opportunity Clause, specific affirmative active obligations required by the Standard Federal Equal Employment Opportunity Construction Contract Specifications, as set forth in 41 CFR Part 60-4 and its efforts to meet the goals established for the geographical area where the Contract is to be performed. The hours of minority and female employment and training must be substantially uniform throughout the length of the Contract, and in each trade, and Contractor shall make a good faith effort to employ minorities and women evenly on each of its projects. The transfer of minority or female employees or trainees from Contractor to Contractor or from project to project for the sole purpose of meeting Contractor's goals shall be a violation of the Contract, the Executive Order, and the regulations in 41 CFR Part 60-4. Compliance with the goals will be measured against the total work hours performed.

C. Contractor shall provide written notification to the Director of the Office of Federal Contract Compliance Programs within 10 working days of award of any construction subcontract in excess of $10,000 at any tier for construction work under the Contract resulting from this solicitation. The notification shall list the name, address, and telephone number of the subcontractor; employer identification number; estimated dollar amount of subcontract; estimated starting and completion dates of the subcontract; and the geographical area in which the Contract is to be performed.

SC-18.11 Add the following after Article 18.10.C with the title "Restrictions on Lobbying."

A. Contractor and each subcontractor shall comply with Restrictions on Lobbying (Public Law 101-121, Section 319) as supplemented by applicable Agency regulations. This Law applies to the recipients of contracts and subcontracts that exceed $100,000 at any tier under a Federal loan that exceeds $150,000 or a Federal grant that exceeds $100,000. If applicable, Contractor must complete a certification form on lobbying activities related to a specific Federal loan or grant that is a funding source for this Contract. Each tier certifies to the tier above that it will not and has not used Federal appropriated funds to pay any person or organization for influencing or attempting to influence an officer or

employee of any agency, a member of Congress, or an employee of a member of Congress in connection with obtaining any Federal contract, grant, or any other award covered by 31 USC 1352. Each tier shall disclose any lobbying with non-Federal funds that takes place in connection with obtaining any Federal award. Certifications and disclosures are forwarded from tier to tier up to the Owner. Necessary certification and disclosure forms shall be provided by Owner.

SC-18.12 Add the following after Article 18.11.A with the title "Environmental Requirements."

When constructing a project involving trenching and/or other related earth excavations, Contractor shall comply with the following environmental constraints:

A. Wetlands – When disposing of excess, spoil, or other construction materials on public or private property, Contractor shall not fill in or otherwise convert wetlands.

B. Floodplains – When disposing of excess, spoil, or other construction materials on public or private property, Contractor shall not fill in or otherwise convert 100 year floodplain areas delineated on the latest Federal Emergency Management Agency Floodplain Maps, or other appropriate maps, i.e., alluvial soils on NRCS Soil Survey Maps.

C. Historic Preservation – Any excavation by Contractor that uncovers an historical or archaeological artifact shall be immediately reported to Owner and a representative of Agency. Construction shall be temporarily halted pending the notification process and further directions issued by Agency after consultation with the State Historic Preservation Officer (SHPO).

D. Endangered Species – Contractor shall comply with the Endangered Species Act, which provides for the protection of endangered and/or threatened species and critical habitat. Should any evidence of the presence of endangered and/or threatened species or their critical habitat be brought to the attention of Contractor, Contractor will immediately report this evidence to Owner and a representative of Agency. Construction shall be temporarily halted pending the notification process and further directions issued by Agency after consultation with the U.S. Fish and Wildlife Service.

E. Mitigation Measures – If the project had an Environmental Report, Environmental Assessment, or Environmental Impact Statement to meet the requirements of the National Environmental Policy Act, compliance with the mitigation measures, if any, in that document are hereby included as a condition of this contract. {These mitigation measures are as follows: Insert mitigation measures if any.}

EXHIBIT GC-A

Certificate of Owner's Attorney

I, the undersigned,_____, the duly authorized and acting legal representativ_____, do hereby certify as follows:

I have examined the attached Contract(s) and performance and payment bond(s) and the manner of execution thereof, and I am of the opinion that each of the aforesaid agreements is adequate and has been duly executed by the proper parties thereto acting through their duly authorized representatives; that said representatives have full power and authority to execute said agreements on behalf of the respective parties named thereon; and that the foregoing agreements constitute valid and legally binding obligations upon the parties executing the same in accordance with the terms, conditions, and provisions thereof.

_____

Date: _____

AGENCY CONCURRENCE

As lender or insurer of funds to defray the costs of this Contract, and without liability for any payments thereunder, the Agency hereby concurs in the form, content, and execution of this Agreement.

By:_____Date_____

Type Name:_____

EJCDC No. C-941 (2007 Edition)

Change Order
No. _____

Date of Issuance: Effective Date:

Project:	Owner:	Owner's Contract No.:
Contract:		Date of Contract:
Contractor:		Engineer's Project No.:

The Contract Documents are modified as follows upon execution of this Change Order:

Description:

Attachments (list documents supporting change):

CHANGE IN CONTRACT PRICE:

Original Contract Price:

$

[Increase] [Decrease] from previously approved Change Orders No. _____to No._____:

$_____

Contract Price prior to this Change Order:

$_____

[Increase] [Decrease] of this Change Order:

$_____

Contract Price incorporating this Change Order:

$_____

CHANGE IN CONTRACT TIMES:

Original Contract Times:

☐ Working days ☐ Calendar days

Substantial completion (days or date): _____

Ready for final payment (days or date):

[Increase] [Decrease] from previously approved Change Orders No._____to No._____:

Substantial completion (days): _____

Ready for final payment (days): _____

Contract Times prior to this Change Order:

Substantial completion (days or date): _____

Ready for final payment (days or date): _____

[Increase] [Decrease] of this Change Order:

Substantial completion (days or date): _____

Ready for final payment (days or date): _____

Contract Times with all approved Change Orders:

Substantial completion (days or date): _____

Ready for final payment (days or date): _____

RECOMMENDED:	ACCEPTED:	ACCEPTED:
By:_	By:___	By: _____
	Owner (Authorized Signature)	Engineer (Authorized Signature)
Date:_____	Date:_____	Date: _____

Approved by Funding Agency (if applicable):

_____ Date: _____

For information only

Change Order
Instructions

A. GENERAL INFORMATION

This document was developed to provide a uniform format for handling contract changes that affect Contract Price or Contract Times. Changes that have been initiated by a Work Change Directive must be incorporated into a subsequent Change Order if they affect Price or Times.

Changes that affect Contract Price or Contract Times should be promptly covered by a Change Order. The practice of accumulating Change Orders to reduce the administrative burden may lead to unnecessary disputes.

If Milestones have been listed in the Agreement, any effect of a Change Order thereon should be addressed.

For supplemental instructions and minor changes not involving a change in the Contract Price or Contract Times, a Field Order should be used.

B. COMPLETING THE CHANGE ORDER FORM

Engineer normally initiates the form, including a description of the changes involved and attachments based upon documents and proposals submitted by Contractor, or requests from Owner, or both.

Once Engineer has completed and signed the form, all copies should be sent to Owner or Contractor for approval, depending on whether the Change Order is a true order to the Contractor or the formalization of a negotiated agreement for a previously performed change. After approval by one contracting party, all copies should be sent to the other party for approval. Engineer should make distribution of executed copies after approval by both parties.

If a change only applies to price or to times, cross out the part of the tabulation that does not apply.

EJCDC
ENGINEERS JOINT CONTRACT DOCUMENTS COMMITTEE

Contractor's Application for Payment No.

	Application Period:	Application Date:
To (Owner):	From (Contractor):	Via (Engineer):
Project:	Contract:	
Owner's Contract No.:	Contractor's Project No.:	Engineer's Project No.:

Application For Payment

Change Order Summary

Approved Change Orders

Number	Additions	Deductions
TOTALS		
NET CHANGE BY CHANGE ORDERS		

1. ORIGINAL CONTRACT PRICE..... $ _____

2. Net change by Change Orders..... $ _____

3. Current Contract Price (Line 1 ± 2)..... $ _____

4. TOTAL COMPLETED AND STORED TO DATE
(Column F on Progress Estimate)..... $ _____

5. RETAINAGE:

a. X ____Work Completed..... $ ____

b. X _____Stored Material..... $ _____

c. Total Retainage (Line 5a + Line 5b)..... $ _____

6. AMOUNT ELIGIBLE TO DATE (Line 4 - Line 5c)..... $ _____

7. LESS PREVIOUS PAYMENTS (Line 6 from prior Application)..... $ _____

8. AMOUNT DUE THIS APPLICATION..... $ _____

9. BALANCE TO FINISH, PLUS RETAINAGE
(Column G on Progress Estimate + Line 5 above)..... $ _____

Contractor's Certification

The undersigned Contractor certifies that to the best of its knowledge: (1) all previous progress payments received from Owner on account of Work done under the Contract have been applied on account to discharge Contractor's legitimate obligations incurred in connection with Work covered by prior Applications for Payment; (2) title of all Work, materials and equipment incorporated in said Work or otherwise listed in or covered by this Application for Payment will pass to Owner at time of payment free and clear of all Liens, security interests and encumbrances (except such as are covered by a Bond acceptable to Owner indemnifying Owner against any such Liens, security interest or encumbrances); and (3) all Work covered by this Application for Payment is in accordance with the Contract Documents and is not defective.

By: Date:

Payment of: $ _____
(Line 8 or other - attach explanation of the other amount)

is recommended by: _____ _____
(Engineer) (Date)

Payment of: $ _____
(Line 8 or other - attach explanation of the other amount)

is approved by: _____ _____
(Owner) (Date)

Approved by: _____ _____
Funding Agency (if applicable) (Date)

Progress Estimate - Lump Sum Work

Contractor's Application

For (Contract):	Application Number:
Application Period:	Application Date:

			Work Completed		E	F		G
A		B	C	D				
Specification Section No.	Description	Scheduled Value ($)	From Previous Application (C+D)	This Period	Materials Presently Stored (not in C or D)	Total Completed and Stored to Date (C + D + E)	% (F / B)	Balance to Finish (B - F)
	Totals							

Progress Estimate - Unit Price Work

Contractor's Application

For (Contract):							Application Number:			
Application Period:							Application Date:			
A				B	C	D	E	F		
Item		Bid Item Quantity	Unit Price	Bid Item Value ($)	Estimated Quantity Installed	Value of Work Installed to Date	Materials Presently Stored (not in C)	Total Completed and Stored to Date (D + E)	% (F / B)	Balance to Finish (B - F)
Bid Item No.	Description									

Stored Material Summary

Contractor's Application

For (Contract):								Application Number:			
Application Period:								Application Date:			
A		B	C		D		E		F		G
Bid Item No.	Supplier Invoice No.	Submittal No. (with Specification Section No.)	Storage Location	Description of Materials or Equpment Stored	Stored Previously		Amount Stored this Month ($)	Subtotal Amount Completed and Stored to Date (D + E)	Incorporated in Work		Materials Remaining in Storage ($) (D + E - F)
					Date Placed into Storage (Month/Year)	Amount ($)			Date (Month/ Year)	Amount ($)	

EJCDC
ENGINEERS JOINT CONTRACT DOCUMENTS COMMITTEE

PERFORMANCE BOND

CONTRACTOR *(name and address)*:

SURETY *(name and address of principal place of business)*:

OWNER *(name and address)*:

CONSTRUCTION CONTRACT
Effective Date of the Agreement:
Amount:
Description *(name and location)*:

BOND
Bond Number:
Date *(not earlier than the Effective Date of the Agreement of the Construction Contract)*:
Amount:
Modifications to this Bond Form: ☐ None ☐ See Paragraph 16

Surety and Contractor, intending to be legally bound hereby, subject to the terms set forth below, do each cause this Performance Bond to be duly executed by an authorized officer, agent, or representative.

CONTRACTOR AS PRINCIPAL	**SURETY**
_____ *(seal)*	_____ *(seal)*
Contractor's Name and Corporate Seal	Surety's Name and Corporate Seal
By: _____	**By:** _____
Signature	Signature *(attach power of attorney)*
_____	_____
Print Name	Print Name
_____	_____
Title	Title
Attest: _____	**Attest:** _____
Signature	Signature
_____	_____
Title	Title

Notes: (1) Provide supplemental execution by any additional parties, such as joint venturers. (2) Any singular reference to Contractor, Surety, Owner, or other party shall be considered plural where applicable.

1. The Contractor and Surety, jointly and severally, bind themselves, their heirs, executors, administrators, successors, and assigns to the Owner for the performance of the Construction Contract, which is incorporated herein by reference.

2. If the Contractor performs the Construction Contract, the Surety and the Contractor shall have no obligation under this Bond, except when applicable to participate in a conference as provided in Paragraph 3.

3. If there is no Owner Default under the Construction Contract, the Surety's obligation under this Bond shall arise after:

3.1 The Owner first provides notice to the Contractor and the Surety that the Owner is considering declaring a Contractor Default. Such notice shall indicate whether the Owner is requesting a conference among the Owner, Contractor, and Surety to discuss the Contractor's performance. If the Owner does not request a conference, the Surety may, within five (5) business days after receipt of the Owner's notice, request such a conference. If the Surety timely requests a conference, the Owner shall attend. Unless the Owner agrees otherwise, any conference requested under this Paragraph 3.1 shall be held within ten (10) business days of the Surety's receipt of the Owner's notice. If the Owner, the Contractor, and the Surety agree, the Contractor shall be allowed a reasonable time to perform the Construction Contract, but such an agreement shall not waive the Owner's right, if any, subsequently to declare a Contractor Default;

3.2 The Owner declares a Contractor Default, terminates the Construction Contract and notifies the Surety; and

3.3 The Owner has agreed to pay the Balance of the Contract Price in accordance with the terms of the Construction Contract to the Surety or to a contractor selected to perform the Construction Contract.

4. Failure on the part of the Owner to comply with the notice requirement in Paragraph 3.1 shall not constitute a failure to comply with a condition precedent to the Surety's obligations, or release the Surety from its obligations, except to the extent the Surety demonstrates actual prejudice.

5. When the Owner has satisfied the conditions of Paragraph 3, the Surety shall promptly and at the Surety's expense take one of the following actions:

5.1 Arrange for the Contractor, with the consent of the Owner, to perform and complete the Construction Contract;

5.2 Undertake to perform and complete the Construction Contract itself, through its agents or independent contractors;

5.3 Obtain bids or negotiated proposals from qualified contractors acceptable to the Owner for a contract for performance and completion of the Construction Contract, arrange for a contract to be prepared for execution by the Owner and a contractor selected with the Owners concurrence, to be secured with performance and payment bonds executed by a qualified surety equivalent to the bonds issued on the Construction Contract, and pay to the Owner the amount of damages as described in Paragraph 7 in excess of the Balance of the Contract Price incurred by the Owner as a result of the Contractor Default; or

5.4 Waive its right to perform and complete, arrange for completion, or obtain a new contractor, and with reasonable promptness under the circumstances:

5.4.1 After investigation, determine the amount for which it may be liable to the Owner and, as soon as practicable after the amount is determined, make payment to the Owner; or

5.4.2 Deny liability in whole or in part and notify the Owner, citing the reasons for denial.

6. If the Surety does not proceed as provided in Paragraph 5 with reasonable promptness, the Surety shall be deemed to be in default on this Bond seven days after receipt of an additional written notice from the Owner to the Surety demanding that the Surety perform its obligations under this Bond, and the Owner shall be entitled to enforce any remedy available to the Owner. If the Surety proceeds as provided in Paragraph 5.4, and the Owner refuses the payment or the Surety has denied liability, in whole or in part, without further notice the Owner shall be entitled to enforce any remedy available to the Owner.

7. If the Surety elects to act under Paragraph 5.1, 5.2, or 5.3, then the responsibilities of the Surety to the Owner shall not be greater than those of the Contractor under the Construction Contract, and the responsibilities of the Owner to the Surety shall not be greater than those of the Owner under the Construction Contract. Subject to the commitment by the Owner to pay the Balance of the Contract Price, the Surety is obligated, without duplication for:

7.1 the responsibilities of the Contractor for correction of defective work and completion of the Construction Contract;

7.2 additional legal, design professional, and delay costs resulting from the Contractor's Default, and resulting from the actions or failure to act of the Surety under Paragraph 5; and

7.3 liquidated damages, or if no liquidated damages are specified in the Construction Contract, actual damages caused by delayed performance or non-performance of the Contractor.

8. If the Surety elects to act under Paragraph 5.1, 5.3, or 5.4, the Surety's liability is limited to the amount of this Bond.

9. The Surety shall not be liable to the Owner or others for obligations of the Contractor that are unrelated to the Construction Contract, and the Balance of the Contract Price shall not be reduced or set off on account of any such unrelated obligations. No right of action shall accrue on this Bond to any person or entity other than the Owner or its heirs, executors, administrators, successors, and assigns.

10. The Surety hereby waives notice of any change, including changes of time, to the Construction Contract or to related subcontracts, purchase orders, and other obligations.

11. Any proceeding, legal or equitable, under this Bond may be instituted in any court of competent jurisdiction in the location in

which the work or part of the work is located and shall be instituted within two years after a declaration of Contractor Default or within two years after the Contractor ceased working or within two years after the Surety refuses or fails to perform its obligations under this Bond, whichever occurs first. If the provisions of this paragraph are void or prohibited by law, the minimum periods of limitations available to sureties as a defense in the jurisdiction of the suit shall be applicable.

12. Notice to the Surety, the Owner, or the Contractor shall be mailed or delivered to the address shown on the page on which their signature appears.

13. When this Bond has been furnished to comply with a statutory or other legal requirement in the location where the construction was to be performed, any provision in this Bond conflicting with said statutory or legal requirement shall be deemed deleted herefrom and provisions conforming to such statutory or other legal requirement shall be deemed incorporated herein. When so furnished, the intent is that this Bond shall be construed as a statutory bond and not as a common law bond.

14. Definitions

14.1 alance of the Contract Price: The total amount payable by the Owner to the Contractor under the Construction Contract after all proper adjustments have been made including allowance for the Contractor for any amounts received or to be received by the Owner in settlement of insurance or other claims for damages to which the Contractor is entitled, reduced by all valid and proper payments made to or on behalf of the Contractor under the Construction Contract.

14.2 Construction Contract: The agreement between the Owner and Contractor identified on the cover page, including all Contract Documents and changes made to the agreement and the Contract Documents.

14.3 Contractor Default: Failure of the Contractor, which has not been remedied or waived, to perform or otherwise to comply with a material term of the Construction Contract.

14.4 Owner Default: Failure of the Owner, which has not been remedied or waived, to pay the Contractor as required under the Construction Contract or to perform and complete or comply with the other material terms of the Construction Contract.

14.5 Contract Documents: All the documents that comprise the agreement between the Owner and Contractor.

15. If this Bond is issued for an agreement between a contractor and subcontractor, the term Contractor in this Bond shall be deemed to be Subcontractor and the term Owner shall be deemed to be Contractor.

16. Modifications to this Bond are as follows:

EJCDC
ENGINEERS JOINT CONTRACT DOCUMENTS COMMITTEE

PAYMENT BOND

CONTRACTOR *(name and address)*:

SURETY *(name and address of principal place of business)*:

OWNER *(name and address)*:

CONSTRUCTION CONTRACT
Effective Date of the Agreement:
Amount:
Description *(name and location)*:

BOND
Bond Number:
Date *(not earlier than the Effective Date of the Agreement of the Construction Contract)*:
Amount:
Modifications to this Bond Form: ☐ None ☐ See Paragraph 18

Surety and Contractor, intending to be legally bound hereby, subject to the terms set forth below, do each cause this Payment Bond to be duly executed by an authorized officer, agent, or representative.

CONTRACTOR AS PRINCIPAL	**SURETY**
_____ *(seal)*	_____ *(seal)*
Contractor's Name and Corporate Seal	Surety's Name and Corporate Seal
By: _____	**By:** _____
Signature	Signature *(attach power of attorney)*
_____	_____
Print Name	Print Name
_____	_____
Title	Title
Attest: _____	**Attest:** _____
Signature	Signature
_____	_____
Title	Title

Notes: (1) Provide supplemental execution by any additional parties, such as joint venturers. (2) Any singular reference to Contractor, Surety, Owner, or other party shall be considered plural where applicable.

1. The Contractor and Surety, jointly and severally, bind themselves, their heirs, executors, administrators, successors, and assigns to the Owner to pay for labor, materials, and equipment furnished for use in the performance of the Construction Contract, which is incorporated herein by reference, subject to the following terms.

2. If the Contractor promptly makes payment of all sums due to Claimants, and defends, indemnifies, and holds harmless the Owner from claims, demands, liens, or suits by any person or entity seeking payment for labor, materials, or equipment furnished for use in the performance of the Construction Contract, then the Surety and the Contractor shall have no obligation under this Bond.

3. If there is no Owner Default under the Construction Contract, the Surety's obligation to the Owner under this Bond shall arise after the Owner has promptly notified the Contractor and the Surety (at the address described in Paragraph 13) of claims, demands, liens, or suits against the Owner or the Owner's property by any person or entity seeking payment for labor, materials, or equipment furnished for use in the performance of the Construction Contract, and tendered defense of such claims, demands, liens, or suits to the Contractor and the Surety.

4. When the Owner has satisfied the conditions in Paragraph 3, the Surety shall promptly and at the Surety's expense defend, indemnify, and hold harmless the Owner against a duly tendered claim, demand, lien, or suit.

5. The Surety's obligations to a Claimant under this Bond shall arise after the following:

    5.1 Claimants who do not have a direct contract with the Contractor,

        5.1.1 have furnished a written notice of non-payment to the Contractor, stating with substantial accuracy the amount claimed and the name of the party to whom the materials were, or equipment was, furnished or supplied or for whom the labor was done or performed, within ninety (90) days after having last performed labor or last furnished materials or equipment included in the Claim; and

        5.1.2 have sent a Claim to the Surety (at the address described in Paragraph 13).

    5.2 Claimants who are employed by or have a direct contract with the Contractor have sent a Claim to the Surety (at the address described in Paragraph 13).

6. If a notice of non-payment required by Paragraph 5.1.1 is given by the Owner to the Contractor, that is sufficient to satisfy a Claimant's obligation to furnish a written notice of non-payment under Paragraph 5.1.1.

7. When a Claimant has satisfied the conditions of Paragraph 5.1 or 5.2, whichever is applicable, the Surety shall promptly and at the Surety's expense take the following actions:

    7.1 Send an answer to the Claimant, with a copy to the Owner, within sixty (60) days after receipt of the Claim, stating the amounts that are undisputed and the basis for challenging any amounts that are disputed; and

    7.2 Pay or arrange for payment of any undisputed amounts.

    7.3 The Surety's failure to discharge its obligations under Paragraph 7.1 or 7.2 shall not be deemed to constitute a waiver of defenses the Surety or Contractor may have or acquire as to a Claim, except as to undisputed amounts for which the Surety and Claimant have reached agreement. If, however, the Surety fails to discharge its obligations under Paragraph 7.1 or 7.2, the Surety shall indemnify the Claimant for the reasonable attorney's fees the Claimant incurs thereafter to recover any sums found to be due and owing to the Claimant.

8. The Surety's total obligation shall not exceed the amount of this Bond, plus the amount of reasonable attorney's fees provided under Paragraph 7.3, and the amount of this Bond shall be credited for any payments made in good faith by the Surety.

9. Amounts owed by the Owner to the Contractor under the Construction Contract shall be used for the performance of the Construction Contract and to satisfy claims, if any, under any construction performance bond. By the Contractor furnishing and the Owner accepting this Bond, they agree that all funds earned by the Contractor in the performance of the Construction Contract are dedicated to satisfy obligations of the Contractor and Surety under this Bond, subject to the Owner's priority to use the funds for the completion of the work.

10. The Surety shall not be liable to the Owner, Claimants, or others for obligations of the Contractor that are unrelated to the Construction Contract. The Owner shall not be liable for the payment of any costs or expenses of any Claimant under this Bond, and shall have under this Bond no obligation to make payments to or give notice on behalf of Claimants, or otherwise have any obligations to Claimants under this Bond.

11. The Surety hereby waives notice of any change, including changes of time, to the Construction Contract or to related subcontracts, purchase orders, and other obligations.

12. No suit or action shall be commenced by a Claimant under this Bond other than in a court of competent jurisdiction in the state in which the project that is the subject of the Construction Contract is located or after the expiration of one year from the date (1) on which the Claimant sent a Claim to the Surety pursuant to Paragraph 5.1.2 or 5.2, or (2) on which the last labor or service was performed by anyone or the last materials or equipment were furnished by anyone under the Construction Contract, whichever of (1) or (2) first occurs. If the provisions of this paragraph are void or prohibited by law, the minimum period of limitation available to sureties as a defense in the jurisdiction of the suit shall be applicable.

13. Notice and Claims to the Surety, the Owner, or the Contractor shall be mailed or delivered to the address shown on the page on which their signature appears. Actual receipt of notice or Claims, however accomplished, shall be sufficient compliance as of the date received.

14. When this Bond has been furnished to comply with a statutory or other legal requirement in the location where the construction was to be performed, any provision in this Bond conflicting with said statutory or legal requirement shall be deemed deleted herefrom and provisions conforming to such statutory or other legal requirement shall be deemed incorporated herein. When so furnished, the intent is that this Bond shall be construed as a statutory bond and not as a common law bond.

15. Upon requests by any person or entity appearing to be a potential beneficiary of this Bond, the Contractor and Owner shall promptly furnish a copy of this Bond or shall permit a copy to be made.

16. **Definitions**

16.1 **Claim:** A written statement by the Claimant including at a minimum:

1. The name of the Claimant;
2. The name of the person for whom the labor was done, or materials or equipment furnished;
3. A copy of the agreement or purchase order pursuant to which labor, materials, or equipment was furnished for use in the performance of the Construction Contract;
4. A brief description of the labor, materials, or equipment furnished;
5. The date on which the Claimant last performed labor or last furnished materials or equipment for use in the performance of the Construction Contract;
6. The total amount earned by the Claimant for labor, materials, or equipment furnished as of the date of the Claim;
7. The total amount of previous payments received by the Claimant; and
8. The total amount due and unpaid to the Claimant for labor, materials, or equipment furnished as of the date of the Claim.

16.2 **Claimant:** An individual or entity having a direct contract with the Contractor or with a subcontractor of the Contractor to furnish labor, materials, or equipment for use in the performance of the Construction Contract. The term Claimant also includes any individual or entity that has rightfully asserted a claim under an applicable mechanic's lien or similar statute against the real property upon which the Project is located. The intent of this Bond shall be to include without limitation in the terms of "labor, materials, or equipment" that part of the water, gas, power, light, heat, oil, gasoline, telephone service, or rental equipment used in the Construction Contract, architectural and engineering services required for performance of the work of the Contractor and the Contractor's subcontractors, and all other items for which a mechanic's lien may be asserted in the jurisdiction where the labor, materials, or equipment were furnished.

16.3 **Construction Contract:** The agreement between the Owner and Contractor identified on the cover page, including all Contract Documents and all changes made to the agreement and the Contract Documents.

16.4 **Owner Default**: Failure of the Owner, which has not been remedied or waived, to pay the Contractor as required under the Construction Contract or to perform and complete or comply with the other material terms of the Construction Contract.

16.5 **Contract Documents:** All the documents that comprise the agreement between the Owner and Contractor.

17. If this Bond is issued for an agreement between a contractor and subcontractor, the term Contractor in this Bond shall be deemed to be Subcontractor and the term Owner shall be deemed to be Contractor.

18. Modifications to this Bond are as follows:

EJCDC No. C-510 (2007 Edition)

Notice of Award

Date: _____

Project:	
Owner:	Owner's Contract No.:
Contract:	Engineer's Project No.:
Bidder:	
Bidder's Address: *[send Notice of Award Certified Mail, Return Receipt Requested]*	

For information only.

You are notified that your Bid dated_____for the above Contract has been considered. You are the Successful Bidder and are awarded a Contract for _____

[Indicate total Work, alternates, or sections of Work awarded.]

The Contract Price of your Contract is_____Dollars ($_____).

[Insert appropriate data if unit prices are used. Change language for cost-plus contracts.]

_____copies of the proposed Contract Documents (except Drawings) accompany this Notice of Award.

_____sets of the Drawings will be delivered separately or otherwise made available to you immediately.

You must comply with the following conditions precedent within [15] days of the date you receive this Notice of Award.

1. Deliver to the Owner [_____] fully executed counterparts of the Contract Documents.
2. Deliver with the executed Contract Documents the Contract security [Bonds] as specified in the Instructions to Bidders (Article 20), General Conditions (Paragraph 5.01), and Supplementary Conditions (Paragraph SC-5.01).
3. Other conditions precedent:

_____

Failure to comply with these conditions within the time specified will entitle Owner to consider you in default, annul this Notice of Award, and declare your Bid security forfeited.

Within ten days after you comply with the above conditions, Owner will return to you one fully executed counterpart of the Contract Documents.

_____

Owner

By:_____

Authorized Signature

_____

Title

Copy to Engineer

EJCDC No. C-550 (2007 Edition)

Notice to Proceed

Date: _____

Project:	
Owner:	Owner's Contract No.:
Contract:	Engineer's Project No.:
Contractor:	
Contractor's Address: *[send Certified Mail, Return Receipt Requested]*	

You are notified that the Contract Times under the above Contract will commence to run on_____. On or before that date, you are to start performing your obligations under the Contract Documents. In accordance with Article 4 of the Agreement, the date of Substantial Completion is_____, and the date of readiness for final payment is_____[(or) the number of days to achieve Substantial Completion is_____, and the number of days to achieve readiness for final payment is_____].

Before you may start any Work at the Site, Paragraph 2.01.B of the General Conditions provides that you and Owner must each deliver to the other (with copies to Engineer and other identified additional insureds and loss payees) certificates of insurance which each is required to purchase and maintain in accordance with the Contract Documents.

Also, before you may start any Work at the Site, you must:

_____ *[add other requirements]*.

_____ _____

Owner

Given by:

_____ _____

Authorized Signature

_____

_____

Title

_____ _____

Date

Copy to Engineer

For information only.

ACCEPTANCE OF NOTICE

Receipt of the above NOTICE TO PROCEED is hereby acknowledged by _____ this time _____, _____.

By: _____
Title: _____

Employer Identification Number _____

For information only

EJCDC No. C-625 (2007 Edition)

Certificate of SubstantialCompletion

Project:	
Owner:	Owner's Contract No.:
Contract:	Engineer's Project No.:

This [tentative] [definitive] Certificate of Substantial Completion applies to:

I All Work under the Contract Documents: I The following specified portions of the Work:

Date of Substantial Completion

The Work to which this Certificate applies has been inspected by authorized representatives of Owner, Contractor, and Engineer, and found to be substantially complete. The Date of Substantial Completion of the Project or portion thereof designated above is hereby declared and is also the date of commencement of applicable warranties required by the Contract Documents, except as stated below.

A [tentative] [definitive] list of items to be completed or corrected is attached hereto. This list may not be all-inclusive, and the failure to include any items on such list does not alter the responsibility of the Contractor to complete all Work in accordance with the Contract Documents.

The responsibilities between Owner and Contractor for security, operation, safety, maintenance, heat, utilities, insurance and warranties shall be as provided in the Contract Documents except as amended as follows:

I Amended Responsibilities I Not Amended

Owner's Amended Responsibilities:

Contractor's Amended Responsibilities:

The following documents are attached to and made part of this Certificate:

This Certificate does not constitute an acceptance of Work not in accordance with the Contract Documents nor is it a release of Contractor's obligation to complete the Work in accordance with the Contract Documents.

Executed by Engineer Date

Accepted by Contractor Date

Accepted by Owner Date

For information only.

FORM RD 400-3 Nondiscrimination Poster

Notice to Contractors and Applicants
(Rev. 2-98)

UNITED STATES DEPARTMENT OF AGRICULTURE
FARMERS HOME ADMINISTRATION

Attached is a nondiscrimination poster. In accordance with the terms of your construction

contract with _____
(Name of Borrower or Recipient of Grant)

the poster is to be displayed in all employment offices, on bulletin boards and in other conspicuous places available to employees and applicants for employment. The poster must be displayed in the same manner by your subcontractors who are subject to the equal opportunity provisions of your contract, and you are required to furnish them with such posters. Additional copies of the posters may be obtained from this office.

Any reference to Federal Government contract or contractors in the standard forms or posters is to be interpreted to include any contract for construction work financed in whole or in part with a Farmers Home Administration direct or insured loan or grant.

"Subcontractors" as used herein means any subcontractor holding a subcontract which calls for supplies or services required for the performance of the prime contract except subcontracts which either (1) do not exceed 10,000 ($100,000 if for standard commercial supplies or raw materials) or (2) are below the second tier and do not call for construction work at the site of construction, including any temporary location or facility established by the subcontractor specifically to meet the demands of his subcontract.

The USDA official may conduct compliance reviews of contracts covered by Executive order 11246, as amended. You will be notified if such a review is scheduled.

_____ _____
Date *USDA Official*

_____
Name of Contractor

_____
Address of Contractor

RD 400-3 (Rev. 2-98)

U.S.GPO: 1998-655-007/61527

Equal Employment Opportunity is

THE LAW

Employers Holding Federal Contracts or Subcontracts

Applicants to and employees of companies with a Federal government contract or subcontract are protected under the following Federal authorities:

RACE, COLOR, RELIGION, SEX, NATIONAL ORIGIN

Executive Order 11246, as amended, prohibits job discrimination on the basis of race, color, religion, sex or national origin, and requires affirmative action to ensure equality of opportunity in all aspects of employment.

INDIVIDUALS WITH DISABILITIES

Section 503 of the Rehabilitation Act of 1973, as amended, prohibits job discrimination because of disability and requires affirmative action to employ and advance in employment qualified individuals with disabilities who, with reasonable accommodation, can perform the essential functions of a job.

Private Employment, State and Local Government, Educational Institutions

Applicants to and employees of most private employers, state and local governments, educational institutions, employment agencies and labor organizations are protected under the following Federal laws:

RACE, COLOR, RELIGION, SEX, NATIONAL ORIGIN

Title VII of the Civil Rights Act of 1964, as amended, prohibits discrimination in hiring, promotion, discharge, pay, fringe benefits, job training, classification, referral, and other aspects of employment, on the basis of race, color, religion, sex or national origin.

DISABILITY

The Americans with Disabilities Act of 1990, as amended, protects qualified applicants and employees with disabilities from discrimination in hiring, promotion, discharge, pay, job training, fringe benefits, classification, referral, and other aspects of employment on the basis of disability.

The law also requires that covered entities provide qualified applicants and employees with disabilities with reasonable accommodations that do not impose undue hardship.

Programs or Activities Receiving Federal Financial Assistance

RACE, COLOR, NATIONAL ORIGIN, SEX

In addition to the protection of Title VII of the Civil Rights Act of 1964, Title VI of the Civil Rights Act prohibits discrimination on the basis of race, color or national origin in programs or activities receiving Federal financial assistance. Employment discrimination is covered by Title VI if the primary objective of the financial assistance is provision of employment, or where employment discrimination causes; or may cause discrimination in providing services under such programs. Title IX of the Education Amendments of 1972 prohibits employment discrimination on the basis of sex in educational programs or activities that receive Federal assistance.

VIETNAM ERA AND SPECIAL DISABLED VETERANS

38 U.S.C. 4212 of the Vietnam Era Veterans Readjustment Assistance Act of 1974 prohibits job discrimination and requires affirmative action to employ and advance in employment qualified Vietnam era veterans and qualified special disabled veterans.

Any person who believes a contractor has violated its nondiscrimination or affirmative action obligations under the authorities above should contact immediately:

The Office of Federal Contract Compliance Programs (OFCCP), Employment Standards Administration, U.S. Department of Labor, 200 Constitution Avenue, N.W., Washington, D.C. 20210 or call (202) 693-0101, or an OFCCP regional or district office, listed in most telephone directories under U.S. Government, Department of Labor.

AGE

The Age Discrimination in Employment Act of 1967, as amended, protects applicants and employees 40 years of age or older from discrimination on the basis of age in hiring, promotion, discharge, compensation, terms, conditions or privileges of employment.

SEX (WAGES)

In addition to sex discrimination prohibited by Title VII of the Civil Rights Act of 1964, as amended (see above), the Equal Pay Act of 1963, as amended, prohibits sex discrimination in payment of wages to women and men performing substantially equal work in the same establishment.

Retaliation against a person who files a charge of discrimination, participates in an investigation, or opposes an unlawful employment practice is prohibited by all these Federal laws.

If you believe that you have been discriminated against under any laws, you should contact immediately:

The U.S. Equal Employment Opportunity Commission (EEOC), 1801 L. Street, N.W., Washington, D.C. 20507 or an EEOC field office by calling toll free (800) 669-4000. For individuals with hearing impairments, EEOC's toll free TDD number is (800) 669-4000.

INDIVIDUALS WITH DISABILITIES

Section 501, 504 and 505 of the Rehabilitation Act of 1973, as amended, prohibits employment discrimination on the basis of disabilities in any program or activity that receives Federal financial assistance. Discrimination is prohibited in all aspects of employment against disabled persons who, with reasonable accommodation, can perform the essential functions of a job.

If you believe you have been discriminated against in a program of any institution that receives Federal assistance, you should contact immediately the Federal agency providing such assistance.

*U.S. GOVERNMENT PRINTING OFFICE 1994-0-368-769

B.6 - SUPPLEMENTARY CONTENT FOR FEDERAL PROJECTS

This Chapter contains applicable information to projects whose Funding Agency is the Federal Emergency Management Agency, the Environmental Protection Agency, the Health Department, and/or the Rural Development.

Some applicable Federal laws and Regulations are the following:

1. Code of Federal Regulations, Title 41, Revised as of July 1, 1998, 41CFR60-4.1, TITLE 41--PUBLIC CONTRACTS AND PROPERTY MANAGEMENT , Chapter 60, Part 60-4--CONSTRUCTION CONTRACTORS--AFFIRMATIVE ACTION REQUIREMENTS--Table of Contents

2. Code of Federal Regulations, [Revised as of July 1, 1998, 29CFR5, TITLE 29--LABOR
PART 5--LABOR STANDARDS PROVISIONS APPLICABLE TO CONTRACTS COVERING FEDERALLY FINANCED AND ASSISTED CONSTRUCTION (ALSO LABOR STANDARDS PROVISIONS APPLICABLE TO NONCONSTRUCTION CONTRACTS SUBJECT TO THE CONTRACT WORK HOURS AND SAFETY STANDARDS ACT)

3. Section 1352 of Public Law 101-121, 31USC1352, TITLE 31--MONEY AND FINANCE,
SUBTITLE II--THE BUDGET PROCESS, CHAPTER 13—APPROPRIATIONS, SUBCHAPTER III--LIMITATIONS, EXCEPTIONS, AND PENALTIES

4. When the Funding Agency is the Health Department, the Federal Emergency Administration or the Environmental Protection Agency: 43 FR 44049, Sept. 27, 1978, as amended at 44 FR 37596, June 27, 1979; 44 FR 39340, July 5, 1979, Title 40, Volume 1, Parts 1 to 49, Revised as of July 1, 1997, 40CFR34, PART 34--NEW RESTRICTIONS ON LOBBYING

5. When the Funding Agency is the Health Department, the Federal Emergency Management Agency or the Environmental Protection Agency the following applies:
.MBE/WBE Fair Share. The recipient must ensure to the fullest extent possible that a minimum "Fair Share" goal of 8% of Federal funds for prime contracts or subcontracts for supplies, construction, equipment or services are made available to organizations owned or controlled by socially and economically disadvantaged individuals, women and historically black colleges and universities.

The recipient agrees to include in its bid documents at least an 8% negotiated "Fair Share" percentage and require all of its prime contractors to include in their bid documents for subcontracts at least an 8% "Fair Share" percentage.

6. Projects with funds from the Clean Air Act shall comply with - 40CFR35.936, 40CFR35.938, 40CFR35.939.

UNITED STATES ENVIRONMENTAL PROTECTION AGENCY
WASHINGTON, D.C. 20460

MAR 2 0 2014

OFFICE OF WATER

MEMORANDUM

SUBJECT: Implementation of American Iron and Steel provisions of P.L. 113-76, Consolidated Appropriations Act, 2014

FROM: For Andrew D. Sawyers, Director
Office of Wastewater Management (4201M)

Peter C. Grevatt, Director
Office of Ground Water and Drinking Water (4601M)

TO: Water Management Division Directors
Regions I - X

P.L. 113-76, Consolidated Appropriations Act, 2014 (Act), includes an "American Iron and Steel (AIS)" requirement in section 436 that requires Clean Water State Revolving Loan Fund (CWSRF) and Drinking Water State Revolving Loan Fund (DWSRF) assistance recipients to use iron and steel products that are produced in the United States for projects for the construction, alteration, maintenance, or repair of a public water system or treatment works if the project is funded through an assistance agreement executed beginning January 17, 2014 (enactment of the Act), through the end of Federal Fiscal Year 2014.

Section 436 also sets forth certain circumstances under which EPA may waive the AIS requirement. Furthermore, the Act specifically exempts projects where engineering plans and specifications were approved by a State agency prior to January 17, 2014.

The approach described below explains how EPA will implement the AIS requirement. The first section is in the form of questions and answers that address the types of projects that must comply with the AIS requirement, the types of products covered by the AIS requirement, and compliance. The second section is a step-by-step process for requesting waivers and the circumstances under which waivers may be granted.

Implementation

The Act states:

Sec. 436. (a)(1) None of the funds made available by a State water pollution control revolving fund as authorized by title VI of the Federal Water Pollution Control Act (33 U.S.C. 1381 et seq.) or made available by a drinking water treatment revolving loan fund as authorized by section 1452 of the Safe Drinking Water Act (42 U.S.C. 300j–12) shall be used for a project for the construction, alteration, maintenance, or repair of a public water system or treatment works unless all of the iron and steel products used in the project are produced in the United States.

(2) In this section, the term ''iron and steel products'' means the following products made primarily of iron or steel: lined or unlined pipes and fittings, manhole covers and other municipal castings, hydrants, tanks, flanges, pipe clamps and restraints, valves, structural steel, reinforced precast concrete, and construction materials.

(b) Subsection (a) shall not apply in any case or category of cases in which the Administrator of the Environmental Protection Agency (in this section referred to as the ''Administrator'') finds that—

(1) applying subsection (a) would be inconsistent with the public interest;

(2) iron and steel products are not produced in the United States in sufficient and reasonably available quantities and of a satisfactory quality; or

(3) inclusion of iron and steel products produced in the United States will increase the cost of the overall project by more than 25 percent.

(c) If the Administrator receives a request for a waiver under this section, the Administrator shall make available to the public on an informal basis a copy of the request and information available to the Administrator concerning the request, and shall allow for informal public input on the request for at least 15 days prior to making a finding based on the request. The Administrator shall make the request and accompanying information available by electronic means, including on the official public Internet Web site of the Environmental Protection Agency.

(d) This section shall be applied in a manner consistent with United States obligations under international agreements.

(e) The Administrator may retain up to 0.25 percent of the funds appropriated in this Act for the Clean and Drinking Water State Revolving Funds for carrying out

the provisions described in subsection (a)(1) for management and oversight of the requirements of this section.

(f) This section does not apply with respect to a project if a State agency approves the engineering plans and specifications for the project, in that agency's capacity to approve such plans and specifications prior to a project requesting bids, prior to the date of the enactment of this Act.

The following questions and answers provide guidance for implementing and complying with the AIS requirements:

Project Coverage

1) What classes of projects are covered by the AIS requirement?

All treatment works projects funded by a CWSRF assistance agreement, and all public water system projects funded by a DWSRF assistance agreement, from the date of enactment through the end of Federal Fiscal Year 2014, are covered. The AIS requirements apply to the entirety of the project, no matter when construction begins or ends. Additionally, the AIS requirements apply to all parts of the project, no matter the source of funding.

2) Does the AIS requirement apply to nonpoint source projects or national estuary projects?

No. Congress did not include an AIS requirement for nonpoint source and national estuary projects unless the project can also be classified as a 'treatment works' as defined by section 212 of the Clean Water Act.

3) Are any projects for the construction, alteration, maintenance, or repair of a public water system or treatment works excluded from the AIS requirement?

Any project, whether a treatment works project or a public water system project, for which engineering plans and specifications were approved by the responsible state agency prior to January 17, 2014, is excluded from the AIS requirements.

4) What if the project does not have approved engineering plans and specifications but has signed an assistance agreement with a CWSRF or DWSRF program prior to January 17, 2014?

The AIS requirements do not apply to any project for which an assistance agreement was signed prior to January 17, 2014.

5) What if the project does not have approved engineering plans and specifications, but bids were advertised prior to January 17, 2014 and an assistance agreement was signed after January 17, 2014?

If the project does not require approved engineering plans and specifications, the bid advertisement date will count in lieu of the approval date for purposes of the exemption in section 436(f).

6) What if the assistance agreement that was signed prior to January 17, 2014, only funded a part of the overall project, where the remainder of the project will be funded later with another SRF loan?

If the original assistance agreement funded any construction of the project, the date of the original assistance agreement counts for purposes of the exemption. If the original assistance agreement was only for planning and design, the date of that assistance agreement will count for purposes of the exemption only if there is a written commitment or expectation on the part of the assistance recipient to fund the remainder of the project with SRF funds.

7) What if the assistance agreement that was signed prior to January 17, 2014, funded the first phase of a multi-phase project, where the remaining phases will be funded by SRF assistance in the future?

In such a case, the phases of the project will be considered a single project if all construction necessary to complete the building or work, regardless of the number of contracts or assistance agreements involved, are closely related in purpose, time and place. However, there are many situations in which major construction activities are clearly undertaken in phases that are distinct in purpose, time, or place. In the case of distinct phases, projects with engineering plans and specifications approval or assistance agreements signed prior to January 17, 2014 would be excluded from AIS requirements while those approved/signed on January 17, 2014, or later would be covered by the AIS requirements.

8) What if a project has split funding from a non-SRF source?

Many States intend to fund projects with "split" funding, from the SRF program and from State or other programs. Based on the Act language in section 436, which requires that American iron and steel products be used in any project for the construction, alteration, maintenance, or repair of a public water system or treatment works receiving SRF funding between and including January 17, 2014 and September 30, 2014, any project that is funded in whole or in part with such funds must comply with the AIS requirement. A "project" consists of all construction necessary to complete the building or work regardless of the number of contracts or assistance agreements involved so long as all contracts and assistance agreements awarded are closely related in purpose, time and place. This precludes the intentional splitting of SRF projects into separate and smaller contracts or assistance agreements to avoid AIS coverage on some portion of a larger

project, particularly where the activities are integrally and proximately related to the whole. However, there are many situations in which major construction activities are clearly undertaken in separate phases that are distinct in purpose, time, or place, in which case, separate contracts or assistance agreement for SRF and State or other funding would carry separate requirements.

9) What about refinancing?

If a project began construction, financed from a non-SRF source, prior to January 17, 2014, but is refinanced through an SRF assistance agreement executed on or after January 17, 2014 and prior to October 1, 2014, AIS requirements will apply to all construction that occurs on or after January 17, 2014, through completion of construction, unless, as is likely, engineering plans and specifications were approved by a responsible state agency prior to January 17, 2014. There is no retroactive application of the AIS requirements where a refinancing occurs for a project that has completed construction prior to January 17, 2014.

10) Do the AIS requirements apply to any other EPA programs, besides the SRF program, such as the Tribal Set-aside grants or grants to the Territories and DC?

No, the AIS requirement only applies to funds made available by a State water pollution control revolving fund as authorized by title VI of the Federal Water Pollution Control Act (33 U.S.C. 1381 et seq.) or made available by a drinking water treatment revolving loan fund as authorized by section 1452 of the Safe Drinking Water Act (42 U.S.C. 300j–12)

Covered Iron and Steel Products

11) What is an iron or steel product?

For purposes of the CWSRF and DWSRF projects that must comply with the AIS requirement, an iron or steel product is one of the following made primarily of iron or steel that is permanently incorporated into the public water system or treatment works:

Lined or unlined pipes or fittings;
Manhole Covers;
Municipal Castings (defined in more detail below);
Hydrants;
Tanks;
Flanges;
Pipe clamps and restraints;
Valves;
Structural steel (defined in more detail below);
Reinforced precast concrete; and
Construction materials (defined in more detail below).

12) What does the term 'primarily iron or steel' mean?

'Primarily iron or steel' places constraints on the list of products above. For one of the listed products to be considered subject to the AIS requirements, it must be made of greater than 50% iron or steel, measured by cost. The cost should be based on the material costs.

13) Can you provide an example of how to perform a cost determination?

For example, the iron portion of a fire hydrant would likely be the bonnet, body and shoe, and the cost then would include the pouring and casting to create those components. The other material costs would include non-iron and steel internal workings of the fire hydrant (i.e., stem, coupling, valve, seals, etc). However, the assembly of the internal workings into the hydrant body would not be included in this cost calculation. If one of the listed products is not made primarily of iron or steel, United States (US) provenance is not required. An exception to this definition is reinforced precast concrete, which is addressed in a later question.

14) If a product is composed of more than 50% iron or steel, but is not listed in the above list of items, must the item be produced in the US? Alternatively, must the iron or steel in such a product be produced in the US?

The answer to both question is no. Only items on the above list must be produced in the US. Additionally, the iron or steel in a non-listed item can be sourced from outside the US.

15) What is the definition of steel?

Steel means an alloy that includes at least 50 percent iron, between .02 and 2 percent carbon, and may include other elements. Metallic elements such as chromium, nickel, molybdenum, manganese, and silicon may be added during the melting of steel for the purpose of enhancing properties such as corrosion resistance, hardness, or strength. The definition of steel covers carbon steel, alloy steel, stainless steel, tool steel and other specialty steels.

16) What does 'produced in the United States' mean?

Production in the United States of the iron or steel products used in the project requires that all manufacturing processes, including application of coatings, must take place in the United States, with the exception of metallurgical processes involving refinement of steel additives. All manufacturing processes includes processes such as melting, refining, forming, rolling, drawing, finishing, fabricating and coating. Further, if a domestic iron and steel product is taken out of the US for any part of the manufacturing process, it becomes foreign source material. However, raw materials such as iron ore, limestone and iron and steel scrap are not covered by the AIS requirement, and the

material(s), if any, being applied as a coating are similarly not covered. Non-iron or steel components of an iron and steel product may come from non-US sources. For example, for products such as valves and hydrants, the individual non-iron and steel components do not have to be of domestic origin.

17) Are the raw materials used in the production of iron or steel required to come from US sources?

No. Raw materials, such as iron ore, limestone, scrap iron, and scrap steel, can come from non-US sources.

18) If an above listed item is primarily made of iron or steel, but is only at the construction site temporarily, must such an item be produced in the US?

No. Only the above listed products made primarily of iron or steel, permanently incorporated into the project must be produced in the US. For example trench boxes, scaffolding or equipment, which are removed from the project site upon completion of the project, are not required to be made of U.S. Iron or Steel.

19) What is the definition of 'municipal castings'?

Municipal castings are cast iron or steel infrastructure products that are melted and cast. They typically provide access, protection, or housing for components incorporated into utility owned drinking water, storm water, wastewater, and surface infrastructure. They are typically made of grey or ductile iron, or steel. Examples of municipal castings are:

Access Hatches;
Ballast Screen;
Benches (Iron or Steel);
Bollards;
Cast Bases;
Cast Iron Hinged Hatches, Square and Rectangular;
Cast Iron Riser Rings;
Catch Basin Inlet;
Cleanout/Monument Boxes;
Construction Covers and Frames;
Curb and Corner Guards;
Curb Openings;
Detectable Warning Plates;
Downspout Shoes (Boot, Inlet);
Drainage Grates, Frames and Curb Inlets;
Inlets;
Junction Boxes;
Lampposts;
Manhole Covers, Rings and Frames, Risers;

Meter Boxes;
Service Boxes;
Steel Hinged Hatches, Square and Rectangular;
Steel Riser Rings;
Trash receptacles;
Tree Grates;
Tree Guards;
Trench Grates; and
Valve Boxes, Covers and Risers.

20) What is 'structural steel'?

Structural steel is rolled flanged shapes, having at least one dimension of their cross-section three inches or greater, which are used in the construction of bridges, buildings, ships, railroad rolling stock, and for numerous other constructional purposes. Such shapes are designated as wide-flange shapes, standard I-beams, channels, angles, tees and zees. Other shapes include H-piles, sheet piling, tie plates, cross ties, and those for other special purposes.

21) What is a 'construction material' for purposes of the AIS requirement?

Construction materials are those articles, materials, or supplies made primarily of iron and steel, that are permanently incorporated into the project, not including mechanical and/or electrical components, equipment and systems. Some of these products may overlap with what is also considered "structural steel". This includes, but is not limited to, the following products: wire rod, bar, angles, concrete reinforcing bar, wire, wire cloth, wire rope and cables, tubing, framing, joists, trusses, fasteners (i.e., nuts and bolts), welding rods, decking, grating, railings, stairs, access ramps, fire escapes, ladders, wall panels, dome structures, roofing, ductwork, surface drains, cable hanging systems, manhole steps, fencing and fence tubing, guardrails, doors, and stationary screens.

22) What is not considered a 'construction material' for purposes of the AIS requirement?

Mechanical and electrical components, equipment and systems are not considered construction materials. Mechanical equipment is typically that which has motorized parts and/or is powered by a motor. Electrical equipment is typically any machine powered by electricity and includes components that are part of the electrical distribution system.

The following examples (including their appurtenances necessary for their intended use and operation) are NOT considered construction materials: pumps, motors, gear reducers, drives (including variable frequency drives (VFDs)), electric/pneumatic/manual accessories used to operate valves (such as electric valve actuators), mixers, gates, motorized screens (such as traveling screens), blowers/aeration equipment, compressors, meters, sensors, controls and switches, supervisory control and

data acquisition (SCADA), membrane bioreactor systems, membrane filtration systems, filters, clarifiers and clarifier mechanisms, rakes, grinders, disinfection systems, presses (including belt presses), conveyors, cranes, HVAC (excluding ductwork), water heaters, heat exchangers, generators, cabinetry and housings (such as electrical boxes/enclosures), lighting fixtures, electrical conduit, emergency life systems, metal office furniture, shelving, laboratory equipment, analytical instrumentation, and dewatering equipment.

23) If the iron or steel is produced in the US, may other steps in the manufacturing process take place outside of the US, such as assembly?

No. Production in the US of the iron or steel used in a listed product requires that all manufacturing processes must take place in the United States, except metallurgical processes involving refinement of steel additives.

24) What processes must occur in the US to be compliant with the AIS requirement for reinforced precast concrete?

While reinforced precast concrete may not be at least 50% iron or steel, in this particular case, the reinforcing bar and wire must be produced in the US and meet the same standards as for any other iron or steel product. Additionally, the casting of the concrete product must take place in the US. The cement and other raw materials used in concrete production are not required to be of domestic origin.

If the reinforced concrete is cast at the construction site, the reinforcing bar and wire are considered to be a construction material and must be produced in the US.

Compliance

25) How should an assistance recipient document compliance with the AIS requirement?

In order to ensure compliance with the AIS requirement, specific AIS contract language must be included in each contract, starting with the assistance agreement, all the way down to the purchase agreements. Sample language for assistance agreements and contracts can be found in Appendix 3 and 4.

EPA recommends the use of a step certification process, similar to one used by the Federal Highway Administration. The step certification process is a method to ensure that producers adhere to the AIS requirement and assistance recipients can verify that products comply with the AIS requirement. The process also establishes accountability and better enables States to take enforcement actions against violators.

Step certification creates a paper trail which documents the location of the manufacturing process involved with the production of steel and iron materials. A step certification is a process under which each handler (supplier, fabricator, manufacturer,

processor, etc) of the iron and steel products certifies that their step in the process was domestically performed. Each time a step in the manufacturing process takes place, the manufacturer delivers its work along with a certification of its origin. A certification can be quite simple. Typically, it includes the name of the manufacturer, the location of the manufacturing facility where the product or process took place (not its headquarters), a description of the product or item being delivered, and a signature by a manufacturer's responsible party. Attached, as Appendix 5, are sample certifications. These certifications should be collected and maintained by assistance recipients.

Alternatively, the final manufacturer that delivers the iron or steel product to the worksite, vendor, or contractor, may provide a certification asserting that all manufacturing processes occurred in the US. While this type of certification may be acceptable, it may not provide the same degree of assurance. Additional documentation may be needed if the certification is lacking important information. Step certification is the best practice.

26) How should a State ensure assistance recipients are complying with the AIS requirement?

In order to ensure compliance with the AIS requirement, States SRF programs must include specific AIS contract language in the assistance agreement. Sample language for assistance agreements can be found in Appendix 3.

States should also, as a best practice, conduct site visits of projects during construction and review documentation demonstrating proof of compliance which the assistance recipient has gathered.

27) What happens if a State or EPA finds a non-compliant iron and/or steel product permanently incorporated in the project?

If a potentially non-compliant product is identified, the State should notify the assistance recipient of the apparent unauthorized use of the non-domestic component, including a proposed corrective action, and should be given the opportunity to reply. If unauthorized use is confirmed, the State can take one or more of the following actions: request a waiver where appropriate; require the removal of the non-domestic item; or withhold payment for all or part of the project. Only EPA can issue waivers to authorize the use of a non-domestic item. EPA may use remedies available to it under the Clean Water Act, the Safe Drinking Water Act, and 40 CFR part 31 grant regulations, in the event of a violation of a grant term and condition.

It is recommended that the State work collaboratively with EPA to determine the appropriate corrective action, especially in cases where the State is the one who identifies the item in noncompliance or there is a disagreement with the assistance recipient.

If fraud, waste, abuse, or any violation of the law is suspected, the Office of Inspector General (OIG) should be contacted immediately. The OIG can be reached at 1-

888-546-8740 or OIG_Hotline@epa.gov. More information can be found at this website: http://www.epa.gov/oig/hotline.htm.

28) How do international trade agreements affect the implementation of the AIS requirements?

The AIS provision applies in a manner consistent with United States obligations under international agreements. Typically, these obligations only apply to direct procurement by the entities that are signatories to such agreements. In general, SRF assistance recipients are not signatories to such agreements, so these agreements have no impact on this AIS provision. In the few instances where such an agreement applies to a municipality, that municipality is under the obligation to determine its applicability and requirements and document the actions taken to comply for the State.

Waiver Process

The statute permits EPA to issue waivers for a case or category of cases where EPA finds (1) that applying these requirements would be inconsistent with the public interest; (2) iron and steel products are not produced in the US in sufficient and reasonably available quantities and of a satisfactory quality; or (3) inclusion of iron and steel products produced in the US will increase the cost of the overall project by more than 25 percent.

In order to implement the AIS requirements, EPA has developed an approach to allow for effective and efficient implementation of the waiver process to allow projects to proceed in a timely manner. The framework described below will allow States, on behalf of the assistance recipients, to apply for waivers of the AIS requirement directly to EPA Headquarters. Only waiver requests received from states will be considered. Pursuant to the Act, EPA has the responsibility to make findings as to the issuance of waivers to the AIS requirements.

Definitions

The following terms are critical to the interpretation and implementation of the AIS requirements and apply to the process described in this memorandum:

Reasonably Available Quantity: The quantity of iron or steel products is available or will be available at the time needed and place needed, and in the proper form or specification as specified in the project plans and design.

Satisfactory Quality: The quality of iron or steel products, as specified in the project plans and designs.

Assistance Recipient: A borrower or grantee that receives funding from a State CWSRF or DWSRF program.

Step-By-Step Waiver Process

Application by Assistance Recipient

Each local entity that receives SRF water infrastructure financial assistance is required by section 436 of the Act to use American made iron and steel products in the construction of its project. However, the recipient may request a waiver. Until a waiver is granted by EPA, the AIS requirement stands, except as noted above with respect to municipalities covered by international agreements.

The waiver process begins with the SRF assistance recipient. In order to fulfill the AIS requirement, the assistance recipient must in good faith design the project (where applicable) and solicit bids for construction with American made iron and steel products. It is essential that the assistance recipient include the AIS terms in any request for proposals or solicitations for bids, and in all contracts (see Appendix 3 for sample construction contract language). The assistance recipient may receive a waiver at any point before, during, or after the bid process, if one or more of three conditions is met:

1. Applying the American Iron and Steel requirements of the Act would be inconsistent with the public interest;
2. Iron and steel products are not produced in the United States in sufficient and reasonably available quantities and of a satisfactory quality; or
3. Inclusion of iron and steel products produced in the United States will increase the cost of the overall project by more than 25 percent.

Proper and sufficient documentation must be provided by the assistance recipient. A checklist detailing the types of information required for a waiver to be processed is attached as Appendix 1.

Additionally, it is strongly encouraged that assistance recipients hold pre-bid conferences with potential bidders. A pre-bid conference can help to identify iron and steel products needed to complete the project as described in the plans and specifications that may not be available from domestic sources. It may also identify the need to seek a waiver prior to bid, and can help inform the recipient on compliance options.

In order to apply for a project waiver, the assistance recipient should email the request in the form of a Word document (.doc) to the State SRF program. It is strongly recommended that the State designate a single person for all AIS communications. The State SRF designee will review the application for the waiver and determine whether the necessary information has been included. Once the waiver application is complete, the State designee will forward the application to either of two email addresses. For CWSRF waiver requests, please send the application to: cwsrfwaiver@epa.gov. For DWSRF waiver requests, please send the application to: dwsrfwaiver@epa.gov.

Evaluation by EPA

After receiving an application for waiver of the AIS requirements, EPA Headquarters will publish the request on its website for 15 days and receive informal comment. EPA Headquarters will then use the checklist in Appendix 2 to determine whether the application properly and adequately documents and justifies the statutory basis cited for the waiver – that it is quantitatively and qualitatively sufficient – and to determine whether or not to grant the waiver.

In the event that EPA finds that adequate documentation and justification has been submitted, the Administrator may grant a waiver to the assistance recipient. EPA will notify the State designee that a waiver request has been approved or denied as soon as such a decision has been made. Granting such a waiver is a three-step process:

1. Posting – After receiving an application for a waiver, EPA is required to publish the application and all material submitted with the application on EPA's website for 15 days. During that period, the public will have the opportunity to review the request and provide informal comment to EPA. The website can be found at: http://water.epa.gov/grants_funding/aisrequirement.cfm

2. Evaluation – After receiving an application for waiver of the AIS requirements, EPA Headquarters will use the checklist in Appendix 2 to determine whether the application properly and adequately documents and justifies the statutory basis cited for the waiver – that it is quantitatively and qualitatively sufficient – and to determine whether or not to grant the waiver.

3. Signature of waiver approval by the Administrator or another agency official with delegated authority – As soon as the waiver is signed and dated, EPA will notify the State SRF program, and post the signed waiver on our website. The assistance recipient should keep a copy of the signed waiver in its project files.

Public Interest Waivers

EPA has the authority to issue public interest waivers. Evaluation of a public interest waiver request may be more complicated than that of other waiver requests so they may take more time than other waiver requests for a decision to be made. An example of a public interest waiver that might be issued could be for a community that has standardized on a particular type or manufacturer of a valve because of its performance to meet their specifications. Switching to an alternative valve may require staff to be trained on the new equipment and additional spare parts would need to be purchased and stocked, existing valves may need to be unnecessarily replaced, and portions of the system may need to be redesigned. Therefore, requiring the community to install an alternative valve would be inconsistent with public interest.

EPA also has the authority to issue a public interest waiver that covers categories of products that might apply to all projects.

EPA reserves the right to issue national waivers that may apply to particular classes of assistance recipients, particular classes of projects, or particular categories of iron or steel products. EPA may develop national or (US geographic) regional categorical waivers through the identification of similar circumstances in the detailed justifications presented to EPA in a waiver request or requests. EPA may issue a national waiver based on policy decisions regarding the public's interest or a determination that a particular item is not produced domestically in reasonably available quantities or of a sufficient quality. In such cases, EPA may determine it is necessary to issue a national waiver.

If you have any questions concerning the contents of this memorandum, you may contact us, or have your staff contact Jordan Dorfman, Attorney-Advisor, State Revolving Fund Branch, Municipal Support Division, at dorfman.jordan@epa.gov or (202) 564-0614 or Kiri Anderer, Environmental Engineer, Infrastructure Branch, Drinking Water Protection Division, at anderer.kirsten@epa.gov or (202) 564-3134.

Attachments

Appendix 1: Information Checklist for Waiver Request

The purpose of this checklist is to help ensure that all appropriate and necessary information is submitted to EPA. EPA recommends that States review this checklist carefully and provide all appropriate information to EPA. This checklist is for informational purposes only and does not need to be included as part of a waiver application.

Items	✓	Notes
General • Waiver request includes the following information: — Description of the foreign and domestic construction materials — Unit of measure — Quantity — Price — Time of delivery or availability — Location of the construction project — Name and address of the proposed supplier — A detailed justification for the use of foreign construction materials • Waiver request was submitted according to the instructions in the memorandum • Assistance recipient made a good faith effort to solicit bids for domestic iron and steel products, as demonstrated by language in requests for proposals, contracts, and communications with the prime contractor		
Cost Waiver Requests • Waiver request includes the following information: — Comparison of overall cost of project with domestic iron and steel products to overall cost of project with foreign iron and steel products — Relevant excerpts from the bid documents used by the contractors to complete the comparison — Supporting documentation indicating that the contractor made a reasonable survey of the market, such as a description of the process for identifying suppliers and a list of contacted suppliers		
Availability Waiver Requests • Waiver request includes the following supporting documentation necessary to demonstrate the availability, quantity, and/or quality of the materials for which the waiver is requested: — Supplier information or pricing information from a reasonable number of domestic suppliers indicating availability/delivery date for construction materials — Documentation of the assistance recipient's efforts to find available domestic sources, such as a description of the process for identifying suppliers and a list of contacted suppliers. — Project schedule — Relevant excerpts from project plans, specifications, and permits indicating the required quantity and quality of construction materials • Waiver request includes a statement from the prime contractor and/or supplier confirming the non-availability of the domestic construction materials for which the waiver is sought • Has the State received other waiver requests for the materials described in this waiver request, for comparable projects?		

Appendix 2: HQ Review Checklist for Waiver Request

Instructions: To be completed by EPA. Review all waiver requests using the questions in the checklist, and mark the appropriate box as Yes, No or N/A. Marks that fall inside the shaded boxes may be grounds for denying the waiver. If none of your review markings fall into a shaded box, the waiver is eligible for approval if it indicates that one or more of the following conditions applies to the domestic product for which the waiver is sought:

1. The iron and/or steel products are not produced in the United States in sufficient and reasonably available quantities and of a satisfactory quality.
2. The inclusion of iron and/or steel products produced in the United States will increase the cost of the overall project by more than 25 percent.

Review Items	Yes	No	N/A	Comments
Cost Waiver Requests • Does the waiver request include the following information? — Comparison of overall cost of project with domestic iron and steel products to overall cost of project with foreign iron and steel products				
— Relevant excerpts from the bid documents used by the contractors to complete the comparison				
— A sufficient number of bid documents or pricing information from domestic sources to constitute a reasonable survey of the market				
• Does the Total Domestic Project exceed the Total Foreign Project Cost by more than 25%?				
Availability Waiver Requests • Does the waiver request include supporting documentation sufficient to show the availability, quantity, and/or quality of the iron and/or steel product for which the waiver is requested? — Supplier information or other documentation indicating availability/delivery date for materials — Project schedule — Relevant excerpts from project plans, specifications, and permits indicating the required quantity and quality of materials				
• Does supporting documentation provide sufficient evidence that the contractors made a reasonable effort to locate domestic suppliers of materials, such as a description of the process for identifying suppliers and a list of contacted suppliers?				
• Based on the materials delivery/availability date indicated in the supporting documentation, will the materials be unavailable when they are needed according to the project schedule? (By item, list schedule date and domestic delivery quote date or other relevant information)				
• Is EPA aware of any other evidence indicating the non-availability of the materials for which the waiver is requested? Examples include: — Multiple waiver requests for the materials described in this waiver request, for comparable projects in the same State — Multiple waiver requests for the materials described in this waiver request, for comparable projects in other States — Correspondence with construction trade associations indicating the non-availability of the materials				
• Are the available domestic materials indicated in the bid documents of inadequate quality compared those required by the project plans, specifications, and/or permits?				

Appendix 3: Example Loan Agreement Language

ALL ASSISTANCE AGREEMENT MUST HAVE A CLAUSE REQUIRING COMPLIANCE WITH THE AIS REQUIREMENT. THIS IS AN EXAMPLE OF WHAT COULD BE INCLUDED IN SRF ASSISTANCE AGREEMENTS. EPA MAKES NO CLAIMS REGARDING THE LEGALITY OF THIS CLAUSE WITH RESPECT TO STATE LAW:

Comply with all federal requirements applicable to the Loan (including those imposed by the 2014 Appropriations Act and related SRF Policy Guidelines) which the Participant understands includes, among other, requirements that all of the iron and steel products used in the Project are to be produced in the United States ("American Iron and Steel Requirement") unless (i) the Participant has requested and obtained a waiver from the Agency pertaining to the Project or (ii) the Finance Authority has otherwise advised the Participant in writing that the American Iron and Steel Requirement is not applicable to the Project.

Comply with all record keeping and reporting requirements under the Clean Water Act/Safe Drinking Water Act, including any reports required by a Federal agency or the Finance Authority such as performance indicators of program deliverables, information on costs and project progress. The Participant understands that (i) each contract and subcontract related to the Project is subject to audit by appropriate federal and state entities and (ii) failure to comply with the Clean Water Act/Safe Drinking Water Act and this Agreement may be a default hereunder that results in a repayment of the Loan in advance of the maturity of the Bonds and/or other remedial actions.

Appendix 4: Sample Construction Contract Language

ALL CONTRACTS MUST HAVE A CLAUSE REQUIRING COMPLIANCE WITH THE AIS REQUIREMENT. THIS IS AN EXAMPLE OF WHAT COULD BE INCLUDED IN ALL CONTRACTS IN PROJECTS THAT USE SRF FUNDS. EPA MAKES NO CLAIMS REGARDING THE LEGALITY OF THIS CLAUSE WITH RESPECT TO STATE OR LOCAL LAW:

The Contractor acknowledges to and for the benefit of the City of _____ ("Purchaser") and the _____ (the "State") that it understands the goods and services under this Agreement are being funded with monies made available by the Clean Water State Revolving Fund and/or Drinking Water State Revolving Fund that have statutory requirements commonly known as "American Iron and Steel;" that requires all of the iron and steel products used in the project to be produced in the United States ("American Iron and Steel Requirement") including iron and steel products provided by the Contactor pursuant to this Agreement. The Contractor hereby represents and warrants to and for the benefit of the Purchaser and the State that (a) the Contractor has reviewed and understands the American Iron and Steel Requirement, (b) all of the iron and steel products used in the project will be and/or have been produced in the United States in a manner that complies with the American Iron and Steel Requirement, unless a waiver of the requirement is approved, and (c) the Contractor will provide any further verified information, certification or assurance of compliance with this paragraph, or information necessary to support a waiver of the American Iron and Steel Requirement, as may be requested by the Purchaser or the State. Notwithstanding any other provision of this Agreement, any failure to comply with this paragraph by the Contractor shall permit the Purchaser or State to recover as damages against the Contractor any loss, expense, or cost (including without limitation attorney's fees) incurred by the Purchaser or State resulting from any such failure (including without limitation any impairment or loss of funding, whether in whole or in part, from the State or any damages owed to the State by the Purchaser). While the Contractor has no direct contractual privity with the State, as a lender to the Purchaser for the funding of its project, the Purchaser and the Contractor agree that the State is a third-party beneficiary and neither this paragraph (nor any other provision of this Agreement necessary to give this paragraph force or effect) shall be amended or waived without the prior written consent of the State.

Appendix 5: Sample Certifications

The following information is provided as a sample letter of **step** certification for AIS compliance. Documentation must be provided on company letterhead.

Date

Company Name

Company Address

City, State Zip

Subject: American Iron and Steel Step Certification for Project (XXXXXXXXXX)

I, (company representative), certify that the (melting, bending, coating, galvanizing, cutting, etc.) process for (manufacturing or fabricating) the following products and/or materials shipped or provided for the subject project is in full compliance with the American Iron and Steel requirement as mandated in EPA's State Revolving Fund Programs.

Item, Products and/or Materials:

1. Xxxx
2. Xxxx
3. Xxxx

Such process took place at the following location:

_____

If any of the above compliance statements change while providing material to this project we will immediately notify the prime contractor and the engineer.

Signed by company representative

The following information is provided as a sample letter of certification for AIS compliance. Documentation must be provided on company letterhead.

Date

Company Name

Company Address

City, State Zip

Subject: American Iron and Steel Certification for Project (XXXXXXXXXX)

I, (company representative), certify that the following products and/or materials shipped/provided to the subject project are in full compliance with the American Iron and Steel requirement as mandated in EPA's State Revolving Fund Programs.

Item, Products and/or Materials:

1. Xxxx
2. Xxxx
3. Xxxx

Such process took place at the following location:

_____

If any of the above compliance statements change while providing material to this project we will immediately notify the prime contractor and the engineer.

Signed by company representative

UNITED STATES ENVIRONMENTAL PROTECTION AGENCY
WASHINGTON, D.C. 20460

OFFICE OF WATER

MAY 11 2018

MEMORANDUM

SUBJECT: Application of American Iron and Steel Requirements for Drinking Water State Revolving Fund Projects for Fiscal Year 2018

FROM: Anita Maria Thompkins, Director
Drinking Water Protection Division

TO: Water Division Directors
Regions I-X

On March 23, 2018, the President signed Public Law 115-141, the "Consolidated Appropriations Act, 2018" (hereinafter referred to as the Appropriation) which provides fiscal year 2018 appropriations for continuing projects and activities of the Federal Government through September 30, 2018. This law extends funding for the Drinking Water State Revolving Fund for the time period of March 23, 2018, through September 30, 2018, with the same conditions that were made applicable by the language of the FY 2017 appropriation, including the requirement for the use of American Iron and Steel products in projects receiving financial assistance from the DWSRF.

As you are aware, the Consolidated Appropriations Act, 2017 (P.L. 115-31), Consolidated Appropriations Act, 2016 (P.L. 114-113), the Consolidated and Further Continuing Appropriations Act, 2015 (P.L. 113-235) and the Consolidated Appropriations Act, 2014 (P.L. 113-76) included the "American Iron and Steel" requirement that recipients of DWSRF assistance are to use iron and steel products that are produced in the United States for projects for the construction, alteration, maintenance, or repair of a public water system.

All assistance agreements starting October 1, 2017, through September 30, 2018 must include the AIS requirement. In addition, all guidance issued since FY 2014 will also continue to be applicable until the AIS provision is no longer required. This memo will remain in place through September 30, 2018, and will continue in force under any continuing resolutions that use similar language as Section 424 of the "Consolidated Appropriations Act, 2018."

If you have any questions, please contact Kiri Anderer (202-564-3134 or anderer.kirsten@epa.gov).

Internet Address (URL) • http://www.epa.gov
Recycled/Recyclable • Printed with Vegetable Oil Based Inks on 100% Postconsumer, Process Chlorine Free Recycled Paper

cc: Ronald Bergman, Associate Division Director, Drinking Water Protection Division
Elizabeth Corr, Associate Division Director, Drinking Water Protection Division
Felecia Fort, Associate Chief, Infrastructure Branch
Kirsten Anderer, Environmental Engineer, Drinking Water State Revolving Fund
Jorge Medrano, Environmental Engineer, Drinking Water State Revolving Fund



Drinking Water State Revolving Fund

American Iron and Steel Requirement

2018 Annual Report Addendum



I. Overview of the American Iron and Steel (AIS) Requirement

A. History of the AIS Requirement

Congress first introduced a domestic procurement preference for the State Revolving Fund (SRF) programs under the American Recovery and Reinvestment Act (ARRA) of 2009, which provided the SRF programs an additional $6 billion in funding. ARRA included a "Buy American" provision that required Clean Water State Revolving Fund (CWSRF) and Drinking Water State Revolving Fund (DWSRF) assistance recipients of these ARRA funds to use domestic iron, steel, and manufactured goods.

In 2014, Congress introduced a new domestic procurement preference for the SRF programs under the Consolidated Appropriations Act (CAA) of 2014 (P.L. 113-76), which included the "American Iron and Steel (AIS)" requirement. The AIS requirement states that CWSRF and DWSRF assistance recipients must use iron and steel products that are produced in the United States for projects for the construction, alteration, maintenance, or repair of public water system or treatment works if the project is funded through an assistance agreement executed beginning January 17, 2014, through the end of Federal Fiscal Year (FFY) 2014. Since the enactment of the CAA of 2014, the AIS requirement has been included for DWSRF-funded projects in each subsequent appropriation bills. On October 23, 2018, the President signed the "America's Water Infrastructure Act of 2018" (AWIA). Section 2022 of AWIA amended Section 1452(a)(4)(A) of the Safe Drinking Water Act (SDWA) to extend the AIS requirement for projects receiving financial assistance from the DWSRF through FFY 2023. For details see the memorandum, Application of American Iron and Steel Requirements for Drinking Water State Revolving Fund Projects for Fiscal Years 2019 Through 2023. Exhibit 1 shows a timeline of the legal authorities of the AIS requirement for the DWSRF program through FFY 2018.

Exhibit 1: Timeline of AIS Legal Authority for the DWSRF Programs

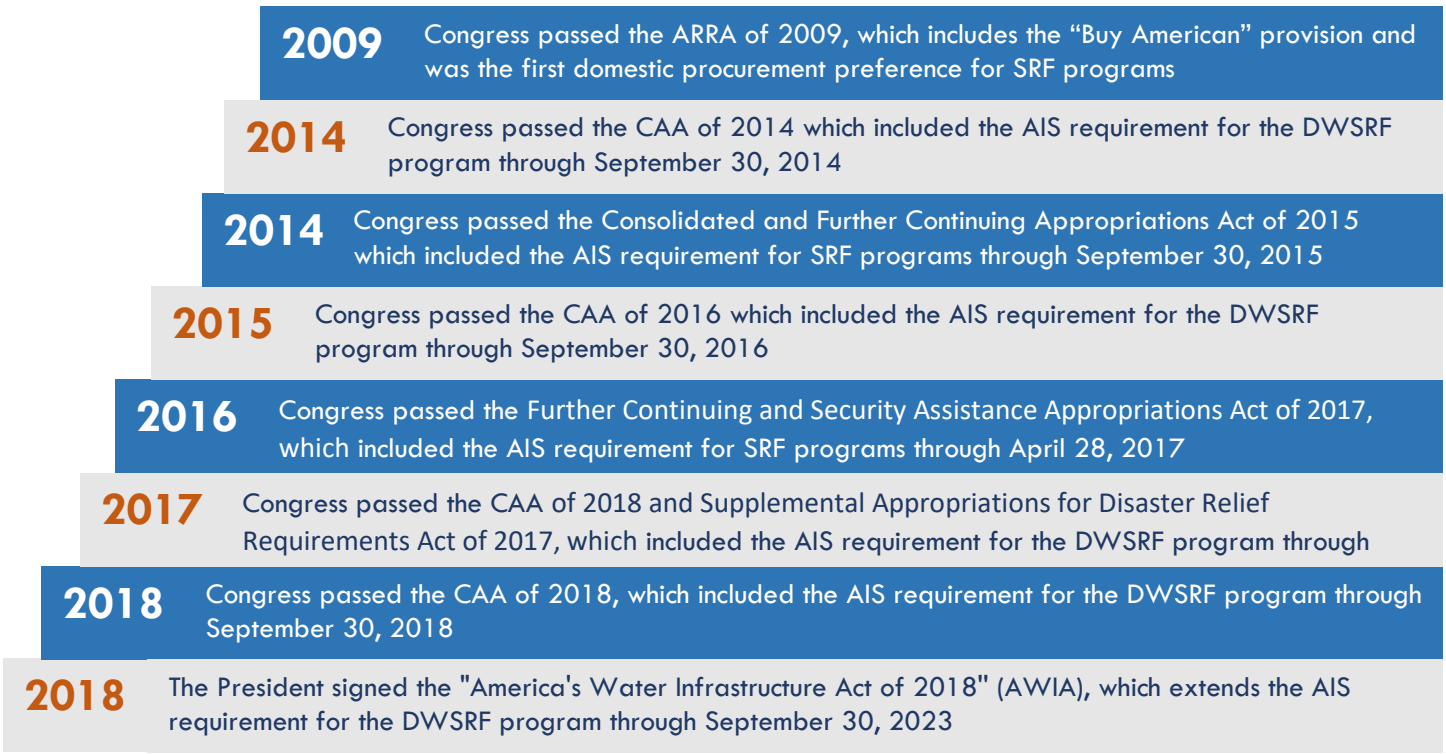

Iron and Steel Products Covered by the AIS Requirement

Under the AIS requirement, an iron or steel product is considered one of the following products that is made primarily of iron or steel and is permanently incorporated into the public water system or treatment works:

- Lined or unlined pipes or fittings;
- Manhole covers;
- Municipal castings;
- Hydrants;
- Tanks;
- Flanges;
- Pipe clamps and restraints;
- Valves;
- Structural steel;
- Reinforced precast concrete; and
- Construction materials.

Primarily Iron or Steel, Permanently Incorporated

Under the AIS requirement, a product is considered to be made primarily of iron and steel if it is made up of greater than 50% iron or steel, measured by material cost. For example, the iron portion of a fire hydrant would likely be the bonnet, body and shoe, and the cost then would include the pouring and casting to create those components. The other material costs would include non-iron and steel internal workings of the fire hydrant (i.e., stem, coupling, valve, seals, etc). The assembly of the internal workings into the hydrant body would not be included in this cost calculation. If one of the listed products is not made primarily of iron or steel, it does not need to be produced in the United States. However, if a product is listed above, made primarily of iron or steel and permanently incorporated into the project, then the product must be produced in the United States, or otherwise be covered by a waiver (discussed more in the Section II). For a product to be produced in the United States all manufacturing processes, excluding application of external coatings of components, must take place domestically the EPA has published an implementation memo and a series of question and answer documents that address the types of projects that must comply with the AIS requirement and the types of products covered by the AIS requirement.





Project Highlight: Roswell, NM

The EPA visited the Water Main Replacement Project for the City of Roswell, NM in February 2018. The city of Roswell received $4.8 million in DWSRF funding for the removal and replacement of portions of 36-inch and 48-inch diameter concrete cylinder water mains installed in the 1960s. Due to corrosive soil areas, the mains were leaking and failing as evidenced by numerous breaks in recent years. The city had previously spent $2 million in spot repairs. Ductile iron pipe was used for the 36-inch water main and fiberglass was used for the 48-inch water main. The City disqualified the two lowest bidders on the 36-inch main project because they were not using AIS-compliant pipe. However, the selected contractor on the 36-inch main project was the low bidder on the 48-inch main project. The 36-inch diameter water main was replaced in 2015. The 48-inch diameter water main replacement project started in April 2017 and is now complete.





Project Highlight: Gainesboro, TN

The EPA visited the Town of Gainesboro, TN water line and meter replacement project in February 2018. The project was broken into three contracts under a single $648 thousand DWSRF loan. The first contract was to replace service lines, the second to replace distribution lines, and the third to install meters. The meters include both zone meters to better track distribution water loss and radio read customer meters. The purpose of this project was to reduce leaks in the distribution system, which were leading to greater than 50 percent unaccounted-for water. At the time of the site visit, AIS product certifications and documentation were on file for all products incorporated into the project and the certifications were all letters from the manufacturer's representative. Also, the project engineer was tracking *de minimis* items in a clear and comprehensive manner. Following the criteria of the national waiver, the products were low cost and incidental items and were well under five percent of the material costs. Construction for this project began June 2017and is now complete.



II. Compliance with the AIS Requirement

A. First and Foremost, Buy Domestic

DWSRF assistance recipients should procure domestic iron and steel products to ensure compliance with the AIS requirement. A state or assistance recipient can contact the EPA if they are having difficulty locating a domestic product and the EPA can help with product research.

B. Certification Letters

Manufacturers should provide certification letters to verify that their iron or steel products comply with the AIS requirement. These certification letters also establish accountability and better enable assistance recipients to take enforcement actions against potential violators. A proper certification letter should assert that all manufacturing processes for purchased iron or steel products were domestically-performed. The EPA recommends these letters contain the following five key elements:

- **Products Delivered**- The letter should list the specific iron or steel product(s), including the quantity, delivered to the project site.
- **Location of Manufacturer**- The letter should include the city and state of the manufacturing facility where the product or process took place (not its headquarters), multiple locations are okay as long as all of them are in the U.S.
- **Reference to Specific Project**- The letter should include the name of the project or jurisdiction where the product was delivered.
- **Signature of Company Representative-** The letter should include a signature from a company representative on company letterhead.
- **Reference to the AIS requirement-** The letter should include a reference to the EPA's AIS requirement, especially if the letter also references other domestic preference laws (e.g. ARRA's Buy American requirement or the Buy America Act).

C. Waivers

The EPA has authority to waive the AIS requirement and to issue waivers for a case or category of cases where EPA finds (1) that applying these requirements would be inconsistent with the public interest; (2) iron and steel products are not produced in the U.S. in sufficient and reasonably available quantities and of a satisfactory quality; or (3) inclusion of iron and steel products produced in the US will increase the cost of the overall project by more than 25 percent. There are two main types of waivers: national and project-specific.

Rise in Domestic Manufacturing

The EPA has seen a steady rise in domestically produced iron and steel products since the inception of the AIS requirements in 2014. Manufacturers have constructed new foundries and continue to invest in their domestic manufacturing capabilities. As a result, products the EPA had previously approved waivers for due to lack of domestic availability are now being readily manufactured in the United States. The EPA will continue to promote domestic manufacturing through the AIS requirements.



National Waivers

National waivers are readily available for use by assistance recipients or manufacturers and, therefore, do not require any approval by the EPA prior to use. As of June 30, 2018, the EPA has issued the following five national waivers:

- **De Minimis Waiver**- a public interest waiver that allows SRF assistance recipients to use a small percentage of incidental iron and steel products of unknown or non-domestic origin in their projects. For more details see the memorandum, De Minimis Waiver Pursuant to Section 436 of P.L. 113-76, Consolidated Appropriations Act.
- **Plan and Specs Waiver**- a public interest waiver that allows assistance recipients to use non-domestic iron and steel products for eligible projects that had engineering plans and specifications approved by an appropriate state agency prior to and on April 2014. For more details see the memorandum, Plans and Specifications Waiver of Section 436 of P.L. 113-76, Consolidated Appropriations Act.
- **Minor components in Iron and Steel Products (with Cost Ceiling)-** an availability waiver that allows iron and steel product manufacturers to include a small percentage of non-domestic, minor components in otherwise AIS-compliant products. For more details see the memorandum, National Product Waiver for Minor Components in Iron and Steel Products (with Cost Ceiling).
- **Short-Term Product Waiver for Stainless Steel Nuts and Bolts Used in Pipe Couplings, Restraints, Joints, Flanges, and Saddles**- an availability waiver that allows iron and steel product manufacturers the use of non-domestic stainless-steel nuts and bolts in the specified products that are otherwise AIS-compliant. This waiver has been extended several times since originally approved in 2015. The final extension of this waiver is currently in place until February 24, 2020; upon expiration, the EPA has indicated the waiver will not be renewed. For more details see the memorandum, Final Extension of the Short-Term Product Waiver for Stainless Steel Nuts and Bolts Used in Pipe Couplings, Restraints, Joints Flanges, and Saddles.
- **Product Waiver for Pig Iron and Direct Reduced Iron** – an availability waiver that allows iron and steel product manufacturers to use non- domestic pig iron and direct reduced iron in otherwise AIS-compliant products. For more details see the memorandum, National Product Waiver for Pig Iron and Direct Reduced Iron.



Project-Specific Waivers

Project-specific waivers are for the use of a specified non-domestic product for a specific project. An assistance recipient may request this waiver from the EPA through their state SRF Program. Exhibit 2 shows the multi-step decision process of a project-specific waiver request. Waiver requests must be approved by the EPA before a non-domestic iron or steel product can be permanently incorporated into an SRF-funded project. Because these waiver requests are both project and product specific, any other assistance recipient that wishes to use a similar product must apply for a separate waiver based on specific project circumstances. As of June 30, 2018, the EPA approved 17 project-specific waivers for DWSRF projects, with 6 being approved in SFY 2018.

All approved and not approved project-specific waiver requests can be found on the EPA AIS website.

D. Noncompliance

A DWSRF assistance recipient is in noncompliance with the AIS requirement if a non-domestic iron or steel product, not covered by an EPA-issued waiver, is permanently incorporated into their project. If there is potential noncompliance, it is the responsibility of the state DWSRF program to work with the assistance recipient on corrective measures (i.e., requesting a project-specific waiver or replacing the product with a practicable domestic alternative). The EPA is available to assist the state SRF program with assessing appropriate enforcement action if the assistance recipient fails to complete the corrective measures.

Exhibit 2: Decision Process for Project-Specific Waiver Request

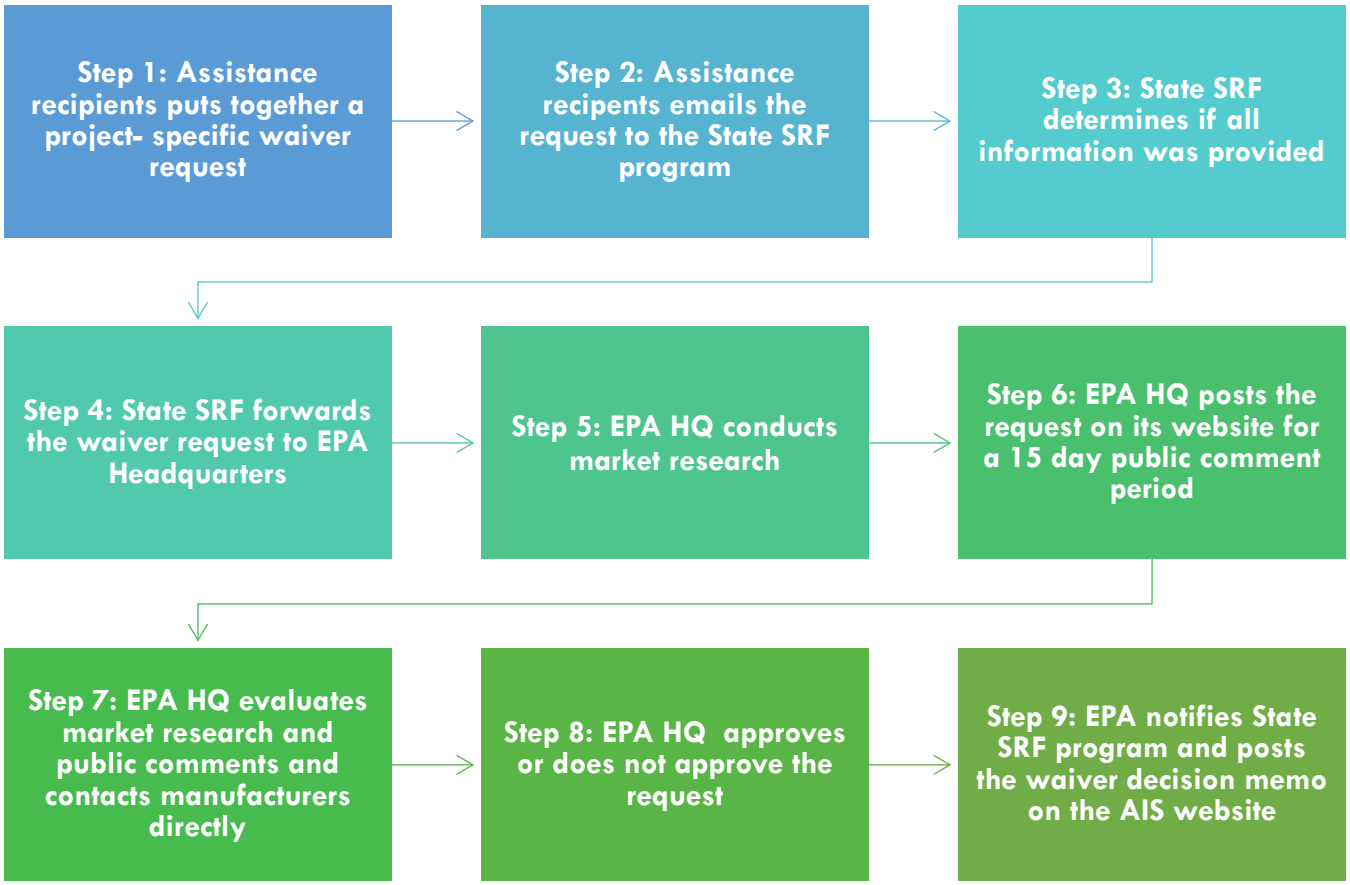

Project Highlight: Arkansas City, KS

The EPA visited the City of Arkansas City, KS Water Treatment Plant Project in April 2017. A $22 million assistance agreement for Arkansas City, one of the largest in Kansas at the time, included two projects: 1) Construction of a new 1.5 MG pre-stressed concrete finished water storage tank; and 2) Construction of a new 5.4 MGD reverse osmosis water treatment plant and associated site work, including mechanical, electrical, supervisory control and data acquisition (SCADA) and process systems.

The project includes a significant amount of iron and steel products. The City revised the design during the bid phase to accommodate the lack of a domestic alternative for one of the products needed. A bid addendum was issued to allow alternative materials for restrained joints. This change allowed the City to avoid having to request a product specific waiver to use a non-domestic product. The City was utilizing the national *de minimis* waiver and had a list of the items to-date that were covered by this waiver. At the time of the site visit the new storage tank was complete apart from testing and disinfection to put the tank into service. Construction of the new water treatment plant was underway and is now complete.





Project Highlight: Winnsboro, SC

The EPA visited the Broad River Raw Water Intake in the town of Winnsboro, SC in May 2018. The Town received $13 million in DWSRF funding to establish a new intake on the Broad River to serve the water treatment plant and includes a new intake and pump station, as well as, a transmission main to transport raw water to the treatment plant. Previously, the water treatment plant relied on a reservoir that was dependent on rainfall. During recent droughts, the reservoir proved inadequate requiring the Town to purchase water from other water systems at a significant cost. The design for the project was completed in Fall 2017 and construction began in December 2017. The project is now complete. The engineer collected the certification letters during the submittal process and will keep copies for at least 3 years, a best practice recommended by the EPA. The engineer will also provide the letters to the Town.



III. Oversight of the AIS Requirement

A. Project Site Visits

As a part of the EPA's oversight of the AIS requirements, the EPA conducts informal project site visits. These visits assess consistency of AIS implementation and initiate one-on-one discussions with assistance recipients to reiterate AIS requirements, conduct preliminary review of project AIS documentation and materials, and identify potential areas of non-compliance for projects to address prior to substantial completion. Following the site visit, the EPA provides the state SRF program and assistance recipient with observations and recommendations for improving AIS documentation.

Exhibit 3 highlights all of the projects that have been visited since the inception of the AIS requirement in January 2014. As of June 30, 2018, the EPA has conducted a total of 170 site visits at 46 of the 51 DWSRF programs, visiting 57 projects in 15 states during SFY18. These projects range in size, cost, and type. Of the projects visited in SFY18, the lowest total project cost was approximately $215,000 and the highest was $196 million; while the smallest population served was one hundred and the largest was one million.

Exhibit 3: Project Site Visit Map Since the Inception of the AIS Requirement (January 2014)

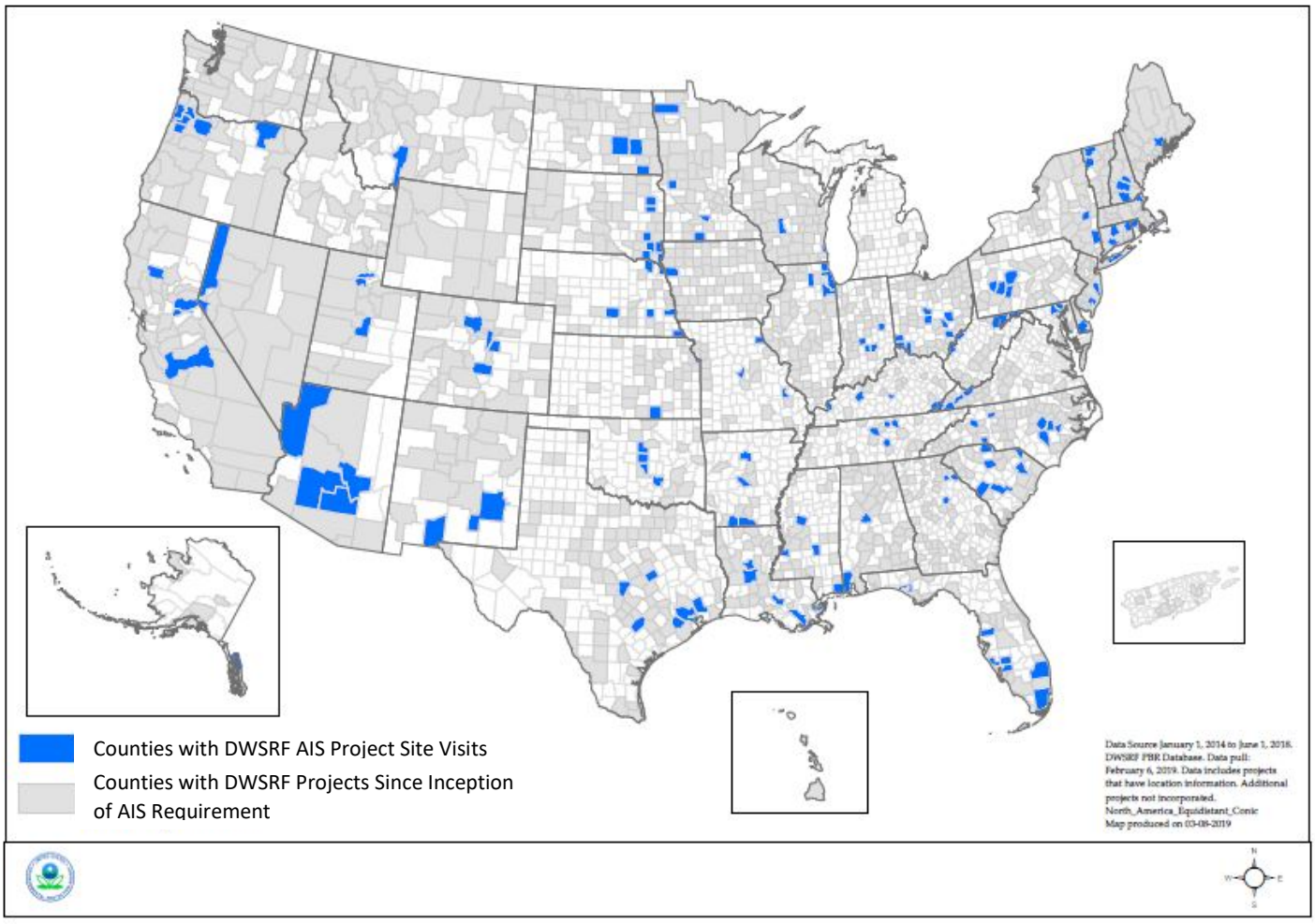

Common Observations

Generally, the EPA has observed domestic products being purchased and installed at DWSRF-funded project sites, and the visits continue to confirm that most products covered by the AIS requirements are readily available from domestic sources. Some common observations include inadequate or missing certification letters and unfamiliarity with or inappropriate use of national AIS waivers, especially the *de minimis* waiver.

B. Trainings

The EPA conducts trainings and outreach activities to engage various groups through in-depth discussions on AIS requirements and implementation. The trainings are attended by SRF assistance recipients, state SRF program staff, consulting engineers, general construction contractors, suppliers, and manufacturers. The EPA tailors the information presented based on the target audience. During SFY18, the EPA participated in 12 training and outreach events, including manufacturer meetings, state trainings, and national conference presentations. The EPA offers these trainings on an ongoing basis upon request.

Looking to the Future

Since 2014, the EPA has provided billions of dollars to states under the Drinking Water State Revolving Fund program for drinking water infrastructure system upgrades in thousands of communities across the United States. With the successful implementation of the AIS requirements to date, an overwhelming majority of these DWSRF projects have installed domestic products, thus protecting American manufacturing jobs, creating local construction jobs, and protecting public health. The EPA will continue to promote domestic manufacturing and conduct robust oversight to ensure appropriate application of the AIS requirements.





For more information about the Drinking Water State Revolving Fund, please contact us at:

Drinking Water State Revolving Fund Program
U.S. Environmental Protection Agency
1201 Constitution Avenue, NW (Mail code 4606M)
Washington, DC 20460

Internet: www.epa.gov/drinkingwatersrf

EPA 816-R-19-009 July 2019