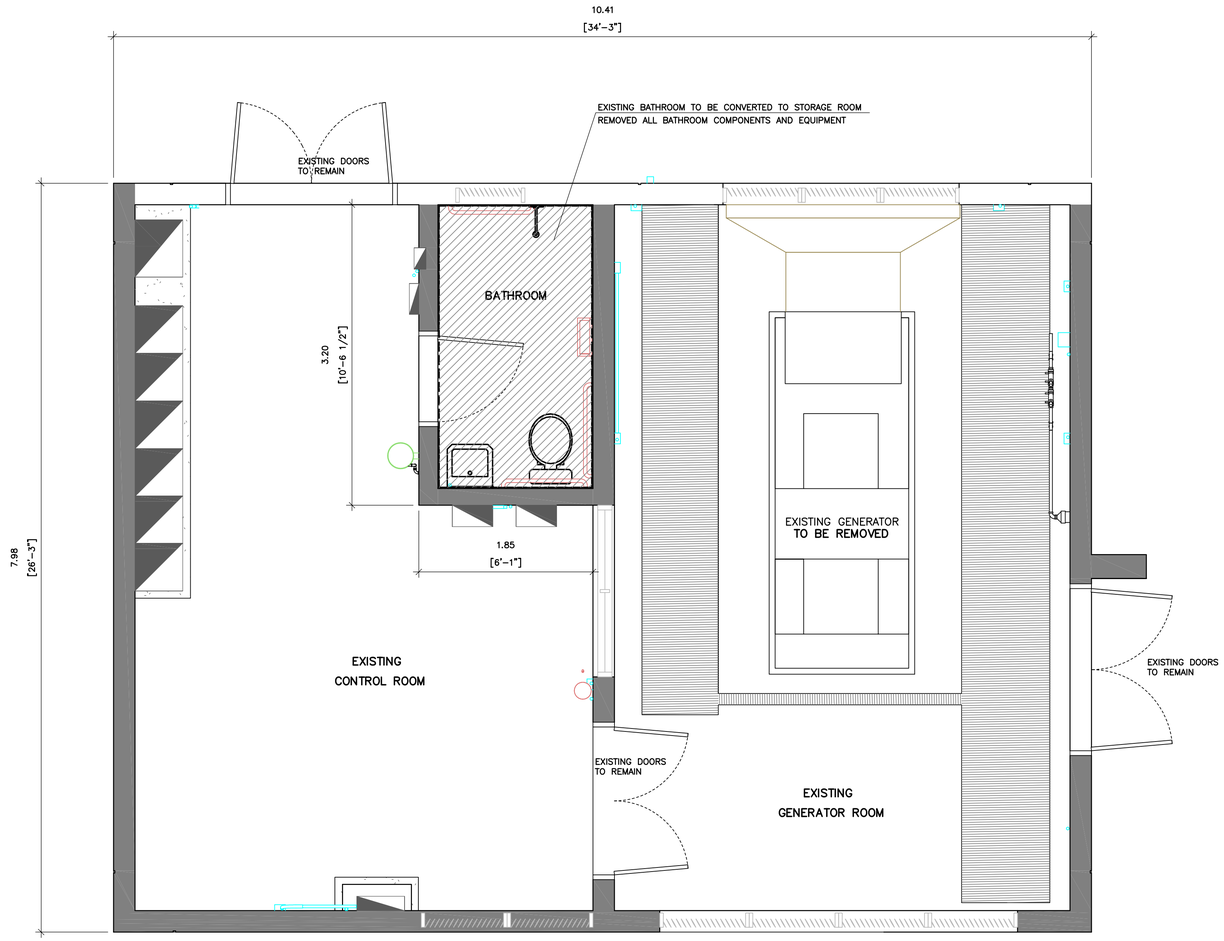

GENERATOR ROOM FLOOR PLAN
SCALE: 1:30

PROPOSED SCOPE OF WORK

EXISTING MCC ROOM BUILDING

1. REMOVED EXISTING BATHROOM FIXTURES AND CONVERT AREA FOR STORAGE USE.
2. PRESSURE CLEANING INSIDE AND OUTSIDE.
3. NEW PAINTING INSIDE, OUTSIDE AND ROOF SEALING.
4. REMOVED EXISTING GENERATOR AND COMPONENTS
5. EXISTING ELECTRIC PANEL TO REMAIN
6. EXISTING CONTROL PANEL TO REMAIN.
7. REMOVED EXISTING LIGHTING AND SWITCHES.

ELECTRICAL & ACCESSORIES

1. REPLACE DISCONNECT SWITCHES
2. NEW PRIME RATED DIESEL EMERGENCY GENERATOR UNIT TO BE LOCATED OUTSIDE THE CONTROL ROOM.
3. NEW AUTOMATIC TRANSFER SWITCH
4. DIESEL TANK DOUBLE WALL CONTAINMENT WITH A CAPACITY TO OPERATE CONTINUOUSLY FOR 24 HOURS, 7 DAYS. CONTROL SYSTEM WITH SCADA TO REPORT THE PUMPS, DIESEL STORAGE TANK, AND EGU STATUS REMOTELY. STANDARDS GIVEN BY PRASA'S DEPARTMENT.
5. REPLACE INTERIOR AND EXTERIOR LIGHTING LED.

COMMONWEALTH OF PUERTO RICO
DEPARTMENT OF NATURAL AND ENVIRONMENTAL RESOURCES
INFRASTRUCTURE PROJECTS DIVISION
THESE DOCUMENTS HAVE BEEN REVIEWED AND
APPROVED IN ACCORDANCE WITH THE REQUIREMENTS
OF THE CLEAN WATER STATE REVOLVING FUND PROGRAM

JAVIER VERARDI MATOS, PE
CHIEF

11/10/2026
DATE

30% DELIVERABLE

NO.	REMARKS	DATE	BY	APPV'D.

REVISIONS

AAF ENGINEERING, PSC
425 CARR 693 - PMB 269 - DORADO PR 00646

DESIGN-BUILD OF REHABILITATION OF WASTEWATER PUMP STATIONS-NORTH REGION (CWSRF-SAHFI)
TOA ALTA, PUERTO RICO
CIP NO. 2-00-9005

Autoridad de Acueductos y Alcantarillados
GOBIERNO DE PUERTO RICO

GOVERNMENT OF PUERTO RICO
AQUEDUCT AND SEWER AUTHORITY

SHEET TITLE: **TOA ALTA HEIGHTS PUMP STATION GENERATOR ROOM DEMOLITION PLAN**

DRAFT BY: AAF ENGINEERING, PSC	DATE	SEPT/2026
DESIGNED BY: AAF ENGINEERING, PSC	DATE	SEPT/2026
REVISED BY: A.A.F.T.	DATE	SEPT/2026
SUBMITTED BY: AAF ENGINEERING, PSC	DATE	SEPT/2026

SCALE: Het: 30
DRWG NO. TAH-PS-05
SHEET NO. 38 OF 74 SHEETS
–

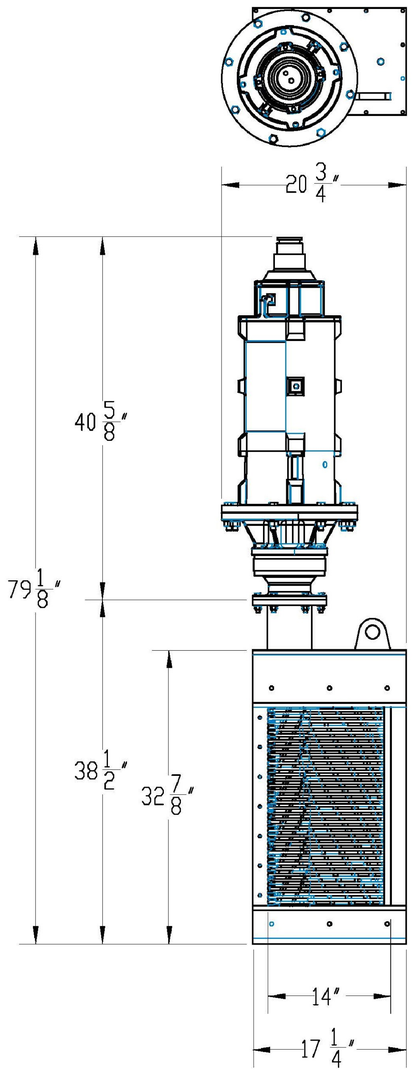

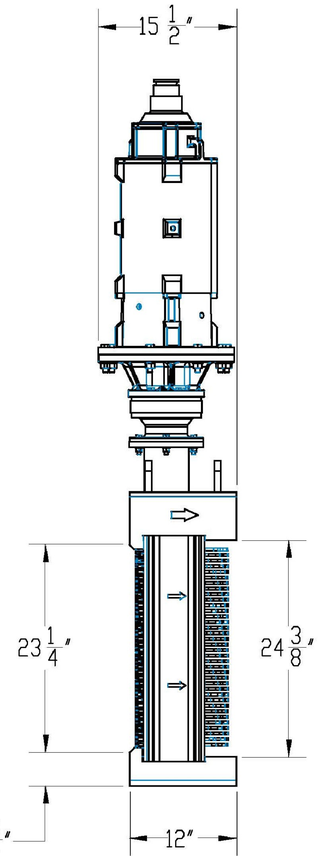

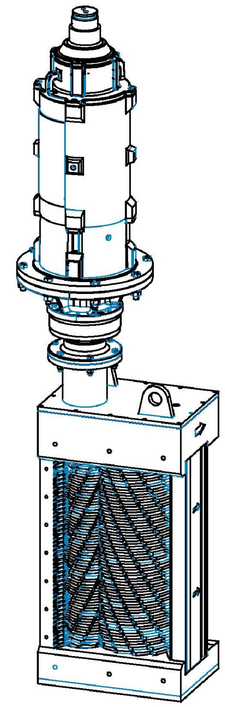

DRNA

COMMONWEALTH OF PUERTO RICO
DEPARTMENT OF NATURAL AND ENVIRONMENTAL RESOURCES
INFRASTRUCTURE PROJECTS DIVISION
THESE DOCUMENTS HAVE BEEN REVIEWED AND
APPROVED IN ACCORDANCE WITH THE REQUIREMENTS
OF THE CLEAN WATER STATE REVOLVING FUND PROGRAM

11/10/2026
JAVIER VERARDI MATOS, PE — DATE
CHIEF

COMMENTS

MODEL REF: CO-TM14024-006-Default

PROPRIETARY AND CONFIDENTIAL

THIS DRAWING EMBODIES A PROPRIETARY DESIGN ORIGINATED BY FRANKLIN MILLER, INC. ALL DESIGN, MANUFACTURING, REPRODUCTION (EXCEPT WHERE THE RECIPIENT HAS BEEN GIVEN THE EXPRESS RIGHT BY WRITTEN AGREEMENT TO REPRODUCE THE DRAWING) IS EXPRESSLY PROHIBITED. USE AND SALE RIGHTS REGARDING THE SAME ARE EXPRESSLY RESERVED. IT IS SUBMITTED UNDER A CONFIDENTIAL RELATIONSHIP FOR A SPECIFIC PURPOSE, AND THE RECIPIENT AGREES BY ACCEPTING THIS DRAWING NOT TO SUPPLY OR DISCLOSE ANY INFORMATION REGARDING IT TO ANY UNAUTHORIZED PERSON OR TO INCORPORATE IN OTHER PROJECTS ANY FEATURES PECULIAR TO THIS DESIGN. ALL RIGHTS HERETO ARE EXPRESSLY RESERVED FRANKLIN MILLER, INC. LIVINGSTON, NEW JERSEY

MACHINE TOLERANCES UNLESS OTHERWISE NOTED

DECIMALS		FRACTIONS	± 1/32
.0	± .015	ANGLES	± .05°
.00	± .010	CHAMFER ANGLES	± 3°
.000	± .005	SURFACE TEXTURE	

THIRD ANGLE PROJECTION

DO NOT SCALE DRAWING

	NAME	DATE
DRAWN	JB	8/17/2021
CHECKED		
ENG APPR.		
MFG APPR.		
Q.A.		
MATERIAL		
FINISH		

Franklin Miller®

Franklin Miller Inc.
60 Okner Parkway
Livingston, NJ 07039
Tel: 973-535-9200
www.franklinmiller.com

TITLE: TASKMASTER® TM14024 5Hp 60Hz Submersible

SIZE	DWG. NO.	REV
B	12261TM14024	0

SCALE: 1:15 | WEIGHT: | SHEET 1 OF 1

(24) GRINDING MACHINE EQUAL OR APPROVED EQUAL TO MODEL TM14024 5HP 60HZ SUBMERSIBLE FOR 1,300 GPM BY FRANKLIN MILLER
(SEE LOCATION ON DWG. NO. TAH-PS-04)

30% DELIVERABLE

NO.	REMARKS	DATE	BY	APPV'D.

REVISIONS

aaf
AAF ENGINEERING, PSC
425 CARR 693 - PMB 269 - DORADO PR 00646

DESIGN-BUILD OF REHABILITATION OF WASTEWATER PUMP STATIONS-NORTH REGION (CWSRF-SAHFI)
TOA ALTA, PUERTO RICO
CIP NO. 2-00-9005

Autoridad de Acueductos y Alcantarillados
GOBIERNO DE PUERTO RICO

GOVERNMENT OF PUERTO RICO
AQUEDUCT AND SEWER AUTHORITY

SHEET TITLE:
TOA ALTA HEIGHTS PUMP STATION GRINDER MACHINE DETAILS

DRAFT BY: AAF ENGINEERING, PSC	DATE: SEPT/2026	SCALE: H=1: 30
DESIGNED BY: AAF ENGINEERING, PSC	DATE: SEPT/2026	DRWG NO. TAH-PS-06
REVISED BY: A.A.F.T.	DATE: SEPT/2026	SHEET NO. 39 OF 74 SHEETS
SUBMITTED BY: AAF ENGINEERING, PSC	DATE: SEPT/2026	–

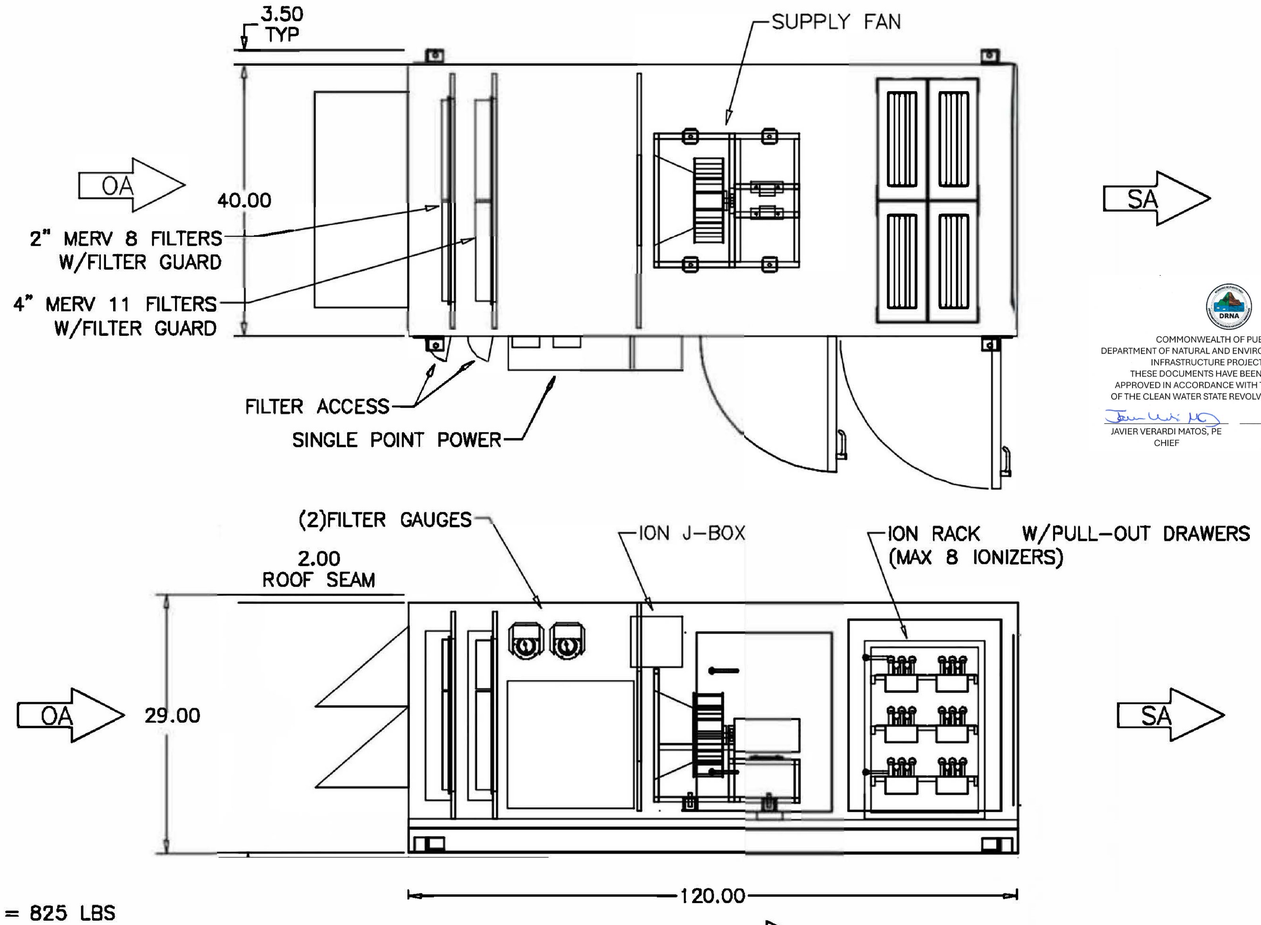

OPERATING WEIGHT = 825 LBS

DUE TO INDIVIDUAL COMPONENT TOLERANCES, ALL PLUMBING AND ELECTRICAL LOCATIONS ARE WITHIN 6.0" OF DRAWING LOCATION. DRAWING TO BE READ IN CONJUNCTION WITH UNIT DATA SHEET. ALL DIMENSIONS ARE IN INCHES.

air+	JOB NAME: WASTEWATER TREATMENT PLT	MODEL NO. 1,730 CFM				TAG NO. UNIT –
	CONTRACTOR:					DWG. NO. UNIT
	ENGINEER:	DATE				SHOP #
	DATE: 05/11/26 TJW.	INT.				JOB NO.

COMMONWEALTH OF PUERTO RICO
DEPARTMENT OF NATURAL AND ENVIRONMENTAL RESOURCES
INFRASTRUCTURE PROJECTS DIVISION
THESE DOCUMENTS HAVE BEEN REVIEWED AND
APPROVED IN ACCORDANCE WITH THE REQUIREMENTS
OF THE CLEAN WATER STATE REVOLVING FUND PROGRAM

11/10/2026
JAVIER VERARDI MATOS, PE — DATE
CHIEF

FOR ODOR CONTROL LOCATION SEE DWG. TAH-PS-01

30% DELIVERABLE

NO.	REMARKS	DATE	BY	APPV'D.

REVISIONS

AAF ENGINEERING, PSC
425 CARR 693 · PMB 269 · DORADO PR 00646

DESIGN-BUILD OF REHABILITATION OF WASTEWATER PUMP STATIONS-NORTH REGION (CWSRF-SAHFI)
TOA ALTA, PUERTO RICO
CIP NO. 2-00-9005

Autoridad de Acueductos y Alcantarillados
GOBIERNO DE PUERTO RICO

GOVERNMENT OF PUERTO RICO
AQUEDUCT AND SEWER AUTHORITY

SHEET TITLE: TOA ALTA HEIGHTS ODOR CONTROL SYSTEM

DRAFT BY: AAF ENGINEERING, PSC	DATE SEPT/2026	SCALE: NTS	
DESIGNED BY: AAF ENGINEERING, PSC	DATE SEPT/2026	DRWG NO. TAH-PS-07	
REVISED BY: A.A.F.T.	DATE SEPT/2026	SHEET NO. 40 OF 74 SHEETS	
SUBMITTED BY: AAF ENGINEERING, PSC	DATE SEPT/2026	–	

100 microns maximum sur toutes les portées de joint
100 microns maximum on all gaskets surfaces

Protection interieure :
- Grenaillage S.A. 2,5
- 1 couche epoxy , ép. 300 microns

Inside protection :
- Shot blasting S.A. 2,5
- 1 coat epoxy , th. 300 microns

Protection extérieure :
- Grenaillage S.A. 2,5
- Epoxy au zinc, ép. 80 microns
- Apprêt, ép. 120 microns
3 - Laque, ép. 50 microns RAL 1002 (jaune sable)
- Ep. totale 250 microns

Outside protection
- Shot blasting S.A. 2,5
- Zinc Rich epoxy, th. 80 microns
- High Built Epoxy, th. 120 microns
3 - Lacquer, th. 50 microns RAL 1002 (sand yellow)
- Totall th. 250 microns

Table des épaisseurs / Thickness table				
		Virole / Shell	Fond elliptique / Ellipsoidal head	
Corrosion intérieure Inside corrosion	ci	0,00 mm 0,000 in		
Epaisseur calculée Designed thickness	tr	11,07 mm 0,436 in	9,12 mm 0,359 in	2
Epaisseur résistante Resistant thickness		11,50 mm 0,453 in	10,20 mm 0,402 in	
	tr + ci	11,07 mm 0,436 in	9,12 mm 0,359 in	2
Epaisseur mini Fabrication Mini manufacture thickness	tmin	11,50 mm 0,453 in	10,20 mm 0,402 in	

Conditions d'etude / Design data		Reception : / Inspection :	LRQA
Code : ASME Boiler and Pressure Vessel Code Section VIII Division 1 2021 Edition		Poincon : / Stamp	ASME
Pression de service : / Max. Allowable Working Pressure	14,00 bar (203 psi)	Temperature de calcul : / Design temperature	40 °C (104 °F)
Pression maximale exterieure autorisee : / Max. Allowable External Working Pressure			Not Applicable
Temperature minimale d'etude du metal : / Min. Design Metal Temperature	0 °C (32 °F)	a : / at	10 0 bar (150 psi)
Pression d'epreuve hydraulique : / Hydrostatic testing pressure	215 bar (225 psi)		
Surepaisseur de corrosion : / Corrosion allowance	0 mm (0,00 inch)	suivant UG25 / according to UG25	
Coefficient de joint : / Joint Efficiency	Shell seam : 0.7 Head thickness :0.85		per UW-12(c) per UW-12(d)
Controle radio : / Radiographic Testing	None	Ressuage : / Penetrant Test	None
Traitement thermique apres soudage : / Post Weld Heat Treatment	None	Ultrasons : / Ultrasonic test	None
Fluide contenu : / Medium	Air, Eau Air, Water	Non corrosive service Non lethal service	
Volume : / Volume	5000 litres (177 cubic feet)	Poids a vide : / Empty weight	2003 kg (4416 lbs)

Observations	Remarks
- Casser les angles des bords interieurs - Arrondir les angles des fourrures	- *Exposed inside edges shall be chamfered or rounded* - *Edges of reinforcing plates shall be rounded*

Rep. Item	Qte Qty	Numero Number	Designation Description	Matiere Material	Observations Remarks
38	1	GCAQX000026	TRANS. PRESSION PSI 1/2"NPT 4-20mA HART PRESSURE TRANS. PSI 1/2"NPT 4-20mA HART	SUB-ASS	
37	1	GRAXX000041	RACCORD EXPRESS 1/2 NPT M EXPRESS FITTING M 1/2" NPT	BRASS	
36	1	GCRXI000004	CROIX 1/2" NPT CROSS 1/2" NPT	316L	
35	1	S920DM99019	SUPPORT MAGNETIQUE MANO D150 PRESSURE GAUGE SUPPORT	SUB-ASS	
34	4	S920DM99017	SUPPORT FLEXIBLE MAGNETIQUE MAGNETIC SUPPORT	SUB-ASS	
33	1	GCAQX001013	FLEXIBLE L3000MM 1 COUDE FLEXIBLE PIPE	STAINLESS STEEL	
32	1	S920DM99021	KIT ADAPTATEUR GONFLAGE NPT AIR INLET KIT	SUB-ASS	
31	1	GCOXX000017	COUDE MF 1/2 NPT ELBOW 1/2 NPT	STEEL	
30	1	GCAQX001034	FLEXIBLE L4000MM 1 COUDE FLEXIBLE PIPE	STAINLESS STEEL	
29	1	S920DM99023	KIT ADAPTATEUR ROSEMOUNT NPT LEVEL TRANSMITTEUR KIT	SUB-ASS	
28	3	GROXL000029	ROBIN.BOS MF 1/2" NPT PLUG VALVE 1/2 MF	BRASS	
27	5	GBOUB000013	BOUCHON M 1/2" NPT PLUG 1/2" NPT M	SA-105	
26	1	GCRXY000001	CROIX 1/2" NPT PN250 CROSS 1/2" NPT	A105	
25	1	GMAMY000003	MAMELON 1/2NPT MM 3000LBS NIPPLE 1/2NPT MM	A-105	
4 24	1	GBOUJI000004	BOUCHON M TH 1/2" NPT PLUG 1/2" NPT M	316L	
23	8	YEOHI160006	ECROU H M16 A4 INOX NUT H M16	CLASSE A4-80	/
22	4	VVHMI160706	VIS H M16X70 A4 INOX SCREW H M16X70	SA-193 BBM Cl.1	
4 21	4	VVHMI161006	VIS H M16X100 A4 INOX SCREW H M16X100	SA-193 BBM Cl.1	
20	16	VRMXI160006	RONDELLE M16 A4 INOX WASHER M16	316L	
19	1	GVBOI000005	VANNE A BRIDES DN50PN20 VALVE ND50 NP20	STAINLESS STEEL	
4 18	1	BDAPI005020	ANNEAU DE PURGE NPS2 CL150-600 FLUSHING RING NPS2 CL150-600	316L	1/2 NPT DRAIN
17	3	JPAXW005020	JOINT PLAT DN50 CL150 (PN20) GASKET 2" 150LBS ANSI B16.5	TESNIT BA-U	
16	1	GCAQW000220	TRANS. PRESSION PN20 A MEMBRANE AFFL. TRANSMITTER PN20	SUB-ASS	
15	16	VGOUI181106	GOUJON M18-80 bm30 STUD BOLT M18	SA-193 BBM CL2	/
14	1	A7810M000000	SORTIE EUV DN300/50 CL150 OUTLET	SUB-ASS	
1 13	1	BDAEP000015	BRIDE ANTI-EXTRUSION EUV DN400 GRATE DE450	ERTALON	
12	1	JTOXM000025	JOINT TORIQUE D1445X10 O RING id 445X10	NITRILE	
11	12	VVHWI1004065	VIS H.M10X40 INOX SCREW H M10X40	SA-193 BBM CL.2	
10	12	VRMXI1000006	RONDELLE M10 A4 INOX WASHER M10	316L	
9	1	AU001M10003	COUV DE234 EQUIPE MANCHON COVER ASSEMBLY	SUB-ASS	
8	1	DXXXP000007	COLLERETTE DE CREPINE PLAST. MOUNTING FLANGE	PLASTIC	
7	1	SU006M15000	VESSIE EAUX USEES 5000L D1500 BLADDER WASTE WATER 5000L D1500	BUTYL	
6	46	VEOHI1800065	ECROU H.M18 INOX NUT H.M18	SA-194 8M	/
5	46	VRMXX1180006	RONDELLE M18 A4 INOX WASHER M18	316I	
4	30	VGOUI180976	GOUJON M18-67 bm30 STUD BOLT M18	SA-193 BBM CL2	/
3	1	SV004M11000	COUVERCLE ACCRO.D550 ASS CATCHING FLANGE D550	SUB-ASS	BDPCD000038
2	1	JTOXM000008	JOINT TORIQUE D1930X6,99 O RING id 2913X6,99	NITRILE	
1	1	AU023M01001	ENVELOPPE BRUTE PRIMARY WALL	SUB-ASS	

Rev.	Date	Modifications	Dess.	Verif.
4	06-Oct-22	Flushing ring (item 18) added.	XT	QL
3	08-Jun-22	Finition : RAL 1003 (jaune sécurité) devient RAL 1002 (jaune sable). Finish : RAL 1003 (signal yellow) becomes RAL 1002 (sand yellow).	XT	QL
2	16-Mar-22	Heads designed thickness increased. Epaisseur calculée des fonds augmentée.	XT	LM
1	08-Mar-22	BDAEP000008 replaced by BDAEP000015	XT	LM
0	22-Feb-22	Edition initiale - First issue	XT	DF

ACCUMULATEUR EAUX USÉES A VESSIE / SEWAGE SURGE VESSEL 5000 LITRES
PS / Working pressure : 14,00 bar - PE / Test pressure : 21,00 bar

ACCUMULATEUR EAUX USÉES A VESSIE / SEWAGE SURGE VESSEL 1321 US GALLONS
PS / Working pressure : 150,00 PSI - PE / Test pressure : 225,00 PSI

CHARLATTE RESERVOIRS
FAYAT GROUP
17, RUE PAUL BERT 89400 MIGENNES (FRANCE)
TEL. : 03.86.92.30.00
TELECOPIEUR : 03.86.92.30.01

NORME / NORM Q.100			A0
DATE - DATE : 22-Feb-22	TOL. GENE. - GENE. TOL. : ±1		
POIDS - WEIGHT : 2003 kg	MATIERE - MATERIAL : 5 ITEMS		
TRAITEMENT - ENGLUMENT :			
N°	AU023M00001		
REV. 4	Sheet N° : 1 / 1		

THIS DOCUMENT IS THE PROPERTY OF CHARLATTE S.A. AND CANNOT BE REPRODUCED OR COMMUNICATED WITHOUT PRIOR AGREEMENT OF CHARLATTE RESERVOIRS S.A.S.

COMMONWEALTH OF PUERTO RICO
DEPARTMENT OF NATURAL AND ENVIRONMENTAL RESOURCES
INFRASTRUCTURE PROJECTS DIVISION
THESE DOCUMENTS HAVE BEEN REVIEWED AND
APPROVED IN ACCORDANCE WITH THE REQUIREMENTS
OF THE CLEAN WATER STATE REVOLVING FUND PROGRAM

JAVIER VERARDI MATOS, PE
CHIEF

11/10/2026
DATE

ECHELLE / SCALE 0,500

ECHELLE / SCALE 0,500

(27) 1,321 BLADDER SURGE TANK , BY CHARLATTE AMERICA
FOR SURGE PROTECTION SYSTEM LOCATION SEE DWG. TAH-PS-01 AND TAH-PS-03.

30% DELIVERABLE

NO.	REMARKS	DATE	BY	APPV'D.
	REVISIONS			

AAF ENGINEERING, PSC
425 CARR 693 - PMB 289 - DORADO PR 00646

DESIGN-BUILD OF REHABILITATION OF WASTEWATER PUMP STATIONS- NORTH REGION (CWSRF-SAHFI)
TOA ALTA, PUERTO RICO
CIP NO. 2-00-9005

Autoridad de Acueductos y Alcantarillados
GOBIERNO DE PUERTO RICO

GOVERNMENT OF PUERTO RICO
AQUEDUCT AND SEWER AUTHORITY

SHEET TITLE: **TOA ALTA HEIGHTS PUMP STATION SURGE PROTECTION SYSTEM**

DRAFT BY: AAF ENGINEERING, PSC	DATE SEPT/2026	SCALE: NTS
DESIGNED BY: AAF ENGINEERING, PSC	DATE SEPT/2026	DRWG NO. TAH-PS-08
REVISED BY: A.A.F.T.	DATE SEPT/2026	SHEET NO. 41 OF 74 SHEETS
SUBMITTED BY: AAF ENGINEERING, PSC	DATE SEPT/2026	–

LEGEND

▬	PANELBOARD, CENTER LINE @ 5'–6" A.F.F. (HIGHEST BREAKER AT NOT MORE THAN 6'–6" A.F.F.) SEE THE PANELBOARDS SCHEDULE.
———	CONDUIT CONCEALED IN CEILING OR ABOVE HUNG CEILING WITH ONE (1) LIVE WIRE, ONE (1) NEUTRAL AND ONE (1) GROUND WIRE. A DIFFERENT AMOUNT OF WIRES ARE INDICATED BY CROSSING BARS: A SHORT BAR DENOTES A LIVE WIRE, A LONG BAR A NEUTRAL WIRE, AND A LONG BAR WITH A FLAGGED TICK MARK A GROUND WIRE.
– – – –	DITTO BUT CONCEALED IN FLOOR OR WALLS, OR UNDERGROUND AS PER THE TRENCH DETAIL
	DENOTES CONDUCTORS IN CONDUIT: SHORT BAR – LIVE WIRE, LONG BAR – NEUTRAL WIRE, LONG BAR WITH A FLAGGED TICK MARK–GROUND WIRE.
	SAFETY SWITCH ADJACENT TO EQUIPMENT AS PER THE SAFETY SWITCHES SCHEDULE. VERIFY EXACT LOCATION AT FIELD WITH ARCHITECT AND/OR CORRESPONDING EQUIPMENT INSTALLER. PROVIDE MOUNTING SUPPORTS AS RQD.
	CIRCUIT BREAKER WALL SURFACE MOUNTED AT 5'–6". LETTERS/NUMBERS DENOTES IDENTIFICATION. SEE ONE LINE DIAGRAM FOR DETAILS.
	MAIN/MOTORS CONTROL PANEL AS SPECIFIED ON THE CORRESPONDING CONTROL/INSTRUMENTATION DRAWINGS. LETTERS/NUMBERS DENOTES IDENTIFICATION. SEE THE ONE LINE DIAGRAM.
	AUTOMATIC TRANSFER SWITCH. SEE THE ONE LINE DIAGRAM. WALL SURFACE MOUINTED AT 5'–6" AFF.
	WALL MOUNTED LIGHTING FIXTURE (WALL PACK) AS PER THE LIGHTING FIXTURE SCHEDULE.
	POLE MOUNTED LIGHTING FIXTURE AS PER THE LIGHTING FIXTURES SCHEDULE.
	SINGLE POLE SWITCH, 15 AMPS, 125 VOLTS, GROUNDING TYPE, COMMERCIAL SPECS. GRADE WITH STAINLESS STEEL COVER PLATE, FLUSH MOUNTED IN 4" OUTLET BOX @ 4'–6" AFF.
	DUPLEX RECEPTACLE, GROUNDING TYPE, 20 AMPS, 125 VOLTS, COMMERCIAL SPECIFICATIONS GRADE W/ STAINLESS STEEL COVER PLATE. FLUSH MOUNTED AT 1–6" IN A 4"SQ. X 1 1/2"D. BOX W/ RAISED COVER.
	DUPLEX RECEPTACLE, GROUNDING TYPE, 20 AMPS, 125 VOLTS WITH GROUND FAULT CIRCUIT INTERRUPTER, STAINLESS STEEL COVER PLATE, COMMERCIAL SPECIFICATIONS GRADE WITH COVER PLATE, FLUSH MOUNTED AT 1'–6" A.F.F. IN A 4"SQ. X 1 1/2"D. BOX W/ RAISED COVER.
E	EXISTING 120V RECEPTACLE.
EXP	EXISTING 120V RECEPTACLE IN EXPLOSION PROOF HOUSING.
WP	DENOTES WEATHER PROOF COVER

LIGHTING FIXTURES SCHEDULE

DESIG–NATION	SYMBOL	DESCRIPTION				LAMPS/TUBES			REMARKS
		TYPE	MANUFACTURER	SERIES/MODEL	VOLTS	QTY.	WATTS	TYPE	
L1		LED 4' SURFACE CEILING MTD.	.	. .	120	1	.	LED 5000' K .L	VAPOR TIGHT, UL LISTED, STAINLESS STEEL LATCHES.
L2		LED SURFACE WALL MOUNTED	.	. .	120	1	.	LED 5000' K .L	WITH PHOTOCELL, BRONZE FINISH, CAST ALUMINUM, UL LISTED, SUITABLE FOR WET LOCATIONS, FULL CUT–OFF.
L3		LED SURFACE CEILING MTD.			120	1	.	LED 5000' K .L	CAST ALUMINUM, UL LISTED, SUITABLE FOR WET LOCATIONS.
L4		LED SURFACE CEILING MTD.			120	1	.	LED 5000' K .L	COPPER FREE ALUMINUM, UL LISTED, SUITABLE FOR HAZARDOUS LOCATIONS CLASS 1 DIV. 1., W/ SS WIRE GUARD
L5									INTENTIONALLY OMITTED.
L6		LED SURFACE WALL MTD.			120	1	.	LED 5000' K .L	COPPER FREE ALUMINUM, UL LISTED, SUITABLE FOR HAZARDOUS LOCATIONS CLASS 1 DIV. 1., W/ SS WIRE GUARD
L7		LED SURFACE WALL MTD.			120	1	.	LED 5000' K .L	COPPER FREE ALUMINUM, UL LISTED, CORROSION RESISTANT, SUITABLE FOR HAZARDOUS LOCATIONS CLASS 1 DIV. 1., W/ SS WIRE GUARD
PL1		LED POLE MOUNTED	.	. .	208	1	.	LED 5000' K .L	CAST ALUMINUM, WITH PHOTOCELL, FULL CUTOFF, INSTALL IN EXISTING CONCRETE POLE REPLACING EXISTING FIXTURE. VERIFY VOLTAGE MATCH THE EXISTING CIRCUIT VOLTAGE.

LIGHTING FIXTURES SCHEDULE NOTES:

1. FOR ALL WALL AND CEILING SURFACE AND PENDANT MOUNTED LIGHTING FIXTURES, PROVIDE A RECESSED MOUNTED OUTLET BOX FOR THEIR REQUIRED ELECTRICAL CONNECTION.
2. ALL LIGHTING FIXTURES SHALL HAVE A MINIMUM MANUFACTURER'S WARRANTY OF 5 YEARS.

SAFETY SWITCHES SCHEDULE

DESIG–NATION	DESCRIPTION					FUSES		REMARKS
	TYPE	FRAME	POLES	VOLTS	ENCLOSURE	TYPE	SIZE	
1	NON FUSIBLE HD	400 A	3	600 V	NEMA 7BCD & 4X, CAST ALUMINUM	N/A	N/A	EXPLOSION PROOF. EATON–CROUSE HINDS SERIES EBM.
2	NON FUSIBLE HD	100 A	3	240 V	NEMA 4X STAINLESS STEEL	N/A	N/A	SQUARE D TYPE HU HEAVY DUTY.
3	NON FUSIBLE HD	30 A	2	240 V	NEMA 4X STAINLESS STEEL	N/A	N/A	SQUARE D TYPE HU HEAVY DUTY.

GENERAL NOTES

1. ALL EQUIPMENT SHALL BE NEW AND APPROVED ACCORDING TO ANSI, NEMA, AND PREPA STANDARDS.
2. CONDUIT MINIMUM SIZE SHALL BE 3/4". UNLESS OTHERWISE INDICATED, IT SHALL BE AS FOLLOWS:

INSIDE GYPSUM/WOOD WALLS AND/OR ABOVE HUNG CEILING:	RIGID STEEL GALVANIZED
INSIDE CONCRETE SLAB, AND OR CONCRETE/BLOCKS WALLS:	PVC SCH. 40
EXPOSED INDOORS AT CEILINGS AND/OR WALLS ABOVE 10'–0" A.F.F.:	PVC COATED R.S.G.
EXPOSED INDOORS AT WALLS 10'–0" OR LESS A.F.F.:	PVC COATED R.S.G.
EXPOSED OUTDOORS:	PVC COATED R.S.G.
UNDERGROUND:	PVC SCH. 40

3. ALL WIRE SHALL BE OF COPPER, TYPE THWN–2 90° INSULATION AND NOT SMALLER THAN #12 AWG UNLESS OTHERWISE INDICATED.
4. COLOR OF ALL WIRING DEVICES SHALL BE IVORY, AND THEIR COVER PLATES SHALL BE MADE OF STAINLESS STEEL.
5. ALL EQUIPMENT SHALL BE GROUNDED ACCORDING TO THE LATEST EDITION OF THE NEC.
6. PROVIDE A #12 AWG GREEN JUMPER CABLE BETWEEN THE RECEPTACLE GROUNDING SCREW AND THE OUTLET BOX GROUNDING SCREW.
7. ALL EQUIPMENT INSTALLED SHALL BE LEFT IN AN OPERATIONAL CONDITION INCLUDING, BUT NOT LIMITED TO SWITCHES, RECEPTACLES, BREAKERS, ETC.
8. INSTALLATION DETAILS ARE ILLUSTRATIVE AND SHOULD NOT BE USED WITHOUT VERIFYING THE JOB SITE CONDITIONS; CONTRACTOR SHALL SUBMIT SHOP DRAWINGS SHOWING ANY DEVIATIONS THEREFROM.
9. BRANCH CIRCUITS USING A COMMON NEUTRAL SHALL BE CONNECTED TO PANEL CIRCUIT BREAKERS ON DIFFERENT PHASE CONDUCTORS.
10. ROUTE OF CONDUITS SHOWN IN LAYOUT IS SCHEMATIC AND INTENDED ONLY TO INDICATE CONNECTIONS BETWEEN OUTLETS OR EQUIPMENTS. EXACT ROUTING SHALL BE DETERMINED AT JOB SITE TO CONFORM WITH STRUCTURAL CONDITIONS.
11. INTENTIONALLY OMITTED.
12. ALL RECEPTACLES INSTALLED OUTDOORS OR BATHROOMS SHALL BE PROVIDED WITH GROUND FAULT CIRCUIT INTERRUPTER PROTECTION.
13. INDICATED HEIGHTS ARE FROM CENTER OF BOX, OR EQUIPMENT, TO THE FINISHED FLOOR, UNLESS OTHERWISE INDICATED.
14. CONTRACTOR SHALL BALANCE ALL LOADS.
15. ALL PANELS, METERS, SAFETY SWITCHES, ETC., SHALL BE LABELED SO AS TO IDENTIFY THEIR USE AND VOLTAGE, IN AN ACCEPTED AND APPROVED MANNER.
16. USE "LIQUID TIGHT" FLEXIBLE METALLIC CONDUIT TO TERMINATE THE CONDUIT RUNS AT ALL MOTORS, GENERATORS, AND/OR HVAC EQUIPMENT. THE LENGHT OF THESE FLEXIBLE CONDUIT SHALL NOT EXCEED 18".
17. EXPANSION FITTINGS SHALL BE USED FOR EVERY CONDUIT CROSSING BUILDING EXPANSION JOINTS.
18. ALL PLASTIC BOXES AND EQUIPMENT SHALL BE FLAMELESS, NON–TOXIC PLASTIC MATERIAL.
19. INTENTIONALLY OMITTED.
20. ALL CONSTRUCTION SHALL BE DONE IN A NEAT AND WORKMEN LIKE MANNER IN ACCORDANCE WITH THE PLANS AND SPECIFICATIONS. THE LATEST EDITION OF THE NATIONAL ELECTRICAL CODE SHALL BE FOLLOWED, EXCEPT WHEN LOCAL REGULATIONS ARE MORE STRINGENT, IN WHICH CASE, LOCAL REGULATIONS SHALL GOVERN.
21. THE RESISTANCE OF THE GROUNDING SYSTEM TO EARTH SHALL NOT EXCEED 10 OHMS. IF THIS CONDITION IS NOT MET, ADDITIONAL GROUND RODS SHALL BE ADDED.
22. ALL METERING EQUIPMENT SHALL BE, BY ALL MEANS, ACCESSIBLE TO PREPAS METER READERS AT ALL TIMES.
23. THE ELECTRICAL CONTRACTOR SHALL LEAVE A #12 AWG TW FISHWIRE IN ALL EMPTY CONDUITS.
24. MANUFACTURERS RECOMMENDATIONS SHALL BE FOLLOWED AT ALL TIMES. IN THE EVENT OF A DISCREPANCY, THE CONTRACTOR SHALL NOTIFY THE DESIGNER AND ALL THE WORK RELATED SHALL BE STOPPED UNTIL ALL DISCREPANCIES HAVE BEEN FULLY RESOLVED.
25. BEFORE ANY EQUIPMENT IS PURCHASED, ELECTRICAL CONTRACTOR SHALL VERIFY WITH THE MECHANICAL CONTRACTOR THAT ALL HVAC CONTROL AND PROTECTION EQUIPMENT (STARTERS, CIRCUIT BREAKERS, SAFETY/DISC. SWITCH, ETC..) FOLLOWS THE ACTUAL EQUIPMENT MANUFACTURER'S RECOMMENDATIONS/REQUIREMENTS AS PER THE NEC.
26. ALL CONDUIT RUNS SHALL BE CONCEALED IN WALLS, ROOF, OR FLOOR SLABS; UNDERGROUND; OR ABOVE HUNG CEILING, EXCEPT WHERE LOCATED IN THE FOLLOWING AREAS WHERE EXPOSED CONDUIT RUNS ARE PERMITTED: AT UTILITIES POLES RISERS, AT CONTROL ROOMS, ALONG PLANTS EXTERIOR STRUCTURES. WHERE CONDUITS ARE INSTALLED EXPOSED, WIRING DEVICES SHALL BE SURFACE MOUNTED IN FS OR FD TYPE CAST ALUMINUM BOXES.
27. IF AVAILABLE, UNDERGROUND METAL WATER PIPES, BUILDING METAL FRAME OR STRUCTURE, CONCRETE ENCASED ELECTRODES, AND/OR BLDG. UNDERGROUND GROUND LOOP SHALL FORM THE GROUNDING ELECTRODE SYSTEM, AND SHALL BE BONDED TOGETHER AND TO THE REQUIRED GROUND RODS, AND CONNECTED TO THE NEUTRAL BAR AT THE SERVICE ENTRANCE EQUIPMENT, AS REQUIRED BY THE NEC. SECONDARY NEUTRAL OF ANY TRANSFORMER DOWNSTREAM TO THE SERVICE EQUIP. SHALL ALSO BE CONNECTED TO THIS GROUNDING ELECTRODE SYSTEM.
28. ALL JUNCTION BOXES AND OR CONDUIT BODIES (CONDULETS) SHALL BE READILY ACCESSIBLE.
29. INTENTIONALLY OMITTED.
30. ALL CABLES, CONDUITS, AND DUCT PENETRATIONS THROUGH FIRE–RATED WALLS AND FLOORS SHALL BE SEALED USING A 3 HOURS FIRE RESISTANT JOINT SEALER APPROVED FOR THIS USE.
31. INTENTIONALLY OMITTED.
32. TEMPORARY WIRING, CONNECTIONS, AND/OR STAND BY GENERATION SYSTEM SHALL BE PROVIDED AS REQUIRED TO MAINTAIN EXISTING ELECTRICAL FACILITIES IN SERVICE DURING CONSTRUCTION.
33. PRIOR TO BID, THE ELECTRICAL CONTRACTOR SHALL VERIFY THE FINAL LOCATION OF ANY ELECTRICAL DEVICE, OUTLET, AND/OR ELECTRICAL EQUIPMENT NOT SHOWN ON DRAWINGS PLANS, BUT ON THE ELECTRICAL DIAGRAMS, RISERS, NOTES AND SPECIFICATIONS. CHANGE ORDERS RELATED TO FINAL LOCATIONS WILL NOT BE ACCEPTED ON THIS PROJECT.
34. ALL RECEPTACLES SHALL BE PROVIDED AT COVERPLATE WITH TYPE WRITTEN MACHINE MADE LABELS INDICATING THE PANELBOARD AND CIRCUIT FEEDING IT.
35. SUBMIT TO PPP/AAA PERSONNEL THEIR EVALUATION AND APPROVAL ANY ELECTROMECHANICAL EQUIPMENT SPECIFICATION DATA BEFORE THEIR PURCHASE. NOT DOING SO WILL NOT GUARANTEE THEIR FINAL AAA ACCEPTANCE.
36. ALL JUNCTION BOXES AND ELECTRICAL EQUIPMENT MOUNTING SUPPORTS AND HARDWARE SHALL BE STAINLESS STEEL.

EQUIPMENT NOMENCLATURE

G	GATE	MCP	MAIN CONTROL PANEL
F	FAN	SP	SUMP PUMP
A/C	AIR CONDITIONING EQUIPMENT	EF	EXHAUST FAN
CP	CISTERN PUMP	MCB	MAIN CIRCUIT BREAKER
EH	ELECTRIC HOIST	SWP	SEWER WATER PUMP
HG	HYDRAULIC GRINDER	DTP	DIESEL TANK PUMP
MX	MIXER		

NOTE:

WHERE CONNECTION TO ANY OF THESE EQUIPMENT IS REQUIRED, EXACT LOCATION OF OUTLET AND/OR DEVICE SHALL BE VERIFIED AT FIELD W/ THE ARCHITECT AND THE CORRESPONDING EQUIPMENT INSTALLER.

CAMPA, CERRATO, & ASSOC. ENGINEERS, P.S.C.
CONSULTING ELECTRICAL ENGINEERS
#9 Chardon Ave., Suite 201
HATO REY P.R. 00918
email: cmc@campacerrato.com
TEL.: 787–810–9360

COMMONWEALTH OF PUERTO RICO
DEPARTMENT OF NATURAL AND ENVIRONMENTAL RESOURCES
INFRASTRUCTURE PROJECTS DIVISION
THESE DOCUMENTS HAVE BEEN REVIEWED AND APPROVED AS CONSISTENT WITH THE REQUIREMENTS OF THE CLEAN WATER STATE REVOLVING FUND PROGRAM
11/10/2026 DATE
JAVIER VERARDI MATOS, PE
CHIEF

30% DELIVERABLE

NO.	REMARKS	DATE	BY	APPV'D.

REVISIONS

AAF ENGINEERING, PSC
425 CARR 693 · PMB 269 · DORADO PR 00646

DESIGN-BUILD OF REHABILITATION OF WASTEWATER PUMP STATIONS-NORTH REGION (CWSRF-SAHFI)
TOA ALTA, PUERTO RICO
CIP NO. 2–00–9005

Autoridad de Acueductos y Alcantarillados
GOBIERNO DE PUERTO RICO

GOVERNMENT OF PUERTO RICO
AQUEDUCT AND SEWER AUTHORITY

SHEET TITLE: GENERAL ELECTRICAL LEGEND AND NOTES		SCALE:	N/A
DRAFT BY: AAF ENGINEERING, PSC	DATE: SEPT./2026	DRWG NO.	EG001
DESIGNED BY: AAF ENGINEERING, PSC	DATE: SEPT./2026	SHEET NO.	42
REVISED BY: A.A.F.T.	DATE: SEPT./2026	OF	74
SUBMITTED BY: AAF ENGINEERING, PSC	DATE: SEPT./2026	SHEETS	

PREPA GENERAL NOTES:

1. ALL OF THE INSTALLATIONS SHALL BE MADE ACCORDING TO THE APPLICABLE PREPA CONSTRUCTION STANDARDS AND ALL PREPA CIRCULAR LETTERS.
2. THE OWNER IS RESPONSIBLE OF REQUESTING AND OBTAINING, BEFORE THE PROJECT'S START, ALL ENDORSEMENTS, PERMITS, AND RIGHT OF WAYS, REQUIRED BY GOVERNMENT AND PRIVATE ENTITIES RELATED TO THE DEVELOPMENT OF THE PROPOSED PROJECT.
3. CONTRACTOR SHALL COORDINATE THE SERVICES OF A LICENSED ENGINEER TO INSPECT THE ELECTRICAL CONSTRUCTION WORK IN ACCORDANCE WITH LAW NO. 7 OF JULY 19, 1985, AS AMENDED, AND WITH THE CURRENT PREPA PROJECTS DRAWINGS AND CONSTRUCTION WORK CERTIFICATION RULES MANUAL. CONTRACTOR SHALL NOTIFY PREPA SUCH DESIGNATED INSPECTOR PRIOR TO THE PROJECT'S START.
4. THE ELECTRICAL WORK, AS DESIGNED ON THESE DRAWINGS, SHALL BE PERFORMED FOLLOWING THE BEST INDUSTRY PRACTICE AND CONSTRUCTION STANDARDS IN ACCORDANCE WITH THE PREPA AND AFFECTED AGENCIES ADOPTED NORMS AND STANDARDS, AS WELL AS WITH THE NEC, NESC, IEEE, NFPA, NEMA AND ANSI CODES/STANDARDS.
5. CONTRACTOR IS NOT AUTHORIZED TO PERFORM CHANGES TO THESE DRAWINGS. IS THE CONTRACTOR'S RESPONSIBILITY TO CONSULT THE DRAWINGS DESIGNER ENGINEER AND/OR DESIGNATED INSPECTOR ABOUT ANY DOUBTS ARISING FROM DRAWINGS INTERPRETATIONS, WORK REQUIREMENTS, TECHNICAL SPECIFICATIONS, OR DISCREPANCIES FROM EXISTING FIELD CONDITIONS WITH THE ONES USED FOR THE DESIGN.
6. CONTRACTOR SHALL NOTIFY PREPA ABOUT THE PROJECT'S START DATE, SUBMITTING THE CORRESPONDING REGION DISTRIBUTION ENGINEERING DEPARTMENT PROJECT'S START NOTIFICATION FORM, AT LEAST 15 DAYS IN ADVANCE TO SUCH DATE.
7. THE PROJECT'S INSPECTOR AND ELECTRICAL CONTRACTOR ARE RESPONSIBLE OF ASSISTING TO A PRECONSTRUCTION MEETING, TO BE COORDINATED WITH PREPA'S CORRESPONDING REGION DISTRIBUTION ENGINEERING DEPARTMENT.
8. ALL WORK TO BE PERFORMED ON ENERGIZED LINES, INCLUDING THIS PROJECT'S CONNECTION, SHALL BE DONE BY PREPA. CONTRACTOR IS RESPONSIBLE OF ALL THIS PREPA WORK MATERIALS AND LABOR COSTS. CONTRACTOR SHALL REQUEST PREPA AN ESTIMATE TO PERFORM THIS WORK, WHICH WILL BE VALID FOR 3 MONTHS FROM ITS ISSUE DATE.
9. ALL WORK ALONG PREPA'S RIGHT OF WAY AREAS WITHOUT THEIR WRITTEN CONSENT IS PROHIBITED.
10. PREPA WILL NOT APPROVE CONNECTION OF PROJECTS THAT INVADE THEIR RIGHT OF WAYS, OR THAT DO NOT COMPLY WITH THE REQUIRED SAFETY CLEARANCES.

PREPA MATERIAL NOTES:

1. ALL EQUIPMENT TO BE USED FOR THE CONSTRUCTION SHALL COMPLY WITH IEEE, ANSI, NEMA, & & ASTM STANDARDS.
2. IS THE CONTRACTOR'S RESPONSIBILITY TO VERIFY WITH PREPA THAT ALL MATERIALS TO BE USED IS APPROVED BY THEM PRIOR TO ITS INSTALLATION. PREPA RESERVES THE RIGHT TO ACCEPT ANY EQUIPMENT TO BE TRANSFERRED TO THEM.
3. WITHIN ONE MILE TO SEA SHORE OR SEA WATER BODIES, ALL TRANSFORMERS, TRANSCLOSURES, AND METERING DEVICES ENCLOSURES & HARDWARE SHALL BE STAINLESS STEEL.
4. FOR UNDERGROUND SYSTEMS, CABLES FOR PRIMARY DISTRIBUTION VOLTAGE LINES SHALL BE PROVIDED WITH 15 KV TERMINATIONS, AND CABLES FOR PRIMARY SUB TRANSMISSION VOLTAGE LINES (38 KV) SHALL BE PROVIDED WITH 46 KV TERMINATIONS.
5. FOR OVERHEAD SYSTEMS, INSULATORS FOR PRIMARY DISTRIBUTION VOLTAGE LINES SHALL BE OF THE POLYMER TYPE, RATED FOR 15 KV; AND INSULATORS FOR OVERHEAD CABLES OF PRIMARY SUB TRANSMISSION VOLTAGE LINES (38 KV), SHALL BE OF THE POLYMER TYPE, RATED FOR 46 KV.
6. CONTRACTOR IS RESPONSIBLE TO LABEL ALL TRANSFORMER TO BE TRANSFERRED TO PREPA WITH A PROPERTY NUMBER, TO BE INDICATED BY THE CORRESPONDING DISTRIBUTION ENGINEERING DEPARTMENT.

PREPA SYSTEM NOTES:

1. CONTRACTOR IS RESPONSIBLE TO PERFORM ACCEPTANCE TEST TO PRIMARY AND SECONDARY CABLES (WITH THEIR CORRESPONDING TERMINATIONS INSTALLED). THE RESULTS OF THESE TESTS SHALL BE IN COMPLIANCE WITH THE CORRESPONDING PREPA ESTABLISHED PARAMETERS. THESE TESTS SHALL BE PERFORMED IN COORDINATION WITH A REPRESENTATIVE OF PREPA'S INSPECTIONS OFFICE FOR THE CORRESPONDING DISTRIBUTION ENGINEERING DEPARTMENT.
2. CABLES SHALL BE PROTECTED AGAINST SCRATCHES AND HUMIDITY DURING THEIR INSTALLATION. CONTRACTOR IS RESPONSIBLE OF INSTALLING CABLES USING THE RECOMMENDED PULLING PRACTICES IN ORDER TO AVOID EXCEEDING THE MAXIMUM MANUFACTURER SPECIFIED PULLING TENSION FOR THE CABLE.
3. COVERS FOR MANHOLES TO BE INSTALLED AT PLANTING AREAS SHALL BE PROTECTED BY A REINFORCED CONCRETE SLAB, IN ACCORDANCE TO STANDARD URD-52.
4. WITHIN ONE MILE TO SEA SHORE OR SEA WATER BODIES, EXPOSED CONDUIT RISERS SHALL BE PVC SCH 80, OR FIBERGLASS, AS APPROVED BY PREPA.
5. UNDERGROUND SYSTEM CONDUIT BANKS SHALL BE INSPECTED BY PREPA PRIOR TO THEIR BACKFILL.
6. EVERY UNDERGROUND CABLE CONDUITS BELOW AREAS EXPOSED TO VEHICULAR TRAFFIC SHALL BE COVERED WITH A CONCRETE ENVELOPE. THOSE UNDERGROUND CONDUIT RUNS CLOSE TO OTHER UTILITIES SHALL KEEP A MINIMUM SEPARATION CLEARANCE OF 13" BETWEEN THEM.
7. FOR EACH PRIMARY FUSE UNIT INSTALLED AT A SUBSTATION, CONTRACTOR SHALL PROVIDE AN ADDITIONAL SPARE UNIT.
8. SUBSTATION GROUND SYSTEM CONNECTIONS SHALL BE MADE USING APPROVED COMPRESSION CONNECTORS OR EXOTHERMIC WELD.
9. EVERY SPARE CONDUIT SHALL BE PROVIDED WITH A FISHWIRE.
10. EVERY DISTRIBUTION SYSTEM SHALL HAVE A MAXIMUM RESISTANCE TO EARTH OF 10 OHMS. A GROUND ROD AND ITS CONNECTION TO THE OVERHEAD NEUTRAL CABLE SHALL BE PROVIDED AT EVERY 4 POLES, OR A 1,000 FT, AND WHEREVER A TRANSFORMER IS INSTALLED.
11. EACH POLE CONCRETE BASE (SELF SUPPORT), SHALL BE PROVIDED WITH 2 SPARE CONDUITS FOR FUTURE USE AS REQUIRED BY PREPA.
12. POLES CONCRETE BASES SHALL BE INSPECTED BY PREPA DURING ITS CONSTRUCTION PHASE.

PREPA SPECIAL NOTES:

1. CONTRACTOR SHALL PAY PREPA A FEE OF:
   - ☒ THE AMOUNT OF $XXXXX.XX TO IMPROVE THE EXISTING ELECTRICAL SYSTEM.
   - ☐ THE CONSTRUCTION WORK REQUIRED ON THE EVALUATION LETTER FOR THIS PROJECT DATED .

   THIS FEE IS DETERMINED ACCORDING TO THE PROPOSED LOAD AS PER THE LATEST "REGLAMENTO PARA DETERMINAR Y COBRAR LAS APORTACIONES DE PERSONAS O INSTITUCIONES EN PROYECTOS DE DESARROLLO".
2. PREPA WILL NOT CONNECT THE PROJECT TO THEIR ELECTRICAL SYSTEM UNTIL THE OWNER CONSTITUTES THE REQUIRED RIGHT OF WAY IN ACCORDANCE WITH THE "REGLAMENTO DE SERVIDUMBRES PARA LA AUTORIDAD DE ENERGIA ELECTRICA". THIS NOTE APPLIES TO ALL REQUIRED RIGHT OF WAYS, INSIDE OR OUTSIDE THE PROJECT LIMITS.
3. THE INSTALLATION OF PREPA METERING SYSTEMS SHALL BE COORDINATED CORRESPONDING REGION METERING OFFICE. ELECTRICAL CONTRACTOR SHALL CONSULT AND CONFIRM WITH THIS OFFICE THE EQUIPMENT AND MATERIALS TO BE USED IN ADDITION TO THE LOCATION OF MENTIONED METERING EQUIPMENT.
4. THE INSTALLATION OF SUBSTATIONS, TRANSFORMERS, OR ANY OTHER ELECTRICAL EQUIPMENT, ABOVE SEWER, WATER, OR ANY OTHER UTILITIES IS PROHIBITED.

SUBSTATION / PREPA NOTES

1. INTENTIONALLY OMITTED.
2. ALL OF THE INSTALLATIONS SHALL BE MADE ACCORDING TO THE APPLICABLE PREPA CONSTRUCTION STANDARDS AND ALL PREPA CIRCULAR LETTERS.
3. FOR ALL STANDARDS NUMBERS ON THESE DRAWINGS, REFER TO PREPA DISTRIBUTION AND TRANSMISSION STANDARDS MANUALS, AND STREET LIGHTING SYSTEM MANUAL.
4. ALL EQUIPMENT SHALL BE NEW & APPROVED ACCORDING TO ANSI, NEMA AND PREPA STANDARDS.
5. ALL CONSTRUCTION WORK SHALL BE INSPECTED AND CERTIFIED BY AN AUTHORIZED INSPECTOR AS REQUIRED ON LAW 7 OF JULY 19, 1985, AND PREPA CIRCULAR LETTER 99-03.
6. COORDINATE THE POINT OF CONNECTION AT THE PREPA LOCAL OFFICE BEFORE CONSTRUCTION BEGINS.
7. THE CONTRACTOR SHALL INFORM THE LOCAL PREPA OFFICE AREA ENGINEER OF THE BEGINNING OF THE ELECTRICAL WORK OF THIS PROJECT.
8. ALL WORK ON EXISTING LINES SHALL BE DONE BY PREPA AT CONTRACTOR EXPENSES.
9. ALL DISTRIBUTION LINES, POLES, GUY WIRES, ANCHORS, PUBLIC LIGHTING AND DISTRIBUTION EQUIPMENT SHALL BE INSTALLED IN ACCORDANCE WITH THE LATEST REVISIONS OF THE PREPA STANDARDS AND CIRCULAR LETTERS, AND THE CORRESPONDING MANUFACTURERS RECOMMENDATIONS.
10. ALL CONSTRUCTION SHALL BE DONE IN A NEAT AND WORKMEN LIKE MANNER IN ACCORDANCE WITH THE PLANS AND SPECIFICATIONS. THE LATEST EDITION OF THE NATIONAL ELECTRICAL CODE SHALL BE FOLLOWED, EXCEPT WHEN LOCAL REGULATIONS ARE MORE STRINGENT, IN WHICH CASE, LOCAL REGULATIONS SHALL GOVERN.
11. PRIMARY DISTRIBUTION EQUIPMENT SHALL BE PROVIDED WITH DANGER SIGNS AS REQUIRED BY PREPA. THE PRIMARY AND SECONDARY DISTRIBUTION SYSTEM SHALL BE IDENTIFIED AT ITS DISTRIBUTION EQUIPMENT, INCLUDING THE PULL BOXES AND CONDUIT RISERS AT POLES, IN ORDER TO INDICATE THEIR RATING AND CAPACITIES, AND HOW THE SYSTEM IS INTERCONNECTED ("FROM" AND "TO"), AS REQUIRED BY PREPA.
12. ALL POLE MOUNTED TRANSFORMERS AND UNDERGROUND PRIMARY FEEDERS RISERS AT POLES SHALL BE PROTECTED BY A POLYMER INSULATED, POLE RISER TYPE LIGHTNING ARRESTER.
13. METERS SHALL BE, BY ALL MEANS, ACCESSIBLE TO PREPA METER READERS AT ALL TIMES. NO STORAGE SHALL BE PERMITTED IN METER'S CLOSETS AND/OR ROOMS.
14. THE PREPA WILL NOT ENERGIZE THE PROJECT UNTIL THE EASEMENTS HAVE BEEN GRANTED BY MEANS OF A CERTIFICATE ISSUED BY THE PREPA LEGAL DEPARTMENT. THIS NOTE APPLIES TO ALL TYPES OF EASEMENTS INSIDE OR OUTSIDE OF THE PROJECT LIMITS.
15. STREET LIGHTING CIRCUITS SHALL BE PROTECTED WITH FUSES APPROVED BY PREPA.
16. SECONDARY PEDESTALS OR VAULTS SHALL BE INSTALLED ON PLANTING STRIP, AND NEVER IN FRONT OR BETWEEN GARAGES ENTRANCES.
17. SPLICING SHALL NOT BE PERMITTED ON PRIMARY OR SECONDARY FEEDERS.
18. PROVIDE 6" WIDE YELLOW ELECTRICAL IDENTIFYING TAPE FOR UNDERGROUND CABLES, INSTALL OVER PVC UNDERGROUND CONDUITS AND DUCTS AT 12" BELOW THE FINISHED GRADE. THE TAPE SHALL BE PERMANENTLY PRINTED WITH CONTINUOS BLACK LETTER, 1-1/4" X 5/8" WITH THE WORDS: "PELIGRO-PELIGRO-PELIGRO" ON THE TOP, AND "LINEAS ELECTRICAS DEBAJO" ON THE BOTTOM.
19. AT STREET CROSSINGS, SIDEWALK AND WHERE CABLES CROSSES GAS, SEWAGE AND OTHER UTILITY FACILITIES, ELECTRICAL CONDUITS SHALL BE PROTECTED WITH 4" OF CONCRETE ENVELOPE AND KEPT AT A MINIMUM SEPARATION OF 13" FROM THE OTHER UTILITY LINES.
20. GROUND SYSTEM FOR PEDESTALS, DISTRIBUTION TRANSFORMERS, AND SWITCHING UNITS SHALL HAVE A MAXIMUM RESISTANCE OF TEN (10) OHMS. GROUND SYSTEM FOR SUBSTATIONS (MAT) SHALL HAVE A HAVE A MAXIMUM IMPEDANCE OF TWO (2) OHMS. CONTRACTOR SHALL VERIFY THIS CONDITION AT FIELD, AND IF IT IS NOT MET, ADDITIONAL GROUND RODS SHALL BE ADDED.
21. CONTRACTOR SHALL SUPPLY ONE SPARE FUSE FOR EACH PRIMARY FUSE HOLDER.
22. BLADES OR FUSES OF PRIMARY SWITCHES SHALL BE DE-ENERGIZED IN THE OPEN POSITION.
23. WITHIN ONE MILE TO SEA SHORE OR SEA WATER BODIES, ALL TRANSFORMERS, TRANSCLOSURES, AND METERING DEVICES ENCLOSURES SHALL BE STAINLESS STEEL, AND ALL CONDUITS AT POLE RISERS SHALL BE PVC SCH. 80. THIS REQUIREMENT SHALL GOVERN OVER ANY SPECIFICATIONS INDICATED FOR THESE EQUIPMENT ON THE DRAWINGS. COORDINATE WITH THE PREPA INSPECTOR THIS REQUIREMENT PRIOR TO THE PURCHASE OF EQUIPMENT.
24. BLADES OR FUSE RUN SHALL ALWAYS BE CLEARED AT LEAST SIX INCHES FROM METAL PARTS.
25. THERE SHALL BE NO WATER, NOR SEWAGE PIPE LINES UNDER THE FLOOR OF TRANSCLOSURES, SWITCHING UNITS, OR PAD MOUNTED TRANSFORMERS.
26. INSTALL APPROVED SILICON RUBBER TYPE PREFABRICATED STRESS CONES (3M) AT ALL SHIELDED PRIMARY CABLES TERMINALS
27. CONCRETE BASE FOR THE INSTALLATION OF TRANSCLOSURE & SWITCHING UNITS SHALL BE COORDINATED WITH PREPA AND CONSTRUCTED SO AS TO PROVIDE SUFFICIENT CLEARANCE BETWEEN CONDUITS TERMINATION AND TRANSCLOSURE CABLE TERMINALS, FOR MIN. BENDING RADIUS REQUIRED BY SHIELDED CABLES AND STRESS CONES.
28. ALL PRIMARY CABLES SHALL BE HI-POT TESTED AFTER PREFABRICATED STRESS CONES ARE INSTALLED AT ALL TERMINALS AS PER PREPA REGULATIONS.
29. THE CONTRACTOR SHALL VERIFY THE PRIMARY VOLTAGE SERVING THE PROJECT BEFORE BUYING THE CABLE, TRANSFORMERS, AND/OR ANY OTHER PRIMARY EQUIPMENT. IF ANY DISCREPANCIES ARE FOUND BETWEEN THIS PRIMARY VOLTAGE AND THE SPECIFIED ON THE DRAWINGS, THE CONTRACTOR SHALL ADVISE THE ENGINEER TO MAKE THE REQUIRED MODIFICATIONS TO THE DRAWINGS.
30. ALL DISTRIBUTION TRANSFORMERS SHALL BE DESIGNED AND CONSTRUCTED WITH IMPROVED LOW LOSSES CHARACTERISTICS IN ACCORDANCE W/ PREPA CIRCULAR LETTER 94-00.
31. GROUNDING MAT FOR ELECTRICAL SYSTEM SHALL BE CONSTRUCTED WITH EQUAL OR APPROVED EQUALS TO "HY GROUND" COMPRESSION CONNECTORS AND/OR "CADWELD" JOINTS WHERE APPLICABLE.
32. INSULATORS FOR PRIMARY DISTRIBUTION LINES SHALL BE OF THE SILICON RUBBER TYPE AS REQUIRED BY PREPA ON THEIR CIRCULAR LETTER 00-01.
33. TRANSCLOSURES, SWITCHING UNITS, AND PAD MOUNTED TRANSFORMERS SHALL BE TAMPER PROOF W/ PADLOCK PROVISIONS ON ALL DOORS. THEIR ROOF SHALL BE DESIGNED IN A 4-WAY PITCH IN ORDER TO PROVIDE A GOOD WATER DRAINAGE.
34. NO CONSTRUCTION OF ANY KIND SHALL BE PERMITTED ON PREPA'S RIGHT OF WAY'S.
35. IF AVAILABLE, UNDERGROUND METAL WATER PIPES, BUILDING METAL FRAME OR STRUCTURE, CONCRETE ENCASED ELECTRODES, AND/OR BLDG. UNDERGROUND GROUND LOOP SHALL FORM THE GROUNDING ELECTRODE SYSTEM, AND SHALL BE BONDED TOGETHER AND TO THE REQUIRED GROUND RODS, AND CONNECTED TO THE NEUTRAL BAR AT THE SERVICE ENTRANCE EQUIPMENT, AS REQUIRED BY THE NEC. SECONDARY NEUTRAL OF ANY TRANSFORMER DOWNSTREAM TO THE SERVICE EQUIPMENT SHALL ALSO BE CONNECTED TO THIS GROUNDING ELECTRODE SYSTEM.
36. TEMPORARY WIRING, CONNECTIONS AND/OR A STAND BY GENERATION SYSTEM SHALL BE PROVIDED AS REQUIRED TO MAINTAIN ANY EXISTING ELECTRICAL FACILITIES IN SERVICE DURING CONSTRUCTION.
37. THE DRAWINGS ARE NOT APPROVED FOR CONSTRUCTION UNTIL THEY ARE ENDORSED BY PREPA. ENDORSED DRAWINGS SHALL BE SIGNED BY PREPA'S ENGINEER ON THE CORRESPONDING "CERTIFICATION ENDORSEMENT" FORM.
38. TRANSCLOSURE'S PRIMARY AND SECONDARY BUS BARS SHALL BE SILVER PLATED COPPER.
39. GROUNDING SYSTEM AND ITS INSTALLATION SHALL COMPLY WITH PREPA'S MANUAL FOR DESIGN AND CONSTRUCTION OF MATS CONNECTED TO GROUND FOR SUBSTATIONS AND EQUIPMENT.

COMMONWEALTH OF PUERTO RICO
DEPARTMENT OF NATURAL AND ENVIRONMENTAL RESOURCES
INFRASTRUCTURE PROJECTS DIVISION
THESE CONSTRUCTION PLANS WERE REVIEWED AND APPROVED IN ACCORDANCE WITH THE REQUIREMENTS OF THE CLEAN WATER STATE REVOLVING FUND PROGRAM
11/10/2026 DATE
JAVIER VERDEJO MATOS, PE
CHIEF

CAMPA, CERRATO, & ASSOC. ENGINEERS, P.S.C.
CONSULTING ELECTRICAL ENGINEERS
#9 Chardon Ave., Suite 201
HATO REY P.R. 00918
email: cmc@campacerrato.com
TEL.: 787-810-9360

30% DELIVERABLE

NO.	REMARKS	DATE	BY	APPV'D.

REVISIONS

aaf
AAF ENGINEERING, PSC
425 CARR 693 - PMB 269 - DORADO PR 00646

DESIGN-BUILD OF REHABILITATION OF WASTEWATER PUMP STATIONS-NORTH REGION (CWSRF-SAHFI)
TOA ALTA, PUERTO RICO
CIP NO. 2-00-9005

Autoridad de Acueductos y Alcantarillados
GOBIERNO DE PUERTO RICO

GOVERNMENT OF PUERTO RICO
AQUEDUCT AND SEWER AUTHORITY

SHEET TITLE: **GENERAL PREPA NOTES**
SCALE: N/A
DRWG NO. **EG002**
DRAFT BY: AAF ENGINEERING, PSC — DATE: SEPT./2026
DESIGNED BY: AAF ENGINEERING, PSC — DATE: SEPT./2026
REVISED BY: A.A.F.T. — DATE: SEPT./2026
SUBMITTED BY: AAF ENGINEERING, PSC — DATE: SEPT./2026
SHEET NO. **43** OF **74** SHEETS

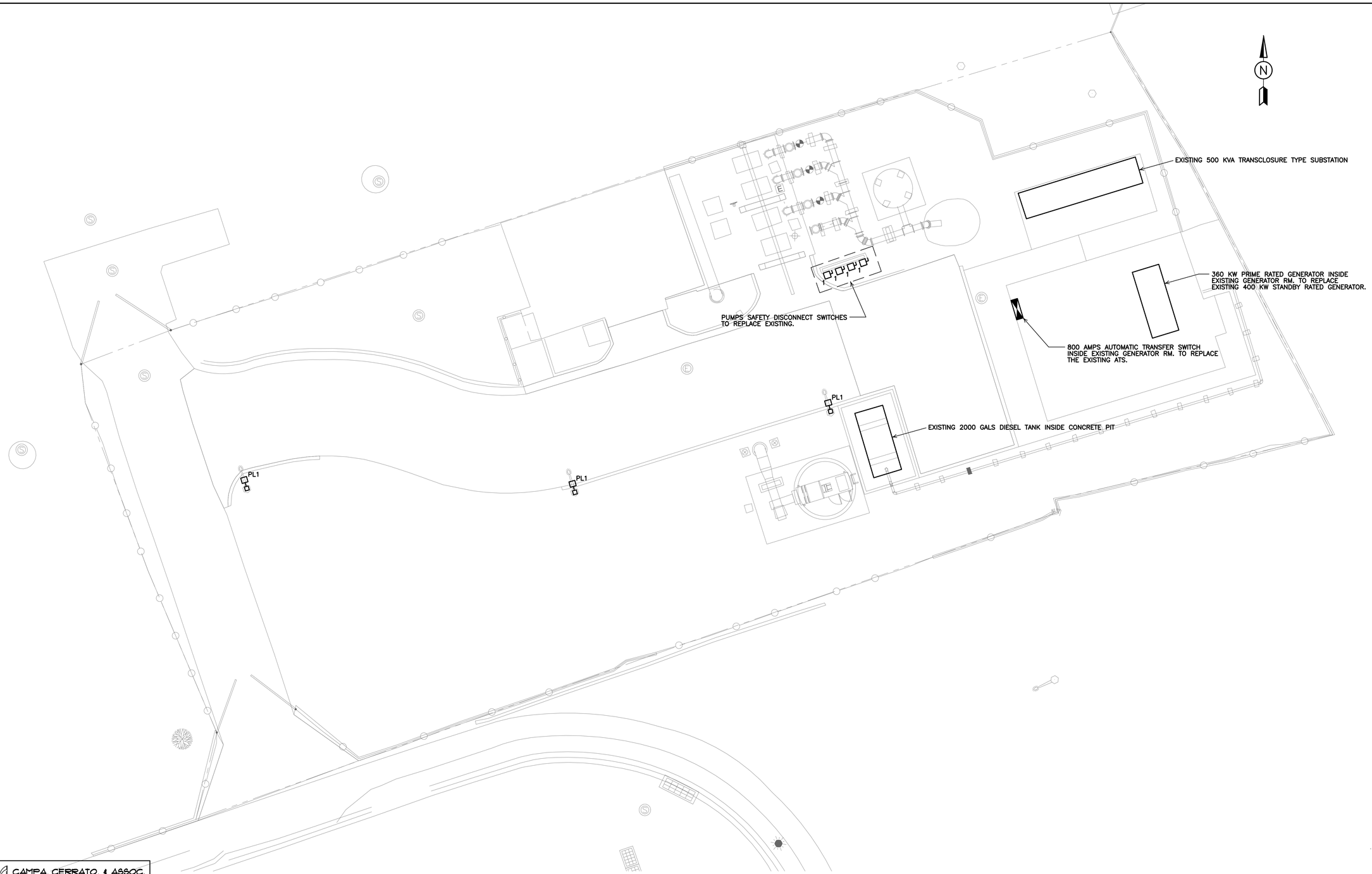

TOA ALTA HEIGHTS PUMPS STATION ELECTRICAL SITE PLAN
SCALE = 1:100

CAMPA, CERRATO, & ASSOC. ENGINEERS, P.S.C.
CONSULTING ELECTRICAL ENGINEERS
#9 Chardon Ave., Suite 201
HATO REY P.R. 00918
email: cmc@campacerrato.com
TEL.: 787-810-9360

COMMONWEALTH OF PUERTO RICO
DEPARTMENT OF NATURAL AND ENVIRONMENTAL RESOURCES
INFRASTRUCTURE PROJECTS DIVISION
THESE DOCUMENTS HAVE BEEN REVIEWED AND APPROVED IN ACCORDANCE WITH THE REQUIREMENTS OF THE CLEAN WATER STATE REVOLVING FUND PROGRAM
11/10/2026 DATE
JAVIER VERARDI MATOS, PE
CHIEF

30% DELIVERABLE

NO.	REMARKS	DATE	BY	APPV'D.
1	LUMA ENDORSEMENT UPDATE	1/22/24		

REVISIONS

aaf
AAF ENGINEERING, PSC
425 CARR 693 - PMB 269 - DORADO PR 00646

DESIGN-BUILD OF REHABILITATION OF WASTEWATER PUMP STATIONS-NORTH REGION (CWSRF-SAHFI)
TOA ALTA, PUERTO RICO
CIP NO. 2-00-9005

Autoridad de Acueductos y Alcantarillados
GOBIERNO DE PUERTO RICO

GOVERNMENT OF PUERTO RICO
AQUEDUCT AND SEWER AUTHORITY

SHEET TITLE: **TOA ALTA HEIGHTS PUMPS STATION ELECTRICAL SITE PLAN**	SCALE: 1:100
	DRWG NO. **TAH-E-101**
DRAFT BY: AAF ENGINEERING, PSC / DATE: SEPT./2026	SHEET NO. **44** OF **74** SHEETS
DESIGNED BY: AAF ENGINEERING, PSC / DATE: SEPT./2026	
REVISED BY: A.A.F.T. / DATE: SEPT./2026	
SUBMITTED BY: AAF ENGINEERING, PSC / DATE: SEPT./2026	

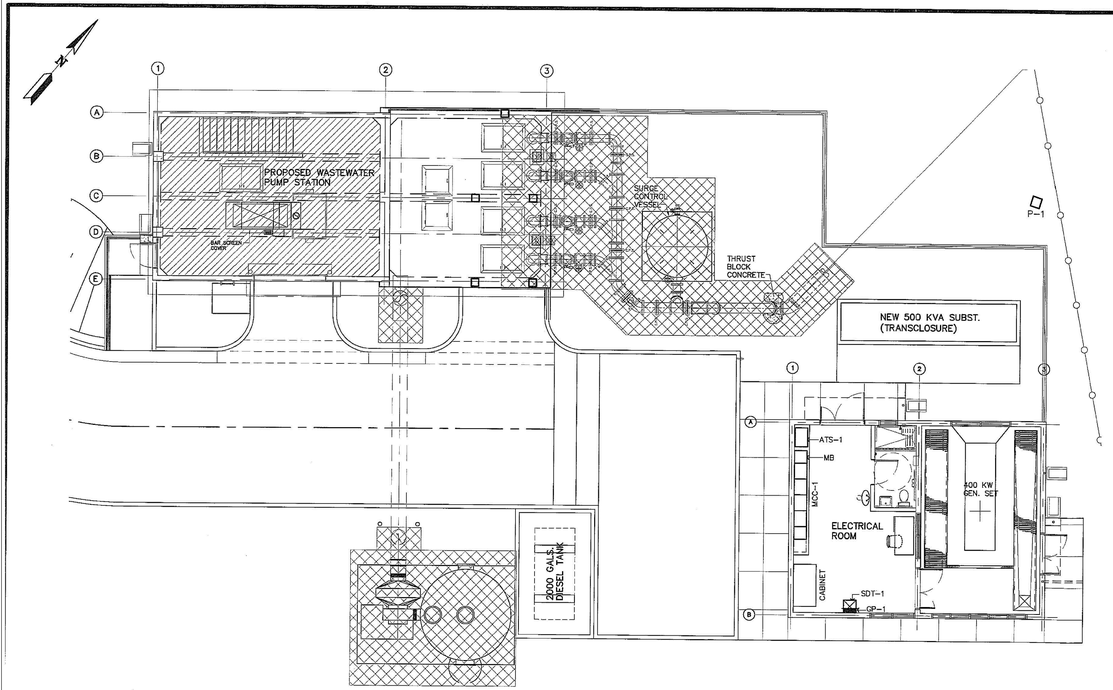

GROUND FLOOR HAZARDOUS AREA CLASSIFICATION
SCALE: 1:100

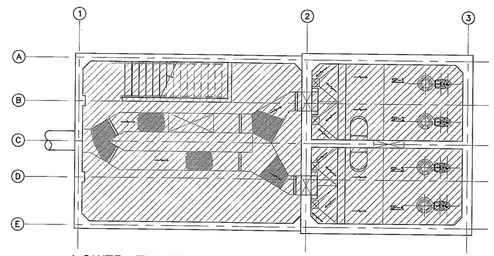

LOWER FLOOR HAZARDOUS AREA CLASSIFICATION
SCALE: 1:100

LEGEND:

- CLASS I, DIVISION 2, AREA AS PER NFPA 820.
- CLASS I, DIVISION 2 AREA WITHIN 3'-0" (0.91M.) OF LEAKAGE SOURCE.
- NON-CLASSIFY AREA

COMMONWEALTH OF PUERTO RICO
DEPARTMENT OF NATURAL AND ENVIRONMENTAL RESOURCES
WATER QUALITY TRUST FUND PROGRAM
THESE DOCUMENTS HAVE BEEN REVIEWED AND APPROVED IN ACCORDANCE WITH THE REQUIREMENTS OF THE CLEAN WATER STATE REVOLVING FUND PROGRAM
11/10/2026
DATE
JAVIER VERARDI MATOS, PE
CHIEF

CAMPA, CERRATO, & ASSOC. ENGINEERS, P.S.C.
CONSULTING ELECTRICAL ENGINEERS
#9 Chardon Ave., Suite 201
HATO REY P.R. 00918
email: cmc@campacerrato.com
TEL.: 787-810-9360

30% DELIVERABLE

NO.	REMARKS	DATE	BY	APPV'D.

REVISIONS

AAF ENGINEERING, PSC
425 CARR 693 - PMB 269 - DORADO PR 00646

DESIGN-BUILD OF REHABILITATION OF WASTEWATER PUMP STATIONS-NORTH REGION (CWSRF-SAHFI)
TOA ALTA, PUERTO RICO
CIP NO. 2-00-9005

Autoridad de Acueductos y Alcantarillados
GOBIERNO DE PUERTO RICO

GOVERNMENT OF PUERTO RICO
AQUEDUCT AND SEWER AUTHORITY

SHEET TITLE: **TOA ALTA HEIGHTS PUMPS STATION HAZARDOUS AREA CLASSIFICATION**

DRAFT BY: AAF ENGINEERING, PSC	DATE: SEPT./2026	SCALE: AS SHOWN
DESIGNED BY: AAF ENGINEERING, PSC	DATE: SEPT./2026	DRWG NO.: TAH-E-401
REVISED BY: A.A.F.T.	DATE: SEPT./2026	SHEET NO.: 45 OF 74 SHEETS
SUBMITTED BY: AAF ENGINEERING, PSC	DATE: SEPT./2026	

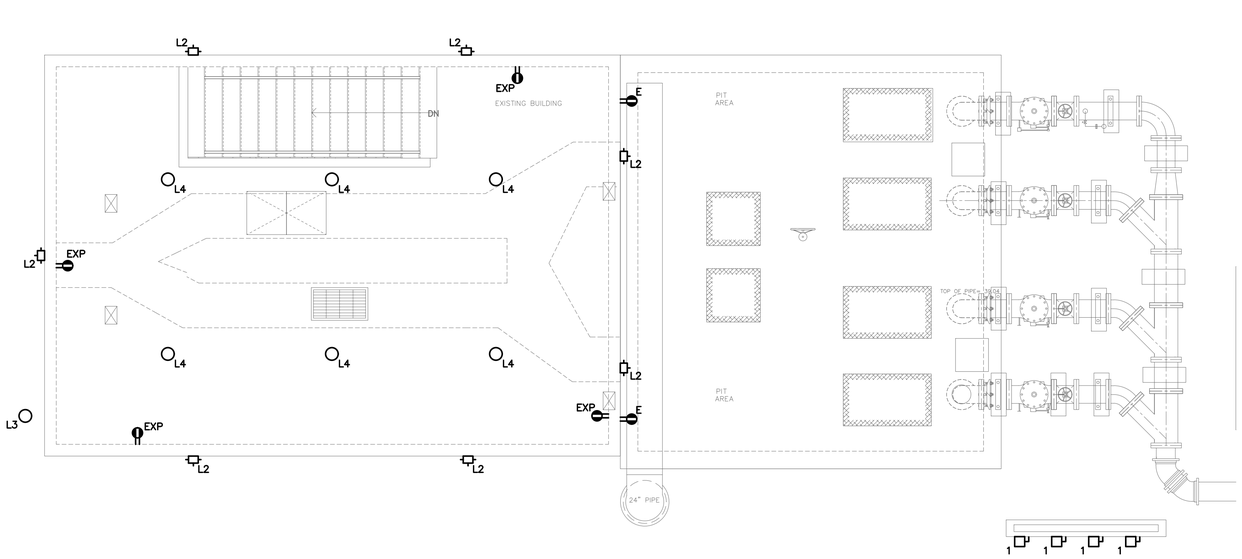

PUMPS STATION UPPER LEVEL ELECTRICAL PLAN
SCALE: 1/4" = 1'-0"

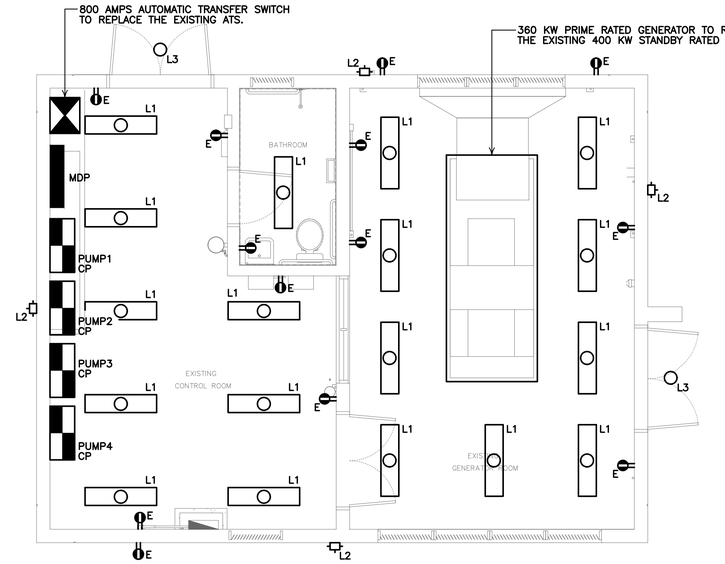

GENERATOR RM. ELECTRICAL PLAN
SCALE: 1/4" = 1'-0"

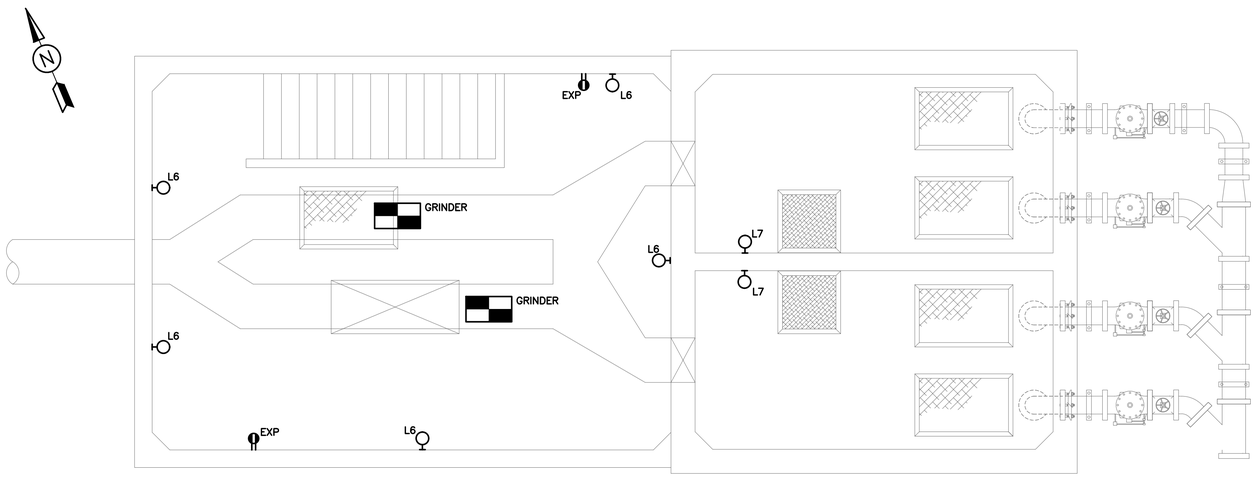

PUMPS STATION LOWER LEVEL ELECTRICAL PLAN
SCALE: 1/4" = 1'-0"

CAMPA, CERRATO, & ASSOC. ENGINEERS, P.S.C.
CONSULTING ELECTRICAL ENGINEERS
#9 Chardon Ave., Suite 201
HATO REY P.R. 00918
email: cmc@campacerrato.com
TEL.: 787-810-9360

NOTES:

1. ALL LIGHTING FIXTURES INDICATED ON THIS DRAWING ARE TO REPLACE THE EXISTING LIGHTING FIXTURES, CONNECTING THEM TO THE EXISTING CIRCUITS.
2. EXISTING MCC AT GENERATOR ROOM SHALL BE REMOVED FOR THE INSTALLATION OF THE NEW MDP AND PUMPS CONTROL PANELS.

COMMONWEALTH OF PUERTO RICO
DEPARTMENT OF NATURAL AND ENVIRONMENTAL RESOURCES
INFRASTRUCTURE PROJECTS DIVISION
THESE DOCUMENTS HAVE BEEN REVIEWED AND APPROVED IN ACCORDANCE WITH THE REQUIREMENTS OF THE CLEAN WATER STATE REVOLVING FUND PROGRAM
11/10/2026 DATE
JAVIER VERARDI MATOS, PE
CHIEF

30% DELIVERABLE

NO.	REMARKS	DATE	BY	APPV'D.
	REVISIONS			

aaf
AAF ENGINEERING, PSC
425 CARR 693 - PMB 269 - DORADO PR 00646

DESIGN-BUILD OF REHABILITATION OF WASTEWATER PUMP STATIONS-NORTH REGION (CWSRF-SAHFI)
TOA ALTA, PUERTO RICO
CIP NO. 2-00-9005

Autoridad de Acueductos y Alcantarillados
GOBIERNO DE PUERTO RICO

GOVERNMENT OF PUERTO RICO
AQUEDUCT AND SEWER AUTHORITY

SHEET TITLE: **TOA ALTA HEIGHTS PUMPS STATION ELECTRICAL PLANS**
SCALE: AS SHOWN
DRWG. NO.: TAH-E-402
DRAFT BY: AAF ENGINEERING, PSC — DATE: SEPT./2026
DESIGNED BY: AAF ENGINEERING, PSC — DATE: SEPT./2026
REVISED BY: A.A.F.T. — DATE: SEPT./2026
SUBMITTED BY: AAF ENGINEERING, PSC — DATE: SEPT./2026
SHEET NO. 46 OF 74 SHEETS

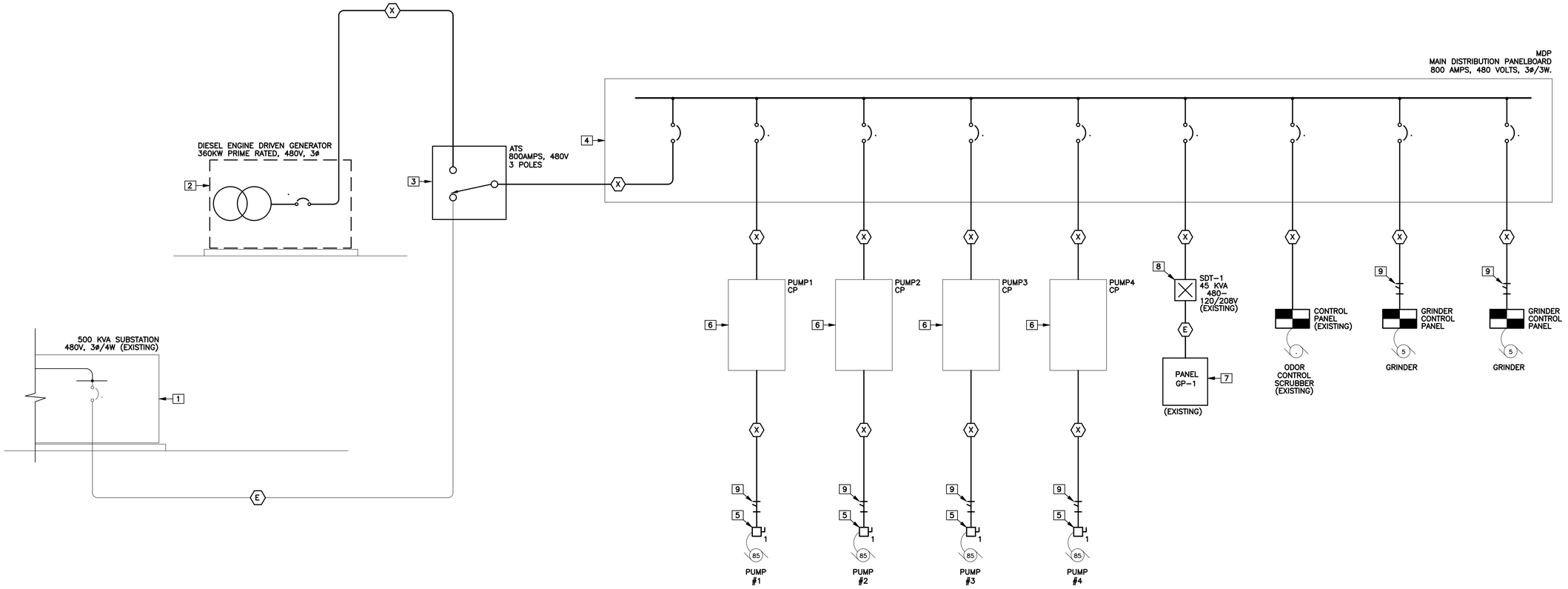

ONE LINE DIAGRAM

FEEDERS LEGEND

DESIG-NATION SITE PLANS	DESIG-NATION ONE LINE	CABLE SIZE			CONDUIT SIZE	NOTE
		LIVE	NEUTRAL	GROUND		
FE	(E)					1
F1	(X)					2

NOTES:

1. FE IS AN EXISTING SECONDARY FEEDER. RE-CONNECT/EXTEND TO NEW DISTRIBUTION EQUIPMENT AS REQUIRED.
2. FX IS NEW FEEDER IN CONDUIT.
3. ALL EXPOSED SECTIONS OF FEEDER CONDUITS SHALL BE PVC COATED RIGID STEEL GALVANIZED.

SINGLE LINE DIAGRAM EQUIPMENT LEGEND:

1. EXISTING TRANSCLOSURE TYPE SUBSTATION SECONDARY COMPARTMENT.
2. 360 KW PRIME RATED DIESEL DRIVEN GENERATOR, 3ø/4W, 480/277 VOLTS, INDOOR TYPE, WITH MAIN CIRCUIT BREAKER, CRITICAL GRADE SILENCER, UL 2200 LISTED/CERTIFIED, AND VIBRATION ISOLATORS. THIS GENERATOR IS TO REPLACE THE EXISTING. CONNECT FUEL LINES TO THE EXISTING FROM THE FACILITIES EXISTING 2000 DIESEL TANK.
3. 800 AMPS, 480 VOLTS, 3 POLES AUTOMATIC TRANSFER SWITCH, WITH NEUTRAL AND GROUND BAR, IN NEMA 4X STAINLESS STEEL ENCLOSURE, WALL SURFACE MOUNTED. EQUIPMENT TO BE UL 1008 LISTED/CERTIFIED. WITH GENERATOR TIME DELAY FOR EMERGENCY TO NORMAL COOL OFF AND CLOCK EXERCISER. THIS ATS IS TO REPLACE THE EXISTING. PROVIDE AT LOAD SIDE TERMINAL A 200KA TRANSIENT VOLTAGE SURGE SUPPRESSOR.
4. 800A BARS, 50KAIC MIN., 480V, 3ø/3W, PANELBOARD WITH 800A MAIN CIRCUIT BREAKER. NEMA 12 SURFACE MOUNTED ENCLOSURE.
5. SAFETY DISCONNECT SWITCH, AS PER THE SAFETY SWITCHES SCHEDULE, TO REPLACE THE EXISTING.
6. PUMPS CONTROL PANEL WITH MAIN VARIABLE FREQUENCY DRIVE TYPE STARTER, AND SOFT START TYPE BYPASS STARTER. REFER TO THE CORRESPONDING DIAGRAMS AND DETAILS ON THE CORRESPONDING CONTROL/INSTRUMENTATION DRAWINGS. 400A, 480V, 3ø, 50KAIC MIN.
7. EXISTING 125A, 120/208VOLTS, 3ø/4W PANELBOARD. ADD 100KA TRANSIENT VOLTAGE SURGE SUPPRESSOR.
8. EXISTING 45 KVA, 480-120/208VOLTS, THREE PHASE DRY TYPE TRANSFORMER.
9. EXPLOSION PROOF SEAL (CROUSE HINDS TYPE EYS).

CAMPA, CERRATO, & ASSOC. ENGINEERS, P.S.C.
CONSULTING ELECTRICAL ENGINEERS
#9 Chardon Ave., Suite 201
HATO REY P.R. 00918
email: cmc@campacerrato.com
TEL.: 787-810-9360

COMMONWEALTH OF PUERTO RICO
DEPARTMENT OF NATURAL AND ENVIRONMENTAL RESOURCES
INFRASTRUCTURE PROJECTS DIVISION
THESE DOCUMENTS HAVE BEEN REVIEWED AND APPROVED IN ACCORDANCE WITH THE REQUIREMENTS OF THE CLEAN WATER STATE REVOLVING FUND PROGRAM
11/10/2026 DATE
JAVIER VERDEJO MATOS, PE
CHIEF

30% DELIVERABLE

NO.	REMARKS	DATE	BY	APPV'D.

REVISIONS

AAF ENGINEERING, PSC
425 CARR 693 - PMB 269 - DORADO PR 00646

DESIGN-BUILD OF REHABILITATION OF WASTEWATER PUMP STATIONS-NORTH REGION (CWSRF-SAHFI)
TOA ALTA, PUERTO RICO
CIP NO. 2-00-9005

Autoridad de Acueductos y Alcantarillados
GOBIERNO DE PUERTO RICO

GOVERNMENT OF PUERTO RICO
AQUEDUCT AND SEWER AUTHORITY

SHEET TITLE: **TOA ALTA HEIGHTS PUMPS STATION ELECTRICAL ONE LINE DIAGRAM**

SCALE: AS SHOWN
DRWG NO.: **TAH-E-601**
SHEET NO.: **47** OF **74** SHEETS

DRAFT BY: AAF ENGINEERING, PSC	DATE: SEPT./2026		
DESIGNED BY: AAF ENGINEERING, PSC	DATE: SEPT./2026		
REVISED BY: A.A.F.T.	DATE: SEPT./2026		
SUBMITTED BY: AAF ENGINEERING, PSC	DATE: SEPT./2026		

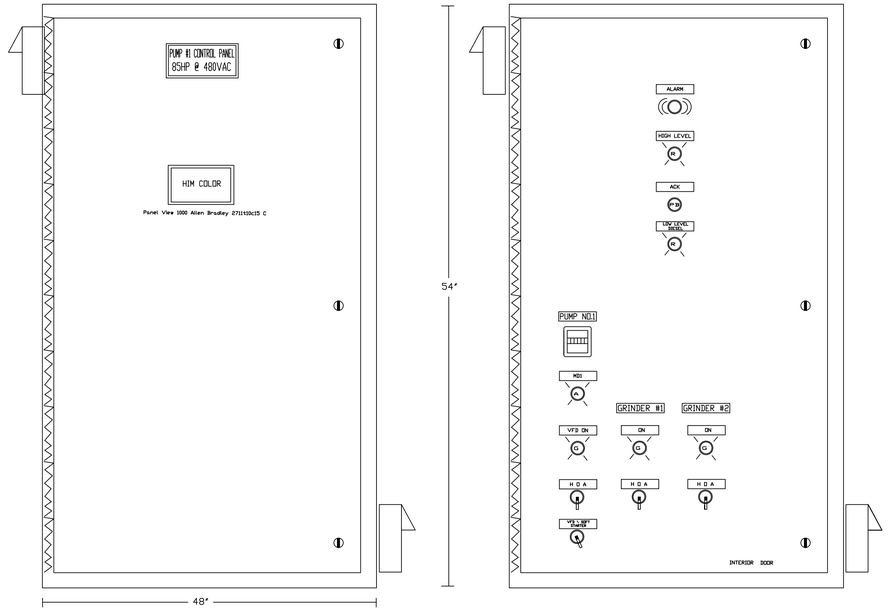

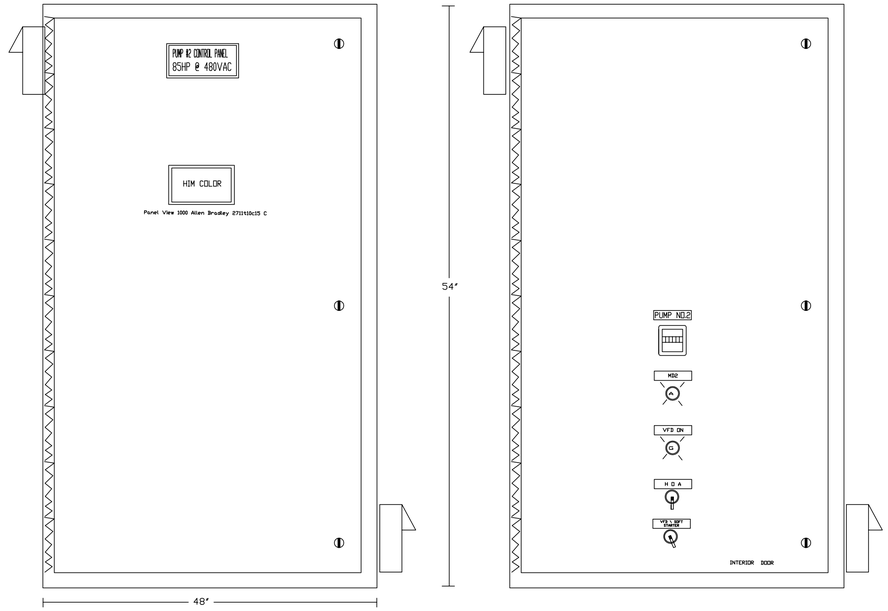

PUMPS CONTROLS PANELS

SCALE: N.T.S.

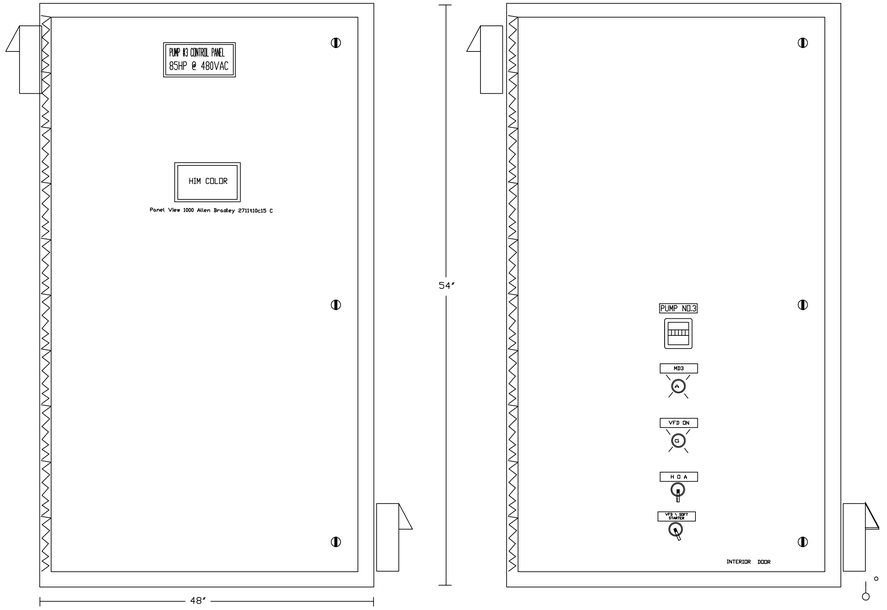

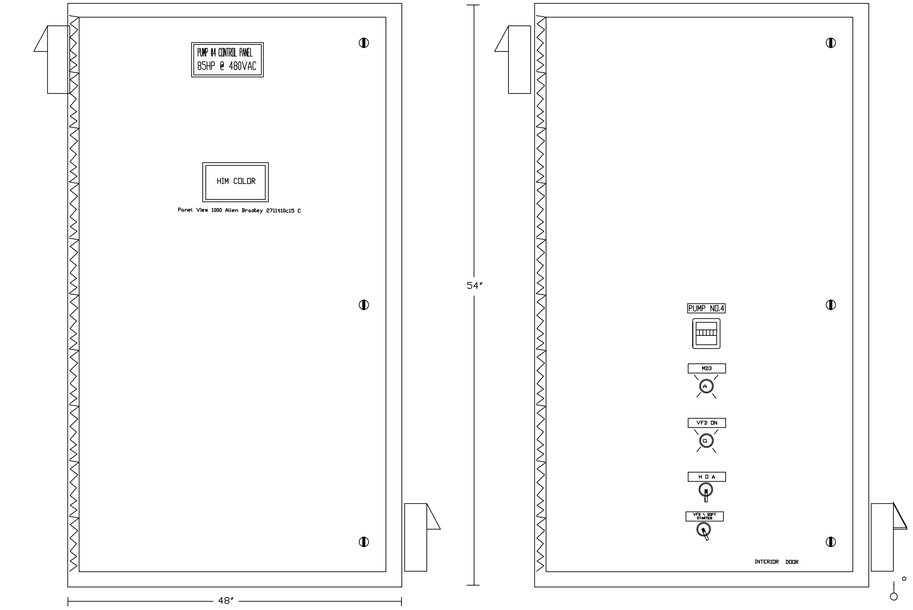

PUMPS CONTROLS PANELS

SCALE: N.T.S.

PUMPS CONTROLS PANELS

SCALE: N.T.S.

COMMONWEALTH OF PUERTO RICO
DEPARTMENT OF NATURAL AND ENVIRONMENTAL RESOURCES
INFRASTRUCTURE PROJECTS DIVISION
THESE DOCUMENTS HAVE BEEN REVIEWED AND
APPROVED IN ACCORDANCE WITH THE REQUIREMENTS
OF THE CLEAN WATER STATE REVOLVING FUND PROGRAM

JAVIER VERARDI MATOS, PE
CHIEF

11/10/2026
DATE

30% DELIVERABLE

NO.	REMARKS	DATE	BY	APPV'D.

REVISIONS

AAF ENGINEERING, PSC
425 CARR 693 - PMB 269 - DORADO PR 00646

DESIGN-BUILD OF REHABILITATION OF WASTEWATER PUMP STATIONS-NORTH REGION (CWSRF-SAHFI)
TOA ALTA, PUERTO RICO
CIP NO. 2-00-9005

Autoridad de Acueductos y Alcantarillados
GOBIERNO DE PUERTO RICO

GOVERNMENT OF PUERTO RICO
AQUEDUCT AND SEWER AUTHORITY

SHEET TITLE:
TOA ALTA HEIGHTS PUMP STATION
MOTOR PUMP CONTROL PANELS & DIAGRAMS

DRAFT BY: AAF ENGINEERING, PSC	DATE SEPT/2026
DESIGNED BY: AAF ENGINEERING, PSC	DATE SEPT/2026
REVISED BY: A.A.F.T.	DATE SEPT/2026
SUBMITTED BY: AAF ENGINEERING, PSC	DATE SEPT/2026

SCALE: NTS
DRWG NO. CP-01
SHEET NO. 48 OF 74 SHEETS
–

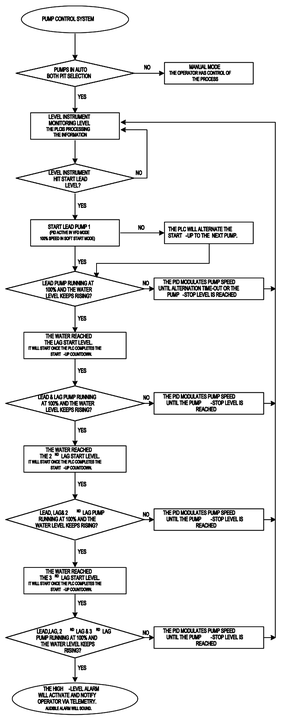

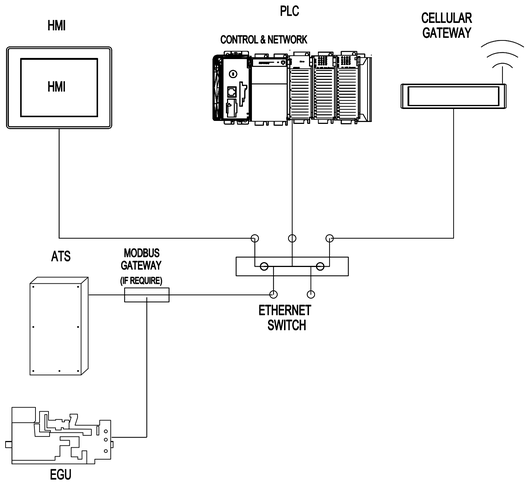

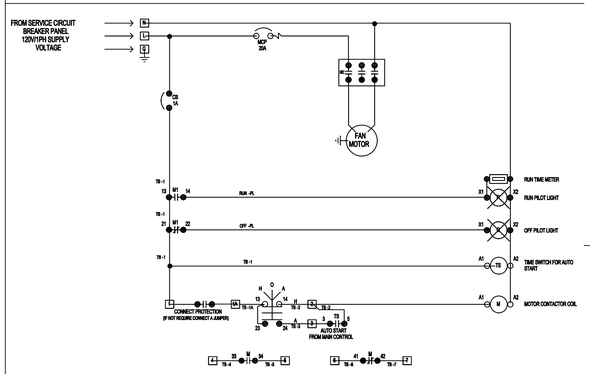

TYPICAL STARTER WIRING DIAGRAM FOR SUPPLY FAN AND EXHAUST FAN

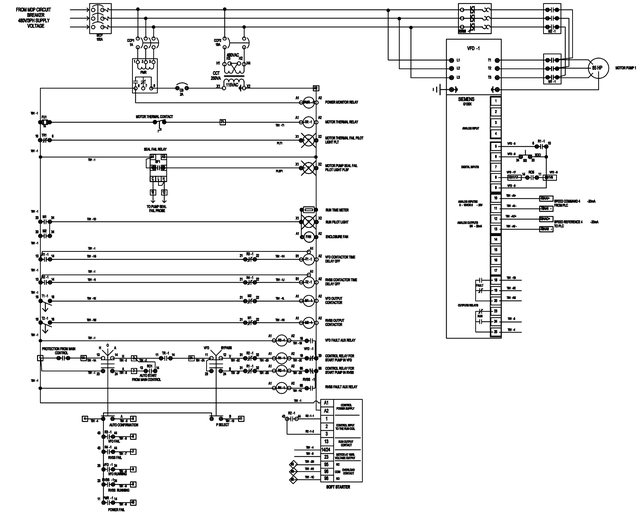

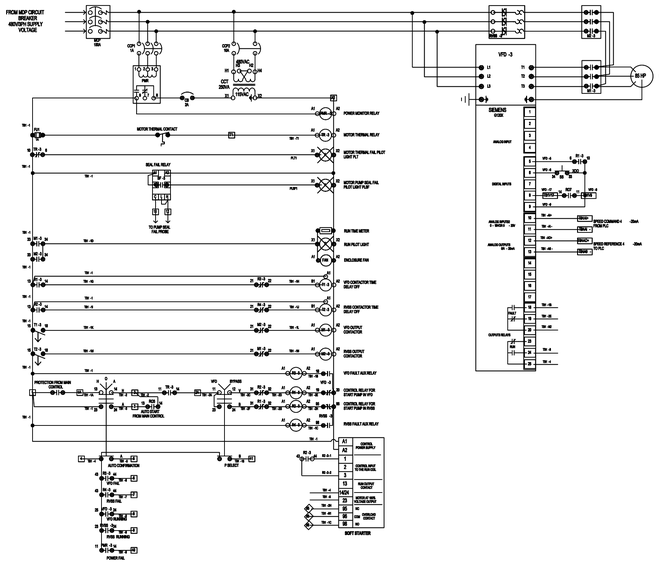

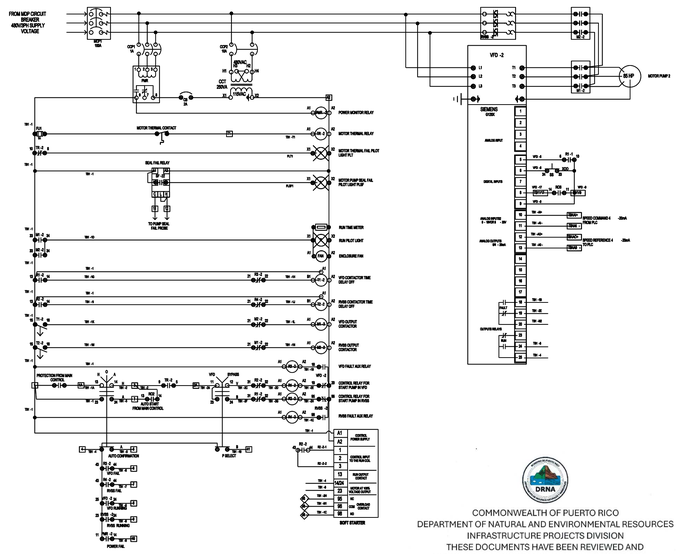

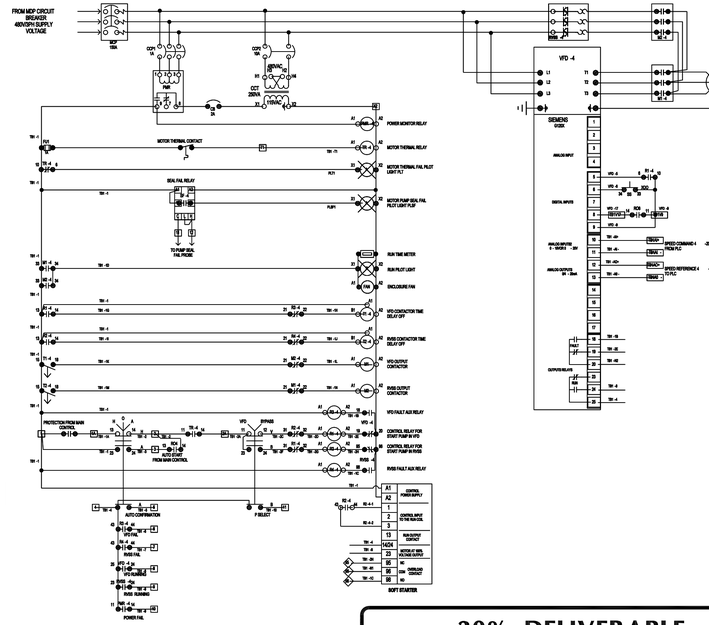

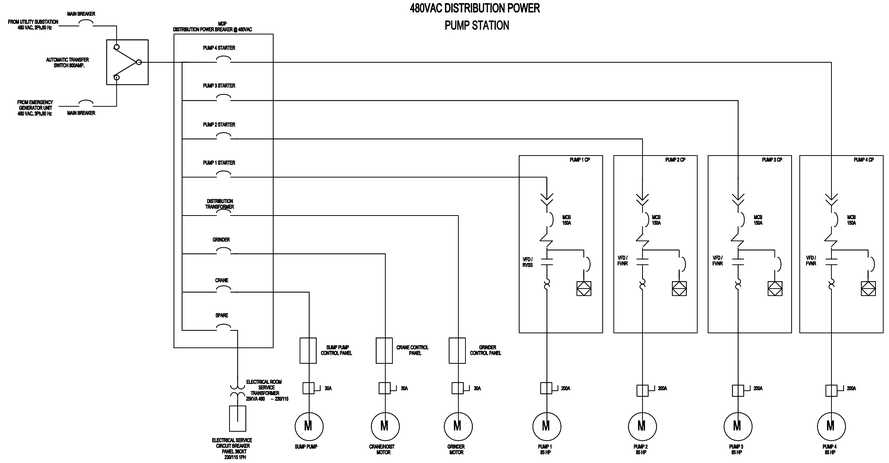

COMMONWEALTH OF PUERTO RICO
DEPARTMENT OF NATURAL AND ENVIRONMENTAL RESOURCES
INFRASTRUCTURE PROJECTS DIVISION
THESE DOCUMENTS HAVE BEEN REVIEWED AND APPROVED IN ACCORDANCE WITH THE REQUIREMENTS OF THE CLEAN WATER STATE REVOLVING FUND PROGRAM

JAVIER VERARDI MATOS, PE
CHIEF

11/10/2026
DATE

30% DELIVERABLE

NO.	REMARKS	DATE	BY	APPV'D.

REVISIONS

AAF ENGINEERING, PSC
425 CARR 693 - PMB 269 - DORADO PR 00646

DESIGN-BUILD OF REHABILITATION OF WASTEWATER PUMP STATIONS-NORTH REGION (CWSRF-SAHFI)
TOA ALTA, PUERTO RICO
CIP NO. 2-00-9005

Autoridad de Acueductos y Alcantarillados
GOBIERNO DE PUERTO RICO

GOVERNMENT OF PUERTO RICO
AQUEDUCT AND SEWER AUTHORITY

SHEET TITLE:
TOA ALTA HEIGHTS PUMP STATION VFD DIAGRAMS

DRAFT BY: AAF ENGINEERING, PSC	DATE SEPT/2026	SCALE: NTS
DESIGNED BY: AAF ENGINEERING, PSC	DATE SEPT/2026	DRWG NO. CP-02
REVISED BY: A.A.F.T.	DATE SEPT/2026	SHEET NO. 49 OF 74 SHEETS
SUBMITTED BY: AAF ENGINEERING, PSC	DATE SEPT/2026	–

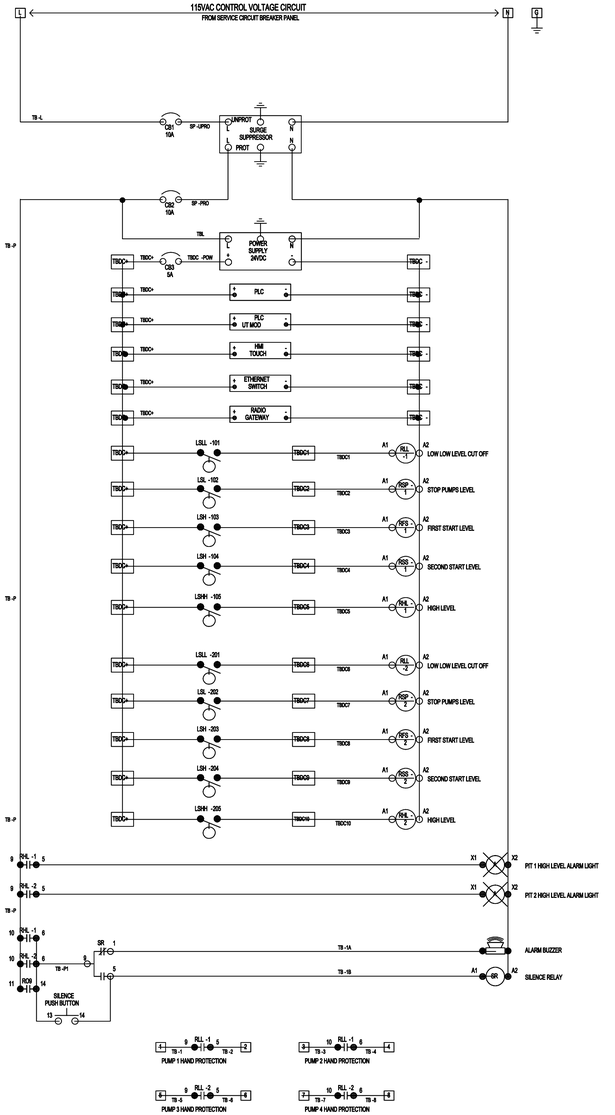

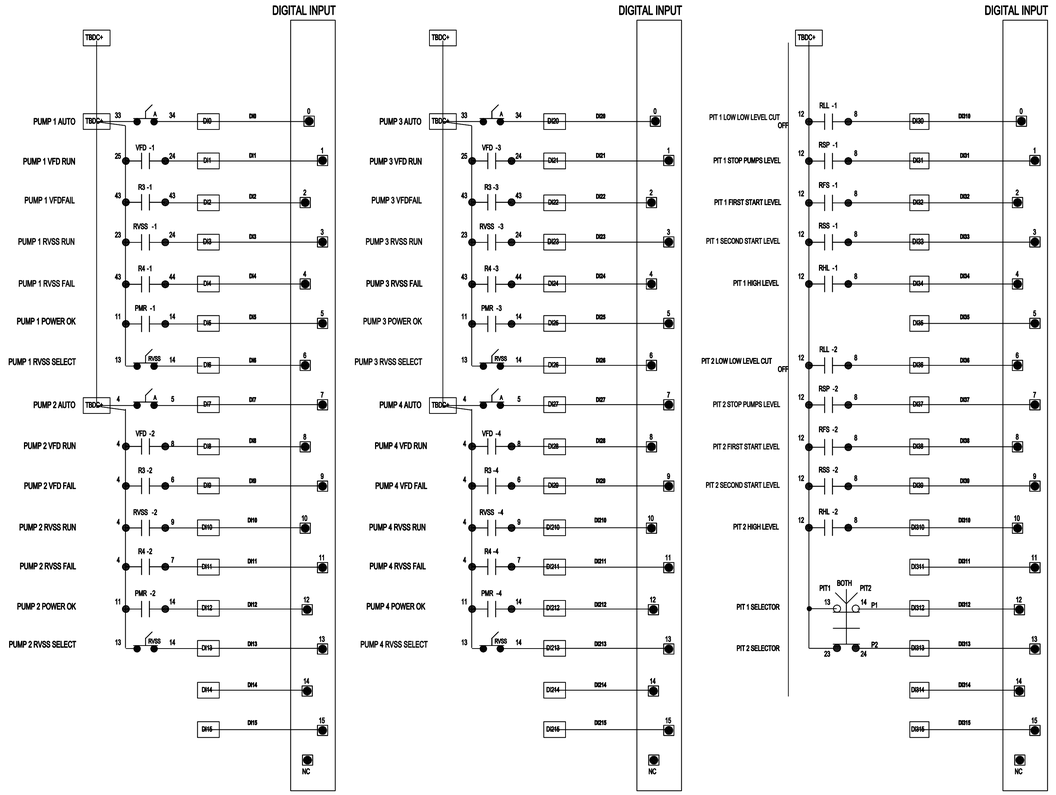

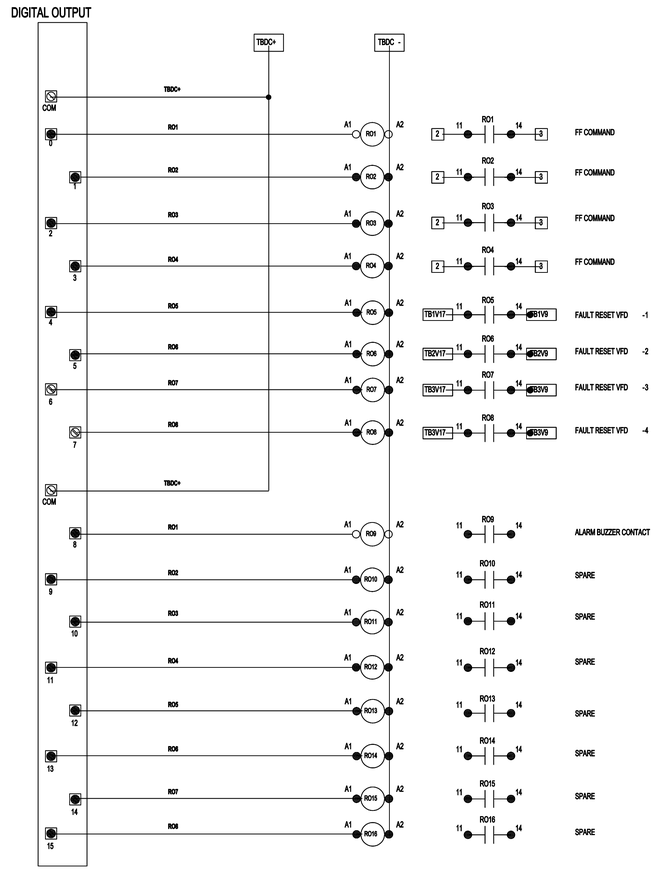

COMMONWEALTH OF PUERTO RICO
DEPARTMENT OF NATURAL AND ENVIRONMENTAL RESOURCES
INFRASTRUCTURE PROJECTS DIVISION
THESE DOCUMENTS HAVE BEEN REVIEWED AND
APPROVED IN ACCORDANCE WITH THE REQUIREMENTS
OF THE CLEAN WATER STATE REVOLVING FUND PROGRAM

JAVIER VERARDI MATOS, PE
CHIEF

11/10/2026
DATE

30% DELIVERABLE

NO.	REMARKS	DATE	BY	APPV'D.

REVISIONS

AAF ENGINEERING, PSC
425 CARR 693 - PMB 269 - DORADO PR 00646

DESIGN-BUILD OF REHABILITATION OF WASTEWATER PUMP STATIONS-NORTH REGION (CWSRF-SAHFI)
TOA ALTA, PUERTO RICO
CIP NO. 2-00-9005

Autoridad de Acueductos y Alcantarillados
GOBIERNO DE PUERTO RICO

GOVERNMENT OF PUERTO RICO
AQUEDUCT AND SEWER AUTHORITY

SHEET TITLE:
TOA ALTA HEIGHTS PUMP STATION MOTOR PUMP CONTROL WIRING DIAGRAM

DRAFT BY: AAF ENGINEERING, PSC	DATE: SEPT/2026
DESIGNED BY: AAF ENGINEERING, PSC	DATE: SEPT/2026
REVISED BY: A.A.F.T.	DATE: SEPT/2026
SUBMITTED BY: AAF ENGINEERING, PSC	DATE: SEPT/2026

SCALE: NTS
DRWG NO. CP-03
SHEET NO. 50 OF 74 SHEETS
–

PROCESS INSTRUMENTS

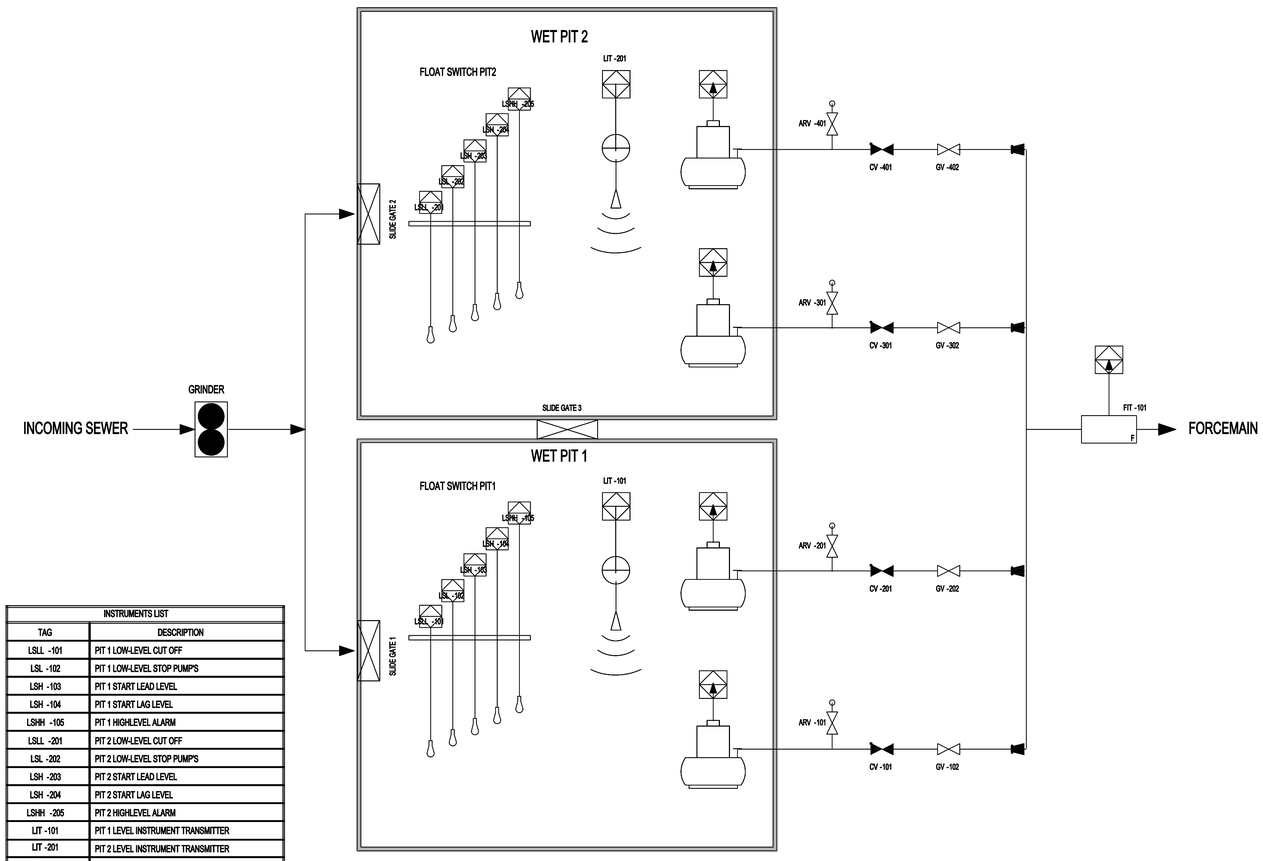

INSTRUMENTS LIST	
TAG	DESCRIPTION
LSLL -101	PIT 1 LOW-LEVEL CUT OFF
LSL -102	PIT 1 LOW-LEVEL STOP PUMP'S
LSH -103	PIT 1 START LEAD LEVEL
LSH -104	PIT 1 START LAG LEVEL
LSHH -105	PIT 1 HIGHLEVEL ALARM
LSLL -201	PIT 2 LOW-LEVEL CUT OFF
LSL -202	PIT 2 LOW-LEVEL STOP PUMP'S
LSH -203	PIT 2 START LEAD LEVEL
LSH -204	PIT 2 START LAG LEVEL
LSHH -205	PIT 2 HIGHLEVEL ALARM
LIT -101	PIT 1 LEVEL INSTRUMENT TRANSMITTER
LIT -201	PIT 2 LEVEL INSTRUMENT TRANSMITTER
FIT -101	FLOW INSTRUMENT TRANSMITTER

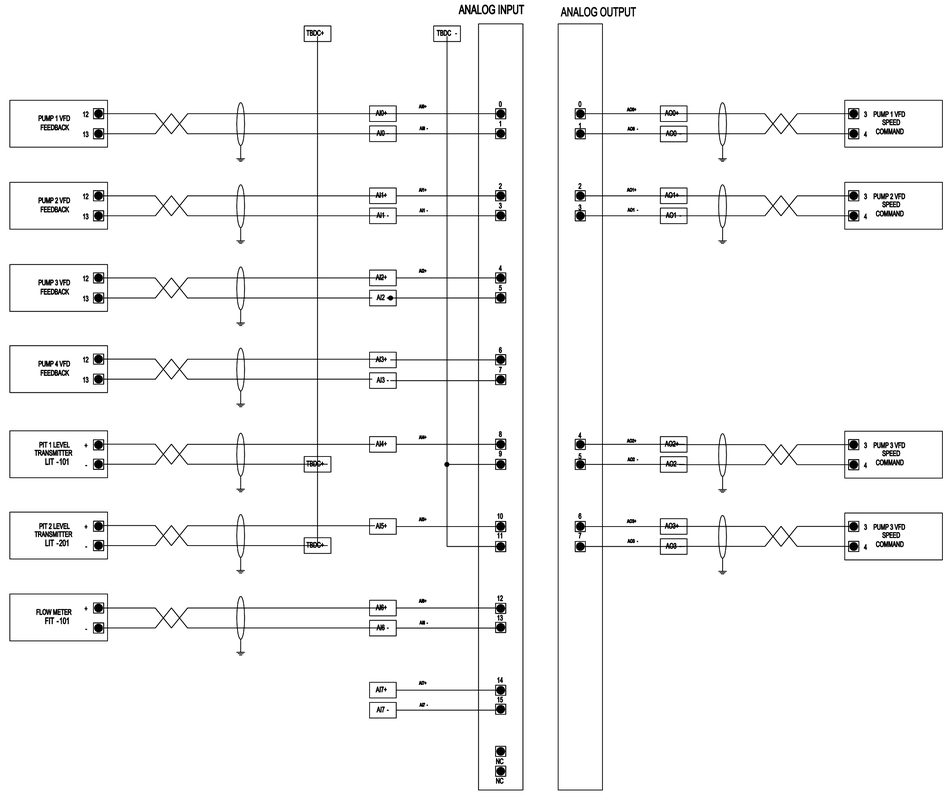

COMMONWEALTH OF PUERTO RICO
DEPARTMENT OF NATURAL AND ENVIRONMENTAL RESOURCES
INFRASTRUCTURE PROJECTS DIVISION
THESE DOCUMENTS HAVE BEEN REVIEWED AND
APPROVED IN ACCORDANCE WITH THE REQUIREMENTS
OF THE CLEAN WATER STATE REVOLVING FUND PROGRAM

JAVIER VERARDI MATOS, PE
CHIEF

11/10/2026
DATE

30% DELIVERABLE

NO.	REMARKS	DATE	BY	APPV'D.

REVISIONS

AAF ENGINEERING, PSC
425 CARR 693 - PMB 269 - DORADO PR 00646

DESIGN-BUILD OF REHABILITATION OF WASTEWATER PUMP STATIONS-NORTH REGION (CWSRF-SAHFI)
TOA ALTA, PUERTO RICO
CIP NO. 2-00-9005

Autoridad de Acueductos y Alcantarillados
GOBIERNO DE PUERTO RICO

GOVERNMENT OF PUERTO RICO
AQUEDUCT AND SEWER AUTHORITY

SHEET TITLE:
TOA ALTA HEIGHTS PUMP STATION
PROCESS & INSTRUMENTATION DIAGRAM (P&ID)

DRAFT BY: AAF ENGINEERING, PSC	DATE SEPT/2026
DESIGNED BY: AAF ENGINEERING, PSC	DATE SEPT/2026
REVISED BY: A.A.F.T.	DATE SEPT/2026
SUBMITTED BY: AAF ENGINEERING, PSC	DATE SEPT/2026

SCALE: NTS
DRWG NO. P&ID-01
SHEET NO. 51 OF 74 SHEETS
–

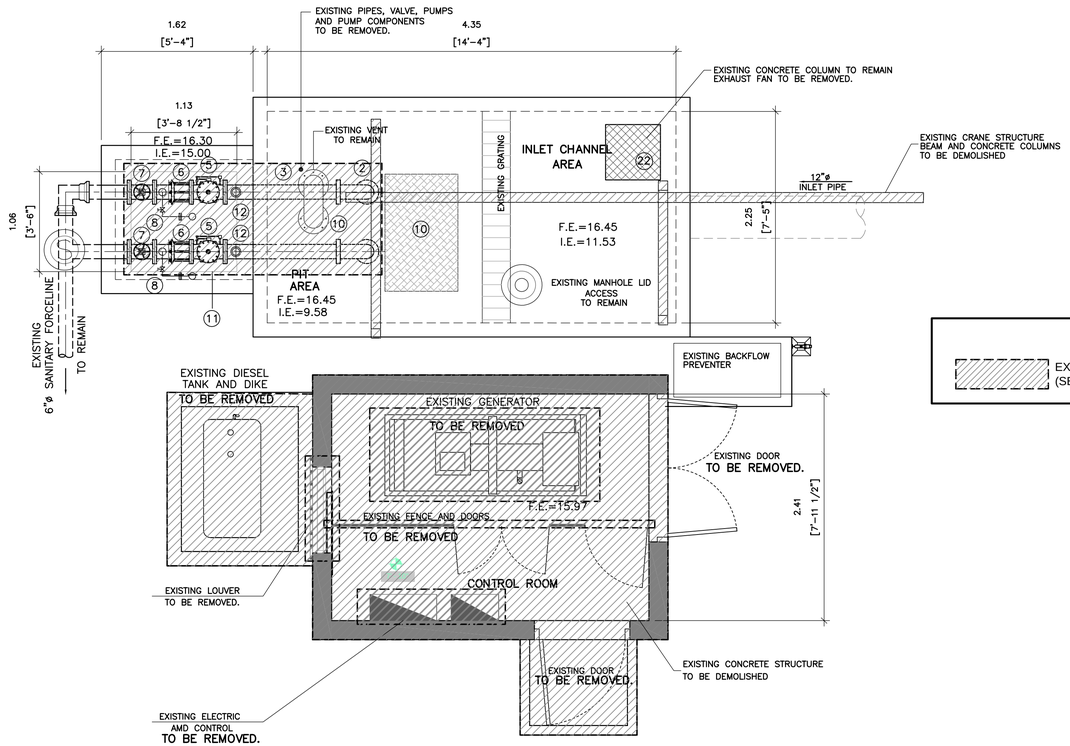

N

PUMP STATION GROUND LEVEL FLOOR PLAN

SCALE: 1:30

EXISTING MECHANICAL PARTS TO BE REMOVED (SEE GENERAL DEMOLITION NOTES)

LEGEND & SYMBOLS

- ELEVATION SHEET REFERENCE (1 / PS-00)
- BLOW-UP OR DETAIL REFERENCE (B / D-2.0)
- SECTION SHEET REFERENCE (A / PS-00)
- NEW CONCRETE OR CMU BLOCK WALL
- WALLS OR AREAS TO BE DEMOLISHED
- CENTER LINE
- DOOR TAG (A)
- EXISTING HOSE BIBB
- (1) WINDOW TAG
- [2] FINISH TAG
- 6'-6" DESIGNATED HEIGHT F.F.L.
- F.E.=16.44 FLOOR ELEVATION
- .15 FLOOR ELEVATION DIFFERENCE
- (12A) EQUIPMENT TAG OR PUMP STATION COMPONENTS
- L2 LIGHTING TAG
- SLOPE ON SURFACE
- N NORTH REFERENCE

EXISTING EQUIPMENT OR PUMP STATION COMPONENTS – TO BE REMOVED

(1) EXISTING PUMPS TO BE REMOVED.
(2) 6"ø D.I. 90° L.R. ELBOW, FL. ENDS TO BE REMOVED.
(3) 6" ø D.I. NIPPLE FL. ENDS. TO BE REMOVED.
(4) INTENTIONALLY OMITTED
(5) 6"ø CHECK VALVE FL. ENDS TO BE REMOVED.
(6) 6" FLANGED COUPLING ADAPTER TO BE REMOVED.
(7) 6" VALVE FL. ENDS TO BE REMOVED.
(8) PRESSURE GAUGE TO BE REMOVED.
(10) ACCESS HATCH – TO BE REMOVED.
(11) ACCESS HATCH – TO BE REMOVED.
(13) POWER CABLES HOLDER ASSEMBLY TO BE REMOVED.
(14) S.S LIFTING CHAIN TO BE REMOVED.
(15) PUMP POWER CABLES TO BE REMOVED.
(16) STAINLESS STEEL 316 PUMPS GUIDE BAR TO BE REMOVED.
(17) S.S. 316 SAFETY CHAIN HOOK ASSEMBLY TO BE REMOVED.
(19) LIQUID LEVEL SENSOR TO BE REMOVED.
(22) ROOF EXHAUST FAN TO BE REMOVED.

AREA OF ITEMS TO BE REMOVED

COMMONWEALTH OF PUERTO RICO
DEPARTMENT OF NATURAL AND ENVIRONMENTAL RESOURCES
INFRASTRUCTURE PROJECTS DIVISION
THESE DOCUMENTS HAVE BEEN REVIEWED AND APPROVED IN ACCORDANCE WITH THE REQUIREMENTS OF THE CLEAN WATER STATE REVOLVING FUND PROGRAM

JAVIER VERARDI MATOS, PE
CHIEF

11/10/2026
DATE

GENERAL DEMOLITION NOTES:

1– THE CONSTRUCTION (DEMOLITION) SITE SHALL BE MAINTAINED NEAT AND CLEAN FREE FROM ACCUMULATION OF TRASH AND DEBRIS, REMOVE ALL TRASH, DEBRIS, RUBBISH ETC. FROM SITE AND DISPOSED OF IT IN ON A DAILY BASIS. AS PER BY APPLICABLE REGULATIONS.

2– DEMOLITION AND REMOVAL OF RUBBISH SHALL BE CONDUCTED IN A MANNER THAT ELIMINATES HAZARDS TO PERSON AND PROPERTY, AND SHALL PREVENT THE RELEASE OF DUST INTO THE AIR, SEE SPECIFICATION SECTION 02D005, AND THE GENERAL CONSOLIDATED PERMIT.

3– GENERAL CONTRACTOR SHALL COORDINATE WITH SUB CONTRACTORS OR RESPONSIBLE PARTIES FOR DEMOLITION WORK UNDER FLOOR SLABS FOR RUNS RELATED TO PLUMBING, MECHANICAL OR ELECTRICAL SYSTEMS, REFER RESPECTIVELY TO DRAWINGS OF EACH DISCIPLINE FOR LOCATION OF SAID RUNS, REQUIRED FOR PROPER INSTALLATION OF THESE SYSTEMS.

4– CONTRACTOR SHALL BE RESPONSIBLE FOR ANY DAMAGES INFLICTED TO ADJACENT PROPERTY OR OTHER AREAS DURING THE DEMOLITION PROCESS. DAMAGE ITEMS SHALL BE RESTORED TO ITS ORIGINAL CONDITION AT THE CONTRACTOR'S EXPENSE.

5– GENERAL CONTRACTOR SHALL FIELD VERIFY EXISTING CONDITIONS. DEMOLITION RESPONSIBILITIES ARE NOT NECESSARILY LIMITED TO THOSE PORTRAYED IN DEMOLITION PLAN.

6– DEMOLITION WORK INCLUDES REMOVAL AND DISPOSAL OF ALL RUBBISH AND TRASH RESULTING FROM DEMOLITION WORK, AND SHALL BE EXECUTED IN CONFORMANCE WITH ALL, STATE AND FEDERAL REGULATIONS AS SET FORTH BY ALL GOVERNING AUTHORITIES.

7– CONTRACTOR SHALL IMMEDIATELY NOTIFY THE OWNER IF ANY WORK INDICATED IN THE CONTRACT DOCUMENTS CANNOT BE PERFORMED DUE TO EXISTING FIELD CONDITIONS.

8– CONTRACTOR SHALL VERIFY LOCATION AND CURRENT USE OF ALL UTILITIES WITHIN THE PREMISES. ALL SURFACE OR ABOVE GROUND UTILITIES NOT IN USE OR LABELED TO REMAIN IN CONSTRUCTION DOCUMENTS SHALL BE REMOVED AND DISPOSED OF, ALL UNDERGROUND UTILITIES SHALL BE CAPPED OR SEALED, BURIED, AND DOCUMENTED FOR FUTURE REFERENCE.

9– THE DISPOSAL OF THE DEMOLISHED MATERIALS SHALL BE COORDINATED WITH P.R.A.S.A. PERSONNEL AT THE CONTRACTOR COST.

10– REMOVE EXISTING ELECTRICAL AND MECHANICAL TO BE RETURNED TO P.R.A.S.A. BEFORE STARTING DEMOLITION ACTIVITIES.

11– REMOVE ALL PUMPING FIXTURES INCLUDING EXPOSED PIPING. TAP SERVICES AS REQUIRED.

12– REMOVE ALL ABANDONED ELECTRICAL EQUIPMENT, CONDUITS, FIRE PROTECTION EQUIPMENT, PIPING AND A/C EQUIPMENT.

13– ALL DEMOLITION WORK SHALL BE COORDINATE WITH P.R.A.S.A.

14–EVERYTHING NOT USABLE TO BE DEMOLISHED MUST BE REMOVED FROM THE PROPERTY AS PER APPLICABLE REGULATIONS.

15–THE CONTRACTOR IS RESPONSIBLE TO FIELD VERIFY ALL POSSIBLE DEMOLITION WORK PRIOR TO BIDDING THE PROJECT.

16–ITEMS TO BE ELIMINATED (PIPES, ETC.) MUST BE REMOVED FROM THE PROPERTY.

17–THE CONTRACTOR MUST SUBMIT TO THE PROJECT SUPERVISOR A DEMOLITION PLAN AND SEQUENCE SCHEDULE. THE SCHEDULE MUST BE APPROVED BEFORE THE CONTRACTOR CAN BEGIN ANY DEMOLITION WORK.

18–THE PUMP STATIONS, ALL PROCESS UNITS, STRUCTURES AND MANHOLES SHOULD BE DEMOLISHED 3 FEET BELOW EXISTING GROUND. THE UNDERGROUND PITS SHOULD BE FILLED AND COMPACTED WITH A–2–4 MATERIAL TO BE APPROVED BY THE GEOTECHNICAL ENGINEER. ONCE THE FLOOR SLAB & WALLS ARE DEMOLISHED THE UNDERGROUND PITS ARE FILLED WITH A–2–4 COMPACTED MATERIAL GRADED TO PROVIDE THE FLOW OF WATER TO DRAIN TO THE PROPERTY LIMIT. PUMP STATIONS SHALL BE DEMOLISHED ONCE THE NEW SANITARY TRUNK SEWER IS IN SERVICE AND THE EXISTING SANITARY SYSTEM CONNECTED TO THE NEW SANITARY TRUNK SEWER.

19–EXISTING EQUIPMENT (PUMPS AND GENERATOR ETC.) TO BE REMOVED MUST BE TAKEN (BY THE CONTRACTOR) TO PRASA'S STORAGE FACILITY. THE CONTRACTOR MUST VERIFY WITH PRASA'S PROJECT ENGINEER WHICH PARTS ARE TO BE STORED AND WHICH ARE TO BE DISPOSED OF.

20–TO PREVENT ANY WASTEWATER OVERFLOW OR SPILLS, THE CONTRACTOR SHALL CONSIDER A TEMPORARY SUBMERSIBLE PUMP IN THE FIRST MANHOLE FOR THE CONNECTION THE EXISTING SANITARY SEWER TO THE NEW SYSTEM.

21–THE CONTRACTOR WILL SUMMIT DETAILS OF THE TEMPORARY SYSTEM, IF NECESSARY, TO DEVIATES THE FLOW OF THE EXISTING SANITARY SEWER. THIS METHOD SHOULD BE APPROVED BY "PROYECTOS PUBLICOS Y PRIVADOS".

22–THE FILL MATERIAL OBTAINED FROM THE DEMOLITION SHALL BE CLEARED OF ANY STEEL, DEMOLISHED TO A MAXIMUM OF 2 INCHES AND USED AS FILL MATERIAL.

23–SEE LEAD BASED PAINTS AND ASBESTOS CONTAINING MATERIALS (ACM) NO PRESENCE CERTIFICATIONS ON THIS DWG.

24–DEMOLITION SHOULD BE IN COMPLIANCE WITH ALL OSHA STANDARDS. SEE 29 CFR 1926 SUBPART T; 29CFR 1926.850 (a)

25–DURING DEMOLITION WORKS, DUST CONTROL AND SILICA CONTROL EXPOSURE MEASUREMENTS MUST BE IMPLEMENTED.

30% DESIGN NOTES:

1. NOT ISSUED FOR CONSTRUCTION. THE PRESENTED LAYOUTS ARE FOR REFERENCE ONLY.
2. ALL SHOWN ELEVATIONS ARE FOR REFERENCE ONLY. DESIGNBUILDER IS RESPONSIBLE TO VERIFY AND CONFIRM ALL ELEVATIONS.
3. THE DESIGN–BUILDER IS RESPONSIBLE OF EVALUATING ALL POSSIBLE ALTERNATIVES AND PROVIDING THE MOST FEASIBLE SOLUTION BASED ON THEIR TECHNICAL ANALYSIS AND PROFESSIONAL JUDGMENT.
4. THE DESIGN–BUILDER IS RESPONSIBLE TO PROVIDE A DESIGN THAT COMPLIES WITH APPLICABLE REGULATION AND REQUIREMENTS INCLUDING BUT NOT LIMITED TO THE ADVISORY BASE FLOOD ELEVATION (ABFE) BY FEMA AND THE PUERTO RICO BUILDING CODE.
5. ALL EQUIPMENT TO BE REMOVED SHALL BE DELIVERED BY THE DESIGN–BUILDER TO A DESIGNATED FACILITY, TO BE COORDINATED WITH PRASA PERSONNEL.

30% DELIVERABLE

NO.	REMARKS	DATE	BY	APPV'D.

REVISIONS

AAF ENGINEERING, PSC
425 CARR 693 - PMB 269 - DORADO PR 00646

DESIGN-BUILD OF REHABILITATION OF WASTEWATER PUMP STATIONS-NORTH REGION (CWSRF-SAHFI)
TOA ALTA, PUERTO RICO
CIP NO. 2–00–9005

Autoridad de Acueductos y Alcantarillados
GOBIERNO DE PUERTO RICO

GOVERNMENT OF PUERTO RICO
AQUEDUCT AND SEWER AUTHORITY

SHEET TITLE: **JARDINES DE TOA ALTA PUMP STATION DEMOLITION PLAN**

DRAFT BY: AAF ENGINEERING, PSC	DATE: SEPT/2026
DESIGNED BY: AAF ENGINEERING, PSC	DATE: SEPT/2026
REVISED BY: A.A.F.T.	DATE: SEPT/2026
SUBMITTED BY: AAF ENGINEERING, PSC	DATE: SEPT/2026

SCALE: H=1:30
DRWG NO. JTA–DP–01
SHEET NO. 52 OF 74 SHEETS
–

EXISTING SANITARY JARDINES DE TOA ALTA PUMP STATION
TO BE REHABILITATED
SEE DETAILS ON DWG. JTA–PS–03

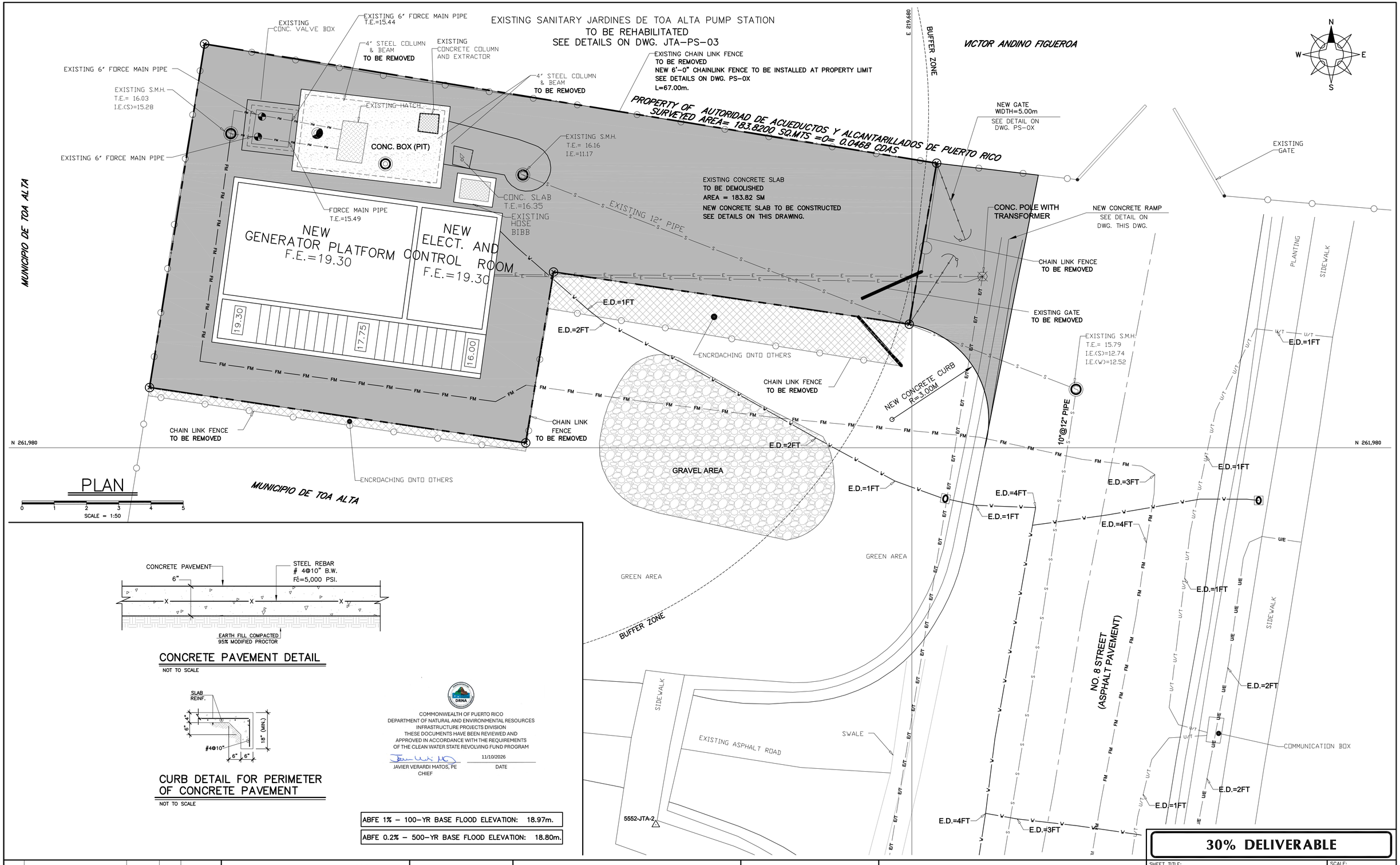

PLAN

SCALE = 1:50

CONCRETE PAVEMENT DETAIL

NOT TO SCALE

CURB DETAIL FOR PERIMETER OF CONCRETE PAVEMENT

NOT TO SCALE

COMMONWEALTH OF PUERTO RICO
DEPARTMENT OF NATURAL AND ENVIRONMENTAL RESOURCES
INFRASTRUCTURE PROJECTS DIVISION
THESE DOCUMENTS HAVE BEEN REVIEWED AND
APPROVED IN ACCORDANCE WITH THE REQUIREMENTS
OF THE CLEAN WATER STATE REVOLVING FUND PROGRAM

JAVIER VERARDI MATOS, PE
CHIEF

11/10/2026
DATE

ABFE 1% – 100–YR BASE FLOOD ELEVATION: 18.97m.

ABFE 0.2% – 500–YR BASE FLOOD ELEVATION: 18.80m.

30% DELIVERABLE

NO.	REMARKS	DATE	BY	APPV'D.

REVISIONS

AAF ENGINEERING, PSC
425 CARR 693 - PMB 269 - DORADO PR 00646

DESIGN-BUILD OF REHABILITATION OF WASTEWATER PUMP STATIONS-NORTH REGION (CWSRF-SAHFI)
TOA ALTA, PUERTO RICO
CIP NO. 2–00–9005

Autoridad de Acueductos y Alcantarillados
GOBIERNO DE PUERTO RICO

GOVERNMENT OF PUERTO RICO
AQUEDUCT AND SEWER AUTHORITY

SHEET TITLE: **JARDINES DE TOA ALTA PUMP STATION SITE PLAN**

SCALE: H=1:50 V=1:50

DRWG NO. JTA–PS–01

DRAFT BY: AAF ENGINEERING, PSC	DATE: SEPT/2026
DESIGNED BY: AAF ENGINEERING, PSC	DATE: SEPT/2026
REVISED BY: A.A.F.T.	DATE: SEPT/2026
SUBMITTED BY: AAF ENGINEERING, PSC	DATE: SEPT/2026

SHEET NO. 53 OF 74 SHEETS

–

JARDINES TOA ALTA PUMP STATION

NUMBER OF UNITS	500	
Q = 500 x 198 =	99200	
(infiltration) 500 x 75 =	37500	
Q = Qave x 2.5 =	285500	GPD
	198	GPM
DESIGN FLOW	200	GPM

Qavg.
99200 GPD
69 GPM

Existing 6" pipe		
MAX. LEVEL	27.00	
MIN. WATER	9.90	
DIF. LEVEL	17.10	
LOSSES	4.28	
FITTINGS 4"	0.20	
	21.57	m
TDH =	70.8	ft
TDH	71	ft

Fitting losses

HL = k v2 / 2g

Fitting	
90° elbow	
45° elbow	
Gate Valve	
Check Valve (swing)	
Sk =	

Existing 6" PIPE

C = 100

GPM	S	LE(m)	HF	STATIC(m)	V (fps)	FITTINGS 4" (m)	TDH(m)	TDH(ft)
50	0.470	700	0.329	17.1	0.57	0.01	17.44	57.22
100	1.695	700	1.186	17.1	1.14	0.05	18.34	60.15
150	3.588	700	2.512	17.1	1.70	0.11	19.72	64.70
200	***6.109***	***700***	***4.277***	***17.1***	***2.27***	***0.20***	***21.57***	***70.77***
250	9.232	700	6.462	17.1	2.84	0.31	23.87	78.30
300	12.935	700	9.055	17.1	3.41	0.44	26.59	87.25
400	22.025	700	15.417	17.1	4.54	0.78	33.30	109.24
500	33.281	700	23.297	17.1	5.68	1.22	41.62	136.54
600	46.631	700	32.642	17.1	6.81	1.76	51.50	168.96

SEGMENT (1)

New 6" pipe		
	GPD	GPM
Q =	288,000	200
D =	6	in
C =	100	
V =	2.27	fps
L =	641	m
LE =	700	m
S =	6.109	
HF =	4.277	m

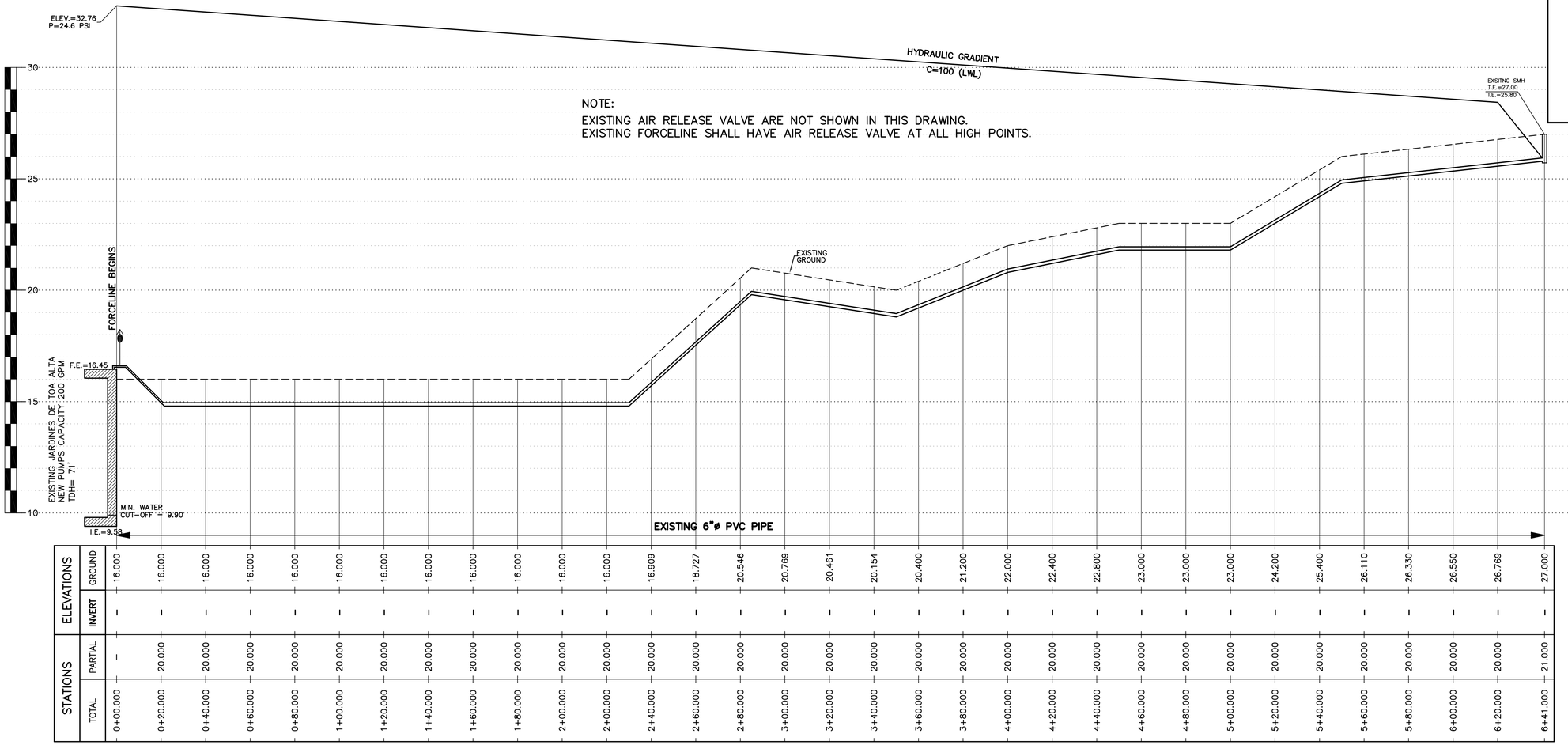

HYDRAULIC PROFILE 6"ø PVC PIPE DR-14 FROM JARDINES DE TOA ALTA PUMPING STATION TO EXISTING MH

SCALES: HORIZONTAL=1:1,000 VERTICAL=1:100

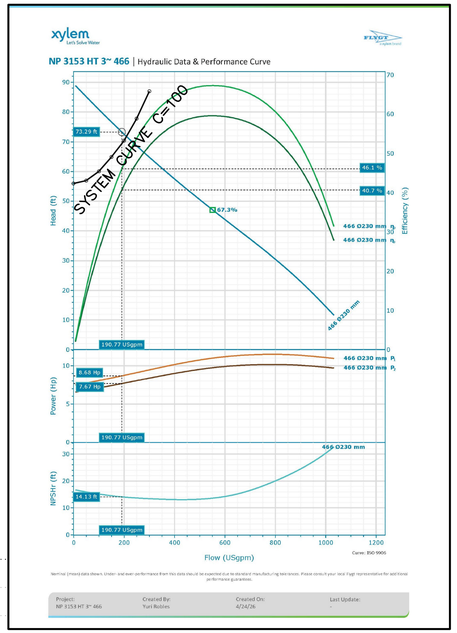

PUMPS: FLYGT MODEL NP 3153 HT 3 466 CHOPPER TO PROVIDE 200 GPM. AGAINST A TOTAL OF 71 FEET WITH A 15 H.P. 3 PHASE 460 VOLTAGE, MOTOR 1,765RPM IMP. 230mm DIA. IN, EFF.=46%
TWO PUMPS WILL BE INSTALLED – BHP = 7.5HP

COMMONWEALTH OF PUERTO RICO
DEPARTMENT OF NATURAL AND ENVIRONMENTAL RESOURCES
INFRASTRUCTURE PROJECTS DIVISION
THESE DOCUMENTS HAVE BEEN REVIEWED AND
APPROVED IN ACCORDANCE WITH THE REQUIREMENTS
OF THE CLEAN WATER STATE REVOLVING FUND PROGRAM

JAVIER VERARDI MATOS, PE
CHIEF

11/10/2026
DATE

30% DELIVERABLE

NO.	REMARKS	DATE	BY	APPV'D.
REVISIONS				

AAF ENGINEERING, PSC
425 CARR 693 - PMB 269 - DORADO PR 00646

DESIGN-BUILD OF REHABILITATION OF WASTEWATER PUMP STATIONS-NORTH REGION (CWSRF-SAHFI)
TOA ALTA, PUERTO RICO
CIP NO. 2-00-9005

Autoridad de Acueductos y Alcantarillados
GOBIERNO DE PUERTO RICO

GOVERNMENT OF PUERTO RICO
AQUEDUCT AND SEWER AUTHORITY

SHEET TITLE: JARDINES DE TOA ALTA PUMP STATION HYDRAULIC PROFILE	SCALE: H=1:1,000 V=1:100
DRAFT BY: AAF ENGINEERING, PSC / DATE: SEPT/2026	DRWG NO. JTA-PS-02
DESIGNED BY: AAF ENGINEERING, PSC / DATE: SEPT/2026	SHEET NO. 54 OF 74 SHEETS
REVISED BY: A.A.F.T. / DATE: SEPT/2026	
SUBMITTED BY: AAF ENGINEERING, PSC / DATE: SEPT/2026	–

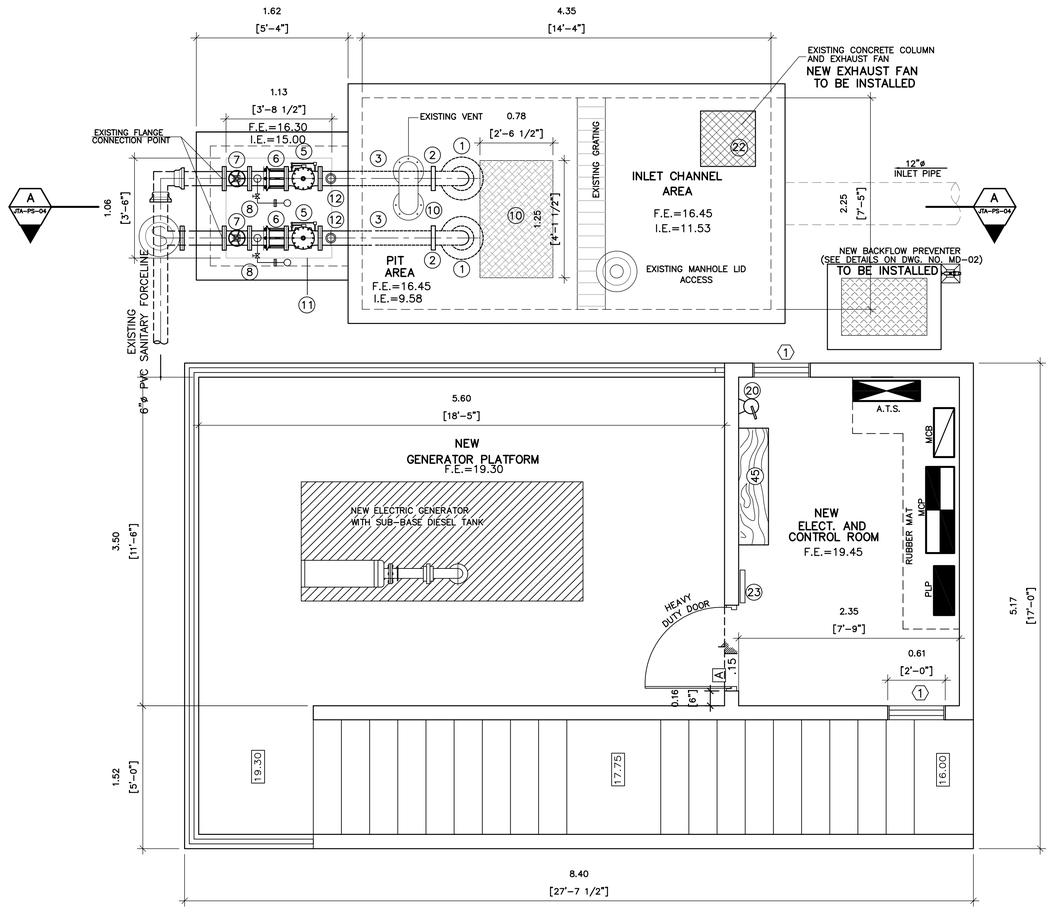

N

PUMP STATION GROUND LEVEL FLOOR PLAN

SCALE: 1:30

IMPORTANT NOTES

1- ABFE 1% – 100-YR BASE FLOOD ELEVATION: 18.87m.
ABFE 0.2% – 500-YR BASE FLOOD ELEVATION: 21.38m.
2- INSTALLATION OF PUMPS AS PER MANUFACTURER SPECIFICATION.
3- ALL PUMPS SHALL BE PROVIDED WITH MIX SLUDGE VALVE MODEL 4901 BY FLYGT OR APPROVED EQUAL.
4- ALL STAINLESS STEEL PARTS TO BE USED IN THE STATION SHALL BE A-316.
5- WHEN MECHANICAL HANDLING EQUIPMENT IS IN USE SUFFICIENT SAFE CLEARANCES SHALL BE ALLOWED IN AISLES, AT LOAD DOCKS, THROUGH DOOR WAYS AND WHICHEVER IS NEEDED, O.S.H.A. (29 CFR 1910.22)
6- VALVES ASSEMBLIES INDICATED IN SECTION 15100.
7- FOR DOOR AND WINDOWS SCHEDULE SEE DWG. MD-01.
8- ALL EXISTING AND NEW PIPES TO BE PAINTED. SEE SPECS. SECTION 099100
9- PROVIDE PUMPS SPARE PARTS.

JARDINES DE TOA ALTA – IMPROVEMENTS:

PUMP STATION BUILDING:

PRESSURE CLEANING OUTSIDE AND INSIDE

PAINTING AND ROOF SEALING.

CLEAN AND PAINT THE WALLS OF THE STRUCTURE INSIDE AND OUTSIDE.

REPLACE WINDOWS.

STRUCTURAL

WET PIT – REPAIR DETERIORATED CONCRETE SURFACES

MECHANICAL PUMPS & ACCESSORIES:

DEMOLISH CRANE STRUCTURE

REPLACE FLOATS.

REPLACE PUMPS.

REPLACE GUIDE RAILS PIPING

REPLACE INSIDE PIT PIPES AND VALVES

NEW PUMP ACCESS HATCHES.

REPLACE VALVES

REPLACE EXHAUST FAN

REPLACE BACKFLOW PREVENTER

ELECTRICAL POWER DISTRIBUTION:

NEW UNDERGROUND MAIN FEEDER

NEW CONTROL PANEL

NEW EGU TO THE OUTSIDE OF THE BUILDING.
NEW AUTOMATIC TRANSFER SWITCH (ATS)
NEW DIESEL TANK DOUBLE WALL CONTAINMENT FOR 24 HOURS, 7 DAYS.

LIGHTING:

NEW THE ILLUMINATION SYSTEM

NEW LED ILLUMINATION – THREE WALL PACKS FOR THE EXTERIOR.

30% DESIGN NOTES:

1. NOT ISSUED FOR CONSTRUCTION. THE PRESENTED LAYOUTS ARE FOR REFERENCE ONLY.
2. ALL SHOWN ELEVATIONS ARE FOR REFERENCE ONLY. DESIGN-BUILDER IS RESPONSIBLE TO VERIFY AND CONFIRM ALL ELEVATIONS.
3. THE DESIGN-BUILDER IS RESPONSIBLE OF EVALUATING ALL POSSIBLE ALTERNATIVES AND PROVIDING THE MOST FEASIBLE SOLUTION BASED ON THEIR TECHNICAL ANALYSIS AND PROFESSIONAL JUDGMENT.
4. THE DESIGN-BUILDER IS RESPONSIBLE TO PROVIDE A DESIGN THAT COMPLIES WITH APPLICABLE REGULATION AND REQUIREMENTS INCLUDING BUT NOT LIMITED TO THE ADVISORY BASE FLOOD ELEVATION (ABFE) BY FEMA AND THE PUERTO RICO BUILDING CODE.
5. ALL EQUIPMENT TO BE REMOVED SHALL BE DELIVERED BY THE DESIGN-BUILDER TO A DESIGNATED FACILITY, TO BE COORDINATED WITH PRASA PERSONNEL.

LEGEND & SYMBOLS

- 1 / PS-00 — ELEVATION SHEET REFERENCE
- B / D-2.0 — BLOW-UP OR DETAIL REFERENCE
- A / PS-00 — SECTION SHEET REFERENCE
- NEW CONCRETE OR CMU BLOCK WALL
- WALLS OR AREAS TO BE DEMOLISHED
- CENTER LINE
- A — DOOR TAG
- EXISTING HOSE BIBB
- 1 — WINDOW TAG
- 2 — FINISH TAG
- 6'-6" — DESIGNATED HEIGHT F.F.L.
- F.E.=16.44 — FLOOR ELEVATION
- .15 — FLOOR ELEVATION DIFFERENCE
- 12A — EQUIPMENT TAG OR PUMP STATION COMPONENTS
- L2 — LIGHTING TAG
- SLOPE ON SURFACE
- N — NORTH REFERENCE

EBAS – JARDINES DE TOA ALTA
DESIGN AND BUILD – MECHANICAL IMPROVEMENTS SCHEDULE

1. SUBMERSIBLE PUMP: UNIT FLYGT MODEL NO. NP 3153 HT3 466 TO PROVIDE 200 GPM @ 71FT., RATED POWER 15 HP, 1,765 RPM, 230mm, EFF. 46%. HIGH-CHROME IRON IMPELLER WITH COOLING SYSTEM OR APPROVED EQUAL.
2. 6"ø D.I. 90° L.R. ELBOW, FL. ENDS
3. 6" ø D.I. NIPPLE FL. ENDS.
4. INTENTIONALLY OMITTED
5. 6"ø SURGEBUSTER SWING CHECK VALVE FL. ENDS VALMATIC MODEL 7200 WITH OPEN/CLOSE, MECHANICAL INDICATOR OR APPROVED EQUAL.
6. 6" FLANGED COUPLING ADAPTER
7. 6" PLUG VALVE FL. ENDS ECCENTRIC HAND WHEEL.
8. PRESSURE GAUGE, 0-100 PSI, (SEE DETAILS ON DWG. MD-02)
9. FIXED FIBERGLASS RAILING (SHALL COMPLY WITH STANDARD (29 CFR 1910.23)
10. ACCESS HATCH – FRAME & COVER 1.22x0.762m. (ALUMINUM, SIMILAR OR EQUAL TO HALLIDAY)
10A. ACCESS HATCH – FRAME & COVER 1.22x0.61m. (ALUMINUM, SIMILAR OR EQUAL TO HALLIDAY)
11. ACCESS HATCH – FRAME & COVER 1.07x1.07m. (ALUMINUM, SIMILAR OR EQUAL TO HALLIDAY)
12. COMBINATION AIR RELEASE VALVE SEWAGE TYPE WITH FLUSHING KIT. PROVIDE TUBE TO DISCHARGED INTO THE PIT.
13. POWER CABLES HOLDER ASSEMBLY
14. 3/8" GAUGE S.S LIFTING CHAIN (316)
15. PUMP POWER CABLES.
16. STAINLESS STEEL 316 GUIDE BAR AS PER PUMP MANUFACTURER SPECIFICATIONS FROM THE LOWER TO THE UPPER GUIDE MOUNTED ON THE ACCESS FRAME.
17. S.S. 316 SAFETY CHAIN HOOK ASSEMBLY
18. INTERMEDIATE GUIDE BAR BRACKET FOR BRACING OUTLET PIPE (SEE DETAILS ON DWG. NO. MD-02)
19. LIQUID LEVEL SENSOR AND MULTITRODE LEVEL CONTROL MERCURY FREE WITH BREAK RESISTANT CABLE SIMILAR TO MJK 7030 OR APPROVED EQUAL.
20. FIRE EXTINGUISHER TYPE ABC (10 LBS.) TO BE INSTALLED 1.07 FROM FLOOR.
21. FALL ARREST SYSTEM TO LOWER PERSONNEL. INCLUDE HARNESS. (SEE DETAILS ON DWG. MD-02)
22. ROOF EXHAUST FAN WITH ALUMINUM COVER 1300 CFM, 0.5" SP, 1/3 HP,1300 RPM, 3ø, EQUAL OR EQUAL APPROVED TO MODEL FUMEX FX BY PENN VENTILATION WITH 316 S.S. MOTOR BASE. SPARK RESISTANT CONSTRUCTION WITH EXPLOSION PROOF MOTOR AND DISCONNECT SWITCH HURRICANE RATED MIAMI-DADE CERTIFIED
23. BULLETIN BOARD 36"x24" MIN.

DRNA

COMMONWEALTH OF PUERTO RICO
DEPARTMENT OF NATURAL AND ENVIRONMENTAL RESOURCES
INFRASTRUCTURE PROJECTS DIVISION
THESE DOCUMENTS HAVE BEEN REVIEWED AND APPROVED IN ACCORDANCE WITH THE REQUIREMENTS OF THE CLEAN WATER STATE REVOLVING FUND PROGRAM

JAVIER VERARDI MATOS, PE
CHIEF

11/10/2026
DATE

30% DELIVERABLE

NO.	REMARKS	DATE	BY	APPV'D.

REVISIONS

aaf
AAF ENGINEERING, PSC
425 CARR 693 - PMB 269 - DORADO PR 00646

DESIGN-BUILD OF REHABILITATION OF WASTEWATER PUMP STATIONS-NORTH REGION (CWSRF-SAHFI)
TOA ALTA, PUERTO RICO
CIP NO. 2-00-9005

Autoridad de Acueductos y Alcantarillados
GOBIERNO DE PUERTO RICO

GOVERNMENT OF PUERTO RICO
AQUEDUCT AND SEWER AUTHORITY

SHEET TITLE: **JARDINES DE TOA ALTA PUMP STATION GROUND LEVEL FLOOR PLAN**

DRAFT BY: AAF ENGINEERING, PSC	DATE: SEPT/2026
DESIGNED BY: AAF ENGINEERING, PSC	DATE: SEPT/2026
REVISED BY: A.A.F.T.	DATE: SEPT/2026
SUBMITTED BY: AAF ENGINEERING, PSC	DATE: SEPT/2026

SCALE: H=1: 30
DRWG NO. JTA-PS-03
SHEET NO. 55 OF 74 SHEETS
–

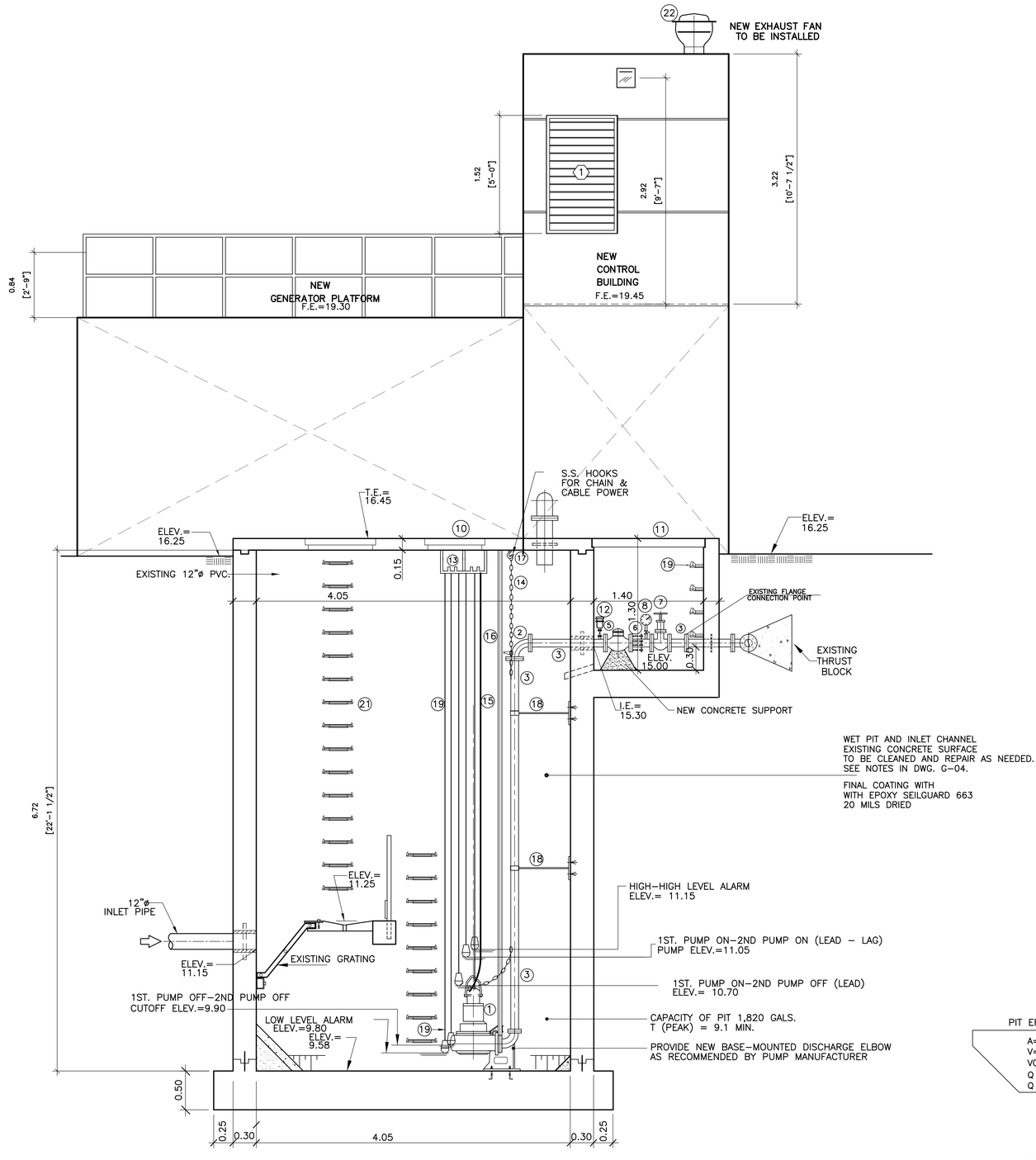

SECTION A – A

SCALE= 1:30

PUMPS OPERATIONAL SEQUENCE

A. NO MORE THAN TWO PUMPS OPERATE AT A TIME.

B. IN LOW – LOW TANK LEVEL, A LOW LEVEL CUT-OFF ALARM SIGNAL WILL BE GENERATED. LOW IN THIS CONDITION, THE PUMPS WILL NOT OPERATE IN AUTO OR MANUAL MODE.

C. AT THE LOW TANK LEVEL, ALL PUMPS STOP WORKING WHEN IN AUTO, BUT THEY CAN WORK IN MANUAL MODE.

D. AT THE "START LEAD" LEVEL, PRIMARY PUMP IS IN OPERATION.
AND. AT THE "START LAG" LEVEL, SECONDARY AND/OR RESERVE PUMP IS IN OPERATION.

F. IF, WHILE IN OPERATION, A PUMP FAILS, A BACKUP PUMP IS ACTIVATED AND AN ALARM SIGNAL IS GENERATED.

G. IN "HIGH TANK LEVEL", AN ALARM SIGNAL IS GENERATED.

H. THE PUMPS WILL ALTERNATE AFTER A SELECTED PERIOD OF OPERATION TIME IN THE CONTROL PANEL.

I. THE FOLLOWING SHALL BE MONITORED FROM THE CONTROL PANEL:

LEVEL OF TANKS.
PUMP STATUS (ON, OFF, FAIL)
PUMP FLOW.
ELECTRIC SERVICE: NORMAL (LUMA) OR GENERATOR.

PIT EFFECTIVE VOLUME CAPACITY

A=3.06 SQ. MTS
V=3.06 X 2.25 = 6.89 CUBIC METERS
VOL.= 1,820 GALS
Q (AVERAGE) = 70 GPM T (AVE) = 26 MIN
Q (PEAK) = 200 GPM T (PEAK) = 9.1 MIN.

(#)(#) REFER TO LEGEND AT DRAWING JTA-PS-03 FOR PUMP STATION COMPONENTS

COMMONWEALTH OF PUERTO RICO
DEPARTMENT OF NATURAL AND ENVIRONMENTAL RESOURCES
INFRASTRUCTURE PROJECTS DIVISION
THESE DOCUMENTS HAVE BEEN REVIEWED AND APPROVED IN ACCORDANCE WITH THE REQUIREMENTS OF THE CLEAN WATER STATE REVOLVING FUND PROGRAM

JAVIER VERARDI MATOS, PE
CHIEF

11/10/2026
DATE

30% DESIGN NOTES:

1. NOT ISSUED FOR CONSTRUCTION. THE PRESENTED LAYOUTS ARE FOR REFERENCE ONLY.
2. ALL SHOWN ELEVATIONS ARE FOR REFERENCE ONLY. DESIGN BUILDER IS RESPONSIBLE TO VERIFY AND CONFIRM ALL ELEVATIONS.
3. THE DESIGN-BUILDER IS RESPONSIBLE OF EVALUATING ALL POSSIBLE ALTERNATIVES AND PROVIDING THE MOST FEASIBLE SOLUTION BASED ON THEIR TECHNICAL ANALYSIS AND PROFESSIONAL JUDGMENT.
4. THE DESIGN-BUILDER IS RESPONSIBLE TO PROVIDE A DESIGN THAT COMPLIES WITH APPLICABLE REGULATION AND REQUIREMENTS INCLUDING BUT NOT LIMITED TO THE ADVISORY BASE FLOOD ELEVATION (ABFE) BY FEMA AND THE PUERTO RICO BUILDING CODE.
5. ALL EQUIPMENT TO BE REMOVED SHALL BE DELIVERED BY THE DESIGN-BUILDER TO A DESIGNATED FACILITY, TO BE COORDINATED WITH PRASA PERSONNEL.

30% DELIVERABLE

NO.	REMARKS	DATE	BY	APPV'D.

REVISIONS

AAF ENGINEERING, PSC
425 CARR 693 - PMB 269 - DORADO PR 00646

DESIGN-BUILD OF REHABILITATION OF WASTEWATER PUMP STATIONS-NORTH REGION (CWSRF-SAHFI)
TOA ALTA, PUERTO RICO
CIP NO. 2-00-9005

Autoridad de Acueductos y Alcantarillados
GOBIERNO DE PUERTO RICO

GOVERNMENT OF PUERTO RICO
AQUEDUCT AND SEWER AUTHORITY

SHEET TITLE: **JARDINES DE TOA ALTA PUMP STATION SECTION**

DRAFT BY: AAF ENGINEERING, PSC	DATE: SEPT/2026
DESIGNED BY: AAF ENGINEERING, PSC	DATE: SEPT/2026
REVISED BY: A.A.F.T.	DATE: SEPT/2026
SUBMITTED BY: AAF ENGINEERING, PSC	DATE: SEPT/2026

SCALE: H=1:30
DRWG NO. JTA-PS-04
SHEET NO. 56 OF 74 SHEETS
–

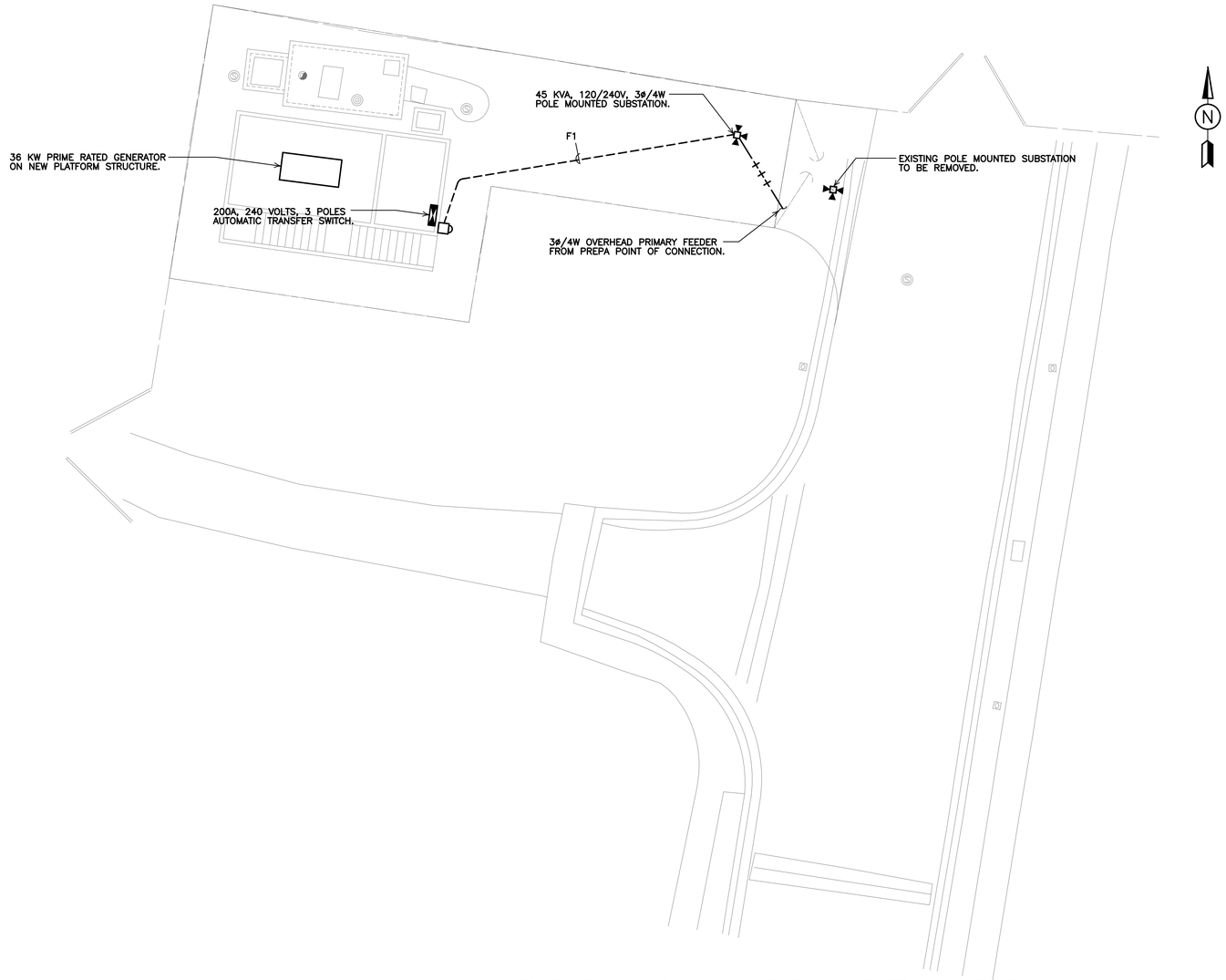

JARDINES DE TOA ALTA PUMPS STATION ELECTRICAL SITE PLAN
SCALE = 1:100

COMMONWEALTH OF PUERTO RICO
DEPARTMENT OF NATURAL AND ENVIRONMENTAL RESOURCES
INFRASTRUCTURE PROJECTS DIVISION
THESE CONSTRUCTION PLANS HAVE BEEN REVIEWED AND
APPROVED IN ACCORDANCE WITH THE REQUIREMENTS
OF THE CLEAN WATER STATE REVOLVING FUND PROGRAM
11/02/2026 _____ DATE
JAVIER VERDAY MATOS, PE
CHIEF

CAMPA, CERRATO, & ASSOC. ENGINEERS, P.S.C.
CONSULTING ELECTRICAL ENGINEERS
#9 Chardon Ave., Suite 201
HATO REY P.R. 00918
email: cmc@campacerrato.com
TEL.: 787-810-9360

30% DELIVERABLE

NO.	REMARKS	DATE	BY	APPV'D.
1	LUMA ENDORSEMENT UPDATE	1/22/24		

REVISIONS

AAF ENGINEERING, PSC
425 CARR 693 - PMB 269 - DORADO PR 00646

DESIGN-BUILD OF REHABILITATION OF WASTEWATER PUMP STATIONS-NORTH REGION (CWSRF-SAHFI)
TOA ALTA, PUERTO RICO
CIP NO. 2-00-9005

Autoridad de Acueductos y Alcantarillados
GOBIERNO DE PUERTO RICO

GOVERNMENT OF PUERTO RICO
AQUEDUCT AND SEWER AUTHORITY

SHEET TITLE:	**JARDINES DE TOA ALTA PUMPS STATION ELECTRICAL SITE PLAN**
SCALE:	1:100
DRWG NO.	**JTA-E-101**
DRAFT BY: AAF ENGINEERING, PSC	DATE: SEPT./2026
DESIGNED BY: AAF ENGINEERING, PSC	DATE: SEPT./2026
REVISED BY: A.A.F.T.	DATE: SEPT./2026
SUBMITTED BY: AAF ENGINEERING, PSC	DATE: SEPT./2026
SHEET NO.	**57** OF **74** SHEETS

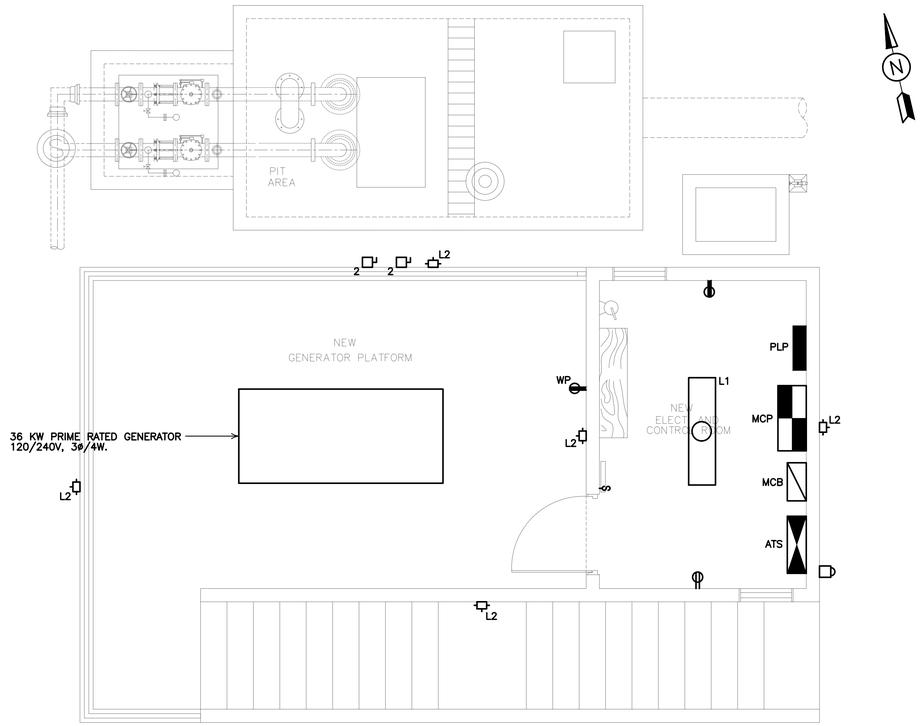

PUMPS STATION ELECTRICAL PLAN

SCALE: 3/8" = 1'-0"

COMMONWEALTH OF PUERTO RICO
DEPARTMENT OF NATURAL AND ENVIRONMENTAL RESOURCES
WATER QUALITY PROTECTION DIVISION
THESE DOCUMENTS HAVE BEEN REVIEWED AND
APPROVED IN ACCORDANCE WITH THE REQUIREMENTS
OF THE CLEAN WATER STATE REVOLVING FUND PROGRAM
11/10/2026 DATE
JAVIER VERARDI MATOS, PE
CHIEF

CAMPA, CERRATO, & ASSOC.
ENGINEERS, P.S.C.
CONSULTING ELECTRICAL ENGINEERS
#9 Chardon Ave., Suite 201
HATO REY P.R. 00918
email: cmc@campacerrato.com
TEL.: 787-810-9360

30% DELIVERABLE

NO.	REMARKS	DATE	BY	APPV'D.

REVISIONS

aaf
AAF ENGINEERING, PSC
425 CARR 693 - PMB 269 - DORADO PR 00646

DESIGN-BUILD OF REHABILITATION OF WASTEWATER PUMP STATIONS-NORTH REGION (CWSRF-SAHFI)
TOA ALTA, PUERTO RICO
CIP NO. 2-00-9005

Autoridad de Acueductos y Alcantarillados
GOBIERNO DE PUERTO RICO

GOVERNMENT OF PUERTO RICO
AQUEDUCT AND SEWER AUTHORITY

SHEET TITLE: **JARDINES DE TOA ALTA PUMPS STATION ELECTRICAL PLAN**

DRAFT BY: AAF ENGINEERING, PSC	DATE: SEPT./2026	SCALE: AS SHOWN
DESIGNED BY: AAF ENGINEERING, PSC	DATE: SEPT./2026	DRWG NO.: JTA-E-401
REVISED BY: A.A.F.T.	DATE: SEPT./2026	SHEET NO.: 58 OF 74 SHEETS
SUBMITTED BY: AAF ENGINEERING, PSC	DATE: SEPT./2026	

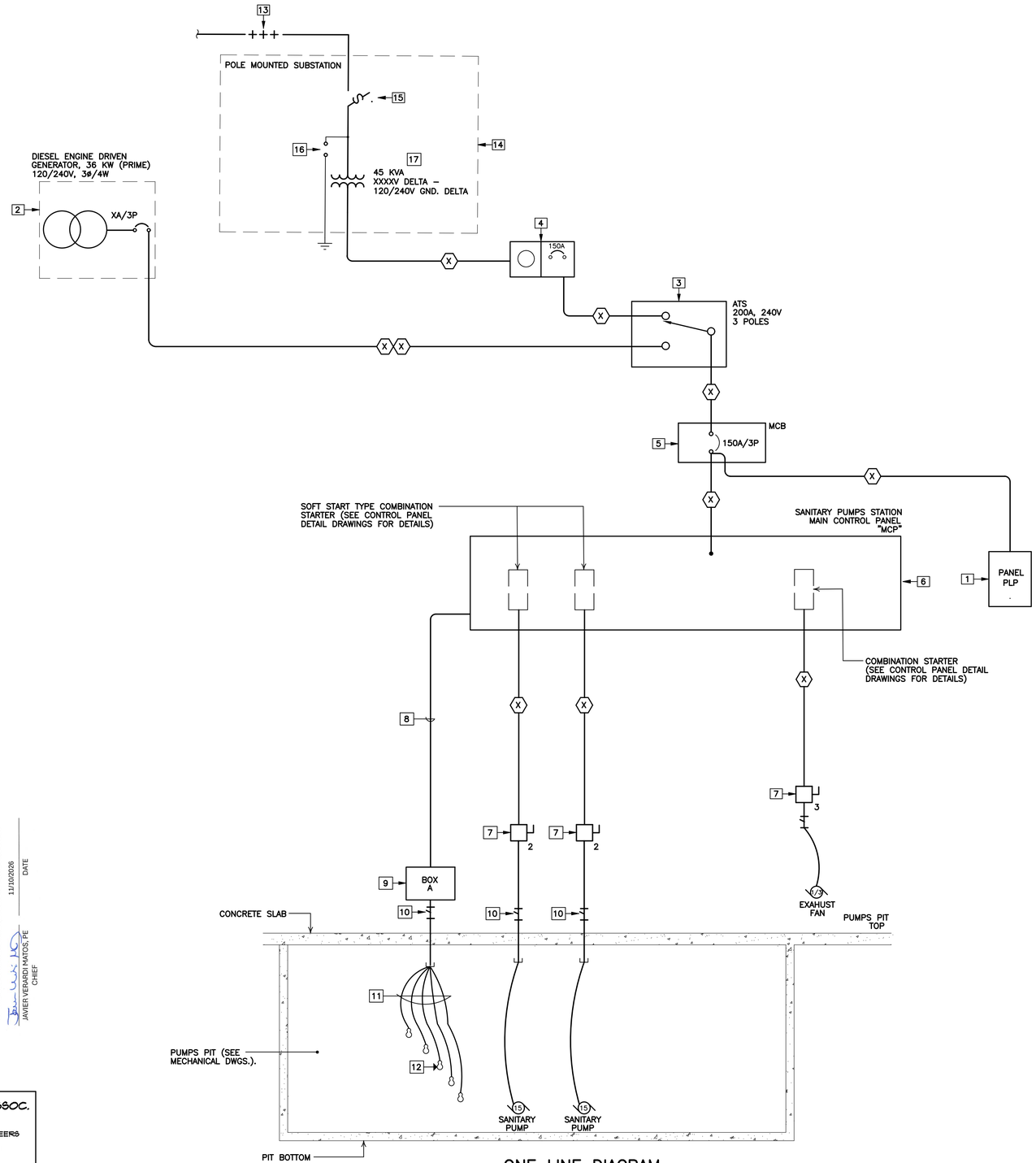

ONE LINE DIAGRAM

ONE LINE DIAGRAM EQUIPMENT LEGEND:

1. LIGHTING/RECEPTACLES DISTRIBUTION PANELBOARD. 100A BARS, 3ø/4W, MAIN LUGS ONLY, 10KAIC, 18 SPACES, BOLT ON BREAKERS, NEMA 12, SURFACE MOUNTED.
2. 36 KW PRIME RATED DIESEL DRIVEN GENERATOR, 3ø/4W, 120/240 VOLTS, IN SOUND ATTENUATED, NEMA 3R ALUMINUM ENCLOSURE, 185MPH WIND RESISTANT, WITH MAIN CIRCUIT BREAKER, CRITICAL GRADE SILENCER, UL 2200 LISTED/CERTIFIED, AND VIBRATION ISOLATORS. PROVIDED WITH 275 GAL, DUAL WALL, UL 142 LISTED/ CERTIFIED SUB BASE DIESEL TANK.
3. 200 AMPS, 240 VOLTS, 3 POLES AUTOMATIC TRANSFER SWITCH, WITH NEUTRAL AND GROUND BAR, IN NEMA 4X STAINLESS STEEL ENCLOSURE, WALL SURFACE MOUNTED. EQUIPMENT TO BE UL 1008 LISTED/CERTIFIED. WITH GENERATOR TIME DELAY FOR EMERGENCY TO NORMAL COOL OFF AND CLOCK EXERCISER. PROVIDE AT LOAD SIDE TERMINAL A 200KA TRANSIENT VOLTAGE SURGE SUPPRESSOR.
4. METER/MAIN BREAKER SERVICE EQUIPMENT, 200 AMPS, 120/240 VOLTS, 3ø/4W, IN NEMA 3R STAINLESS STEEL ENCLOSURE, WITH 150 AMPS, 240 VOLTS, 22 KAIC, 3 POLES MAIN CIRCUIT BREAKER. PREPA APPROVED. WALL FLUSH MOUNTED SO METER DEVICE IS AT 6'–0" A.F.F.
5. 150, 240 VOLTS, 22 KAIC, 3 POLES CIRCUIT BREAKER IN NEMA 4X STAINLESS STEEL ENCLOSURE WITH PROVISIONS FOR PADLOCK. PROVIDED WITH GROUND AND NEUTRAL TERMINALS.
6. MAIN CONTROL PANEL. REFER TO THE CORRESPONDING DIAGRAMS AND DETAILS ON THE CORRESPONDING CONTROL/INSTRUMENTATION DRAWINGS. 240V, 150A MIN., 3ø, 10 KAIC MIN. "MCP" – MAIN CONTROL PANEL
7. NEMA 4X STAINLESS STEEL SAFETY SWITCH SURFACE MOUNTED AT 60" A.F.F. THE SAFETY SWITCHES SCHEDULE.
8. FLOAT SWITCHES CONTROL WIRES IN 2" CONDUIT.
9. NEMA 4X STAINLESS STEEL JUNCTION BOX AT 24" ABOVE THE PITS COVER.
10. EXPLOSION PROOF SEAL (CROUSE HINDS TYPE EYS).
11. FLOAT SWITCHES SERVICE CORD IN PIT.
12. FLOAT SWITCHES IN PUMPS PIT.
13. OVERHEAD PRIMARY FEEDER FROM SERVICE DELIVERY POLE, UP TO PROJECT'S POINT OF CONNECTION, THRU INTERMEDIATE POLES, AS REQUIRED. #1/0 AWG ACSR 15KV (TREE WIRE), 3ø/4W, XXXX VOLTS.
14. 45 KVA SUBSTATION INSTALLED ON A 45FT TYPE H6 SQUARE CONCRETE POLE, ON SELF SUPPORT CONCRETE BASE (PREPA STD. M16–3 & 4).
15. 3 POLE–100A, 27KV, 150KV BIL, OPEN FUSE CUT OUT, POLE TYPE. 12,000A RMS SYM. WITH XX FUSE LINKS.
16. LIGHTNING ARRESTER, METAL OXIDE VARISTOR, POLYMER INSULATED, POLE RISER TYPE.
17. 3 – 15 KVA, 1PH, O.I.S.C., NON PCB'S, IMPROVED LOW LOSSES DISTRIBUTION TRANSFORMERS, XXXX KV PRIMARY TO 120V SECONDARY, WITH FOUR (4) 2 1/2% PRIMARY VOLTAGE TAPS AS REQUIRED BY PREPA. PRIMARY VOLTAGE TO BE CONNECTED IN DELTA, AND SECONDARY TO BE GROUNDED DELTA TO OBTAIN 3PH, 4W, 120/240V SECONDARY SERVICE.

FEEDERS LEGEND

DESIGNATION SITE PLANS	DESIGNATION ONE LINE	CABLE SIZE LIVE	CABLE SIZE NEUTRAL	CABLE SIZE GROUND	CONDUIT SIZE	NOTE
FE	(E)					1
F1	(X)					2

NOTES:
1. FE IS AN EXISTING SECONDARY FEEDER.
2. FX IS NEW FEEDER IN CONDUIT.
3. ALL EXPOSED SECTIONS OF FEEDER CONDUITS SHALL BE PVC COATED RIGID STEEL GALVANIZED.

COMMONWEALTH OF PUERTO RICO
DEPARTMENT OF NATURAL AND ENVIRONMENTAL RESOURCES
INFRASTRUCTURE PROJECTS DIVISION
THESE DOCUMENTS HAVE BEEN REVIEWED AND APPROVED IN ACCORDANCE WITH THE REQUIREMENTS OF THE CLEAN WATER STATE REVOLVING FUND PROGRAM
11/10/2026 DATE
JAVIER VERARDI MATOS, PE
CHIEF

CAMPA, CERRATO, & ASSOC. ENGINEERS, P.S.C.
CONSULTING ELECTRICAL ENGINEERS
#9 Chardon Ave., Suite 201
HATO REY P.R. 00918
email: cmc@campacerrato.com
TEL.: 787–810–9360

30% DELIVERABLE

NO.	REMARKS	DATE	BY	APPV'D.

REVISIONS

AAF ENGINEERING, PSC
425 CARR 693 · PMB 269 · DORADO PR 00646

DESIGN-BUILD OF REHABILITATION OF WASTEWATER PUMP STATIONS-NORTH REGION (CWSRF-SAHFI)
TOA ALTA, PUERTO RICO
CIP NO. 2–00–9005

Autoridad de Acueductos y Alcantarillados
GOBIERNO DE PUERTO RICO

GOVERNMENT OF PUERTO RICO
AQUEDUCT AND SEWER AUTHORITY

SHEET TITLE: **JARDINES DE TOA ALTA PUMPS STATION ELECTRICAL ONE LINE DIAGRAM**

DRAFT BY: AAF ENGINEERING, PSC	DATE: SEPT./2026	SCALE: AS SHOWN
DESIGNED BY: AAF ENGINEERING, PSC	DATE: SEPT./2026	DRWG NO.: JTA-E-601
REVISED BY: A.A.F.T.	DATE: SEPT./2026	SHEET NO.: 59 OF 74 SHEETS
SUBMITTED BY: AAF ENGINEERING, PSC	DATE: SEPT./2026	

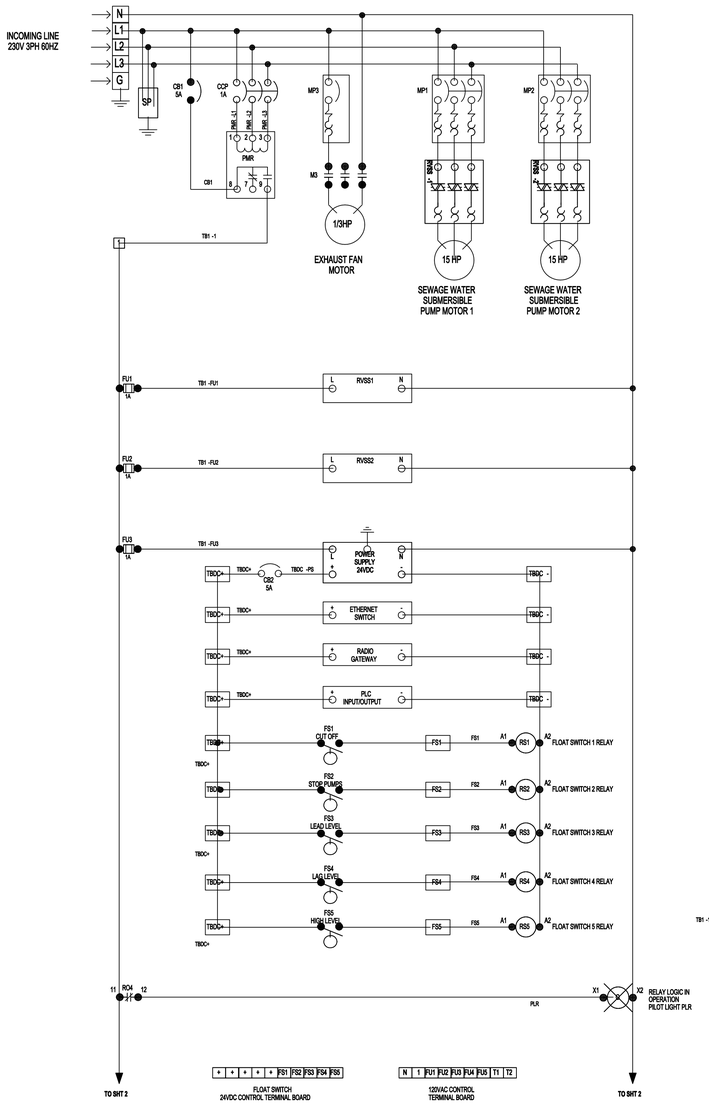

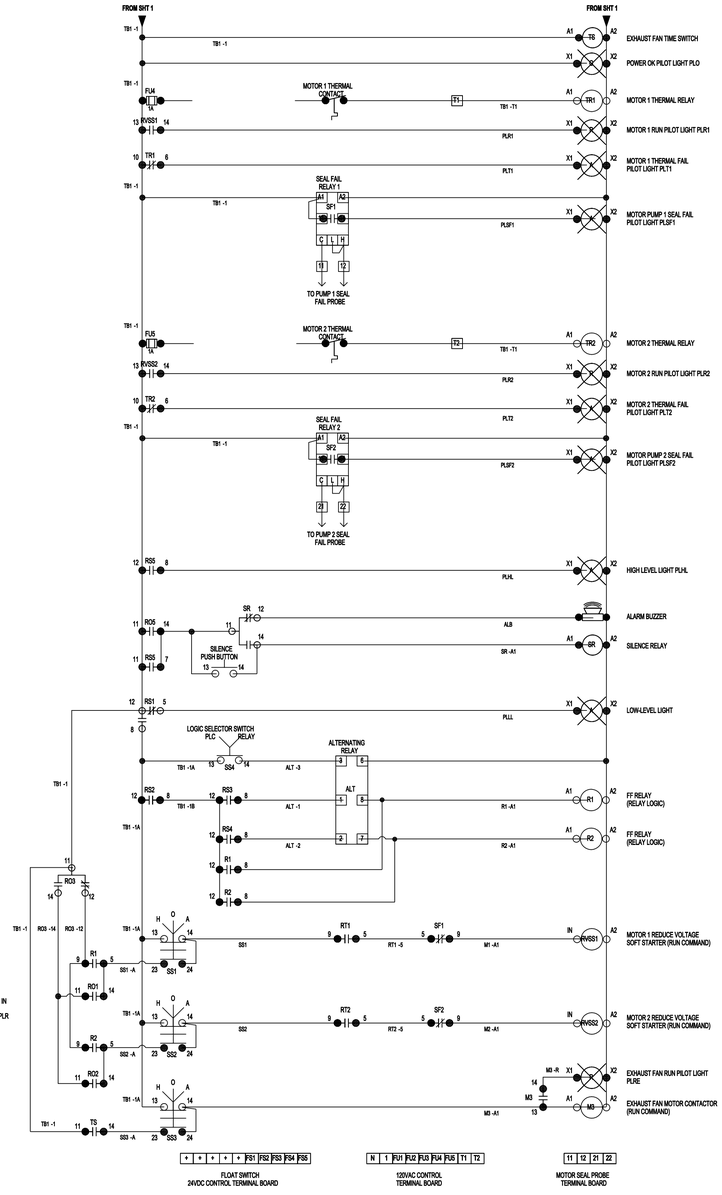

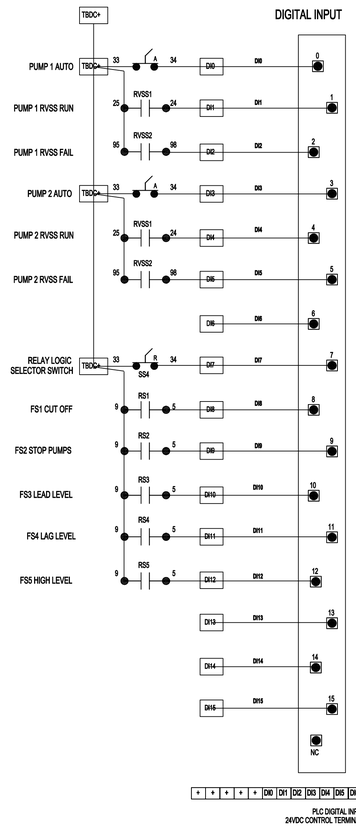

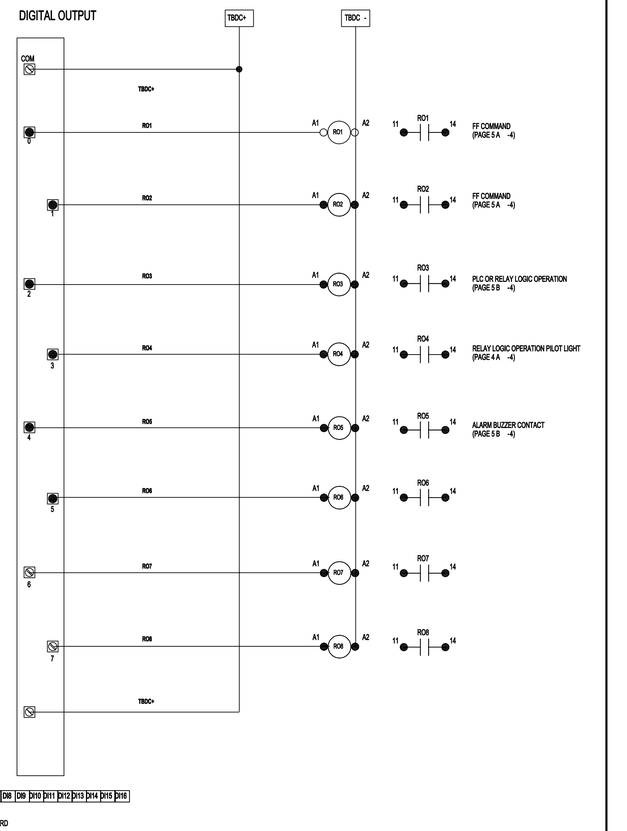

COMMONWEALTH OF PUERTO RICO
DEPARTMENT OF NATURAL AND ENVIRONMENTAL RESOURCES
INFRASTRUCTURE PROJECTS DIVISION
THESE DOCUMENTS HAVE BEEN REVIEWED AND
APPROVED IN ACCORDANCE WITH THE REQUIREMENTS
OF THE CLEAN WATER STATE REVOLVING FUND PROGRAM

11/10/2026
DATE

JAVIER VERARDI MATOS, PE
CHIEF

JARDINES DE TOA ALTA

30% DELIVERABLE

NO.	REMARKS	DATE	BY	APPV'D.

REVISIONS

AAF ENGINEERING, PSC
425 CARR 693 - PMB 269 - DORADO PR 00646

DESIGN-BUILD OF REHABILITATION OF WASTEWATER PUMP STATIONS- NORTH REGION (CWSRF-SAHFI)
TOA ALTA, PUERTO RICO
CIP NO. 2-00-9005

Autoridad de Acueductos y Alcantarillados
GOBIERNO DE PUERTO RICO

GOVERNMENT OF PUERTO RICO
AQUEDUCT AND SEWER AUTHORITY

SHEET TITLE: **JARDINES DE TOA ALTA PUMP STATION DUPLEX CONTROL PANEL**

SCALE: Hnt:.30

DRWG NO. JTA-CP-01

DRAFT BY: AAF ENGINEERING, PSC	DATE	SEPT/2026
DESIGNED BY: AAF ENGINEERING, PSC	DATE	SEPT/2026
REVISED BY: A.A.F.T.	DATE	SEPT/2026
SUBMITTED BY: AAF ENGINEERING, PSC	DATE	SEPT/2026

SHEET NO. 60 OF 74 SHEETS

–

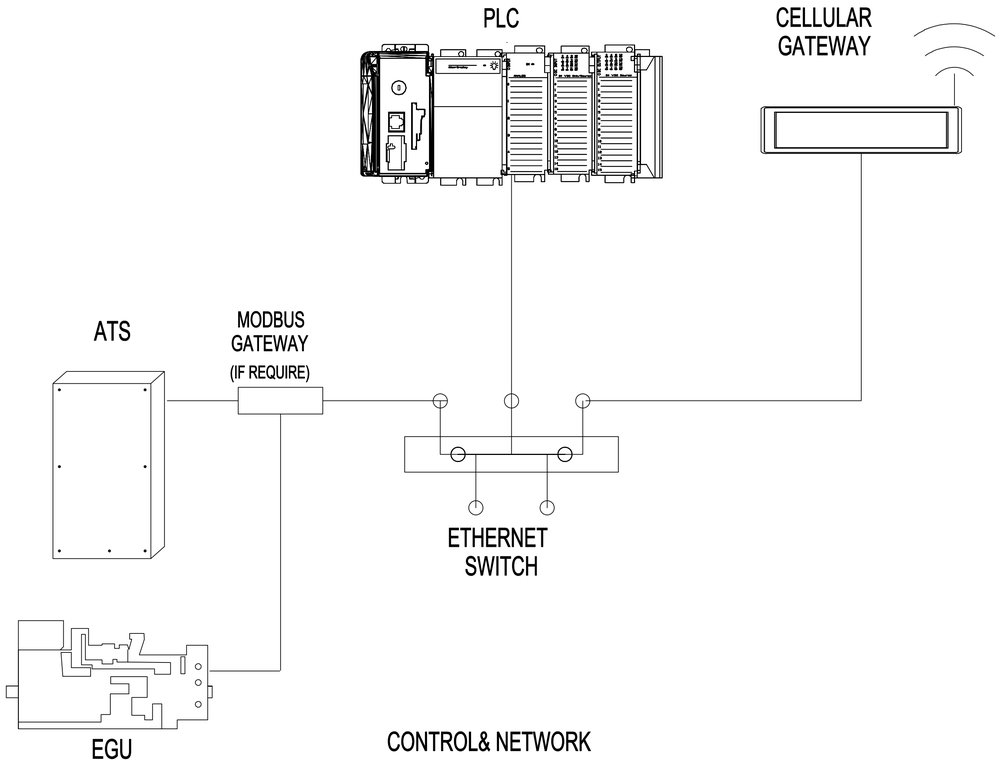

CONTROL& NETWORK

PROCESS INSTRUMENTS

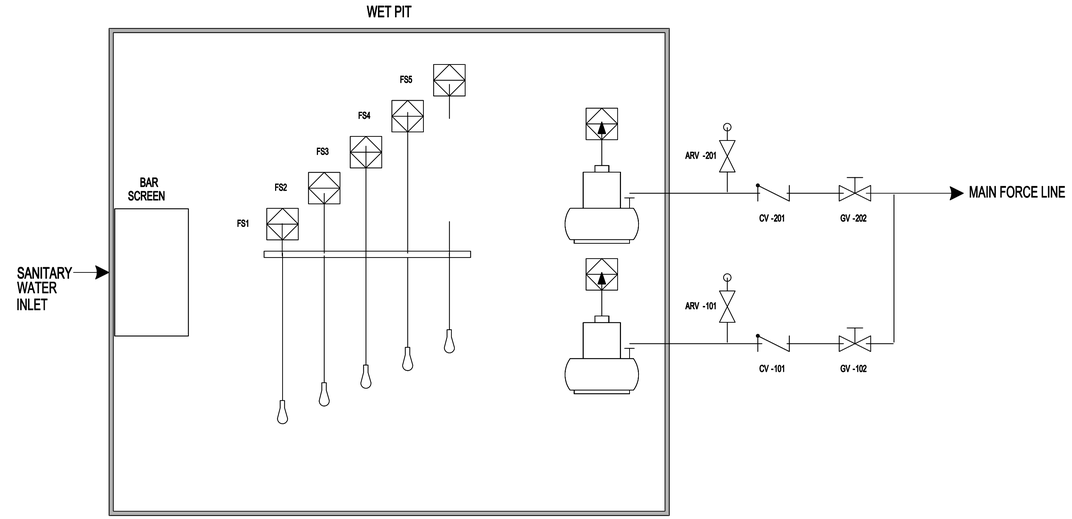

PUMPS OPERATIONAL SEQUENCE

- TWO PUMPS WILL BE ABLE TO OPERATE SIMULTANEOUSLY.
- IN LOW -LOW TANK LEVEL, A LOW LEVEL CUTOFF ALARM SIGNAL WILL BE GENERATED. LOW IN THIS CONDITION, THE PUMPS WILL NOT OPERATE IN AUTO OR MANUAL MODE.
- ATTHE LOW TANK LEVEL, ALL PUMPS STOP WORKING WHEN IN AUTO,BUTTHEY CAN WORK IN MANUAL MODE.
- ATTHE "STARTLEAD "LEVEL, PRIMARY PUMP ISIN OPERATION,AND ATTHE "STARTLAG" LEVEL, SECONDARY AND/OR RESERVE PUMP ISIN OPERATION.
- IF, WHILE IN OPERATION, A PUMP FAILS, A BACKUP PUMP IS ACTIVATED.
- IN "HIGH TANK LEVEL ", AN ALARM SIGNAL IS GENERATED.
- THE PUMPS WILL ALTERNATED WHEN THE WATER LEVEL HAS DROPPED TI THE STOP LEVEL

INSTRUMENTS LIST	
TAG	DESCRIPTION
FS1	LOW LEVEL CUT OFF
FS2	LOW LEVEL STOP PUMP'S
FS3	START LEAD LEVEL
FS4	START LAG LEVEL
FS5	HIGH LEVEL ALARM

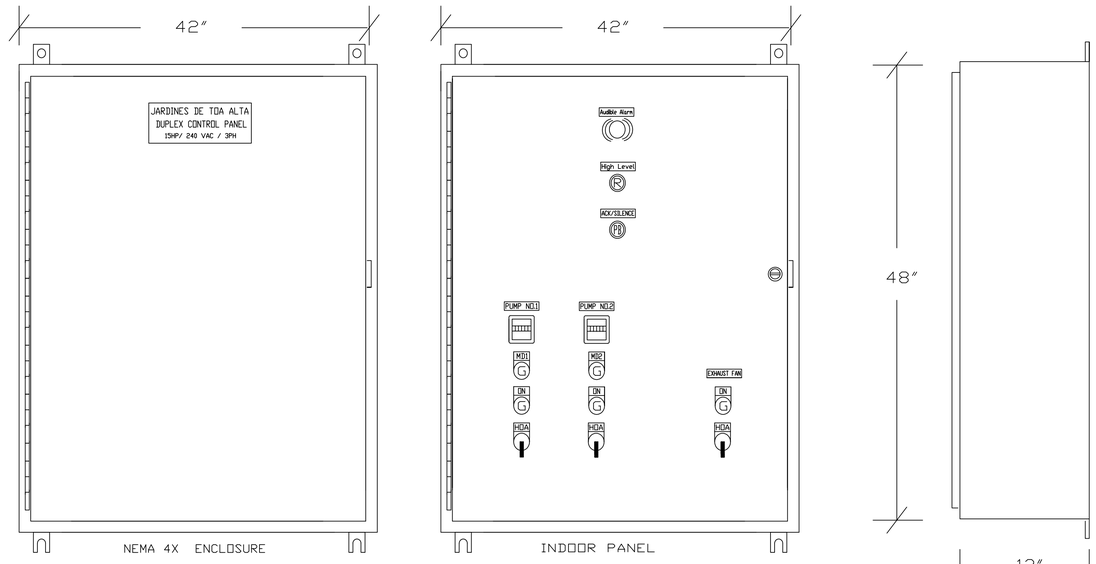

PUMP CONTROL PANEL

SCALE: N.T.S.

COMMONWEALTH OF PUERTO RICO
DEPARTMENT OF NATURAL AND ENVIRONMENTAL RESOURCES
INFRASTRUCTURE PROJECTS DIVISION
THESE DOCUMENTS HAVE BEEN REVIEWED AND
APPROVED IN ACCORDANCE WITH THE REQUIREMENTS
OF THE CLEAN WATER STATE REVOLVING FUND PROGRAM

JAVIER VERARDI MATOS, PE
CHIEF

11/10/2026
DATE

30% DELIVERABLE

NO.	REMARKS	DATE	BY	APPV'D.

REVISIONS

AAF ENGINEERING, PSC
425 CARR 693 - PMB 269 - DORADO PR 00646

DESIGN-BUILD OF REHABILITATION OF WASTEWATER PUMP STATIONS-NORTH REGION (CWSRF-SAHFI)
TOA ALTA, PUERTO RICO
CIP NO. 2-00-9005

Autoridad de Acueductos y Alcantarillados
GOBIERNO DE PUERTO RICO

GOVERNMENT OF PUERTO RICO
AQUEDUCT AND SEWER AUTHORITY

SHEET TITLE:
JARDINES DE TOA ALTA PUMP STATION
PROCESS & INSTRUMENTATION DIAGRAM (P&ID)

DRAFT BY: AAF ENGINEERING, PSC	DATE SEPT/2026	
DESIGNED BY: AAF ENGINEERING, PSC	DATE SEPT/2026	
REVISED BY: A.A.F.T.	DATE SEPT/2026	
SUBMITTED BY: AAF ENGINEERING, PSC	DATE SEPT/2026	

SCALE: H=1: 30
DRWG NO. P&ID-02
SHEET NO. 61 OF 74 SHEETS
–

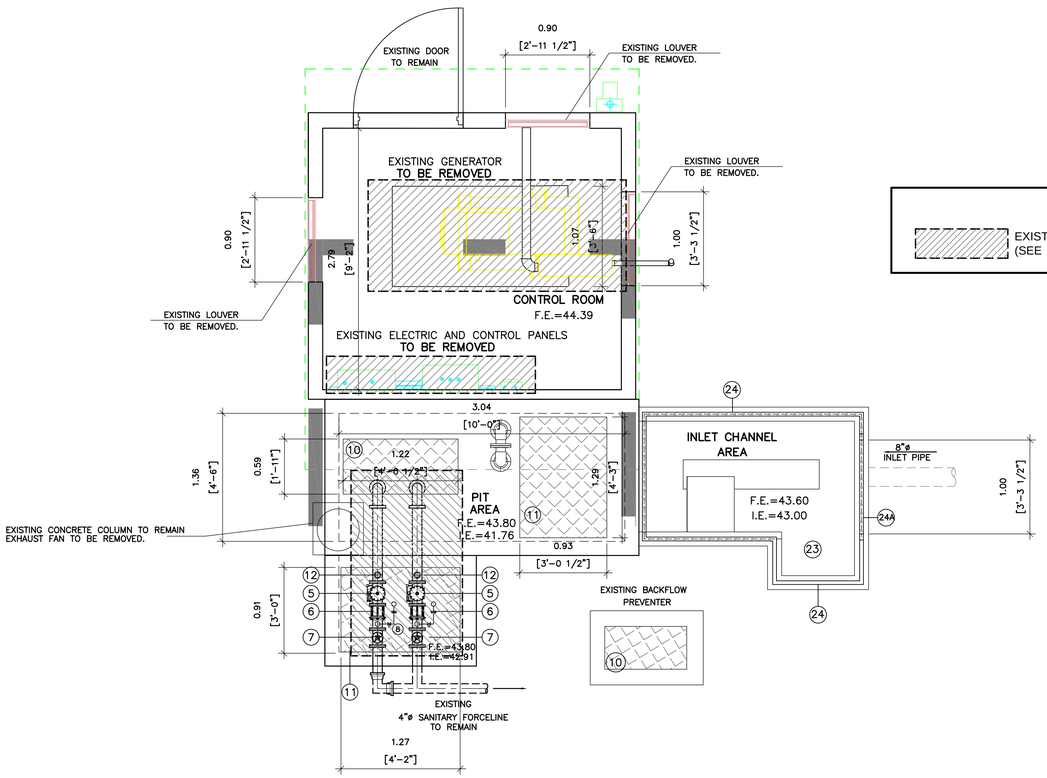

EXISTING MECHANICAL PARTS TO BE REMOVED (SEE GENERAL DEMOLITION NOTES)

N

PUMP STATION GROUND LEVEL FLOOR PLAN

SCALE: 1:30

LEGEND & SYMBOLS

- 1 / PS-00 — ELEVATION SHEET REFERENCE
- B / D-2.0 — BLOW-UP OR DETAIL REFERENCE
- A / PS-00 — SECTION SHEET REFERENCE
- NEW CONCRETE OR CMU BLOCK WALL
- WALLS OR AREAS TO BE DEMOLISHED
- CENTER LINE
- A — DOOR TAG
- EXISTING HOSE BIBB
- 1 — WINDOW TAG
- 2 — FINISH TAG
- 6'-6" — DESIGNATED HEIGHT F.F.L.
- F.E.=16.44 — FLOOR ELEVATION
- .15 — FLOOR ELEVATION DIFFERENCE
- 12A — EQUIPMENT TAG OR PUMP STATION COMPONENTS
- L2 — LIGHTING TAG
- SLOPE ON SURFACE
- N — NORTH REFERENCE

EXISTING EQUIPMENT OR PUMP STATION COMPONENTS – TO BE REMOVED

1. EXISTING PUMPS TO BE REMOVED.
2. 6"ø D.I. 90° L.R. ELBOW, FL. ENDS TO BE REMOVED.
3. 6" ø D.I. NIPPLE FL. ENDS. TO BE REMOVED.
4. INTENTIONALLY OMITTED
5. 6"ø CHECK VALVE FL. ENDS TO BE REMOVED.
6. 6" FLANGED COUPLING ADAPTER TO BE REMOVED.
7. 6" VALVE FL. ENDS TO BE REMOVED.
8. PRESSURE GAUGE TO BE REMOVED.
10. ACCESS HATCH – TO BE REMOVED.
11. ACCESS HATCH – TO BE REMOVED.
13. POWER CABLES HOLDER ASSEMBLY TO BE REMOVED.
14. S.S LIFTING CHAIN TO BE REMOVED.
15. PUMP POWER CABLES TO BE REMOVED.
16. STAINLESS STEEL 316 PUMPS GUIDE BAR TO BE REMOVED.
17. S.S. 316 SAFETY CHAIN HOOK ASSEMBLY TO BE REMOVED.
19. LIQUID LEVEL SENSOR TO BE REMOVED.
22. ROOF EXHAUST FAN TO BE REMOVED.

AREA OF ITEMS TO BE REMOVED

DRNA

COMMONWEALTH OF PUERTO RICO
DEPARTMENT OF NATURAL AND ENVIRONMENTAL RESOURCES
INFRASTRUCTURE PROJECTS DIVISION
THESE DOCUMENTS HAVE BEEN REVIEWED AND APPROVED IN ACCORDANCE WITH THE REQUIREMENTS OF THE CLEAN WATER STATE REVOLVING FUND PROGRAM

JAVIER VERARDI MATOS, PE
CHIEF

11/10/2026
DATE

GENERAL DEMOLITION NOTES:

1– THE CONSTRUCTION (DEMOLITION) SITE SHALL BE MAINTAINED NEAT AND CLEAN FREE FROM ACCUMULATION OF TRASH AND DEBRIS, REMOVE ALL TRASH, DEBRIS, RUBBISH ETC. FROM SITE AND DISPOSED OF IT IN ON A DAILY BASIS. AS PER BY APPLICABLE REGULATIONS.

2– DEMOLITION AND REMOVAL OF RUBBISH SHALL BE CONDUCTED IN A MANNER THAT ELIMINATES HAZARDS TO PERSON AND PROPERTY, AND SHALL PREVENT THE RELEASE OF DUST INTO THE AIR, SEE SPECIFICATION SECTION 02D005, AND THE GENERAL CONSOLIDATED PERMIT.

3– GENERAL CONTRACTOR SHALL COORDINATE WITH SUB CONTRACTORS OR RESPONSIBLE PARTIES FOR DEMOLITION WORK UNDER FLOOR SLABS FOR RUNS RELATED TO PLUMBING, MECHANICAL OR ELECTRICAL SYSTEMS, REFER RESPECTIVELY TO DRAWINGS OF EACH DISCIPLINE FOR LOCATION OF SAID RUNS, REQUIRED FOR PROPER INSTALLATION OF THESE SYSTEMS.

4– CONTRACTOR SHALL BE RESPONSIBLE FOR ANY DAMAGES INFLICTED TO ADJACENT PROPERTY OR OTHER AREAS DURING THE DEMOLITION PROCESS. DAMAGE ITEMS SHALL BE RESTORED TO ITS ORIGINAL CONDITION AT THE CONTRACTOR'S EXPENSE.

5– GENERAL CONTRACTOR SHALL FIELD VERIFY EXISTING CONDITIONS. DEMOLITION RESPONSIBILITIES ARE NOT NECESSARILY LIMITED TO THOSE PORTRAYED IN DEMOLITION PLAN.

6– DEMOLITION WORK INCLUDES REMOVAL AND DISPOSAL OF ALL RUBBISH AND TRASH RESULTING FROM DEMOLITION WORK, AND SHALL BE EXECUTED IN CONFORMANCE WITH ALL, STATE AND FEDERAL REGULATIONS AS SET FORTH BY ALL GOVERNING AUTHORITIES.

7– CONTRACTOR SHALL IMMEDIATELY NOTIFY THE OWNER IF ANY WORK INDICATED IN THE CONTRACT DOCUMENTS CANNOT BE PERFORMED DUE TO EXISTING FIELD CONDITIONS.

8– CONTRACTOR SHALL VERIFY LOCATION AND CURRENT USE OF ALL UTILITIES WITHIN THE PREMISES. ALL SURFACE OR ABOVE GROUND UTILITIES NOT IN USE OR LABELED TO REMAIN IN CONSTRUCTION DOCUMENTS SHALL BE REMOVED AND DISPOSED OF, ALL UNDERGROUND UTILITIES SHALL BE CAPPED OR SEALED, BURIED, AND DOCUMENTED FOR FUTURE REFERENCE.

9– THE DISPOSAL OF THE DEMOLISHED MATERIALS SHALL BE COORDINATED WITH P.R.A.S.A. PERSONNEL AT THE CONTRACTOR COST.

10– REMOVE EXISTING ELECTRICAL AND MECHANICAL TO BE RETURNED TO P.R.A.S.A. BEFORE STARTING DEMOLITION ACTIVITIES.

11– REMOVE ALL PUMPING FIXTURES INCLUDING EXPOSED PIPING. TAP SERVICES AS REQUIRED.

12– REMOVE ALL ABANDONED ELECTRICAL EQUIPMENT, CONDUITS, FIRE PROTECTION EQUIPMENT, PIPING AND A/C EQUIPMENT.

13– ALL DEMOLITION WORK SHALL BE COORDINATE WITH P.R.A.S.A.

14–EVERYTHING NOT USABLE TO BE DEMOLISHED MUST BE REMOVED FROM THE PROPERTY AS PER APPLICABLE REGULATIONS.

15–THE CONTRACTOR IS RESPONSIBLE TO FIELD VERIFY ALL POSSIBLE DEMOLITION WORK PRIOR TO BIDDING THE PROJECT.

16–ITEMS TO BE ELIMINATED (PIPES, ETC.) MUST BE REMOVED FROM THE PROPERTY.

17–THE CONTRACTOR MUST SUBMIT TO THE PROJECT SUPERVISOR A DEMOLITION PLAN AND SEQUENCE SCHEDULE. THE SCHEDULE MUST BE APPROVED BEFORE THE CONTRACTOR CAN BEGIN ANY DEMOLITION WORK.

18–THE PUMP STATIONS, ALL PROCESS UNITS, STRUCTURES AND MANHOLES SHOULD BE DEMOLISHED 3 FEET BELOW EXISTING GROUND. THE UNDERGROUND PITS SHOULD BE FILLED AND COMPACTED WITH A–2–4 MATERIAL TO BE APPROVED BY THE GEOTECHNICAL ENGINEER. ONCE THE FLOOR SLAB & WALLS ARE DEMOLISHED THE UNDERGROUND PITS ARE FILLED WITH A–2–4 COMPACTED MATERIAL GRADED TO PROVIDE THE FLOW OF WATER TO DRAIN TO THE PROPERTY LIMIT. PUMP STATIONS SHALL BE DEMOLISHED ONCE THE NEW SANITARY TRUNK SEWER IS IN SERVICE AND THE EXISTING SANITARY SYSTEM CONNECTED TO THE NEW SANITARY TRUNK SEWER.

19–EXISTING EQUIPMENT (PUMPS AND GENERATOR ETC.) TO BE REMOVED MUST BE TAKEN (BY THE CONTRACTOR) TO PRASA'S STORAGE FACILITY. THE CONTRACTOR MUST VERIFY WITH PRASA'S PROJECT ENGINEER WHICH PARTS ARE TO BE STORED AND WHICH ARE TO BE DISPOSED OF.

20–TO PREVENT ANY WASTEWATER OVERFLOW OR SPILLS, THE CONTRACTOR SHALL CONSIDER A TEMPORARY SUBMERSIBLE PUMP IN THE FIRST MANHOLE FOR THE CONNECTION THE EXISTING SANITARY SEWER TO THE NEW SYSTEM.

21–THE CONTRACTOR WILL SUMMIT DETAILS OF THE TEMPORARY SYSTEM, IF NECESSARY, TO DEVIATES THE FLOW OF THE EXISTING SANITARY SEWER. THIS METHOD SHOULD BE APPROVED BY "PROYECTOS PUBLICOS Y PRIVADOS".

22–THE FILL MATERIAL OBTAINED FROM THE DEMOLITION SHALL BE CLEARED OF ANY STEEL, DEMOLISHED TO A MAXIMUM OF 2 INCHES AND USED AS FILL MATERIAL.

23–SEE LEAD BASED PAINTS AND ASBESTOS CONTAINING MATERIALS (ACM) NO PRESENCE CERTIFICATIONS ON THIS DWG.

24–DEMOLITION SHOULD BE IN COMPLIANCE WITH ALL OSHA STANDARDS. SEE 29 CFR 1926 SUBPART T; 29CFR 1926.850 (a)

25–DURING DEMOLITION WORKS, DUST CONTROL AND SILICA CONTROL EXPOSURE MEASUREMENTS MUST BE IMPLEMENTED.

30% DESIGN NOTES:

1. NOT ISSUED FOR CONSTRUCTION. THE PRESENTED LAYOUTS ARE FOR REFERENCE ONLY.
2. ALL SHOWN ELEVATIONS ARE FOR REFERENCE ONLY. DESIGN BUILDER IS RESPONSIBLE TO VERIFY AND CONFIRM ALL ELEVATIONS.
3. THE DESIGN–BUILDER IS RESPONSIBLE OF EVALUATING ALL POSSIBLE ALTERNATIVES AND PROVIDING THE MOST FEASIBLE SOLUTION BASED ON THEIR TECHNICAL ANALYSIS AND PROFESSIONAL JUDGMENT.
4. THE DESIGN–BUILDER IS RESPONSIBLE TO PROVIDE A DESIGN THAT COMPLIES WITH APPLICABLE REGULATION AND REQUIREMENTS INCLUDING BUT NOT LIMITED TO THE ADVISORY BASE FLOOD ELEVATION (ABFE) BY FEMA AND THE PUERTO RICO BUILDING CODE.
5. ALL EQUIPMENT TO BE REMOVED SHALL BE DELIVERED BY THE DESIGN–BUILDER TO A DESIGNATED FACILITY, TO BE COORDINATED WITH PRASA PERSONNEL.

30% DELIVERABLE

NO.	REMARKS	DATE	BY	APPV'D.

REVISIONS

AAF ENGINEERING, PSC
425 CARR 693 - PMB 269 - DORADO PR 00646

DESIGN-BUILD OF REHABILITATION OF WASTEWATER PUMP STATIONS-NORTH REGION (CWSRF-SAHFI)
TOA ALTA, PUERTO RICO
CIP NO. 2–00–9005

Autoridad de Acueductos y Alcantarillados
GOBIERNO DE PUERTO RICO

GOVERNMENT OF PUERTO RICO
AQUEDUCT AND SEWER AUTHORITY

SHEET TITLE: **TOA LINDA PUMP STATION DEMOLITION PLAN**

DRAFT BY: AAF ENGINEERING, PSC	DATE: SEPT/2026
DESIGNED BY: AAF ENGINEERING, PSC	DATE: SEPT/2026
REVISED BY: A.A.F.T.	DATE: SEPT/2026
SUBMITTED BY: AAF ENGINEERING, PSC	DATE: SEPT/2026

SCALE: H=1: 30
DRWG NO. TL–DP–01
SHEET NO. 62 OF 74 SHEETS
–

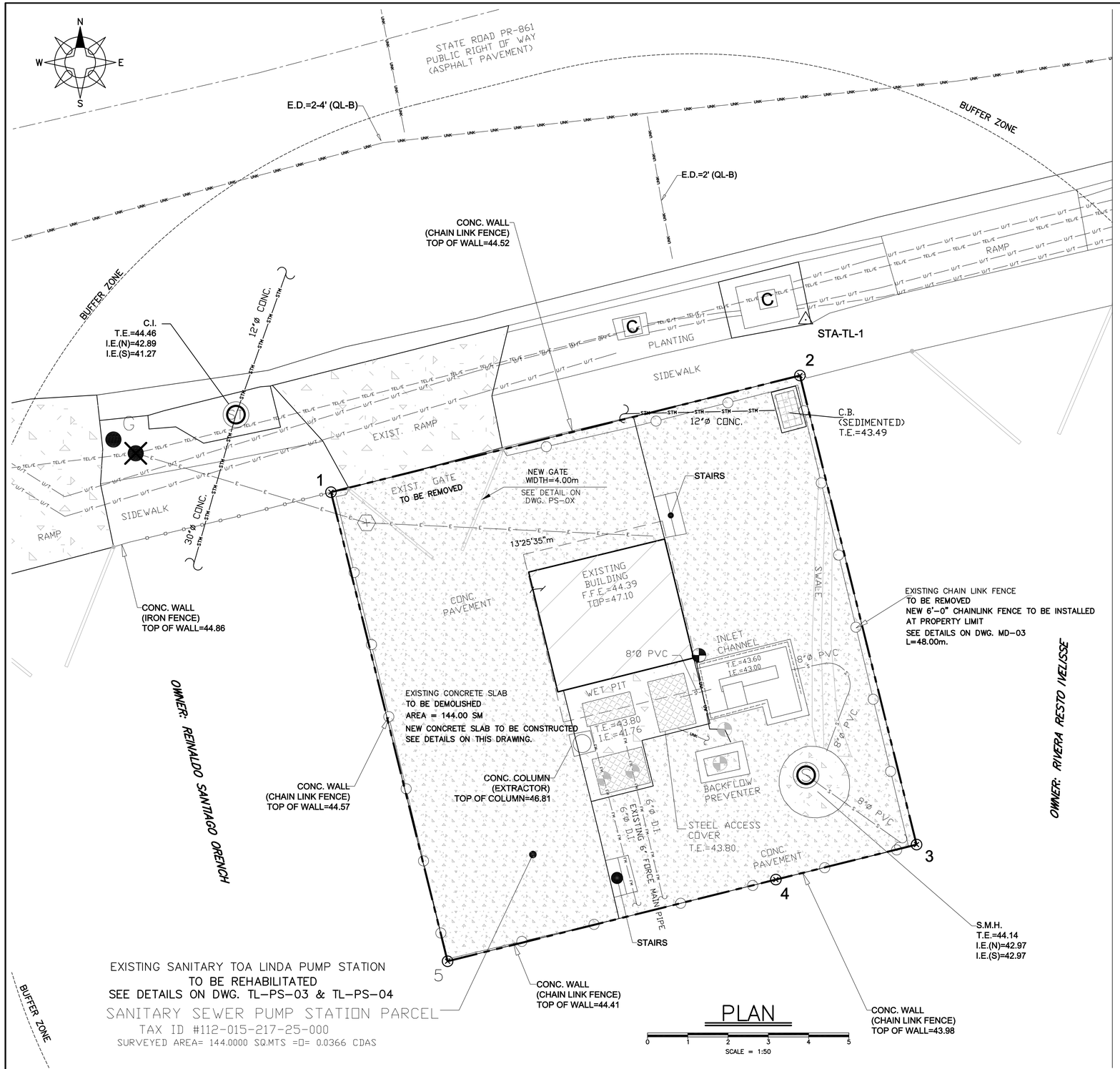

PLAN

SCALE = 1:50

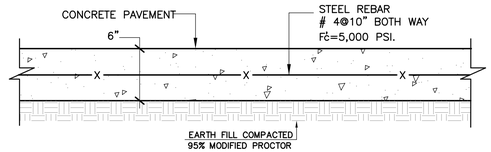

CONCRETE PAVEMENT DETAIL

NOT TO SCALE

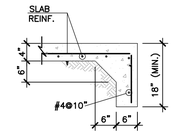

CURB DETAIL FOR PERIMETER OF CONCRETE PAVEMENT

NOT TO SCALE

NEW CONCRETE SLAB TO BE CONSTRUCTED
SEE DETAILS ON THIS DRAWING.

COMMONWEALTH OF PUERTO RICO
DEPARTMENT OF NATURAL AND ENVIRONMENTAL RESOURCES
INFRASTRUCTURE PROJECTS DIVISION
THESE DOCUMENTS HAVE BEEN REVIEWED AND
APPROVED IN ACCORDANCE WITH THE REQUIREMENTS
OF THE CLEAN WATER STATE REVOLVING FUND PROGRAM

JAVIER VERARDI MATOS, PE
CHIEF

11/10/2026
DATE

30% DELIVERABLE

NO.	REMARKS	DATE	BY	APPV'D.

REVISIONS

AAF ENGINEERING, PSC
425 CARR 693 - PMB 269 - DORADO PR 00646

DESIGN-BUILD OF REHABILITATION OF WASTEWATER PUMP STATIONS-NORTH REGION (CWSRF-SAHFI)
TOA ALTA, PUERTO RICO
CIP NO. 2-00-9005

Autoridad de Acueductos y Alcantarillados
GOBIERNO DE PUERTO RICO

GOVERNMENT OF PUERTO RICO
AQUEDUCT AND SEWER AUTHORITY

SHEET TITLE:		SCALE: H=1: 50 V=1: 50
TOA LINDA PUMP STATION SITE PLAN		DRWG NO. TL-PS-01
DRAFT BY: AAF ENGINEERING, PSC	DATE SEPT/2026	SHEET NO. 63
DESIGNED BY: AAF ENGINEERING, PSC	DATE SEPT/2026	OF 74
REVISED BY: A.A.F.T.	DATE SEPT/2026	SHEETS
SUBMITTED BY: AAF ENGINEERING, PSC	DATE SEPT/2026	–

TOA LINDA PUMP STATION

NUMBER OF UNITS	153		
Q = 153 x 198 =	30355.2		
(infiltration) 153 x 75 =	11475		
Q = Qave x 2.5 =	87363	GPD	
	61	GPM	
say	133	GPM	FLOW STUDY 2026

Qavg.
125280 GPD
87 GPM

Existing 4" pipe		
MAX. LEVEL	64.00	
MIN. WATER	42.00	
DIF. LEVEL	22.00	
LOSSES	1.58	
FITTINGS 4"	0.09	
	23.67	m
TDH =	77.6	ft
TDH =	80	ft

Fitting losses

HL = k v2 / 2g

Fitting	
90° elbow	
45° elbow	
Gate Valve	
Check Valve (swing)	
Sk =	

Existing 6" PIPE

C = 100

GPM	S	LE(m)	HF	STATIC(m)	V (fps)	FITTINGS 4" (m)	TDH(m)	TDH(ft)
20	0.086	550	0.047	22	0.23	0.00	22.05	72.34
40	0.311	550	0.171	22	0.45	0.01	22.18	72.76
50	0.470	550	0.259	22	0.57	0.01	22.27	73.07
87	***1.310***	***550***	***0.720***	***22***	***0.99***	***0.04***	***22.76***	***74.66***
90	1.395	550	0.767	22	1.02	0.04	22.81	74.82
100	1.695	550	0.932	22	1.14	0.05	22.98	75.40
133	***2.872***	***550***	***1.580***	***22***	***1.51***	***0.09***	***23.67***	***77.64***
150	3.588	550	1.973	22	1.70	0.11	24.08	79.01
200	6.109	550	3.360	22	2.27	0.20	25.56	83.84

SEGMENT (1)

New 6" pipe		
	GPD	GPM
Q =	191,520	200
D =	6	in
C =	100	
V =	1.51	fps
L =	522	m
LE =	550	m
S =	2.872	
HF =	1.580	m

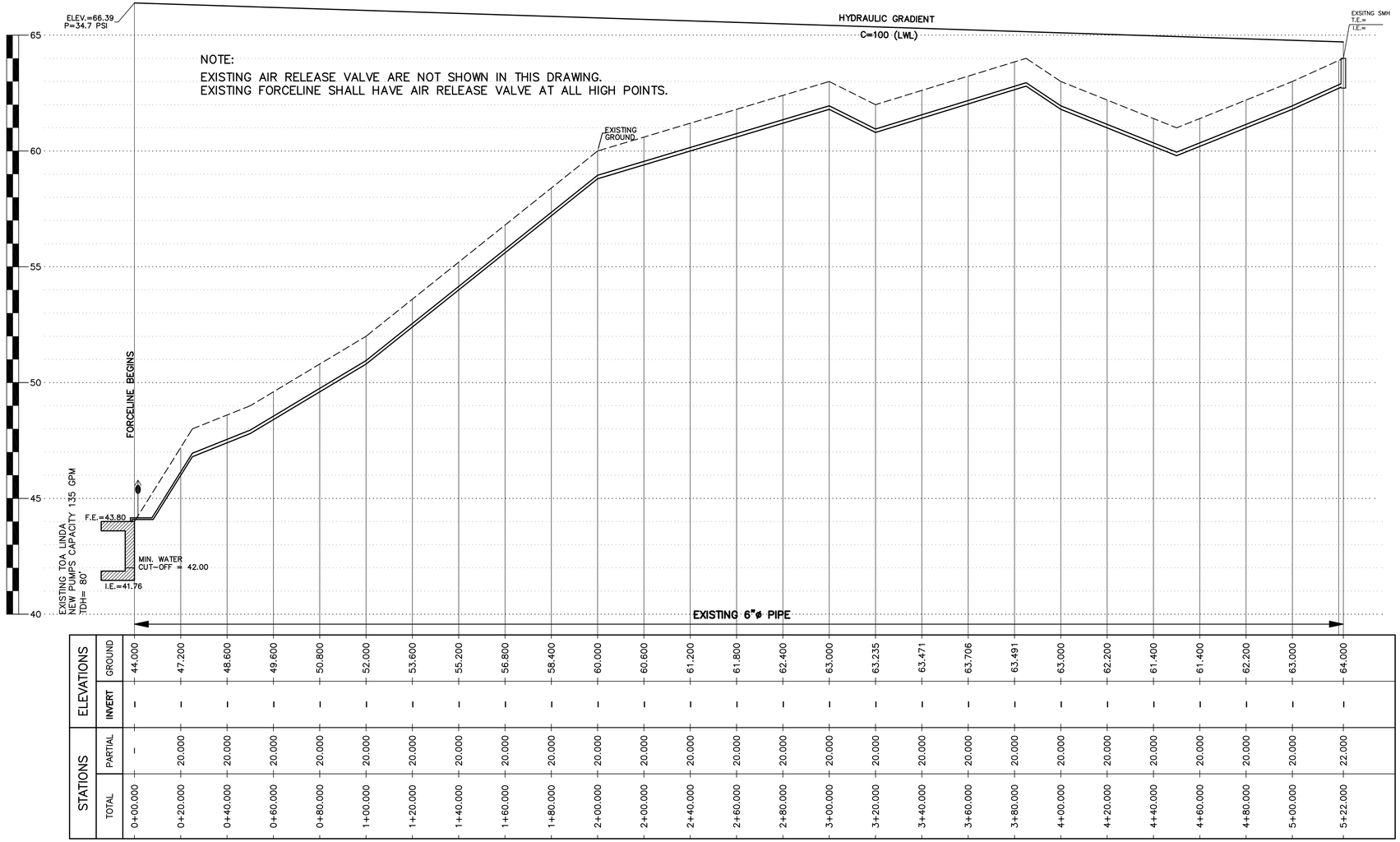

HYDRAULIC PROFILE 6"ø PVC PIPE DR-14 FROM TOA LINDA TO EXISTING MANHOLE

SCALES: HORIZONTAL=1:1,000 VERTICAL=1:100

xylem
Let's Solve Water

FLYGT
A xylem brand

NP 3127 HT 3~ Adaptive 487 | Hydraulic Data & Performance Curve

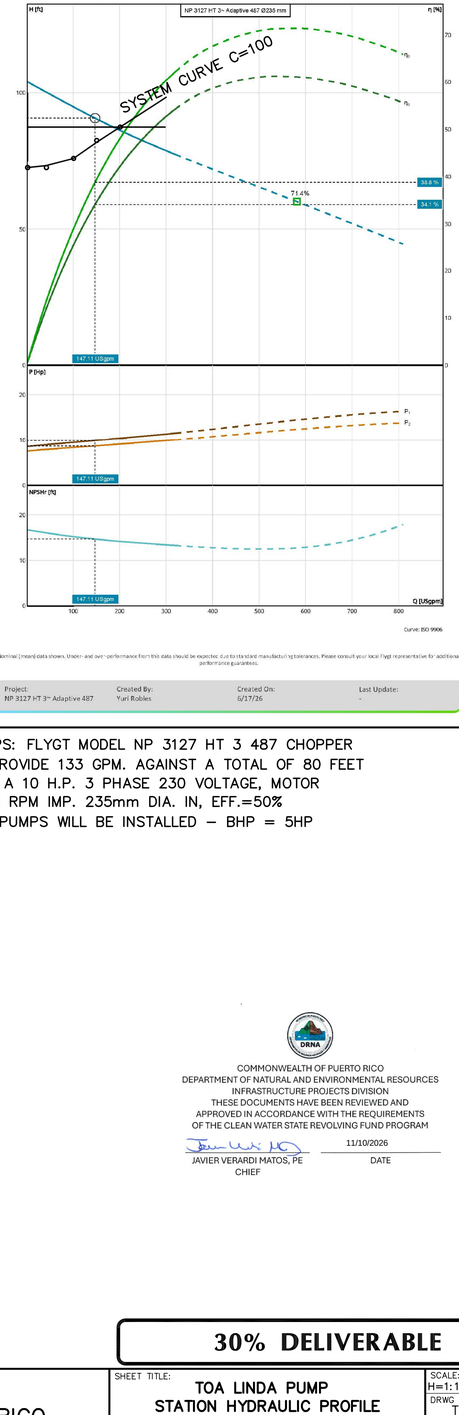

Nominal (mean) data shown. Under- and over-performance from this data should be expected due to standard manufacturing tolerances. Please consult your local Flygt representative for additional performance guarantees.

Project:	Created By:	Created On:	Last Update:
NP 3127 HT 3~ Adaptive 487	Yuri Robles	6/17/26	-

PUMPS: FLYGT MODEL NP 3127 HT 3 487 CHOPPER
TO PROVIDE 133 GPM. AGAINST A TOTAL OF 80 FEET
WITH A 10 H.P. 3 PHASE 230 VOLTAGE, MOTOR
1,745 RPM IMP. 235mm DIA. IN, EFF.=50%
TWO PUMPS WILL BE INSTALLED – BHP = 5HP

COMMONWEALTH OF PUERTO RICO
DEPARTMENT OF NATURAL AND ENVIRONMENTAL RESOURCES
INFRASTRUCTURE PROJECTS DIVISION
THESE DOCUMENTS HAVE BEEN REVIEWED AND
APPROVED IN ACCORDANCE WITH THE REQUIREMENTS
OF THE CLEAN WATER STATE REVOLVING FUND PROGRAM

JAVIER VERARDI MATOS, PE
CHIEF

11/10/2026
DATE

30% DELIVERABLE

NO.	REMARKS	DATE	BY	APPV'D.
	REVISIONS			

aaf
AAF ENGINEERING, PSC
425 CARR 693 - PMB 269 - DORADO PR 00646

DESIGN-BUILD OF REHABILITATION OF WASTEWATER PUMP STATIONS-NORTH REGION (CWSRF-SAHFI)
TOA ALTA, PUERTO RICO
CIP NO. 2-00-9005

Autoridad de Acueductos y Alcantarillados
GOBIERNO DE PUERTO RICO

GOVERNMENT OF PUERTO RICO
AQUEDUCT AND SEWER AUTHORITY

SHEET TITLE: TOA LINDA PUMP STATION HYDRAULIC PROFILE		SCALE: H=1:1,000 V=1:100
DRAFT BY: AAF ENGINEERING, PSC	DATE SEPT/2026	DRWG. NO. TL-PS-02
DESIGNED BY: AAF ENGINEERING, PSC	DATE SEPT/2026	SHEET NO. 64 OF 74 SHEETS
REVISED BY: A.A.F.T.	DATE SEPT/2026	
SUBMITTED BY: AAF ENGINEERING, PSC	DATE SEPT/2026	–

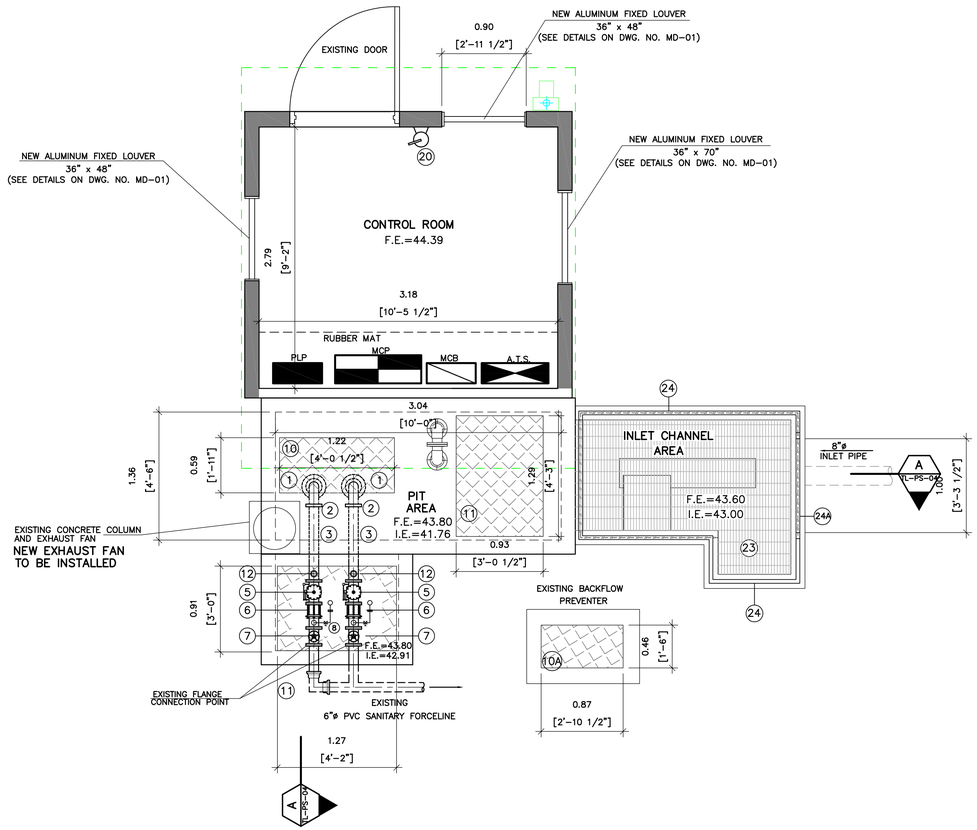

N

PUMP STATION GROUND LEVEL FLOOR PLAN

SCALE: 1:30

COMMONWEALTH OF PUERTO RICO
DEPARTMENT OF NATURAL AND ENVIRONMENTAL RESOURCES
INFRASTRUCTURE PROJECTS DIVISION
THESE DOCUMENTS HAVE BEEN REVIEWED AND
APPROVED IN ACCORDANCE WITH THE REQUIREMENTS
OF THE CLEAN WATER STATE REVOLVING FUND PROGRAM

JAVIER VERARDI MATOS, PE
CHIEF

11/10/2026
DATE

IMPORTANT NOTES

1–ABFE 1% – 100–YR BASE FLOOD ELEVATION: N/A

2–INSTALLATION OF PUMPS AS PER MANUFACTURER SPECIFICATION.

3–ALL PUMPS SHALL BE PROVIDED WITH MIX SLUDGE VALVE MODEL 4901 BY FLYGT OR APPROVED EQUAL.

4–ALL STAINLESS STEEL PARTS TO BE USED IN THE STATION SHALL BE A–316.

5– WHEN MECHANICAL HANDLING EQUIPMENT IS IN USE SUFFICIENT SAFE CLEARANCES SHALL BE ALLOWED IN AISLES, AT LOAD DOCKS, THROUGH DOOR WAYS AND WHICHEVER IS NEEDED, O.S.H.A. (29 CFR 1910.22)

6– VALVES ASSEMBLIES INDICATED IN SECTION 15100.

7– FOR DOOR AND WINDOWS SCHEDULE SEE DWG. MD–01.

8– PROVIDE PUMPS SPARE PARTS.

TOA LINDA – IMPROVEMENTS:

PUMP STATION BUILDING:

PRESSURE CLEANING OUTSIDE AND INSIDE

PAINTING AND ROOF SEALING.

CLEAN AND PAINT THE WALLS OF THE STRUCTURE INSIDE AND OUTSIDE.

REPLACE WINDOWS.

SITE:

RESTORE DISPLACED AND UNEVEN CONCRETE PAVEMENT SLABS.

STRUCTURAL:

WET PIT – REPAIR DETERIORATED CONCRETE SURFACES

HATCHES

PROVIDE FIBER GLASS GRATE COVER FOR THE BAR SCREEN AREA.

NEW COVER HATCH FOR THE BACKFLOW PREVENTER.

NEW WET PIT HATCH.

MECHANICAL PUMPS & ACCESSORIES:

DEMOLISH CRANE STRUCTURE

REPLACE FLOATS.

REPLACE PUMPS.

REPLACE GUIDE RAILS PIPING

REPLACE PIPES. VALVES

NEW ACCESS HATCHES.

REPLACE VALVES

ELECTRICAL POWER DISTRIBUTION:

NEW SUB–STATION TRANSFORMER AND COMPONENTS

NEW CONTROL PANEL

NEW EGU TO THE OUTSIDE OF THE BUILDING.
NEW AUTOMATIC TRANSFER SWITCH (ATS)
NEW DIESEL TANK DOUBLE WALL CONTAINMENT FOR 24 HOURS, 7 DAYS.

LIGHTING:

NEW THE ILLUMINATION SYSTEM

NEW LED ILLUMINATION – THREE WALL PACKS FOR THE EXTERIOR.

30% DESIGN NOTES:

1. NOT ISSUED FOR CONSTRUCTION. THE PRESENTED LAYOUTS ARE FOR REFERENCE ONLY.
2. ALL SHOWN ELEVATIONS ARE FOR REFERENCE ONLY. DESIGN BUILDER IS RESPONSIBLE TO VERIFY AND CONFIRM ALL ELEVATIONS.
3. THE DESIGN–BUILDER IS RESPONSIBLE OF EVALUATING ALL POSSIBLE ALTERNATIVES AND PROVIDING THE MOST FEASIBLE SOLUTION BASED ON THEIR TECHNICAL ANALYSIS AND PROFESSIONAL JUDGMENT.
4. THE DESIGN–BUILDER IS RESPONSIBLE TO PROVIDE A DESIGN THAT COMPLIES WITH APPLICABLE REGULATION AND REQUIREMENTS INCLUDING BUT NOT LIMITED TO THE ADVISORY BASE FLOOD ELEVATION (ABFE) BY FEMA AND THE PUERTO RICO BUILDING CODE.
5. ALL EQUIPMENT TO BE REMOVED SHALL BE DELIVERED BY THE DESIGN–BUILDER TO A DESIGNATED FACILITY, TO BE COORDINATED WITH PRASA PERSONNEL.

LEGEND & SYMBOLS

- 1 / PS–00 — ELEVATION SHEET REFERENCE
- B / D–2.0 — BLOW–UP OR DETAIL REFERENCE
- A / PS–00 — SECTION SHEET REFERENCE
- NEW CONCRETE OR CMU BLOCK WALL
- WALLS OR AREAS TO BE DEMOLISHED
- CENTER LINE
- A — DOOR TAG
- EXISTING HOSE BIBB
- 1 — WINDOW TAG
- 2 — FINISH TAG
- 6'–6" — DESIGNATED HEIGHT F.F.L.
- F.E.=16.44 — FLOOR ELEVATION
- .15 — FLOOR ELEVATION DIFFERENCE
- 12A — EQUIPMENT TAG OR PUMP STATION COMPONENTS
- L2 — LIGHTING TAG
- SLOPE ON SURFACE
- N — NORTH REFERENCE

EQUIPMENT OR PUMP STATION COMPONENTS – TO BE INSTALLED

1. SUBMERSIBLE PUMP: UNIT FLYGT MODEL NO. NP 3102 ST3 TO PROVIDE 133 GPM @ 81FT., RATED POWER 10 HP, 3,500 RPM, 135mm, EFF. 44%. HIGH–CHROME IRON IMPELLER WITH COOLING SYSTEM OR APPROVED EQUAL.
2. 6"ø D.I. 90° L.R. ELBOW, FL. ENDS
3. 6" ø D.I. NIPPLE FL. ENDS.
4. INTENTIONALLY OMITTED
5. 6"ø SURGEBUSTER SWING CHECK VALVE FL. ENDS VALMATIC MODEL 7200 WITH OPEN/CLOSE, MECHANICAL INDICATOR OR APPROVED EQUAL.
6. 6" FLANGED COUPLING ADAPTER
7. 6" PLUG VALVE FL. ENDS ECCENTRIC HAND WHEEL.
8. PRESSURE GAUGE, 0–100 PSI, (SEE DETAILS ON DWG. MD–02)
9. FIXED FIBERGLASS RAILING (SHALL COMPLY WITH STANDARD (29 CFR 1910.23)
10. ACCESS HATCH – FRAME & COVER 1.22x0.62m. (ALUMINUM, SIMILAR OR EQUAL TO HALLIDAY)
10A. ACCESS HATCH – FRAME & COVER 0.91x0.46m. (ALUMINUM, SIMILAR OR EQUAL TO HALLIDAY)
11. ACCESS HATCH – FRAME & COVER 1.22 x 0.91m. (ALUMINUM, SIMILAR OR EQUAL TO HALLIDAY)
12. COMBINATION AIR RELEASE VALVE SEWAGE TYPE WITH FLUSHING KIT. PROVIDE TUBE TO DISCHARGED INTO THE PIT.
13. POWER CABLES HOLDER ASSEMBLY
14. 3/8" GAUGE S.S LIFTING CHAIN (316)
15. PUMP POWER CABLES.
16. STAINLESS STEEL 316 GUIDE BAR AS PER PUMP MANUFACTURER SPECIFICATIONS FROM THE LOWER TO THE UPPER GUIDE MOUNTED ON THE ACCESS FRAME.
17. S.S. 316 SAFETY CHAIN HOOK ASSEMBLY
18. INTERMEDIATE GUIDE BAR BRACKET FOR BRACING OUTLET PIPE (SEE DETAILS ON DWG. NO. MD–02)
19. LIQUID LEVEL SENSOR AND MULTITRODE LEVEL CONTROL MERCURY FREE WITH BREAK RESISTANT CABLE SIMILAR TO MJK 7030 OR APPROVED EQUAL.
20. FIRE EXTINGUISHER TYPE ABC (10 LBS.) TO BE INSTALLED 1.07 FROM FLOOR.
21. FALL ARREST SYSTEM TO LOWER PERSONNEL. INCLUDE HARNESS. (SEE DETAILS ON DWG. MD–02)
22. ROOF EXHAUST FAN WITH ALUMINUM COVER 1300 CFM, 0.5" SP, 1/3 HP,1300 RPM, 3ø, EQUAL OR EQUAL APPROVED TO MODEL FUMEX FX BY PENN VENTILATION WITH 316 S.S. MOTOR BASE. SPARK RESISTANT CONSTRUCTION WITH EXPLOSION PROOF MOTOR AND DISCONNECT SWITCH HURRICANE RATED MIAMI–DADE CERTIFIED
23. CUSTOM MADE ORDER FIBERGLASS GRATING PANEL 1–1/2" BARS BY DURAGRID OR EQUAL SECURED BY S.S. HARDWARE. (SEE DETAILS ON DWG. MD–01)
24. FIXED FIBERGLASS RAILING (SHALL COMPLY WITH STANDARD (29 CFR 1910.23)
24A. REMOVABLE FIBERGLASS RAILING (SEE DETAILS ON DWG. NO. MD–02)

30% DELIVERABLE

NO.	REMARKS	DATE	BY	APPV'D.

REVISIONS

AAF ENGINEERING, PSC
425 CARR 693 - PMB 269 - DORADO PR 00646

DESIGN-BUILD OF REHABILITATION OF WASTEWATER PUMP STATIONS-NORTH REGION (CWSRF-SAHFI)
TOA ALTA, PUERTO RICO
CIP NO. 2–00–9005

Autoridad de Acueductos y Alcantarillados
GOBIERNO DE PUERTO RICO

GOVERNMENT OF PUERTO RICO
AQUEDUCT AND SEWER AUTHORITY

SHEET TITLE: **TOA LINDA PUMP STATION GROUND LEVEL FLOOR PLAN**

DRAFT BY: AAF ENGINEERING, PSC	DATE: SEPT/2026
DESIGNED BY: AAF ENGINEERING, PSC	DATE: SEPT/2026
REVISED BY: A.A.F.T.	DATE: SEPT/2026
SUBMITTED BY: AAF ENGINEERING, PSC	DATE: SEPT/2026

SCALE: H=1: 30
DRWG NO. TL–PS–03
SHEET NO. 65 OF 74 SHEETS
–

PUMPS OPERATIONAL SEQUENCE

A. NO MORE THAN TWO PUMPS OPERATE AT A TIME.

B. IN LOW – LOW TANK LEVEL, A LOW LEVEL CUT–OFF ALARM SIGNAL WILL BE GENERATED. LOW IN THIS CONDITION, THE PUMPS WILL NOT OPERATE IN AUTO OR MANUAL MODE.

C. AT THE LOW TANK LEVEL, ALL PUMPS STOP WORKING WHEN IN AUTO, BUT THEY CAN WORK IN MANUAL MODE.

D. AT THE "START LEAD" LEVEL, PRIMARY PUMP IS IN OPERATION. AND. AT THE "START LAG" LEVEL, SECONDARY AND/OR RESERVE PUMP IS IN OPERATION.

F. IF, WHILE IN OPERATION, A PUMP FAILS, A BACKUP PUMP IS ACTIVATED AND AN ALARM SIGNAL IS GENERATED.

G. IN "HIGH TANK LEVEL", AN ALARM SIGNAL IS GENERATED.

H. THE PUMPS WILL ALTERNATE AFTER A SELECTED PERIOD OF OPERATION TIME IN THE CONTROL PANEL.

I. THE FOLLOWING SHALL BE MONITORED FROM THE CONTROL PANEL:

LEVEL OF TANKS.
PUMP STATUS (ON, OFF, FAIL)
PUMP FLOW.
ELECTRIC SERVICE: NORMAL (LUMA) OR GENERATOR.

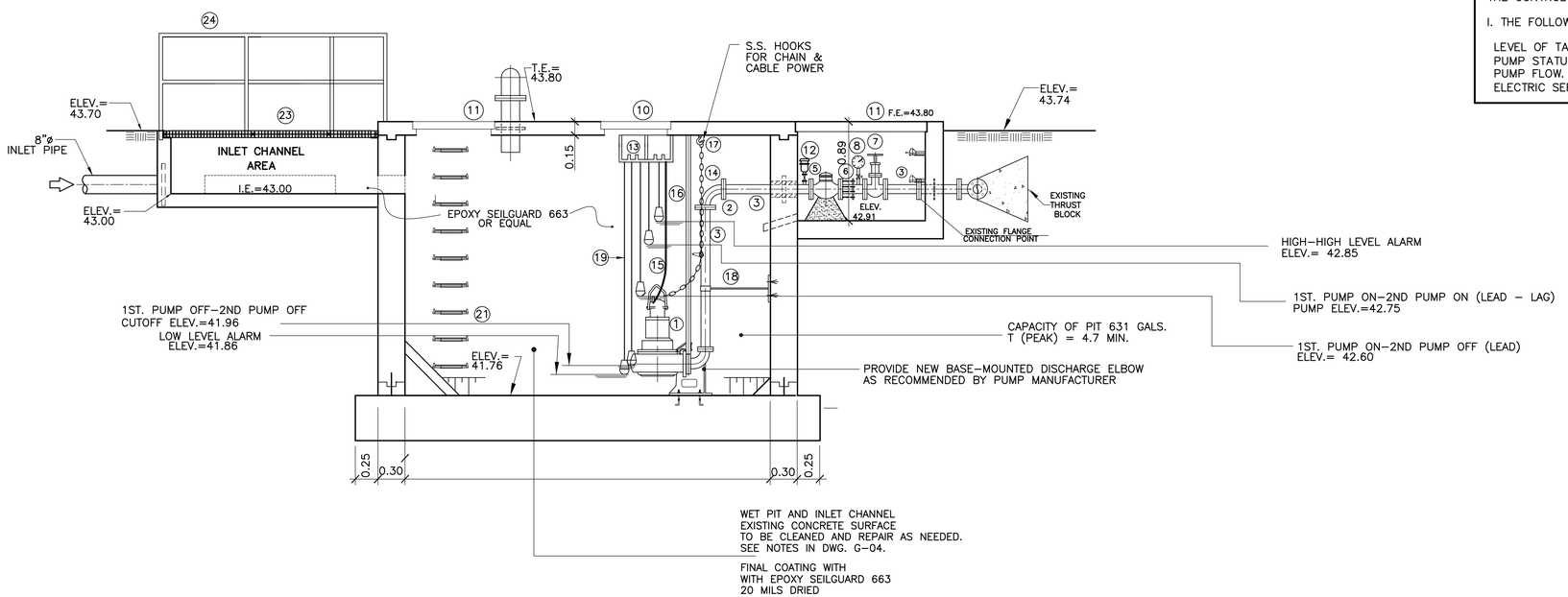

SECTION A – A

SCALE= 1:30

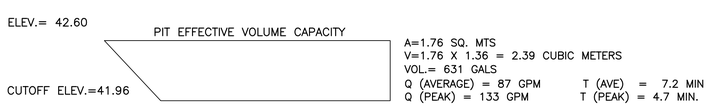

(#)(#) REFER TO LEGEND AT DRAWING JTA–PS–03 FOR PUMP STATION COMPONENTS

COMMONWEALTH OF PUERTO RICO
DEPARTMENT OF NATURAL AND ENVIRONMENTAL RESOURCES
INFRASTRUCTURE PROJECTS DIVISION
THESE DOCUMENTS HAVE BEEN REVIEWED AND APPROVED IN ACCORDANCE WITH THE REQUIREMENTS OF THE CLEAN WATER STATE REVOLVING FUND PROGRAM

JAVIER VERARDI MATOS, PE
CHIEF

11/10/2026
DATE

30% DESIGN NOTES:

1. NOT ISSUED FOR CONSTRUCTION. THE PRESENTED LAYOUTS ARE FOR REFERENCE ONLY.
2. ALL SHOWN ELEVATIONS ARE FOR REFERENCE ONLY. DESIGN BUILDER IS RESPONSIBLE TO VERIFY AND CONFIRM ALL ELEVATIONS.
3. THE DESIGN–BUILDER IS RESPONSIBLE OF EVALUATING ALL POSSIBLE ALTERNATIVES AND PROVIDING THE MOST FEASIBLE SOLUTION BASED ON THEIR TECHNICAL ANALYSIS AND PROFESSIONAL JUDGMENT.
4. THE DESIGN–BUILDER IS RESPONSIBLE TO PROVIDE A DESIGN THAT COMPLIES WITH APPLICABLE REGULATION AND REQUIREMENTS INCLUDING BUT NOT LIMITED TO THE ADVISORY BASE FLOOD ELEVATION (ABFE) BY FEMA AND THE PUERTO RICO BUILDING CODE.
5. ALL EQUIPMENT TO BE REMOVED SHALL BE DELIVERED BY THE DESIGN–BUILDER TO A DESIGNATED FACILITY, TO BE COORDINATED WITH PRASA PERSONNEL.

30% DELIVERABLE

NO.	REMARKS	DATE	BY	APPV'D.

REVISIONS

AAF ENGINEERING, PSC
425 CARR 693 - PMB 269 - DORADO PR 00646

DESIGN-BUILD OF REHABILITATION OF WASTEWATER PUMP STATIONS-NORTH REGION (CWSRF-SAHFI)
TOA ALTA, PUERTO RICO
CIP NO. 2–00–9005

Autoridad de Acueductos y Alcantarillados
GOBIERNO DE PUERTO RICO

GOVERNMENT OF PUERTO RICO
AQUEDUCT AND SEWER AUTHORITY

SHEET TITLE: **TOA LINDA PUMP STATION SECTION**

DRAFT BY: AAF ENGINEERING, PSC	DATE SEPT/2026
DESIGNED BY: AAF ENGINEERING, PSC	DATE SEPT/2026
REVISED BY: A.A.F.T.	DATE SEPT/2026
SUBMITTED BY: AAF ENGINEERING, PSC	DATE SEPT/2026

SCALE: Hor: 1: 30
DRWG NO. TL–PS–04
SHEET NO. 66 OF 74 SHEETS
–

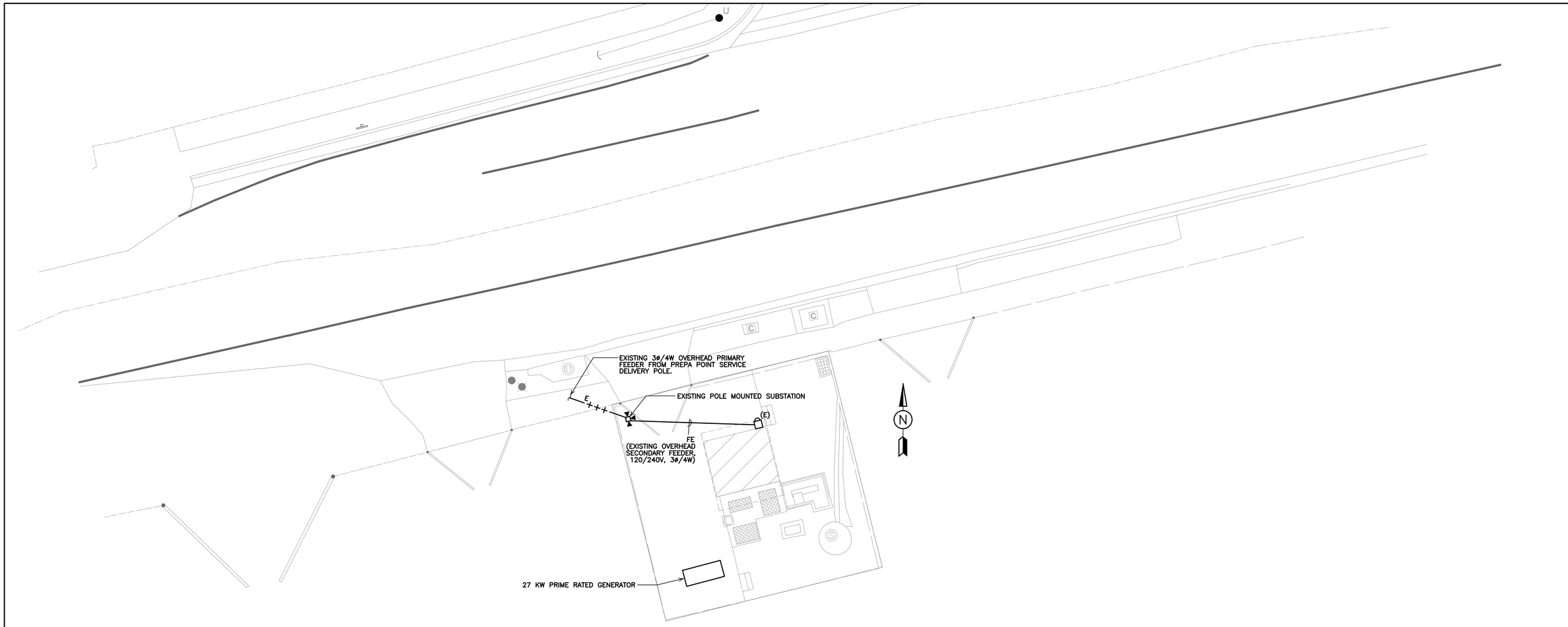

TOA LINDA PUMPS STATION ELECTRICAL SITE PLAN

SCALE = 1:100

COMMONWEALTH OF PUERTO RICO
DEPARTMENT OF NATURAL AND ENVIRONMENTAL RESOURCES
THIS OFFICIAL VERSION OF THE CONSTRUCTION DOCUMENTS HAVE BEEN REVIEWED AND APPROVED IN ACCORDANCE WITH THE REQUIREMENTS OF THE CLEAN WATER STATE REVOLVING FUND PROGRAM

11/02/2026
DATE

JAVIER VERGARA MATOS, PE
CHIEF

CAMPA, CERRATO, & ASSOC. ENGINEERS, P.S.C.
CONSULTING ELECTRICAL ENGINEERS
#9 Chardon Ave., Suite 201
HATO REY P.R. 00918
email: cmc@campacerrato.com
TEL.: 787-810-9360

30% DELIVERABLE

NO.	REMARKS	DATE	BY	APPV'D.
1	LUMA ENDORSEMENT UPDATE	1/22/24		

REVISIONS

AAF ENGINEERING, PSC
425 CARR 693 - PMB 269 - DORADO PR 00646

DESIGN-BUILD OF REHABILITATION OF WASTEWATER PUMP STATIONS-NORTH REGION (CWSRF-SAHFI)
TOA ALTA, PUERTO RICO
CIP NO. 2-00-9005

Autoridad de Acueductos y Alcantarillados
GOBIERNO DE PUERTO RICO

GOVERNMENT OF PUERTO RICO
AQUEDUCT AND SEWER AUTHORITY

SHEET TITLE: **TOA LINDA PUMPS STATION ELECTRICAL SITE PLAN**	SCALE: 1:100
DRWG NO.: **TL-E-101**	
DRAFT BY: AAF ENGINEERING, PSC — DATE: SEPT./2026	SHEET NO. **67** OF **74** SHEETS
DESIGNED BY: AAF ENGINEERING, PSC — DATE: SEPT./2026	
REVISED BY: A.A.F.T. — DATE: SEPT./2026	
SUBMITTED BY: AAF ENGINEERING, PSC — DATE: SEPT./2026	

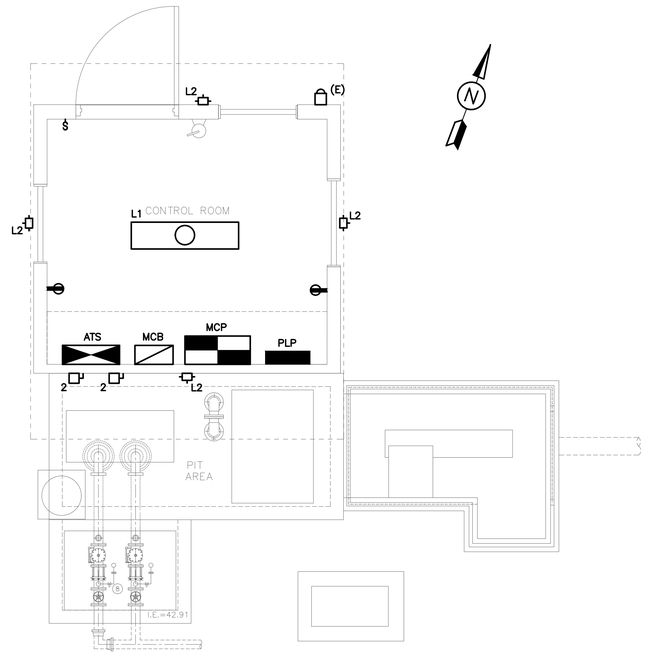

PUMPS STATION ELECTRICAL PLAN

SCALE: 3/8" = 1'-0"

COMMONWEALTH OF PUERTO RICO
DEPARTMENT OF NATURAL AND ENVIRONMENTAL RESOURCES
INFRASTRUCTURE PROJECTS DIVISION
THESE DOCUMENTS HAVE BEEN REVIEWED AND
APPROVED IN ACCORDANCE WITH THE REQUIREMENTS
OF THE CLEAN WATER STATE REVOLVING FUND PROGRAM
11/10/2026
DATE
JAVIER VERARDI MATOS, PE
CHIEF

CAMPA, CERRATO, & ASSOC. ENGINEERS, P.S.C.
CONSULTING ELECTRICAL ENGINEERS
#9 Chardon Ave., Suite 201
HATO REY P.R. 00918
email: cmc@campacerrato.com
TEL.: 787-810-9360

30% DELIVERABLE

NO.	REMARKS	DATE	BY	APPV'D.

REVISIONS

AAF ENGINEERING, PSC
425 CARR 693 - PMB 269 - DORADO PR 00646

DESIGN-BUILD OF REHABILITATION OF WASTEWATER PUMP STATIONS-NORTH REGION (CWSRF-SAHFI)
TOA ALTA, PUERTO RICO
CIP NO. 2-00-9005

Autoridad de Acueductos y Alcantarillados
GOBIERNO DE PUERTO RICO

GOVERNMENT OF PUERTO RICO
AQUEDUCT AND SEWER AUTHORITY

SHEET TITLE: **TOA LINDA PUMPS STATION ELECTRICAL PLAN**

DRAFT BY: AAF ENGINEERING, PSC	DATE	SEPT./2026
DESIGNED BY: AAF ENGINEERING, PSC	DATE	SEPT./2026
REVISED BY: A.A.F.T.	DATE	SEPT./2026
SUBMITTED BY: AAF ENGINEERING, PSC	DATE	SEPT./2026

SCALE: AS SHOWN
DRWG NO. **TL-E-401**
SHEET NO. **68** OF **74** SHEETS

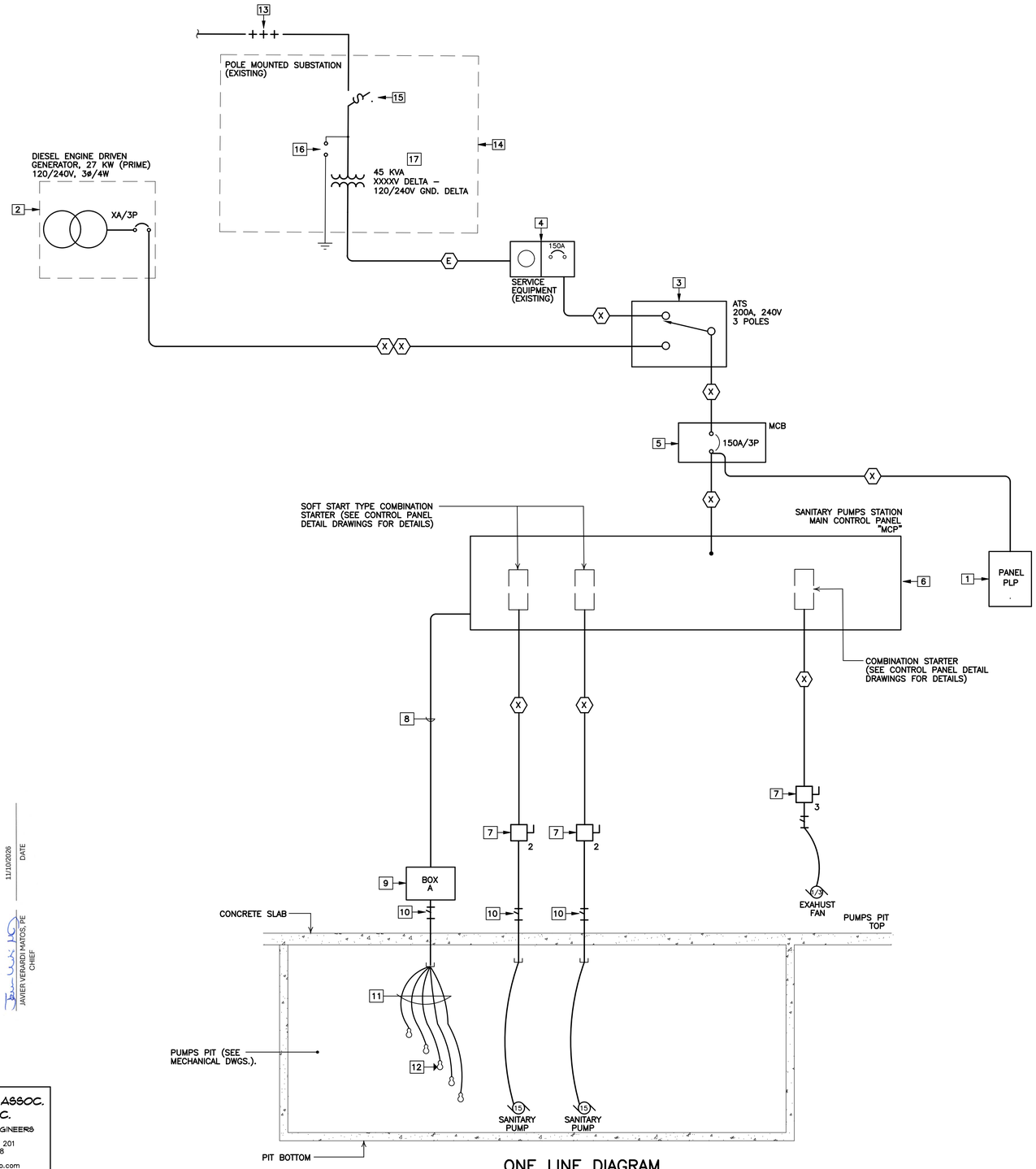

ONE LINE DIAGRAM

ONE LINE DIAGRAM EQUIPMENT LEGEND:

1. LIGHTING/RECEPTACLES DISTRIBUTION PANELBOARD. 100A BARS, 3ø/4W, MAIN LUGS ONLY, 10KAIC, 18 SPACES, BOLT ON BREAKERS, NEMA 12, SURFACE MOUNTED.
2. 27 KW PRIME RATED DIESEL DRIVEN GENERATOR, 3ø/4W, 120/240 VOLTS, IN SOUND ATTENUATED, NEMA 3R ALUMINUM ENCLOSURE, 185MPH WIND RESISTANT, WITH MAIN CIRCUIT BREAKER, CRITICAL GRADE SILENCER, UL 2200 LISTED/CERTIFIED, WITH VIBRATION ISOLATORS. PROVIDED WITH 210 GAL, DUAL WALL, UL 142 LISTED/ CERTIFIED SUB BASE DIESEL TANK.
3. 200 AMPS, 240 VOLTS, 3 POLES AUTOMATIC TRANSFER SWITCH, WITH NEUTRAL AND GROUND BAR, IN NEMA 4X STAINLESS STEEL ENCLOSURE, WALL SURFACE MOUNTED. EQUIPMENT TO BE UL 1008 LISTED/CERTIFIED. WITH GENERATOR TIME DELAY FOR EMERGENCY TO NORMAL COOL OFF AND CLOCK EXERCISER. PROVIDE ADD LOAD SIDE TERMINAL A 200KA TRANSIENT VOLTAGE SURGE SUPPRESSOR.
4. EXISTING METER/MAIN BREAKER SERVICE EQUIPMENT, 200 AMPS, 120/240 VOLTS, 3ø/4W, IN NEMA 3R STAINLESS STEEL ENCLOSURE, WITH 150 AMPS, 240 VOLTS, 3 POLES MAIN CIRCUIT BREAKER. CONTRACTOR TO VERIFY AND CONFIRM THESE METER/BREAKER EQUIPMENT SPECIFICATIONS AT FIELD.
5. 150, 240 VOLTS, 22 KAIC, 3 POLES CIRCUIT BREAKER IN NEMA 4X STAINLESS STEEL ENCLOSURE WITH PROVISIONS FOR PADLOCK. PROVIDED WITH GROUND AND NEUTRAL TERMINALS.
6. MAIN CONTROL PANEL. REFER TO THE CORRESPONDING DIAGRAMS AND DETAILS ON THE CORRESPONDING CONTROL/INSTRUMENTATION DRAWINGS. 240V, 150A MIN., 3ø, 10 KAIC MIN. "MCP" – MAIN CONTROL PANEL
7. NEMA 4X STAINLESS STEEL SAFETY SWITCH SURFACE MOUNTED AT 60" A.F.F. THE SAFETY SWITCHES SCHEDULE.
8. FLOAT SWITCHES CONTROL WIRES IN 2" CONDUIT.
9. NEMA 4X STAINLESS STEEL JUNCTION BOX AT 24" ABOVE THE PITS COVER.
10. EXPLOSION PROOF SEAL (CROUSE HINDS TYPE EYS).
11. FLOAT SWITCHES SERVICE CORD IN PIT.
12. FLOAT SWITCHES IN PUMPS PIT.
13. EXISTING OVERHEAD PRIMARY FEEDER FROM SERVICE DELIVERY POLE. 3ø/4W.
14. EXISTING POLE MOUNTED SUBSTATION. 120/240V, 3ø/4W SECONDARY.
15. EXISTING 3 POLE–100A, 27KV, 150KV BIL, OPEN FUSE CUT OUT.
16. EXISTING LIGHTNING ARRESTERS.
17. EXISTING SUBSTATION TRANSFORMERS, 3 – 15 KVA, 1PH, O.I.S.C., PRIMARY VOLTAGE CONNECTED IN DELTA, AND SECONDARY GROUNDED DELTA, FOR A 120/240 VOLTS 3ø/4W SECONDARY SERVICE. CONTRACTOR TO VERIFY AND CONFIRM THESE SPECIFICATIONS, INCLUDING ITS PRIMARY VOLTAGE, AT FIELD.

FEEDERS LEGEND

DESIGNATION SITE PLANS	DESIGNATION ONE LINE	CABLE SIZE LIVE	CABLE SIZE NEUTRAL	CABLE SIZE GROUND	CONDUIT SIZE	NOTE
FE	(E)					1
F1	(X)					2

NOTES:

1. FE IS AN EXISTING SECONDARY FEEDER.
2. FX IS NEW FEEDER IN CONDUIT.
3. ALL EXPOSED SECTIONS OF FEEDER CONDUITS SHALL BE PVC COATED RIGID STEEL GALVANIZED.

COMMONWEALTH OF PUERTO RICO
DEPARTMENT OF NATURAL AND ENVIRONMENTAL RESOURCES
INFRASTRUCTURE PROJECTS DIVISION
THESE CONSTRUCTION PLANS ARE REVIEWED AND
APPROVED IN ACCORDANCE WITH THE REQUIREMENTS
OF THE CLEAN WATER STATE REVOLVING FUND PROGRAM
11/10/2026 — DATE
JAVIER VERGARA MATOS, PE
CHIEF

CAMPA, CERRATO, & ASSOC. ENGINEERS, P.S.C.
CONSULTING ELECTRICAL ENGINEERS
#9 Chardon Ave., Suite 201
HATO REY P.R. 00918
email: cmc@campacerrato.com
TEL.: 787-810-9360

30% DELIVERABLE

NO.	REMARKS	DATE	BY	APPV'D.

REVISIONS

AAF ENGINEERING, PSC
425 CARR 693 - PMB 269 - DORADO PR 00646

DESIGN-BUILD OF REHABILITATION OF WASTEWATER PUMP STATIONS-NORTH REGION (CWSRF-SAHFI)
TOA ALTA, PUERTO RICO
CIP NO. 2–00–9005

Autoridad de Acueductos y Alcantarillados
GOBIERNO DE PUERTO RICO

GOVERNMENT OF PUERTO RICO
AQUEDUCT AND SEWER AUTHORITY

SHEET TITLE: **TOA LINDA PUMPS STATION ELECTRICAL ONE LINE DIAGRAM**

DRAFT BY: AAF ENGINEERING, PSC	DATE SEPT./2026	SCALE: AS SHOWN	
DESIGNED BY: AAF ENGINEERING, PSC	DATE SEPT./2026	DRWG NO. TL-E-601	
REVISED BY: A.A.F.T.	DATE SEPT./2026	SHEET NO. 69 OF 74 SHEETS	
SUBMITTED BY: AAF ENGINEERING, PSC	DATE SEPT./2026		

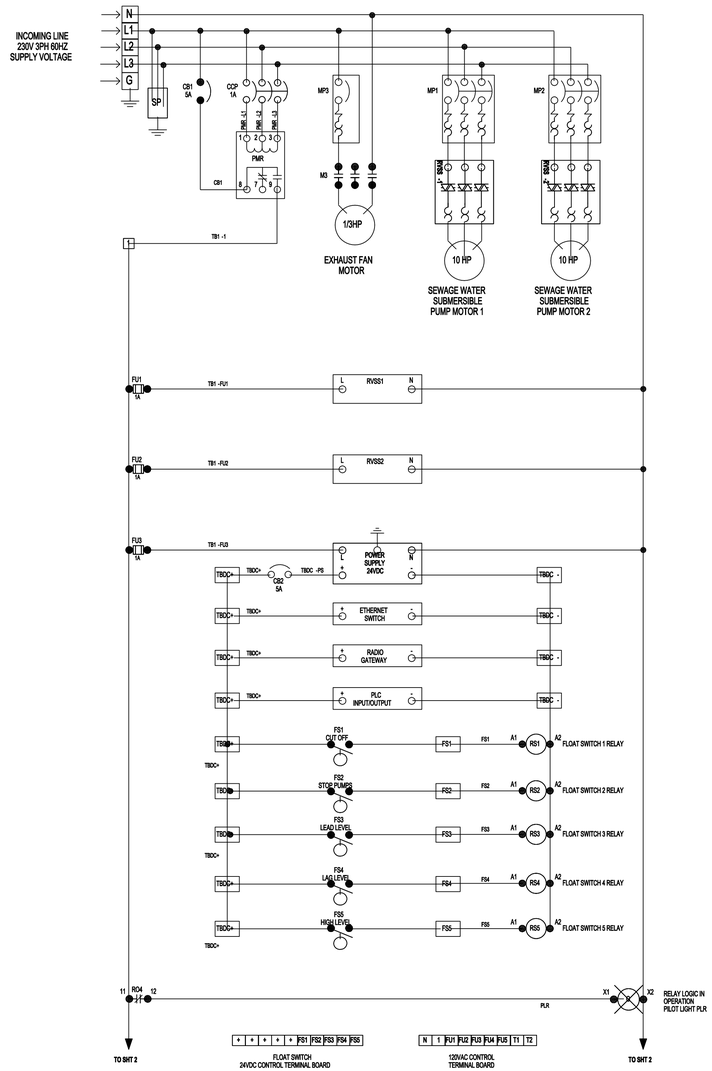

PUMP CONTROL PANEL DIAGRAM 1

SCALE: N.T.S.

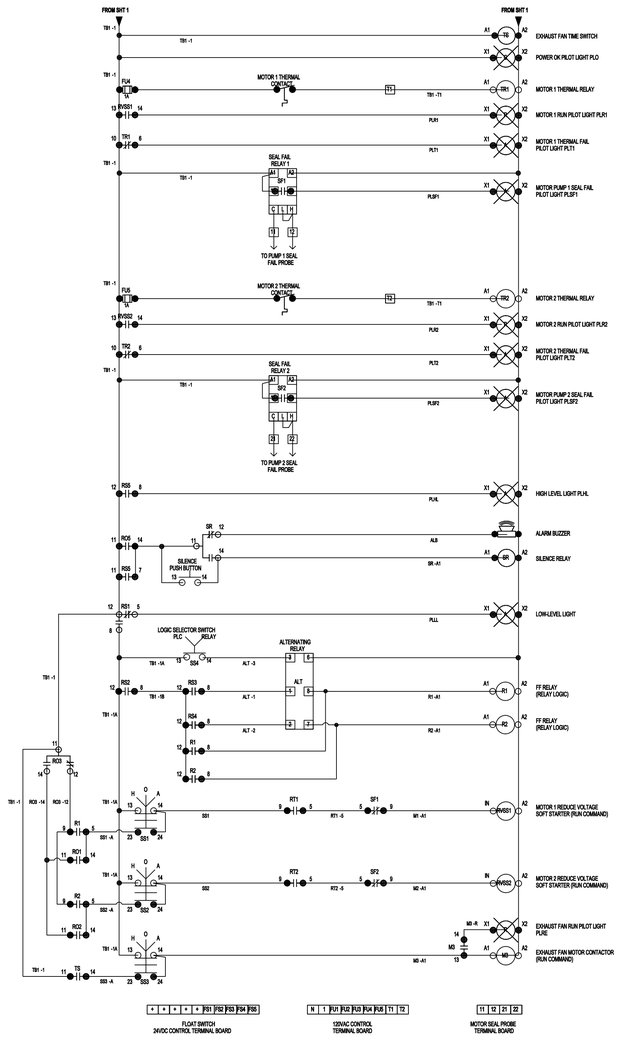

PUMP CONTROL PANEL DIAGRAM 2

SCALE: N.T.S.

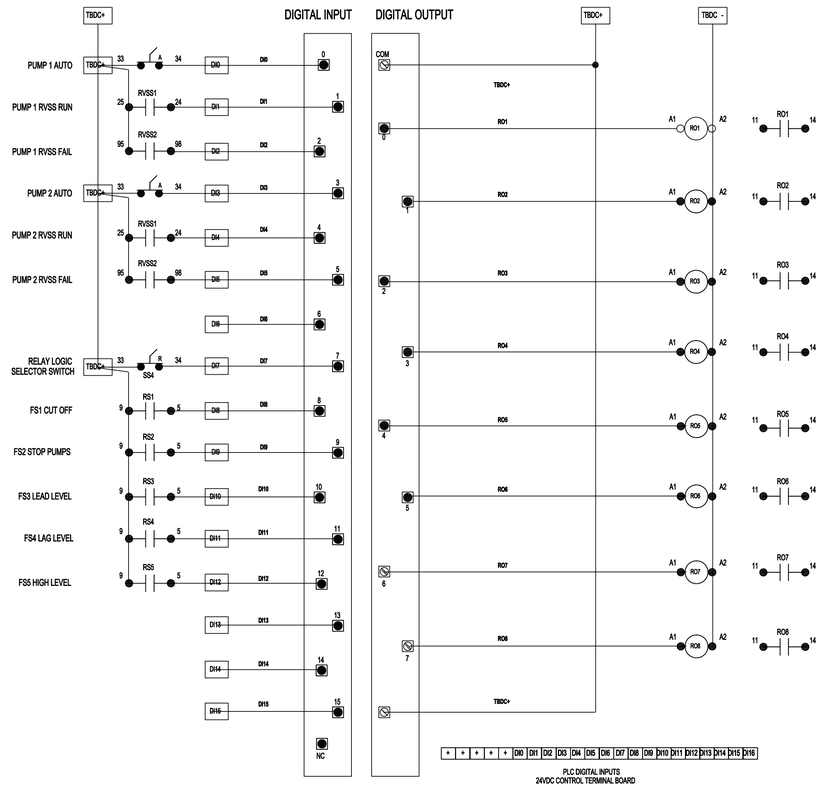

PUMP CONTROL PANEL DIAGRAM 3

SCALE: N.T.S.

COMMONWEALTH OF PUERTO RICO
DEPARTMENT OF NATURAL AND ENVIRONMENTAL RESOURCES
INFRASTRUCTURE PROJECTS DIVISION
THESE DOCUMENTS HAVE BEEN REVIEWED AND
APPROVED IN ACCORDANCE WITH THE REQUIREMENTS
OF THE CLEAN WATER STATE REVOLVING FUND PROGRAM

JAVIER VERARDI MATOS, PE
CHIEF

11/10/2026
DATE

30% DELIVERABLE

NO.	REMARKS	DATE	BY	APPV'D.

REVISIONS

AAF ENGINEERING, PSC
425 CARR 693 - PMB 269 - DORADO PR 00646

DESIGN-BUILD OF REHABILITATION OF WASTEWATER PUMP STATIONS-NORTH REGION (CWSRF-SAHFI)
TOA ALTA, PUERTO RICO
CIP NO. 2-00-9005

Autoridad de Acueductos y Alcantarillados
GOBIERNO DE PUERTO RICO

GOVERNMENT OF PUERTO RICO
AQUEDUCT AND SEWER AUTHORITY

SHEET TITLE:
TOA LINDA PUMP STATION
DUPLEX CONTROL PANEL DIAGRAMS

DRAFT BY: AAF ENGINEERING, PSC	DATE SEPT/2026
DESIGNED BY: AAF ENGINEERING, PSC	DATE SEPT/2026
REVISED BY: A.A.F.T.	DATE SEPT/2026
SUBMITTED BY: AAF ENGINEERING, PSC	DATE SEPT/2026

SCALE: H=1: 30
DRWG NO. TL-CP-01
SHEET NO. 70 OF 74 SHEETS
–

PROCESS INSTRUMENTS

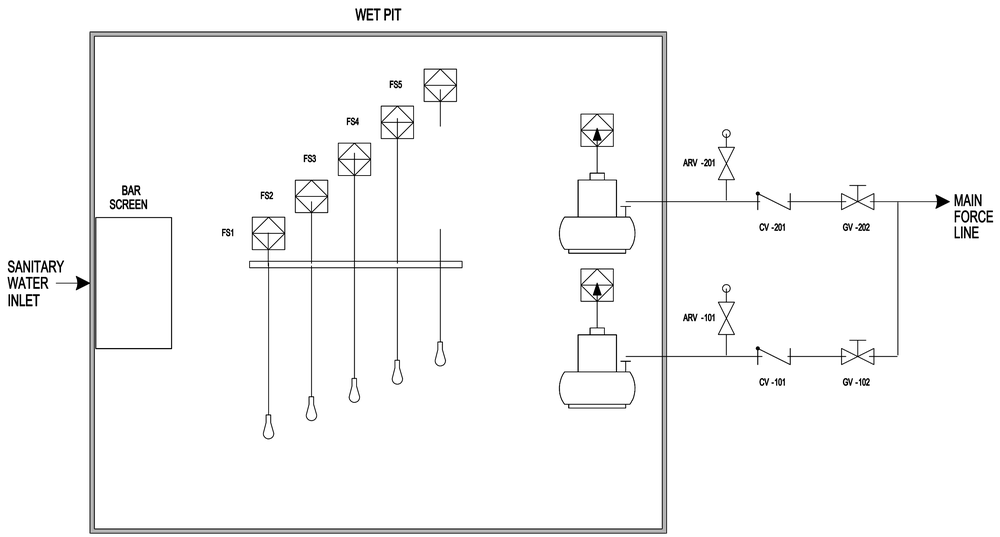

PUMPS OPERATIONAL SEQUENCE

- TWO PUMPS WILL BE ABLE TO OPERATE SIMULTANEOUSLY.
- IN LOW –LOW TANK LEVEL, A LOW LEVEL CUTOFF ALARM SIGNAL WILL BE GENERATED. LOW IN THIS CONDITION, THE PUMPS WILL NOT OPERATE IN AUTO OR MANUAL MODE.
- AT THE LOW TANK LEVEL, ALL PUMPS STOP WORKING WHEN IN AUTO, BUTTHEY CAN WORK IN MANUAL MODE.
- AT THE "START LEAD " LEVEL, PRIMARY PUMP ISIN OPERATION, AND AT THE "START LAG " LEVEL, SECONDARY AND/OR RESERVE PUMP ISIN OPERATION.
- IF, WHILE IN OPERATION, A PUMP FAILS, A BACKUP PUMP IS ACTIVATED.
- IN "HIGH TANK LEVEL ", AN ALARM SIGNAL IS GENERATED.
- THE PUMPS WILL ALTERNATED WHEN THE WATER LEVEL HAS DROPPED TI THE STOP LEVEL.

INSTRUMENTS LIST	
TAG	DESCRIPTION
FS1	LOW LEVEL CUT OFF
FS2	LOW LEVEL STOP PUMP'S
FS3	START LEAD LEVEL
FS4	START LAG LEVEL
FS5	HIGH LEVEL ALARM

CONTROL & NETWORK

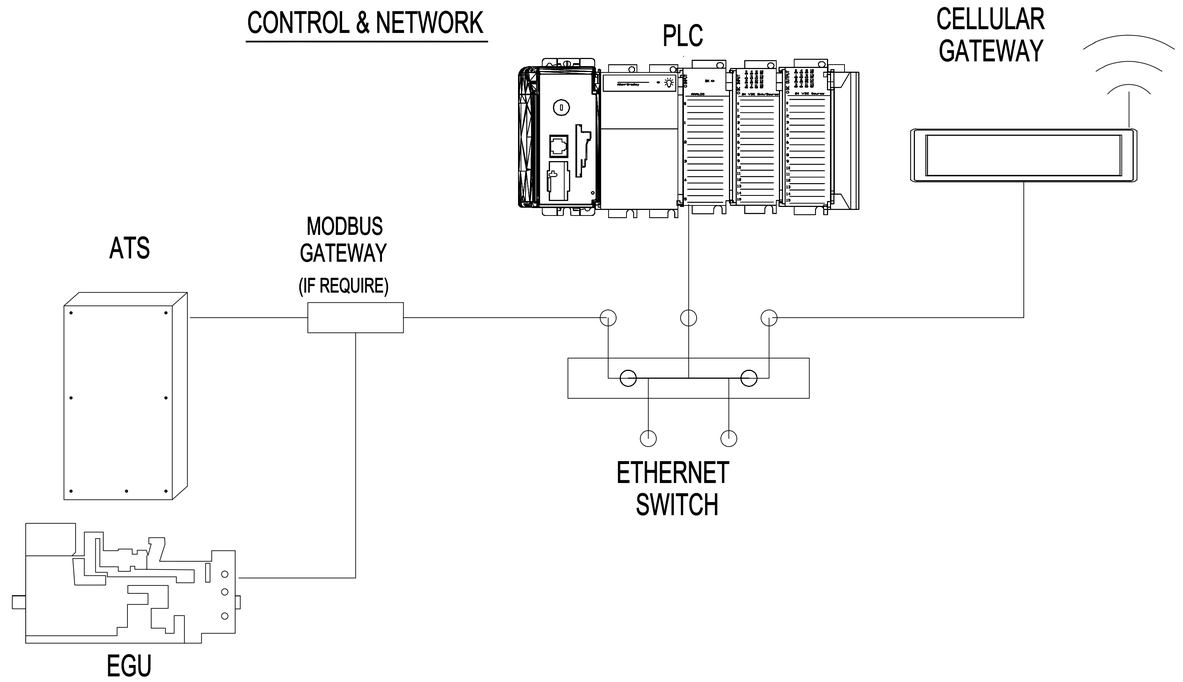

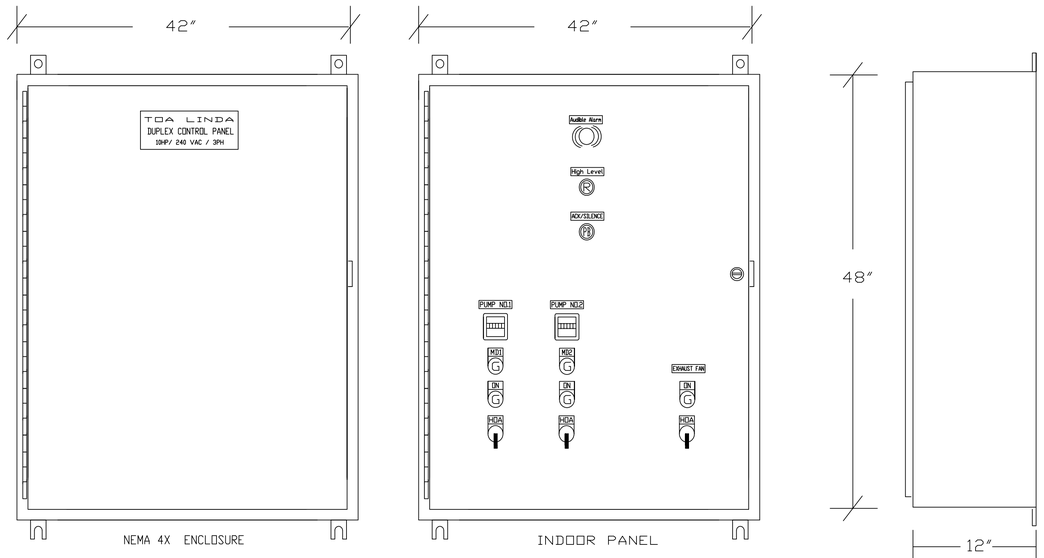

PUMPS CONTROL PANELS

SCALE: N.T.S.

COMMONWEALTH OF PUERTO RICO
DEPARTMENT OF NATURAL AND ENVIRONMENTAL RESOURCES
INFRASTRUCTURE PROJECTS DIVISION
THESE DOCUMENTS HAVE BEEN REVIEWED AND
APPROVED IN ACCORDANCE WITH THE REQUIREMENTS
OF THE CLEAN WATER STATE REVOLVING FUND PROGRAM

JAVIER VERARDI MATOS, PE
CHIEF

11/10/2026
DATE

30% DELIVERABLE

NO.	REMARKS	DATE	BY	APPV'D.

REVISIONS

AAF ENGINEERING, PSC
425 CARR 693 - PMB 269 - DORADO PR 00646

DESIGN-BUILD OF REHABILITATION OF WASTEWATER PUMP STATIONS- NORTH REGION (CWSRF-SAHFI)
TOA ALTA, PUERTO RICO
CIP NO. 2-00-9005

Autoridad de Acueductos y Alcantarillados
GOBIERNO DE PUERTO RICO

GOVERNMENT OF PUERTO RICO
AQUEDUCT AND SEWER AUTHORITY

SHEET TITLE:
TOA LINDA PUMP STATION
PROCESS & INSTRUMENTATION DIAGRAM (P&ID)

DRAFT BY: AAF ENGINEERING, PSC	DATE SEPT/2026	SCALE: H=1: 30
DESIGNED BY: AAF ENGINEERING, PSC	DATE SEPT/2026	DRWG NO. P&ID-03
REVISED BY: A.A.F.T.	DATE SEPT/2026	SHEET NO. 71 OF 74 SHEETS
SUBMITTED BY: AAF ENGINEERING, PSC	DATE SEPT/2026	–

WINDOW SCHEDULE

MKD	TYPE	WINDOW SIZE WIDTH	WINDOW SIZE HEIGHT	UNITS	REMARKS
①	I	3'–0"	4'–0"	???	FIXED ALUMINUM LOUVERS HEAVY DUTY VANDAL PROOF, 3.0 HOURS FIRE RATED WITH INSECT SCREEN

NOTES:

1. SEE SECTION 089000 – ALUMINUM LOUVERS, SUBSECTION 2.02 AND 2.03.

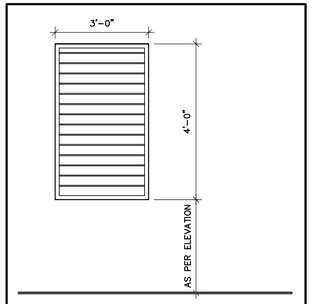

TYPE I WINDOW N.T.S.

ADJUSTABLE ALUMINUM LOUVERED WINDOW. COORDINATE WITH SUPPLIER HARDWARE AND FIRE RATED INSTALLATION

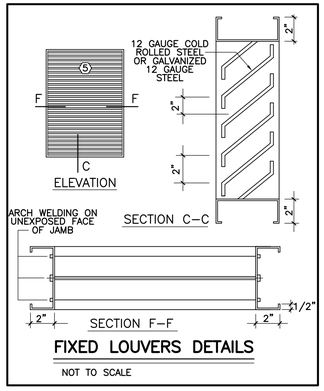

FIXED LOUVERS DETAILS

NOT TO SCALE

*FOR EACH DETAIL NUMBER LOCATION SEE DRAWING PS–03.

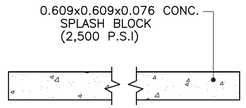

SPLASH BLOCK

N.T.S

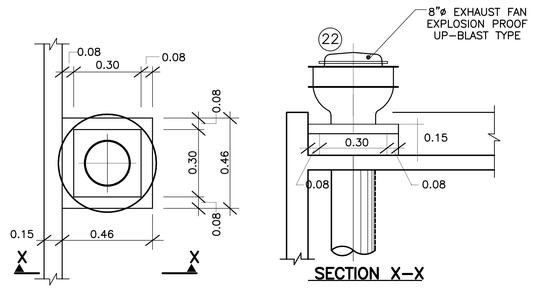

SECTION X–X

EXHAUST FAN INSTALLATION

N.T.S

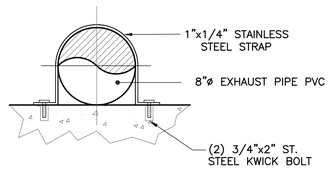

STAINLESS STEEL STRAP DETAIL

N.T.S

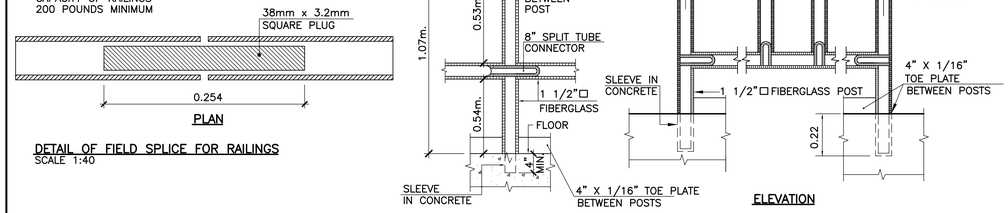

FIXED TYPE PIPE RAILING
N.T.S.

REMOVABLE TYPE PIPE RAILING
N.T.S.

SHALL COMPLY WITH OSHA STANDARD 29 CFR 1910.23 (e)(1)

SIGNS TO BE INSTALLED



SIGN (8"x11")
LETTERS 6"H x 3/4"W



LETTERS 3/4"W



LETTERS 3/4"W



LETTERS 3/4"W



LETTERS 3/4"W



LETTERS 3/4"W



LETTERS 3/4"W



PARCEL IDENTIFICATION SIGN (EXAMPLE)

ROTULO 1 (4"x20")

PELIGRO : NO ENTRE

A INSTALARSE A CADA LADO EN LA VERJA DEL PERIMETRO

ROTULO 2 (6"x20")

ESPACIO CONFINADO
NO ENTRE

A INSTALARSE EN LA TAPA DE ACCESO DEL AREA DE LAS BOMBAS

ROTULO 3 (6"x20")

DIESEL TANK
NO FUME

A INSTALARSE EN EL AREA DEL TANQUE

ROTULO 4 (4"x20")

PELIGRO : ALTO VOLTAGE

A INSTALARSE EN EL PANEL ELECTRICO DE LAS BOMBAS Y EN EL TRANSFER SWITCH

ROTULO 5 (8"x20")

EN CASO DE EMERGENCIA
FAVOR DE LLAMAR A:

A INSTALARSE FRENTE A LA CASETA DE BOMBAS

LETRAS DE 1–1/2" H x 1" COLOR NEGRO
PLACA SERA DE 1/16" T (ALUM.) BLANCO

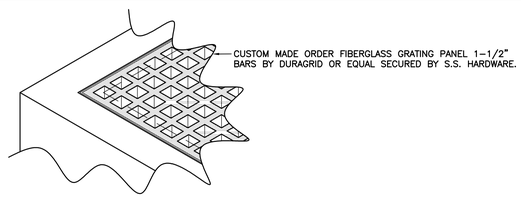

FIBERGLASS GRATING

N.T.S.

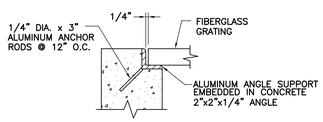

GRATING SUPPORT DETAIL

SCALE: NONE

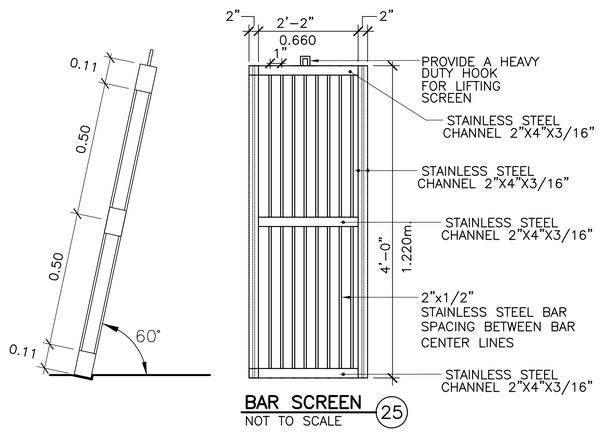

BAR SCREEN 25

NOT TO SCALE

COMMONWEALTH OF PUERTO RICO
DEPARTMENT OF NATURAL AND ENVIRONMENTAL RESOURCES
INFRASTRUCTURE PROJECTS DIVISION
THESE DOCUMENTS HAVE BEEN REVIEWED AND
APPROVED IN ACCORDANCE WITH THE REQUIREMENTS
OF THE CLEAN WATER STATE REVOLVING FUND PROGRAM

JAVIER VERARDI MATOS, PE
CHIEF

11/10/2026
DATE

30% DELIVERABLE

NO.	REMARKS	DATE	BY	APPV'D.

REVISIONS

AAF ENGINEERING, PSC
425 CARR 693 - PMB 269 - DORADO PR 00646

DESIGN-BUILD OF REHABILITATION OF WASTEWATER PUMP STATIONS-NORTH REGION (CWSRF-SAHFI)
TOA ALTA, PUERTO RICO
CIP NO. 2–00–9005

Autoridad de Acueductos y Alcantarillados
GOBIERNO DE PUERTO RICO

GOVERNMENT OF PUERTO RICO
AQUEDUCT AND SEWER AUTHORITY

SHEET TITLE: **PUMP STATION MISCELLANEOUS DETAILS**

DRAFT BY: AAF ENGINEERING, PSC	DATE SEPT/2026
DESIGNED BY: AAF ENGINEERING, PSC	DATE SEPT/2026
REVISED BY: A.A.F.T.	DATE SEPT/2026
SUBMITTED BY: AAF ENGINEERING, PSC	DATE SEPT/2026

SCALE: H=1: 30
DRWG NO. MD–01
SHEET NO. 72 OF 74 SHEETS
–

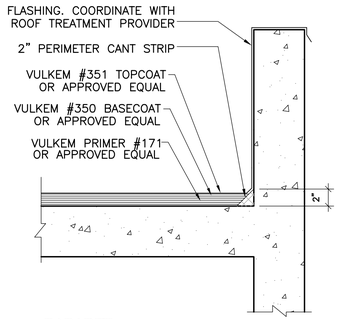

PARAPET
NOT TO SCALE

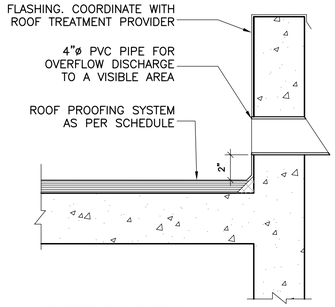

OVERFLOW DETAIL
NOT TO SCALE

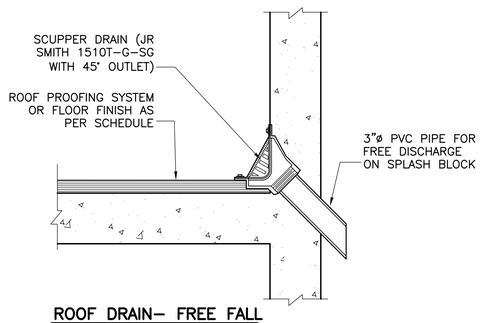

ROOF DRAIN– FREE FALL
NOT TO SCALE

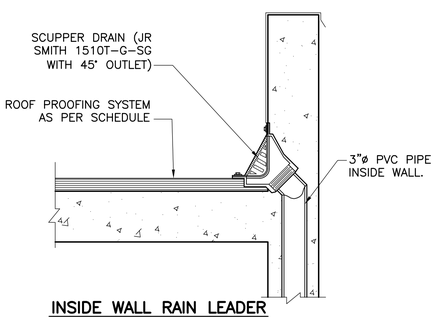

INSIDE WALL RAIN LEADER
NOT TO SCALE

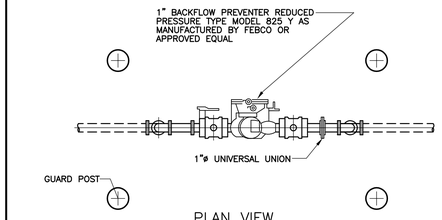

1"ø BACKFLOW PREVENTER VALVE DETAIL
(DOUBLE CHECK VALVE SEE SPECIFICATION 15100 & 224000)
N.T.S.

PAINT COLOR SCHEDULE

EXTERIORS:
- 1 SW 7067/CITY SCAPE
- 2 SW 7066/GRAY MATTERS (ENAMEL/METAL)
- 3 SW 7065/ARGOS
- 4 SW 7065/ARGOS (ENAMEL/METAL)
- 5 SW 6880/EMERGENTIC ORANGE (ENAMEL/METAL)

INTERIORS:
- Ⓐ WALLS & CEILING
  - 1 SW 7063/NEBULOUS WHITE
- Ⓑ FRAMES & METAL DOORS
  - 2 SW 7066/GRAY MATTERS (ENAMEL/METAL)
- Ⓒ HANDRAIL & METAL STRUCTURE
  - 4 SW 7065/ARGOS (ENAMEL/METAL)

IMPORTANT NOTES:

PAINT TO BE SHERWIN WILLIANS &/OR EQUAL
REFER TO PAINT SPECIFICATION FOR QUALITY & FINISH.

(#)(#) REFER TO LEGEND AT DRAWING PS–03 FOR PUMP STATION COMPONENTS

REFER TO PAINT, FINISHES, DOORS, WINDOWS AND DOOR HARDWARE AT DRAWING MD–01

COMMONWEALTH OF PUERTO RICO
DEPARTMENT OF NATURAL AND ENVIRONMENTAL RESOURCES
INFRASTRUCTURE PROJECTS DIVISION
THESE DOCUMENTS HAVE BEEN REVIEWED AND APPROVED IN ACCORDANCE WITH THE REQUIREMENTS OF THE CLEAN WATER STATE REVOLVING FUND PROGRAM

JAVIER VERARDI MATOS, PE
CHIEF
11/10/2026
DATE

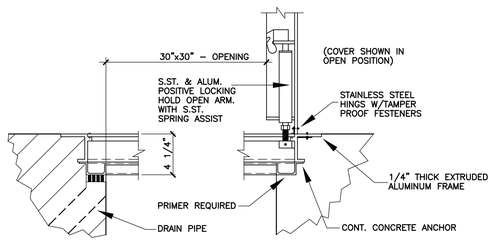

ACCESS HATCH
N.T.S. EQUAL TO HALLIDAY MODEL W1S

*FOR EACH DETAIL NUMBER LOCATION SEE DRAWING PS–03.

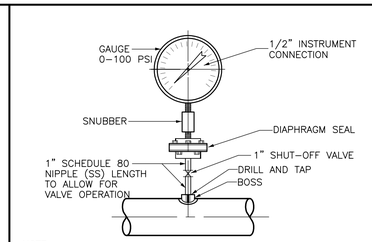

NOTE:
PRESSURE GAUGE SHALL BE INSTALLED AT ALL PUMP SUCTION AND DISCHARGE CONNECTIONS; AND BEFORE AND AFTER THE PRESSURE REDUCING VALVES. PROVIDED DIAPHRAGM AS SPECIFIED.

ELEVATION

PRESSURE GAUGE CONNECTION (8)

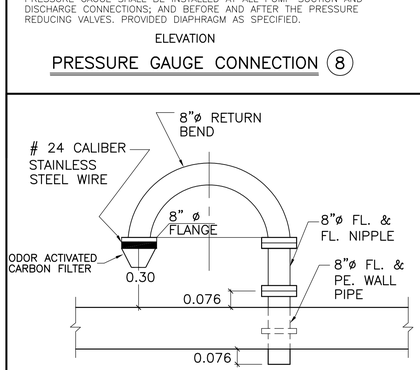

VENTILATOR DETAIL
NOT TO SCALE

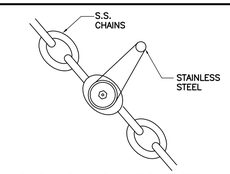

S.S. SHACKLES DETAIL (14)
NOT TO SCALE

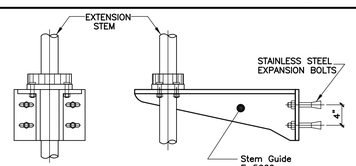

STEM GUIDE (CLOW)
N.T.S.

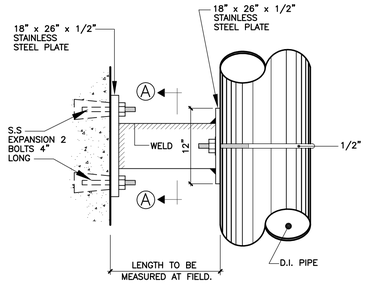

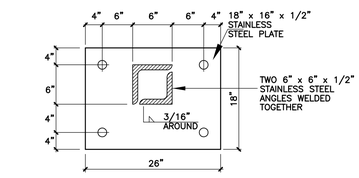

SECTION A–A

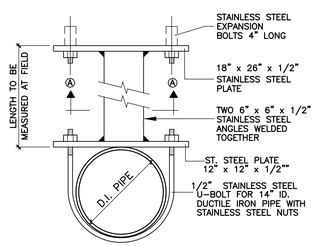

DETAILS OF INTERMEDIATE BRACKET FOR GUIDE BAR OR PUMP DISCHARGE PIPE
NOT TO SCALE

(CONSULT MANUFACTURER FOR QUANTITY OF GUIDE BAR BRACKET)

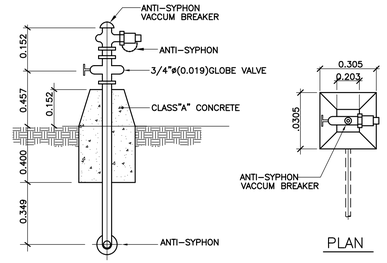

HOSE BIBB DETAILS
N.T.S.

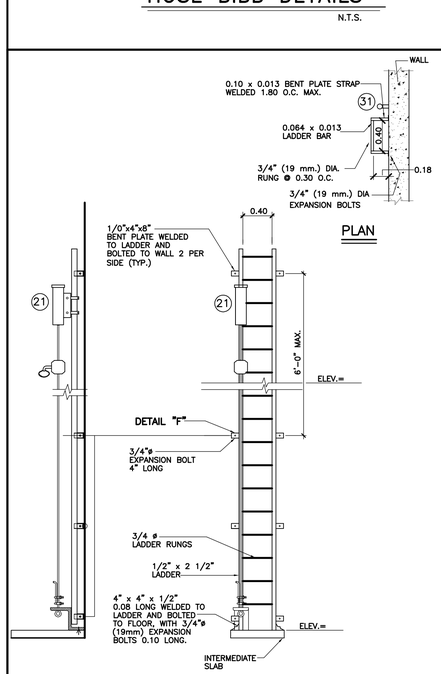

FIBERGLASS LADDER FALL ARREST DETAIL
NOT TO SCALE

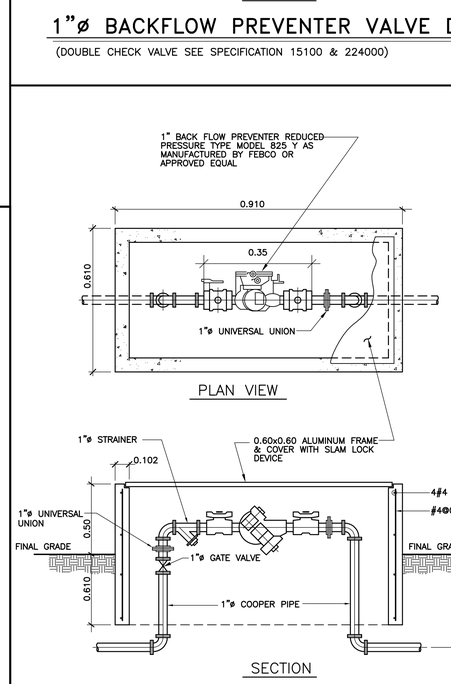

1"ø BACKFLOW PREVENTER VALVE DETAIL
(DOUBLE CHECK VALVE SEE SPECIFICATION 15100 & 224000)
N.T.S.

30% DELIVERABLE

NO.	REMARKS	DATE	BY	APPV'D.

REVISIONS

AAF ENGINEERING, PSC
425 CARR 693 - PMB 269 - DORADO PR 00646

DESIGN-BUILD OF REHABILITATION OF WASTEWATER PUMP STATIONS-NORTH REGION (CWSRF-SAHFI)
TOA ALTA, PUERTO RICO
CIP NO. 2–00–9005

Autoridad de Acueductos y Alcantarillados
GOBIERNO DE PUERTO RICO

GOVERNMENT OF PUERTO RICO
AQUEDUCT AND SEWER AUTHORITY

SHEET TITLE: **PUMP STATION MISCELLANEOUS DETAILS**	SCALE: NTS
DRAFT BY: AAF ENGINEERING, PSC	DATE: SEPT/2026
DESIGNED BY: AAF ENGINEERING, PSC	DATE: SEPT/2026
REVISED BY: A.A.F.T.	DATE: SEPT/2026
SUBMITTED BY: AAF ENGINEERING, PSC	DATE: SEPT/2026
DRWG NO. MD–02	SHEET NO. 73 OF 74 SHEETS
	–

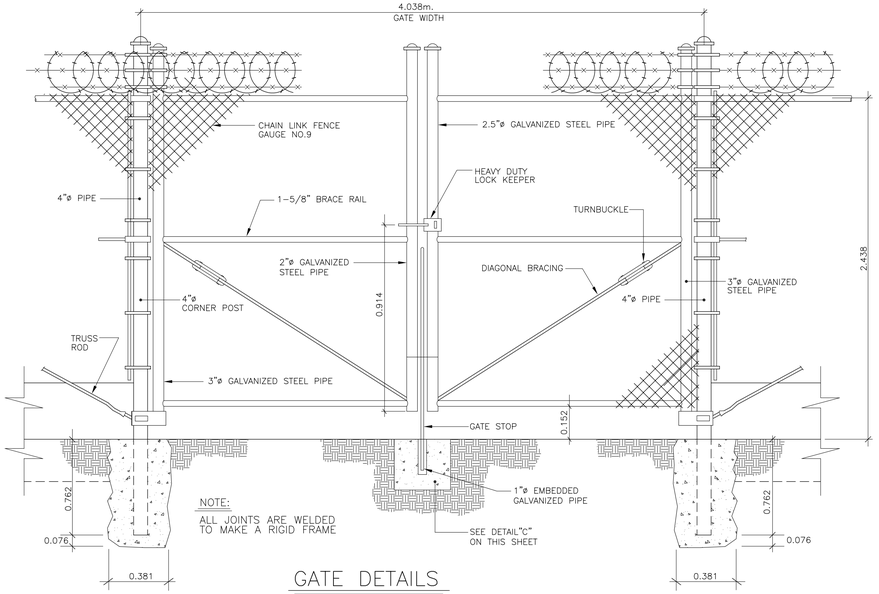

GATE DETAILS

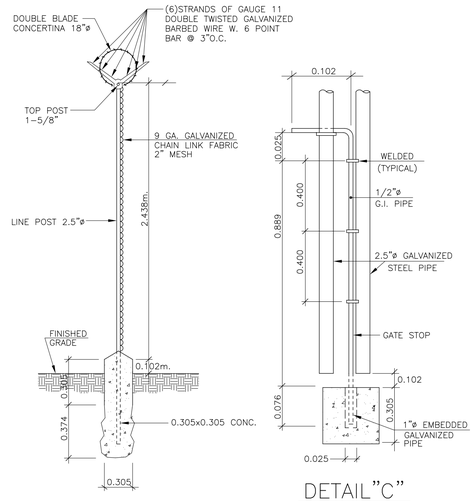

INTERMEDIATE POST
SECTION

N.T.S.

DETAIL"C"

N.T.S.

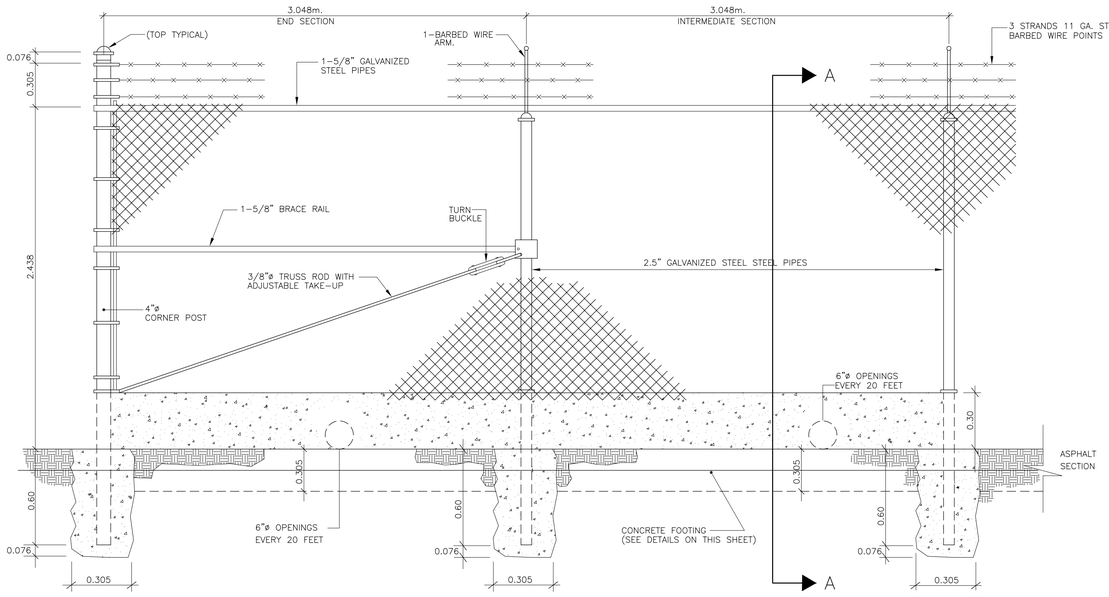

CORNER & INTERMEDIATE FENCE DETAILS

N.T.S.

NOTES:

1-ALUMINUM TIE WIRE AND STEEL STRAPS SHALL BE USED TO FIX CYCLONE FENCE TO POST AND PIPES TIE SHALL BE @ 0.609 MTS O.C. ON PIPES AND 0.349 MTS C.C. ON POST LINES.

2- ALL MECHANIC GATES SHALL HAVE OBSTRUCTION DETECTORS TO STOP CLOSING FOR SAFETY.

3-THE CONTRACTOR SHALL PROVIDE 6"ø OPENINGS EVERY 20 FEET AT THE BASE OF THE FENCE FOR THE DISPOSAL OF THE RAIN WATER.

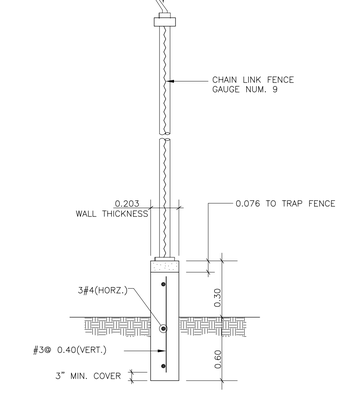

SECTION A-A

CHAIN LINK FENCE AROUND THE LOT

N.T.S.

COMMONWEALTH OF PUERTO RICO
DEPARTMENT OF NATURAL AND ENVIRONMENTAL RESOURCES
INFRASTRUCTURE PROJECTS DIVISION
THESE DOCUMENTS HAVE BEEN REVIEWED AND
APPROVED IN ACCORDANCE WITH THE REQUIREMENTS
OF THE CLEAN WATER STATE REVOLVING FUND PROGRAM

JAVIER VERARDI MATOS, PE
CHIEF

11/10/2026
DATE

30% DELIVERABLE

NO.	REMARKS	DATE	BY	APPV'D.

REVISIONS

AAF ENGINEERING, PSC
425 CARR 693 - PMB 269 - DORADO PR 00646

DESIGN-BUILD OF REHABILITATION OF WASTEWATER PUMP STATIONS-NORTH REGION (CWSRF-SAHFI)

TOA ALTA, PUERTO RICO

CIP NO. 2-00-9005

Autoridad de Acueductos y Alcantarillados
GOBIERNO DE PUERTO RICO

GOVERNMENT OF PUERTO RICO

AQUEDUCT AND SEWER AUTHORITY

SHEET TITLE:		SCALE:
PUMP STATION CHAIN LINK FENCE DETAILS DETAILS		NTS
DRAFT BY: AAF ENGINEERING, PSC	DATE SEPT/2026	DRWG NO. MD-03
DESIGNED BY: AAF ENGINEERING, PSC	DATE SEPT/2026	SHEET NO. 74 OF 74 SHEETS
REVISED BY: A.A.F.T.	DATE SEPT/2026	
SUBMITTED BY: AAF ENGINEERING, PSC	DATE SEPT/2026	–