Sheet Template ID: OPE-F-07-B

File: P:\pr\65-San Juan\2200.0 Pier 14 Infrastructure Improvements\01-Working Files\01-Site\C201 WATER DISTRIBUTION SYSTEM PLAN; Plotted: 9/17/2026 12:41 PM by RMELENDEZ; Saved: 9/17/2026 12:12 PM by RMELENDEZ

## ENLARGED WATER METER BANK & TAPPING PARTIAL SITE PLAN

SCALE= 1:400

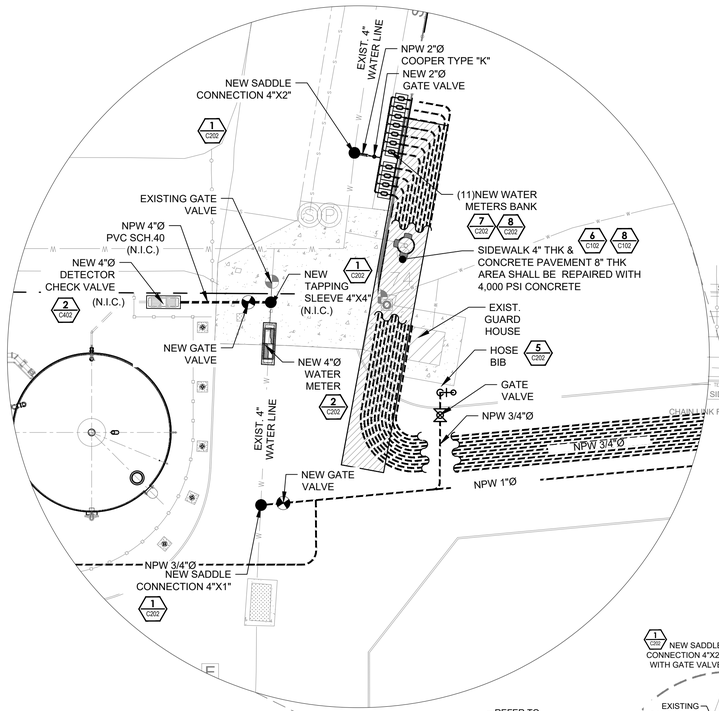


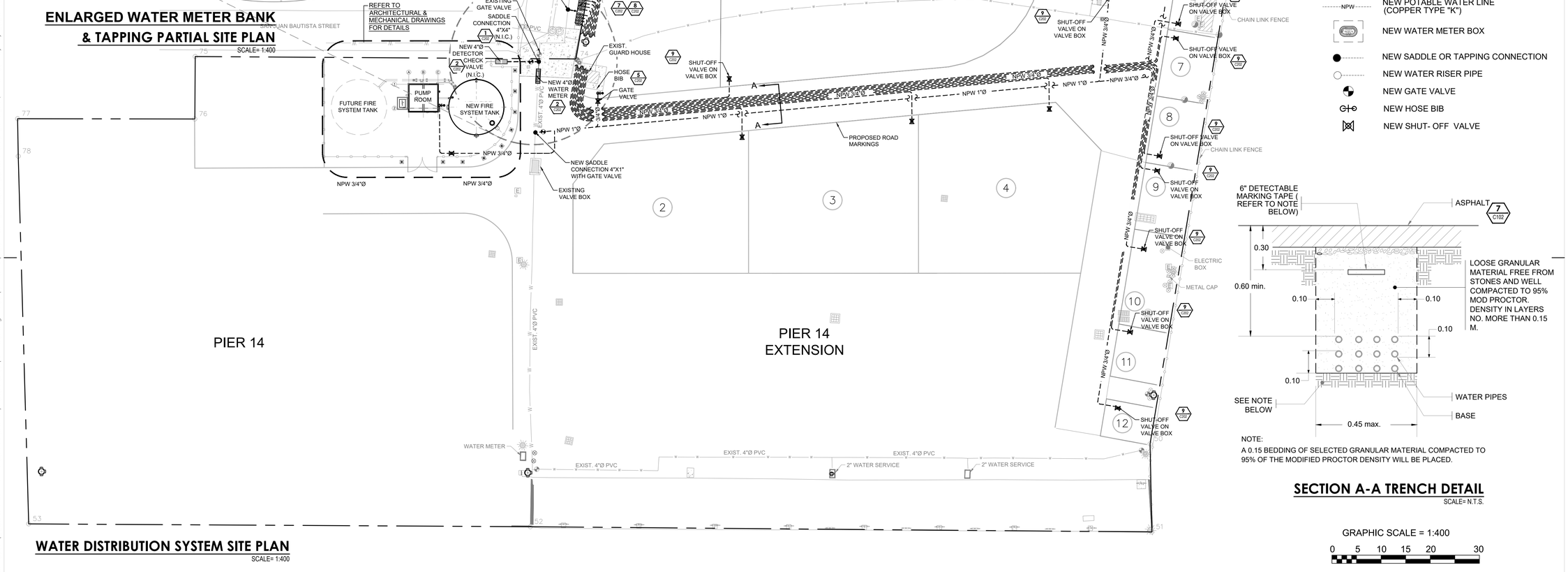


## WATER DISTRIBUTION SYSTEM SITE PLAN

SCALE= 1:400

## LEGEND:

- PROJECT LIMIT
- EXISTING FIRE HYDRANT
- EXISTING POTABLE WATER LINE
- NEW MAIN WATER METER
- NEW POTABLE WATER LINE (COPPER TYPE "K")
- NEW WATER METER BOX
- NEW SADDLE OR TAPPING CONNECTION
- NEW WATER RISER PIPE
- NEW GATE VALVE
- NEW HOSE BIB
- NEW SHUT- OFF VALVE




NOTE:
A 0.15 BEDDING OF SELECTED GRANULAR MATERIAL COMPACTED TO 95% OF THE MODIFIED PROCTOR DENSITY WILL BE PLACED.

## SECTION A-A TRENCH DETAIL

SCALE= N.T.S.

GRAPHIC SCALE = 1:400

0 5 10 15 20 30

**AAA-RM-25-65-0048**
**OGPE: 2025-632965-SRI-316649**

INTEGRA DESIGN GROUP PSC
(787) 767.2111 www. integrapr.com

THIS DOCUMENT, ITS CONTENT AND CONCEPT ARE THE SOLE PROPERTY OF INTEGRA. USE, REPRODUCTION, OR MODIFICATION OF ANY PART OR ENTIRELY ARE EXPRESSLY PROHIBITED. EXCEPT AS AGREED IN WRITING.
© INTEGRA DESIGN GROUP PSC

YO, _____, NUMERO DE LICENCIA _____, CERTIFICO QUE SOY EL PROFESIONAL QUE DISEÑO ESTOS PLANOS Y LAS ESPECIFICACIONES COMPLEMENTARIAS. TAMBIEN CERTIFICO QUE ENTIENDO QUE DICHOS PLANOS Y ESPECIFICACIONES CUMPLEN CON LAS DISPOSICIONES APLICABLES DEL REGLAMENTO CONJUNTO Y LAS DISPOSICIONES APLICABLES DE LOS REGLAMENTOS Y CODIGOS DE LAS AGENCIAS, JUNTAS REGLAMENTADORAS O CORPORACIONES PUBLICAS CON JURISDICCION. RECONOZCO QUE CUALQUIER DECLARACION FALSA O FALSIFICACION DE LOS HECHOS QUE SE HAYA PRODUCIDO SIN CONOCIMIENTO O POR NEGLIGENCIA YA SEA POR MI, MIS AGENTES O EMPLEADOS, O POR OTRAS PERSONAS CON MI CONOCIMIENTO, ME HACEN RESPONSABLE DE CUALQUIER ACCION JUDICIAL Y DISCIPLINARIA POR LA OGPe Y OTRAS AUTORIDADES COMPETENTES, INCLUYENDO, PERO SIN LIMITARSE, A LA TERMINACION DE LA PARTICIPACION EN LOS PROCEDIMIENTOS DE CERTIFICACION PROFESIONAL EN LA OGPe.

Seal:

AUTORIDAD de los PUERTOS de PUERTO RICO

Revisions:

| Number | Date | Description |
|---|---|---|
| | | |

Project Title:
PIER 14
INFRASTRUCTURE
IMPROVEMENTS

FERNANDEZ JUNCOS AVENUE, KM. 2.1
SAN JUAN, PUERTO RICO

Client: AUTORIDAD DE PUERTOS DE P.R.

Project No.: 2200.0

Drawing Title:
**WATER DISTRIBUTION SYSTEM SITE PLAN**

SET ISSUE DATE
SEPT.-17-2026
BID PHASE

Sheet:
**C201**

Sheet Template ID: OPE-F-07-B
File: P:\pr\65-San Juan\2200.0 Pier 14 Infrastructure Improvements\01-Working Files\01-Site\C202 WATER DISTRIBUTION SYSTEM DETAILS ; Plotted: 9/17/2026 12:15 PM by RMELENDEZ; Saved: 9/17/2026 12:06 PM by RMELENDEZ

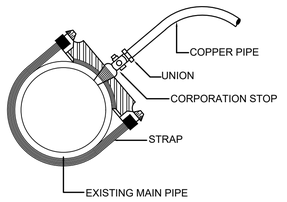


NOT TO SCALE

## PIPE TAPPING SADDLE DETAIL | 1

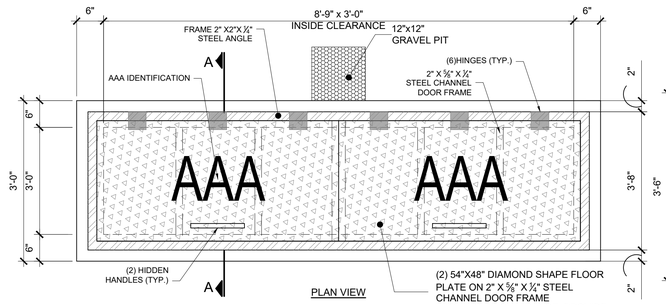


PLAN VIEW

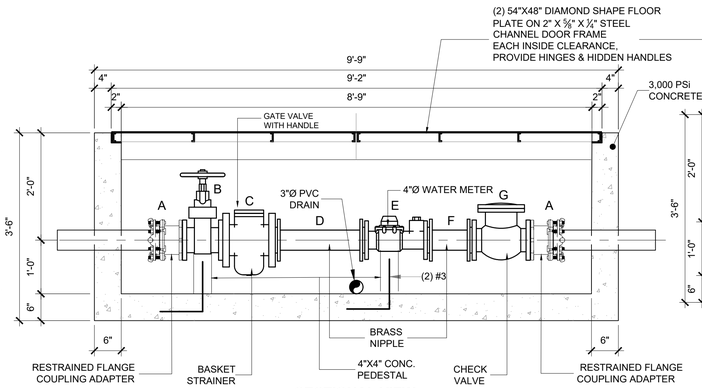


SECTIONAL VIEW

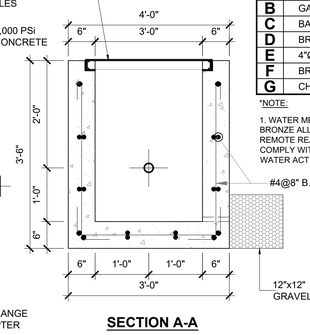


SECTION A-A

**2"ØWATER METER SCHEDULE OF ITEMS**

| | | LENGTH |
|---|---|---|
| A | MALE ADAPTER, FLARE AND FL | 6 1/2" |
| B | GATE VALVE, NRS W/HANDLE, FL & FL | 7" |
| C | BASKET STRAINER, FL & FL | 8 1/8" |
| D | BRASS NIPPLE, FL & FL | 20" |
| E | 4"Ø WATER METER, FL & FL* | 11" |
| F | BRASS NIPPLE, FL & FL | 6" |
| G | CHECK VALVE, FL & FL | 4" |

*NOTE:

1. WATER METER TO BE EQUAL OR SIMILAR TO BADGER METER E-SERIES BRONZE ALLOY CONSTRUCTION. ULTRASONIC MESUREMENT AND REMOTE READING (AMR). THE LEAD-FREE BRONZE ALLOY METERS COMPLY WITH THE LEAD-FREE PROVISIONS OF THE SAFE DRINKING WATER ACT AND NSF/ANSI/CAN STANDARDS 61 AND 372.

NOT TO SCALE

## STANDARD 4"Ø WATER METER DETAILS | 2

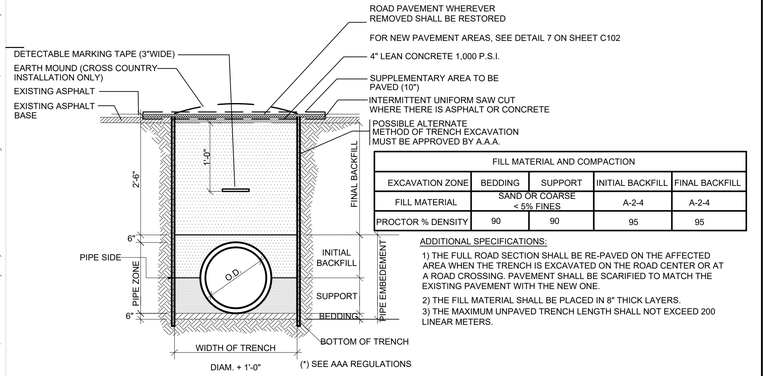


| FILL MATERIAL AND COMPACTION | | | | |
|---|---|---|---|---|
| EXCAVATION ZONE | BEDDING | SUPPORT | INITIAL BACKFILL | FINAL BACKFILL |
| FILL MATERIAL | SAND OR COARSE < 5% FINES | | A-2-4 | A-2-4 |
| PROCTOR % DENSITY | 90 | 90 | 95 | 95 |

ADDITIONAL SPECIFICATIONS:

1) THE FULL ROAD SECTION SHALL BE RE-PAVED ON THE AFFECTED AREA WHEN THE TRENCH IS EXCAVATED ON THE ROAD CENTER OR AT A ROAD CROSSING. PAVEMENT SHALL BE SCARIFIED TO MATCH THE EXISTING PAVEMENT WITH THE NEW ONE.

2) THE FILL MATERIAL SHALL BE PLACED IN 8" THICK LAYERS.

3) THE MAXIMUM UNPAVED TRENCH LENGTH SHALL NOT EXCEED 200 LINEAR METERS.

NOT TO SCALE

## TRENCH DETAIL FOR WATER LINE | 3

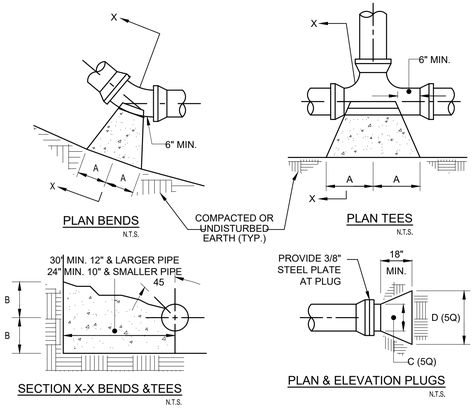


PLAN BENDS
N.T.S.




PLAN TEES
N.T.S.




SECTION X-X BENDS &TEES
N.T.S.




PLAN & ELEVATION PLUGS
N.T.S.

| SIZE | 90° BENDS | | 45° BENDS | | 22.5° BENDS | | TEES | | PLUGS | |
|---|---|---|---|---|---|---|---|---|---|---|
| | A | B | A | B | A | B | A | B | C | D |
| 2" | 3" | 6" | 3" | 3" | 3" | 3" | 3" | 4" | 6" | 6" |
| 4" | 12" | 9" | 9" | 9" | 6" | 9" | 9" | 9" | 9" | 9" |
| 6" | 16" | 10" | 9" | 10" | 6" | 8" | 10" | 12" | 10" | 21" |
| 8" | 22" | 13" | 12" | 13" | 8" | 10" | 13" | 16" | 12" | 29" |
| 10" | 26" | 17" | 14" | 17" | 10" | 13" | 16" | 20" | 14" | 36" |
| 12" | 29" | 21" | 16" | 21" | 11" | 16" | 18" | 24" | 16" | 41" |
| 14" | 35" | 24" | 19" | 24" | 12" | 20" | 22" | 27" | 18" | 48" |
| 16" | 38" | 27" | 21" | 27" | 12" | 24" | 24" | 30" | 20" | 54" |

NOTE:

1. BLOCKSIZE BASED UPON 350 PSI TEST PRESSURE AND 2000 PSF PASSIVE LATERAL PRESSURE.
2. CONCRETE 3,000 PSI.

NOT TO SCALE

## CONCRETE THRUST BLOCK DETAILS | 4

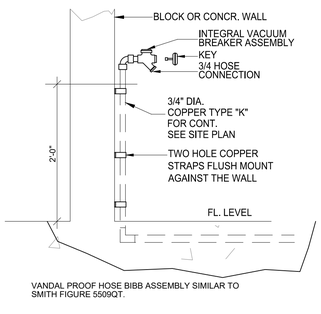


VANDAL PROOF HOSE BIBB ASSEMBLY SIMILAR TO SMITH FIGURE 5509QT.

NOT TO SCALE

## WALL RECESSED HOSE BIBB INSTALLATION DETAIL | 5

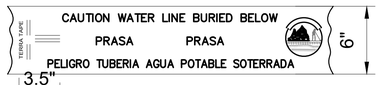


REPEAT PATERN EVERY 26" – 36" INCHES

COLOR: BLUE
IMPRINT: BLACK
MATERIAL: ALUMINUM FOIL LAMINATED BETWEEN TWO LAYERS OF INERT PLASTIC FILM

NOT TO SCALE

## 6" DETECTABLE MARKING TAPE | 6

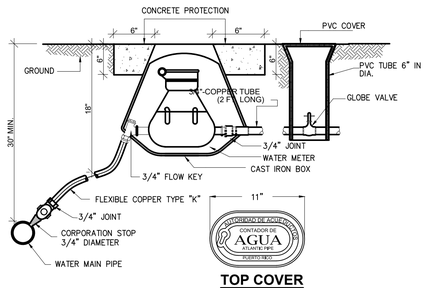


TOP COVER

NOT TO SCALE

## 5/8" Ø WATER METER INSTALLATION DETAIL | 7

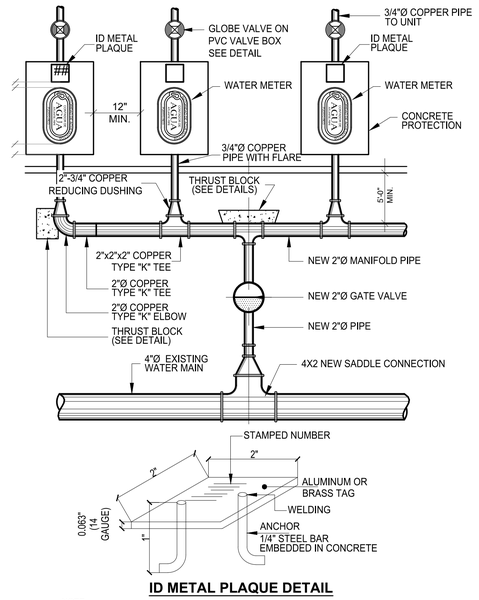


NOTE:

1. INCLUDE AN ID METAL PLAQUE FOR EACH WATER METER.

NOT TO SCALE

## TYPICAL WATER METER CONNECTION DETAIL | 8

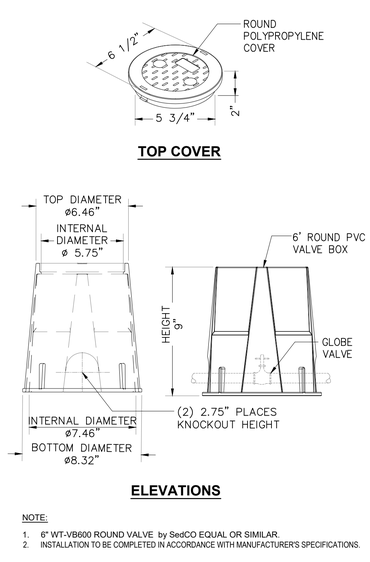


TOP COVER




ELEVATIONS

NOTE:

1. 6" WT-VB600 ROUND VALVE by SedCO EQUAL OR SIMILAR.
2. INSTALLATION TO BE COMPLETED IN ACCORDANCE WITH MANUFACTURER'S SPECIFICATIONS.

NOT TO SCALE

## 6" PVC VALVE BOX DETAIL | 9




ID METAL PLAQUE DETAIL

NOT TO SCALE

## TYPICAL WATER METER CONNECTION DETAIL | 8

1. THE WATER METER BOXES MUST BE INSTALLED OUT OF THE ROADWAY, PARKING OR MOTOR VEHICLES ACCESS RAMPS.
2. THE WATER METER BOXES MUST BE INSTALLED OUT OF PROPERTY LIMITS.
3. THE LOCATION OF EXISTING WATER LINES IN THESE PLANS ARE APPROXIMATE, THE CONTRACTOR SHALL CONFIRM THE LOCATION OF THE EXISTING WATER PIPE BEFORE ANY NEW CONNECTION WORKS BEGINS.
4. THE WATER METER MUST BE CALIBRATED IN CUBIC METERS.
5. THE WATER METER BOX MUST BE INSTALLED AT A SAFE AND ADEQUATE DISTANCE FROM ELECTRIC EQUIPMENT.
6. THE DISTANCE BETWEEN THE WATER SERVICE CONNECTION AND THE SANITARY SEWER CONNECTION MUST BE MORE OR EQUAL THAN 5 FEET. THE INSTALLATION OF BOTH SERVICES IN THE SAME TRENCH IS NOT PERMITTED.
7. ALL VALVES SHALL BE RE-SET TO FINAL GRADE ELEVATIONS.
8. THE WATER METERS MUST BE INSTALLED USING COPPER TYPE "K" OR BRONZE PIPE OF EQUAL COMPLIANCE.
9. THE FITTING USED TO INSTALL THE WATER METER MUST BE THREADED OR FLARED TYPE, WELDED FITTINGS ARE NOT ALLOWED FOR THE METER INSTALLATION.
10. THE PROJECT MUST BE PAVED FOR THE FINAL PRASA VALIDATION INSPECTION AND ACCEPTANCE.
11. THE CONTRACTOR SHALL OBTAIN APPROVAL OF THE PROPOSED MATERIALS PRIOR TO THE PURCHASE.
12. ALL CONNECTIONS MUST BE DONE BY A CERTIFIED PLUMBER OR UNDER HIS SUPERVISION.
13. WATER SERVICE SHALL NOT BE INTERRUPTED AT ANY TIME DURING CONSTRUCTION. IF NECESSARY, A PROVISIONAL TEMPORARY BY-PASS MAY BE INSTALLED TO MAINTAIN THE SERVICE.
14. THE CONTRACTOR SHALL TAKE EXTREME CARE SO AS NOT TO DISRUPT THE WATER SERVICE DURING THE EARTH WORK.
15. THE CONTRACTOR SHALL NOT TAKE WATER FROM THE PRASA'S WATER SYSTEM FOR SPRINKLING OR CONTROLLING DUST DURING CONSTRUCTION.
16. A DETECTABLE RIBBON SHALL BE INSTALLED OVER THE WATER PIPE EQUAL OR SIMILAR TO AS MANUFACTURED BY REEF INDUSTRIES, INC. COMPANY. IT WILL BE INSTALLED AT A DEPTH OF 12" UNDER GROUND LEVEL, PARALLEL AND DIRECTLY OVER THE PIPE.
17. THRUST BLOCKS SHALL BE PROVIDED TO ALL FITTING, ELBOWS, TEES , WYES OR WHERE A CHANGE OF THE PIPE DIRECTION HAPPENS.
18. AN EXPLORATORY EXCAVATION CAN BE REQUESTED BY PRASA INSPECTOR TO VERIFY DEPTH AND MATERIALS OF THE INSTALLED PIPE. THE CONTRACTOR WILL REQUEST THE CORRESPONDING INSPECTION BEFORE PAVING THE STREETS.
19. THE CONTRACTOR OR DEVELOPER WILL SUBMIT EVIDENCE OF PAYMENT FOR THE SYSTEM CONNECTION BEFORE THE FINAL ENDORSEMENT OF THE PROJECT.
20. ALL CONNECTION FITTINGS LIKES TEES, VALVES, BENDS, END CAPS, ETC. SHALL BE CAST IRON. THE PIPE SHALL BE INSTALLED AT A DISTANCE OF 1.50M. FROM THE CURB OR 1.00M. FROM THE ASPHALT BORDER, TO STREET CENTERLINE, WITH A DEPTH OF 0.75M. FROM THE GROUND LEVEL UNTIL PIPE UPPER LEVEL.
21. WHEN THE AQUEDUCT WORKS BEGINS, THE PROPONENT OR THE OWNER SHALL NOTIFY IN WRITING TO PRASA'S OFFICE.
22. PRASA RESERVES THE RIGHT TO REQUIRE ANY PERTINENT CHANGE THAT BY OMISSION OR INVOLUNTARY ERROR WASN'T INCLUDED IN THE PROJECT AND IN ITS OPINION, IT IS NECESSARY FOR THE GOOD OPERATION OF THE AQUEDUCT SYSTEM.
23. THE WATER SERVICE PIPE SHOULD BE INSTALLED AT THE OPPOSITE SIDE OF THE ELECTRIC , TELEPHONE OR CABLE CONDUITS.
24. PRESSURE TEST OF 150 PSI MINIMUM IS REQUIRED TO ALL PIPES INSTALLED AND IT SHALL BE PERFORMED BY CONTRACTOR AND CERTIFIED BY PRIVATE SYSTEM PERSONNEL. THE TEST WILL BE PERFORMED DURING A MINIMUM OF 15 MINUTES AND IN THE PRESENCE OF PRASA PERSONNEL TO VALIDATE THE TEST.
25. THE EQUIPMENTS TO PERFORM THE PRESSURE TEST SHOULD BE PROVIDED BY THE PROJECT CONTRACTOR OR PLUMBER. FOR 150PSI PRESSURES, THE MANOMETER SCALE SHOULDN'T EXCEEDS 200PSI.
26. ANY NECESSARY CHANGE TO THE INDICATED IN THIS PLANS OR IN THE PRASA ENDORSEMENT LETTER, SHOULD BE CONSULTED AND EVALUATED WITH PRASA FOR THE APPROVAL BEFORE THE EXECUTION OF THE WORKS.
27. THE EXPOSED CONNECTION PIECES INSIDE THE WATER METER BOX WILL BE DUCTILE OR CAST IRON.
28. THE EXPOSED CONNECTION PIECES INSIDE THE WATER METER BOX WILL BE COATING WITH ANTI CORROSIVE PAINT.
29. IN CASE THAT THE WATER TABLE IS HIGH, THE WATER METER WILL BE INSTALLED ABOVE THE GROUND LEVEL WHERE SPECIFIED BY PRASA.
30. THE GENERAL AND INDIVIDUAL WATER METER BOXES WILL BE RESPONSIBILITY OF PRASA, THE PROJECT OWNER OR THE PROJECT RESIDENTS ASSOCIATION WILL BE RESPONSIBLE OF THE CONSERVATION AND MAINTENANCE OF ALL THE INSTALLATION BETWEEN THE GENERAL CONTRACTOR AND INDIVIDUAL CONTRACTOR.
31. THE PROJECT OWNER AND THE RESIDENTS ASSOCIATION WILL BE RESPONSIBLE OF THE CONSERVATION, OPERATION AND MAINTENANCE OF THE WATER PRESSURE HYDRONEUMATIC SYSTEM OF THE PROJECT.
32. ALL THE SERVICE CONNECTIONS WILL BE INSTALLED WITH CLAMPS AND CORPORATION STOP.
33. THE EXPOSED CONNECTION PIECES INSIDE THE WATER METER BOX WILL BE METALLIC.
34. THE WATER METER MUST BE INSTALLED SO THAT THE METER CAN BE READER EASILY WHEN LIFTING THE COVER.
35. ANY NECESSARY CHANGE DIFFERENT TO THE SPECIFIED IN THIS PLANS OR IN THE APPROVED LETTER, RELATED OF THE GENERAL WATER METER, MUST BE CONSULTED AND EVALUATED WITH THE PRASA OFFICE FOR APPROVAL BEFORE ANY CONSTRUCTION OR DEVELOPMENT.

## GENERAL WATER NOTES | 10

**AAA-RM-25-65-0048**
**OGPE: 2025-632965-SRI-316649**

INTEGRA DESIGN GROUP PSC
(787) 767.2111 www. integrapr.com

THIS DOCUMENT, ITS CONTENT AND CONCEPT ARE THE SOLE PROPERTY OF INTEGRA. USE, REPRODUCTION, OR MODIFICATION OF ANY PART OR ENTIRELY ARE EXPRESSLY PROHIBITED. EXCEPT AS AGREED IN WRITING.
© INTEGRA DESIGN GROUP PSC

YO, _____, NUMERO DE LICENCIA _____, CERTIFICO QUE SOY EL PROFESIONAL QUE DISEÑO ESTOS PLANOS Y LAS ESPECIFICACIONES COMPLEMENTARIAS, TAMBIEN CERTIFICO QUE ENTIENDO QUE DICHOS PLANOS Y ESPECIFICACIONES CUMPLEN CON LAS DISPOSICIONES APLICABLES DEL REGLAMENTO CONJUNTO Y LAS DISPOSICIONES APLICABLES DE LOS REGLAMENTOS Y CODIGOS DE LAS AGENCIAS, JUNTAS REGLAMENTADORAS O CORPORACIONES PUBLICAS CON JURISDICCION. RECONOZCO QUE CUALQUIER DECLARACION FALSA O FALSIFICACION DE LOS HECHOS QUE SE HAYA PRODUCIDO SIN CONOCIMIENTO O POR NEGLIGENCIA YA SEA POR MI, MIS AGENTES O EMPLEADOS, O POR OTRAS PERSONAS CON MI CONOCIMIENTO, ME HACEN RESPONSABLE DE CUALQUIER ACCION JUDICIAL Y DISCIPLINARIA POR LA OGPe Y OTRAS AUTORIDADES COMPETENTES, INCLUYENDO, PERO SIN LIMITARSE, A LA TERMINACION DE LA PARTICIPACION EN LOS PROCEDIMIENTOS DE CERTIFICACION PROFESIONAL EN LA OGPe.

Seal:

Revisions:

| Number | Date | Description |
|---|---|---|
| 1 | JULY-23-2026 | GENERAL CHANGES |

Project Title:
PIER 14
INFRASTRUCTURE
IMPROVEMENTS

FERNANDEZ JUNCOS AVENUE, KM. 2.1
SAN JUAN, PUERTO RICO

Client: AUTORIDAD DE PUERTOS DE P.R.

Project No.: 2200.0

Drawing Title:
**WATER DISTRIBUTION SYSTEM DETAILS**

SET ISSUE DATE
▶ SEPT.-17-2026 ◀
BID PHASE

Sheet:
**C202**

Sheet Template ID: OPE-F-07-B

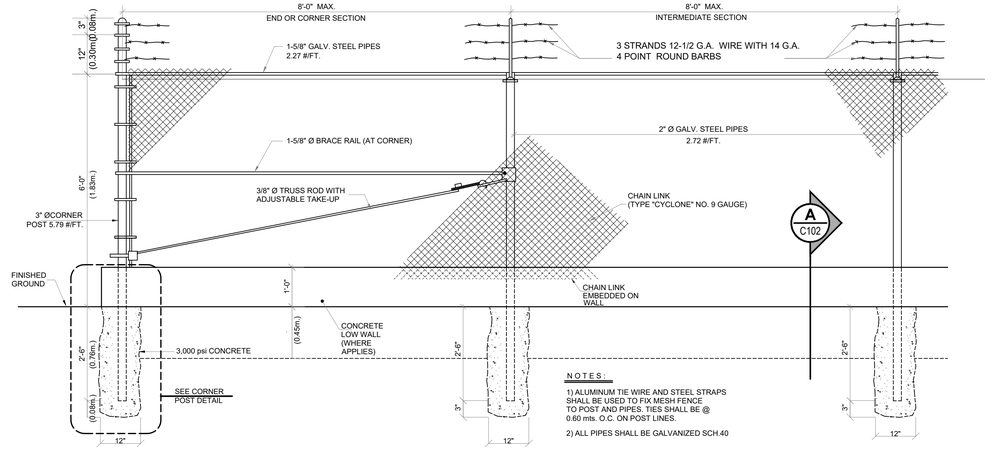


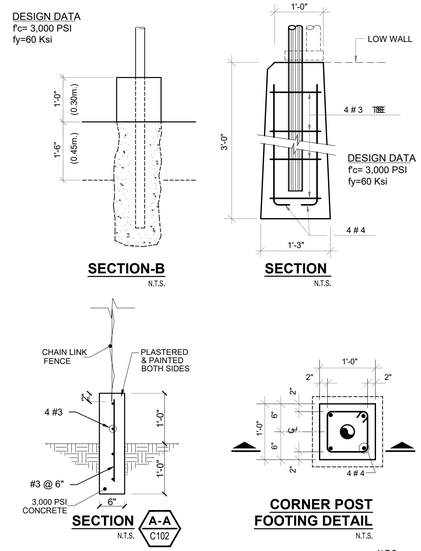


N.T.S.

## CHAIN LINK FENCE DETAILS | 1

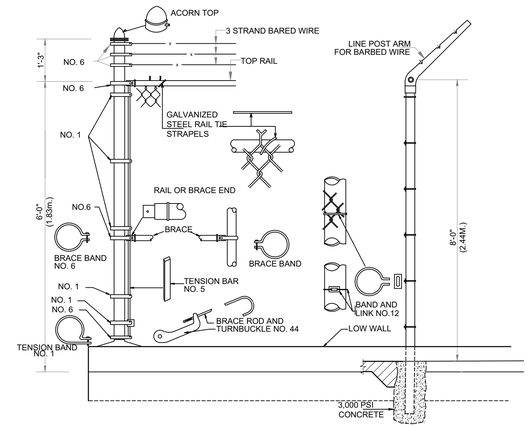


N.T.S.

## CHAIN LINK FENCE DETAIL | 2

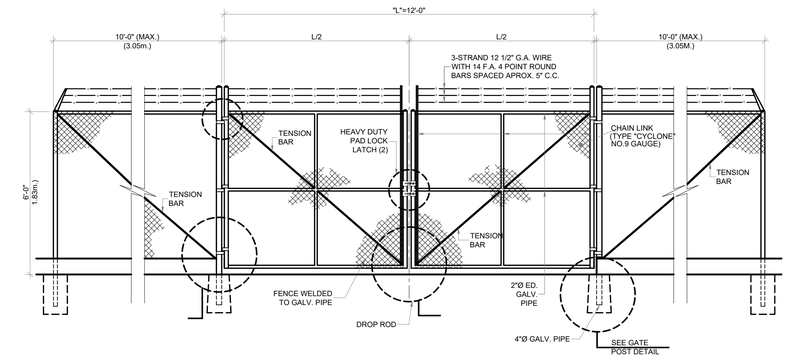


N.T.S.

## ENTRANCE GATE DETAIL | 3

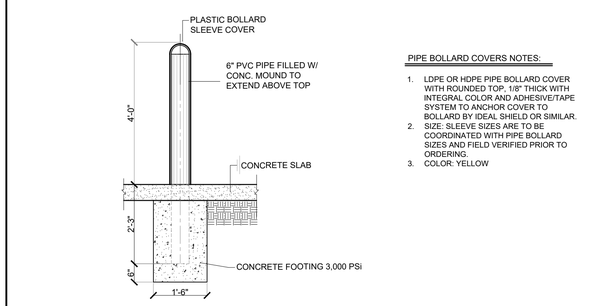


PIPE BOLLARD COVERS NOTES:

1. LDPE OR HDPE PIPE BOLLARD COVER WITH ROUNDED TOP, 1/8" THICK WITH INTEGRAL COLOR AND ADHESIVE/TAPE SYSTEM TO ANCHOR COVER TO BOLLARD BY IDEAL SHIELD OR SIMILAR.
2. SIZE: SLEEVE SIZES ARE TO BE COORDINATED WITH PIPE BOLLARD SIZES AND FIELD VERIFIED PRIOR TO ORDERING.
3. COLOR: YELLOW

N.T.S.

## CONCRETE FILLED STEEL PIPE BOLLARD | 4

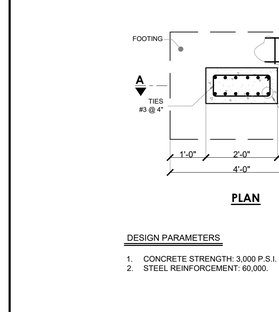


DESIGN PARAMETERS

1. CONCRETE STRENGTH: 3,000 P.S.I.
2. STEEL REINFORCEMENT: 60,000.

N.T.S.

## TYPICAL CONCRETE PIPE SUPPORT DETAIL | 5

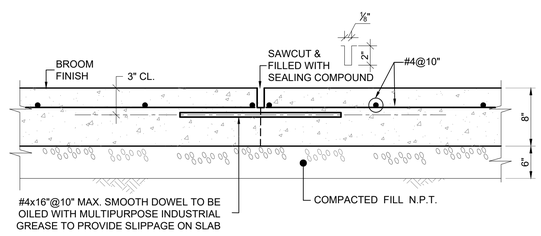


NOTE:

1. 1 - CONSTRUCTION JOINT LOCATED AT THE END OF EACH POURING.
2. CONCRETE STRENGTH: 4,000 P.S.I.

N.T.S.

## CONCRETE PAVEMENT DETAIL | 6

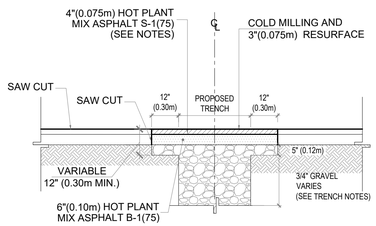


N.T.S.

## TYPICAL ASPHALT SECTION FOR RE-SURFACING | 7

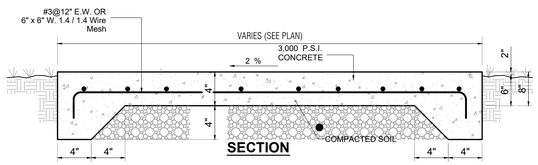


N.T.S.

## SIDEWALK DETAIL | 8

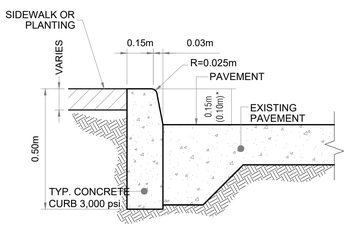


N.T.S.

## CURB DETAIL | 9

INTEGRA DESIGN GROUP PSC
(787) 767.2111 www. integrapr.com

THIS DOCUMENT, ITS CONTENT AND CONCEPT ARE THE SOLE PROPERTY OF INTEGRA. USE, REPRODUCTION, OR MODIFICATION OF ANY PART OR ENTIRELY ARE EXPRESSLY PROHIBITED, EXCEPT AS AGREED IN WRITING.
© INTEGRA DESIGN GROUP PSC

YO, _____, NÚMERO DE LICENCIA _____, CERTIFICO QUE SOY EL PROFESIONAL QUE DISEÑO ESTOS PLANOS Y LAS ESPECIFICACIONES COMPLEMENTARIAS; TAMBIEN CERTIFICO QUE ENTIENDO QUE DICHOS PLANOS Y ESPECIFICACIONES CUMPLEN CON LAS DISPOSICIONES APLICABLES DEL REGLAMENTO CONJUNTO Y LAS DISPOSICIONES APLICABLES DE LOS REGLAMENTOS Y CODIGOS DE LAS AGENCIAS, JUNTAS REGLAMENTADORAS O CORPORACIONES PUBLICAS CON JURISDICCION. RECONOZCO QUE CUALQUIER DECLARACION FALSA O FALSIFICACION DE LOS HECHOS QUE SE HAYA PRODUCIDO SIN CONOCIMIENTO O POR NEGLIGENCIA YA SEA POR MI, MIS AGENTES O EMPLEADOS, O POR OTRAS PERSONAS CON MI CONOCIMIENTO, ME HACEN RESPONSABLE DE CUALQUIER ACCION JUDICIAL Y DISCIPLINARIA POR LA OGPe Y OTRAS AUTORIDADES COMPETENTES, INCLUYENDO, PERO SIN LIMITARSE, A LA TERMINACION DE LA PARTICIPACION EN LOS PROCEDIMIENTOS DE CERTIFICACION PROFESIONAL EN LA OGPe.

Seal:

Revisions:

| Number | Date | Description |
|---|---|---|
| | | |

Project Title:
PIER 14
INFRASTRUCTURE
IMPROVEMENTS

FERNANDEZ JUNCOS AVENUE, KM. 2.1
SAN JUAN, PUERTO RICO

Client: AUTORIDAD DE PUERTOS DE P.R.

Project No.: 2200.0

Drawing Title:
**SITE DETAILS**

SET ISSUE DATE
▶ SEPT.-17-2026 ◀
BID PHASE

**NOT FOR CONSTRUCTION**

Sheet:
**C102**

File: P:\pr\65-San Juan\2200.0 Pier 14 Infrastructure Improvements\01-Working Files\01-Site\C102 SITE DETAILS; Plotted: 9/17/2026 12:41 PM by RMELENDEZ; Saved: 9/17/2026 12:39 PM by RMELENDEZ