Technical Specifications

South Region

Bid Package S3-1 A

PW 7779: DI 219290, DI 219300

CPM PR, LLC

October 1, 2025

PUERTO RICO
INDUSTRIAL DEVELOPMENT COMPANY
PRIDCO

PRIDCO STANDARD TECHNICAL SPECIFICATIONS

FOR THE FOLLOWING PROJECT:

REPARACIÓN Y MEJORAS DE EDIFICIOS INDUSTRIALES DE LA COMPAÑIA DE FOMENTO INDUSTRIAL PARA LOS:

DI: 219290 / BUILDING: M006205101 / PW:7779 / BO. CANAS, PONCE, PUERTO RICO

DI: 219300 / BUILDING: S072906500/ PW:7779 / BO. CANAS, PONCE, PUERTO RICO

PRIDCO FEMA PA-4339-DR-PR
SOUTH REGION, PUERTO RICO
BID NUMBER: S3-1A

Prepared by

ECRE
ECR ENGINEERING

September 24, 2025

PRIDCO STANDARD SPECIFICATIONS

PRIDCO FEMA PA-4339-DR-PR
SOUTH REGION, PUERTO RICO
BID NUMBER: S3-1A

ISSUED FOR BID

TECHNICAL SPECIFICATIONS INDEX

Section No.	Description	Total No. of Pages
01000	GENERAL SPECIFICATIONS	
01330	SUBMITTAL PROCEDURES	
015813	TEMPORARY PROJECT SIGNAGE	
02530	SANITARY SEWER SYSTEM	
02830	CHAIN LINK FENCES	
07520	ROOFING SPECIFICATIONS	
07520	SBS- MODIFIED BITUMEN COLD MEMBRANE	
08100	METAL DOORS AND FRAMES	
08331	ROLLING DOORS	
08520	ALUMINM JALOUSIE WINDOWS	
08710	DOOR HARDWARE	
08710	FINISHING HARDWRE	
08810	GLASS AND GLAZING	
09941	PAINTING	
10280	TOILET BATH AND LAUNDRY ACCESSORIES	
15000	PLUMBING	
160000	ELECTRICAL	
160000	ELECTRICAL-2	
233400	EXHAUST FANS	
321216	HOT PLANT MIX BITUMINOUS PAVEMENT	
N/A	ESPECIFICACIONES AREA RESTROOMS, STORAGE Y JANITOR ROOM	
N/A	ESPECIFICACIONES DE AREA MANUFACTURA	
N/A	ESPECIFICACIONES DE REMPLAZO	

END OF TABLE OF CONTENTS

SECTION 01000
GENERAL SPECIFICATIONS

1. DEFINITIONS

Wherever the words defined in this section or pronouns used in their stead occur in the Contract Documents, they shall have the meanings herein given.

As Directed, as Required, Etc.

Wherever in the Contract Documents, or on the Drawings, the words "as directed," "as ordered," "as requested," "as required," "as permitted," or words of like import are used, it shall be understood that the direction, order, request, requirement, or permission of the Engineer is intended. Similarly, the words "approved," "acceptable," "suitable," "satisfactory," and words of like import shall mean approved by, acceptable to, suitable to, or satisfactory to the Engineer.

Elevation

The figures given on the Drawings or in the other Contract Documents after the word "elevation" or abbreviation of it shall mean the distance in feet above the datum adopted by the Engineer.

Rock

The word "rock", wherever used as the name of an excavated material or material to be excavated, shall mean only boulders and pieces of concrete or masonry exceeding 1 cu. yd. in volume, or solid ledge rock which, in the opinion of the Engineer, requires, for its removal, drilling and blasting, wedging, sledging, barring, or breaking up with a power-operated tool. No soft or disintegrated rock which can be removed with a hand pick or power-operated excavator or shovel, no loose, shaken, or previously blasted rock or broken stone in rock fillings or elsewhere, and no rock exterior to the maximum limits of measurement allowed, which may fall into the excavation, will be measured or allowed as "rock."

Earth

The word "earth", wherever used as the name of an excavated material or material to be excavated, shall mean all kinds of material other than rock as above defined.

2. ABBREVIATIONS

Where any of the following abbreviations are used in the Contract Documents, they shall have the meaning set forth opposite each.

AASHTO	American Association of State Highway and Transportation Officials
ACI	American Concrete Institute
AISC	American Institute of Steel Construction
ANS	American National Standard
ANSI	American National Standards Institute
ASCE	American Society of Civil Engineers

ASTM	American Society for Testing and Materials
AWWA	American Water Works Association
Fed. Spec.	Federal Specifications issued by the Federal Supply Service of the General Services Administration, Washington, D. C.
125-lb. ANS 250-1b. ANS	American National Standard for Cast-iron Pipe Flanges and Flanged Fittings, Designation B16.1-1975, for the appropriate class
AWG	American or Brown and Sharpe Wire Gage
NPT	National Pipe Thread
OS&Y	Outside screw and yoke
Stl. WG	U. S. Steel Wire, Washburn and Moen, American Steel and Wire or Roebling Gage
USS Gage	United States Standard Gage
WOG	Water, Oil, Gas
WSP	Working steam pressure

3. HANDLING AND DISTRIBUTION

The Contractor shall handle, haul, and distribute all materials and all surplus materials on the different portions of the Work, as necessary or required; shall provide suitable and adequate storage room for materials and equipment during the progress of the Work, and be responsible for the protection, loss of, or damage to materials and equipment furnished by him, until the final completion and acceptance of the Work.

Storage and demurrage charges by transportation companies and vendors shall be borne by the Contractor.

4. MATERIALS - SAMPLES - INSPECTION

Unless otherwise expressly provided on the Drawings or in any of the other Contract Documents, only new materials and equipment shall be incorporated in the Work. All materials and equipment furnished by the Contractor to be incorporated in the Work shall be subject to the inspection of the Engineer. No material shall be processed or fabricated for the Work or delivered to the Work site without prior concurrence of the Engineer.

As soon as possible after execution of the AGREEMENT, the Contractor shall submit to the Engineer the names and addresses of the manufacturers and suppliers of all materials and equipment he proposes to incorporate into the Work. When shop and working drawings are required as specified below, the Contractor shall submit prior to the submission of such drawings, data in sufficient detail to enable the Engineer to determine whether the manufacturer and/or the supplier have the ability to furnish a product meeting the Specifications. As requested, the

Contractor shall also submit data relating to the materials and equipment he proposes to incorporate into the Work in sufficient detail to enable the Engineer to identify and evaluate the particular product and to determine whether it conforms to the Contract requirements. Such data shall be submitted in a manner similar to that specified for submission of shop and working drawings.

Facilities and labor for storage, handling, and inspection of all materials and equipment, shall be furnished by the Contractor. Defective materials and equipment shall be removed immediately from the site of the Work.

If the Engineer so requires, either prior to or after commencement of the Work, the Contractor shall submit samples of materials for such special tests as the Engineer deems necessary to demonstrate that they conform to the Specifications. Such samples, including concrete test cylinders, shall be furnished, taken, stored, packed, and shipped by the Contractor as directed. The Contractor shall furnish suitable molds for making concrete test cylinders. Except as otherwise expressly specified, the Owner shall make arrangements for, and pay for, the tests.

All samples shall be packed so as to reach their destination in good condition, and shall be labeled to indicate the material represented, the name of the building or work and location for which the material is intended, and the name of the Contractor submitting the sample. To ensure consideration of samples, the Contractor shall notify the Engineer by letter that the samples have been shipped and shall properly describe the samples in the letter. The letter of notification shall be sent separate from and should not be enclosed with the samples.

The Contractor shall submit data and samples, or place his orders, sufficiently early to permit consideration, inspection and testing before the materials and equipment are needed for incorporation in the Work. The consequences of his failure to do so shall be the Contractor's sole responsibility.

In order to demonstrate the proficiency of workmen, or to facilitate the choice among several textures, types, finishes, surfaces, etc., the Contractor shall provide such samples of workmanship of wall, floor, finish, etc., as may be required.

When required, the Contractor shall furnish to the Engineer triplicate sworn copies of manufacturer's shop or mill tests (or reports from independent testing laboratories) relative to materials, equipment performance ratings, and concrete data.

After review of the samples, data, etc., the materials and equipment used on the Work shall in all respects conform therewith.

5. INSPECTION OF WORK AWAY FROM THE SITE

If work to be done away from the construction site is to be inspected on behalf of the Owner during its fabrication, manufacture, or testing, or before shipment, the Contractor shall give notice to the Engineer of the place and time where such fabrication, manufacture, testing, or shipping is to be done. Such notice shall be in writing and delivered to the Engineer in ample time so that the necessary arrangements for the inspection can be made.

6. CONTRACTOR'S SHOP AND WORKING DRAWINGS

The Contractor shall submit (in reproducible transparency form unless otherwise specified) shop and working drawings of concrete reinforcement, structural details, piping layout, wiring, materials fabricated especially for the Contract, and materials and equipment for which such drawings are specifically requested.

Such drawings shall show the principal dimensions, weight, structural and operating features, space required, clearances, type and/or brand of finish or shop coat, grease fittings, etc., depending on the subject of the drawing. When it is customary to do so, when the dimensions are of particular importance, or when so specified, the drawings shall be certified by the manufacturer or fabricator as correct for the Contract.

When so specified or if considered by the Engineer to be acceptable manufacturer's specifications, catalog data, descriptive matter, illustrations, etc., may be submitted in place of shop and working drawings. In such case the requirements shall be as specified for shop and working drawings, insofar as applicable, except that the submission shall be in quadruplicate.

The Contractor shall be responsible for the prompt and timely submittal of all shop and working drawings so that there shall be no delay to the Work due to the absence of such drawings. Prior to the submittal of any shop drawings, the Contractor shall submit a schedule of proposed shop drawing transmittals. The schedule shall identify the subject matter of each transmittal the corresponding specification section number and the proposed date of submission. During the progress of the Work the schedule shall be revised and resubmitted as necessary.

No material or equipment shall be purchased or fabricated especially for the Contract until the required shop and working drawings have been submitted as herein above provided and reviewed for conformance to the Contract requirements. All such materials and equipment and the work involved in their installation or incorporation into the Work shall then be as shown in and represented by said drawings.

Until the necessary review has been made, the Contractor shall not proceed with any portion of the Work (such as the construction of foundations), the design or details of which are dependent upon the design or details of work, materials, equipment or other features for which review is required.

All shop and working drawings shall be submitted to the Engineer by and/or through the Contractor, who shall be responsible for obtaining shop and working drawings from his subcontractors and returning reviewed drawings to them. All shop and working drawings shall be prepared on standard size, 24-in. by 36-in. sheets, except for those made by changing the existing standard shop or working drawings. All drawings shall be clearly marked with the names of the Owner, Contractor, and building, equipment, or structure to which the drawing applies, and shall be suitably numbered. Each shipment of drawings shall be accompanied by a letter of transmittal giving a list of the drawing numbers and the names mentioned above.

Only drawings which have been checked and corrected by the fabricator, should be submitted to the Contractor by his subcontractors and vendors. Prior to submitting drawings to the Engineer, the Contractor shall check thoroughly all such drawings to satisfy him-self, that the subject matter thereof conforms to the Drawings and Specifications in all respects. All drawings, which are correct, shall be marked with the date, checker's name, and indication of the Contractor's approval, and then shall be submitted to the Engineer; other drawings shall be returned for correction.

If a shop drawing shows any deviation from the Contract requirements, the Contractor shall make specific mention of the deviations in his letter of transmittal.

The review of shop and working drawings hereunder will be general only, and nothing contained in this GENERAL SPECIFICATION shall relieve, diminish or alter in any respect the responsibilities of the Contractor under the Contract Documents and in particular, the specific responsibility of the Contractor for details of design and dimensions necessary for proper fitting and construction of the work as required by the Contract and for achieving the result and performance specified thereunder.

Should the Contractor submit equipment that requires modifications to the structures, piping,

electrical conduit, wires and appurtenances, layout, etc., detailed on the Drawings, he shall also submit details of the proposed modifications. If such equipment and modifications are accepted, the Contractor, at no additional cost to the Owner, shall do all work necessary to make such modifications.

The marked-up reproducible of the shop and working drawings or one marked-up copy of catalog cuts will be returned to the Contractor. The Contractor shall furnish additional copies of such drawings or catalog cuts when so requested.

7. OCCUPYING PRIVATE LAND

The Contractor shall not (except after written consent from the proper parties) enter or occupy with men, tools, materials, or equipment, any land outside the rights-of-way or property of the Owner. A copy of the written consent shall be given to the Engineer.

8. INTERFERENCE WITH AND PROTECTION OF STREETS

The Contractor shall not close or obstruct any portion of a street, road, or private way without obtaining permits therefor from the proper authorities. If any street, road or private way shall be rendered unsafe by the Contractor's operations, he shall make such repairs or provide such temporary ways or guards as shall be acceptable to the proper authorities.

Streets, roads, private ways, and sidewalks, not closed, shall be maintained passable and safe by the Contractor, who shall assume and have full responsibility for the adequacy and safety of provisions made therefor.

The Contractor shall, at least 24 hours in advance, notify the Police and Fire Departments in writing, with a copy to the Engineer, if the closure of a street or road is necessary. He shall cooperate with the Police Department in the establishment of alternate routes and shall provide adequate detour signs, plainly marked and well lighted, in order to minimize confusion.

9. STORAGE OF MATERIALS AND EQUIPMENT

All excavated materials and equipment to be incorporated in the Work shall be placed so as not to injure any part of the Work or existing facilities and so that free access can be had at all times to all parts of the Work and to all public utility installations in the vicinity of the Work. Materials and equipment shall be kept neatly piled and compactly stored in such locations as will cause a minimum of inconvenience to public travel and adjoining owners, tenants and occupants.

10. SAFETY

The Contractor shall take all necessary precautions and provide all necessary safeguards to prevent personal injury and property damage. The Contractor shall provide protection for all persons including but not limited to his employees and employees of other contractors or subcontractors; members of the public; and employees, agents, and representatives of the Owner, the Engineer, and regulatory agencies that may be on or about the Work. The Contractor shall provide protection for all public and private property including but not limited to structures, pipes, and utilities, above and below ground.

The Contractor shall provide and maintain all necessary safety equipment such as fences, barriers, signs, lights, walkways, guards and fire prevention and fire-fighting equipment and shall take such other action as is required to fulfill his obligations under this subsection.

The Contractor shall comply with all applicable Federal, State and local laws, ordinances, rules and regulations and lawful orders of all authorities having jurisdiction for the safety of persons and

protection of property.

The Contractor shall designate a responsible member of his organization at the site whose duty shall be the prevention of accidents. This responsible person shall have the authority to take immediate action to correct unsafe or hazardous conditions and to enforce safety precautions and programs.

11. SANITARY REGULATIONS

The Contractor shall provide adequate sanitary facilities for the use of those employed on the Work. Such facilities shall be made available when the first employees arrive on the site of the Work, shall be properly secluded from public observation, and shall be constructed and maintained during the progress of the Work in suitable numbers and at such points and in such manner as may be required.

The Contractor shall maintain the sanitary facilities in a satisfactory and sanitary condition at all times and shall enforce their use. He shall rigorously prohibit the committing of nuisances on the site of the Work, on the lands of the Owner, or on adjacent property.

12. LINES, GRADES AND MEASUREMENTS

The Contractor shall employ a competent civil engineer, registered within Puerto Rico as a Professional Engineer or Land Surveyor. The Contractor shall require said engineer to establish all lines, elevations, reference marks, batter boards, etc., needed by the Contractor during the progress of the Work, and from time to time to verify such marks by instrument or other appropriate means.

The Engineer shall be permitted at all times to check the lines, elevations, reference marks, batter boards, etc., set by the Contractor, who shall correct any errors in lines, elevations, reference marks, batter boards, etc., disclosed by such check. Such a check shall not be construed to be an approval of the Contractor's work and shall not relieve or diminish in any way the responsibility of the Contractor for the accurate and satisfactory construction and completion of the entire Work.

The Contractor shall make, check, and be responsible for all measurements and dimensions necessary for the proper construction of and the prevention of misfittings in the Work.

13. DIMENSIONS OF EXISTING STRUCTURES

Where the dimensions and locations of existing structures are of importance in the installation or connection of any part of the Work, the Contractor shall verify such dimensions and locations in the field before the fabrication of any material or equipment which is dependent on the correctness of such information.

14. WORK TO CONFORM

During its progress and on its completion, the Work shall conform truly to the lines, levels, and grades indicated on the Drawings or given by the Engineer and shall be built in a thoroughly substantial and workmanlike manner, in strict accordance with the Drawings, Specifications, and other Contract Documents and the directions given from time to time by the Engineer.

All work done without instructions having been given therefor by the Engineer, without proper lines or levels, or performed during the absence of the Engineer, will not be estimated or paid for except when such work is authorized by the Engineer in writing. Work so done may be ordered uncovered or taken down, removed, and replaced at the Contractor's expense.

15. PIPE LOCATION

Exterior pipelines will be located substantially as indicated on the Drawings, but the right is reserved to the Owner, acting through the Engineer, to make such modifications in location as may be found desirable to avoid interference with existing structures or for other reasons. Where fittings, etc., are noted on the Drawings, such notation is for the Contractor's convenience and does not relieve him from laying and jointing different or additional items where required.

Small interior piping is indicated diagrammatically on the Drawings, and the exact location is to be determined in the field. Piping shall be arranged in a neat, compact, and workmanlike manner, with a minimum of crossing and interlacing, so as not to interfere with equipment or access ways, and, in general, without diagonal runs.

16. PLANNING AND PROGRESS SCHEDULES

Before starting the Work and from time to time during its progress, as the Engineer may request, the Contractor shall submit to the Engineer a written description of the methods he plans to use in doing the Work and the various steps he intends to take.

Within 15 days after the date of formal execution of the AGREEMENT, the Contractor shall prepare and submit to the Engineer (a) a written schedule fixing the dates on which additional drawings, if any, will be needed by the Contractor and (b) a written schedule fixing the respective dates for the start and completion of various parts of the Work. Each such schedule shall be subject to review from time to time during the progress of the Work.

17. PRECAUTIONS DURING ADVERSE WEATHER

During adverse weather and against the possibility thereof, the Contractor shall take all necessary precautions so that the Work may be properly done and satisfactory in all respects. When required, protection shall be provided by use of tarpaulins, wood and building-paper shelters, or other suitable means.

During cold weather, materials shall be preheated, if required, and the materials and adjacent structure into which they are to be incorporated shall be made and kept sufficiently warm so that a proper bond will take place and a proper curing, aging, or drying will result. Protected spaces shall be artificially heated by suitable means, which will result in a moist or a dry atmosphere according to the particular requirements of the work being protected. Ingredients for concrete and mortar shall be sufficiently heated so that the mixture will be warm throughout when used.

18. ELECTRICAL ENERGY

The Contractor shall make all necessary applications and arrangements and pay all fees and charges for electrical energy for power and light necessary for the proper completion of the Work and during its entire progress. The Contractor shall provide and pay for all temporary wiring, switches, connections, and meters.

The Contractor shall provide sufficient electric lighting so that all work may be done in a workmanlike manner when there is not sufficient daylight.

19. CUTTING AND PATCHING

The Contractor shall leave all chases or openings for the installation of his own or any other contractor's or subcontractor's work, or shall cut the same in existing work, and shall see that all sleeves or forms are at the work and properly set in ample time to prevent delays. He shall see that all such chases, openings, and sleeves are located accurately and are of proper size and shape

and shall consult with the Engineer and the contractors and subcontractors concerned in reference to this work.

The Contractor shall not cut or alter the work of any subcontractor or any other contractor, nor permit any of his subcontractors to cut or alter the work of any other contractor or subcontractor, except with the written consent of the contractor or subcontractor whose work is to be cut or altered with the written consent of the Engineer. All cutting and patching or repairing made necessary by the negligence, carelessness, or incompetence of the Contractor or any of his subcontractors shall be done by or at the expense of the Contractor and shall be the responsibility of the Contractor.

* * *

SECTION 01330 - SUBMITTAL PROCEDURES

PART 1 - GENERAL

1.1 SUMMARY

A. This Section includes administrative and procedural requirements for submitting Shop Drawings, Product Data, Samples, and other submittals.

B. See Division 1 Section "Construction Progress Documentation" for submitting schedules and reports, including Contractor's Construction Schedule.

C. See Division 1 Section "Photographic Documentation" for submitting construction photographs.

D. See Division 1 Section "Quality Requirements" for submitting test and inspection reports

E. See Division 1 Section "Closeout Procedures" for submitting warranties.

F. See Division 1 Section "Project Record Documents" for submitting Record Drawings, Record Specifications, and Record Product Data.

1.2 DEFINITIONS

A. Action Submittals: Written and graphic information that requires Engineer's responsive action.

B. Informational Submittals: Written information that does not require Engineer's responsive action. Submittals may be rejected for not complying with requirements.

1.3 SUBMITTAL PROCEDURES

A. Coordination: Coordinate preparation and processing of submittals with performance of construction activities.

1. Coordinate each submittal with fabrication, purchasing, testing, delivery, other submittals, and related activities that require sequential activity.
2. Coordinate transmittal of different types of submittals for related parts of the Work so processing will not be delayed because of need to review submittals concurrently for coordination.

a. Engineer reserves the right to withhold action on a submittal requiring coordination with other submittals until related submittals are received.

B. Submittals Schedule: Comply with requirements in Division 1 Section "Construction Progress Documentation" for list of submittals and time requirements for scheduled performance of related construction activities.

C. Processing Time: Allow enough time for submittal review, including time for resubmittals, as follows. Time for review shall commence on Engineer's receipt of submittal. No extension of the Contract Time will be authorized because of failure to transmit submittals enough in advance of the Work to permit processing, including resubmittals.

1. Initial Review: Allow 15 days for initial review of each submittal. Allow additional time if coordination with subsequent submittals is required. Engineer will advise Contractor when a submittal being processed must be delayed for coordination.
2. Intermediate Review: If intermediate submittal is necessary, process it in same manner as initial submittal.
3. Resubmittal Review: Allow 15 days for review of each resubmittal.

D. Identification: Place a permanent label or title block on each submittal for identification.

1. Indicate name of firm or entity that prepared each submittal on label or title block.
2. Provide a space approximately 6 by 8 inches (150 by 200mm) on label or beside title block to record Contractor's review and approval markings and action taken by Engineer.
3. Include the following information on label for processing and recording action taken:

a. Project name.
b. Date.
c. Name and address of Engineer.
d. Name and address of Contractor.
e. Name and address of subcontractor.
f. Name and address of supplier.
g. Name of manufacturer.
h. Submittal number or other unique identifier, including revision identifier.

1) Submittal number shall use Specification Section number followed by a decimal point and then a sequential number (e.g., 06100.01). Resubmittals shall include an alphabetic suffix after another decimal point (e.g., 06100.01.A).

i. Number and title of appropriate Specification Section.
j. Drawing number and detail references, as appropriate.
k. Location(s) where product is to be installed, as appropriate.
l. Other necessary identification.

E. Deviations: Highlight, encircle, or otherwise specifically identify deviations from the Contract Documents on submittals.

F. Additional Copies: Unless additional copies are required for final submittal, and unless Engineer observes noncompliance with provisions in the Contract Documents, initial submittal may serve as final submittal.

1. Additional copies submitted for maintenance manuals will not be marked with action taken and will be returned.

G. Transmittal: Package each submittal individually and appropriately for transmittal and handling. Transmit each submittal using a transmittal form. Engineer will return submittals, without review, received from sources other than Contractor.

H. Resubmittals: Make resubmittals in same form and number of copies as initial submittal.

1. Note date and content of previous submittal.
2. Note date and content of revision in label or title block and clearly indicate extent of revision.
3. Resubmit submittals until they are marked "Approved"and "Approved as connected"

I. Distribution: Furnish copies of final submittals to manufacturers, subcontractors, suppliers, fabricators, installers, authorities having jurisdiction, and others as necessary for performance of construction activities. Show distribution on transmittal forms.

J. Use for Construction: Use only final submittals with mark indicating "Approved" or "Approved as connected" taken by Engineer.

1.4 CONTRACTOR'S USE OF ENGINEER'S CAD FILES

A. General: At Contractor's written request, copies of Engineer's CAD files will be provided to Contractor for Contractor's use in connection with Project, if considered appropiate by Engineer.

PART 2 - PRODUCTS

2.1 ACTION SUBMITTALS

A. General: Prepare and submit Action Submittals required by individual Specification Sections.

B. Product Data: Collect information into a single submittal for each element of construction and type of product or equipment.

1. If information must be specially prepared for submittal because standard printed data are not suitable for use, submit as Shop Drawings, not as Product Data.
2. Mark each copy of each submittal to show which products and options are applicable.
3. Include the following information, as applicable:

    a. Manufacturer's written recommendations.
    b. Manufacturer's product specifications.
    c. Manufacturer's installation instructions.
    d. Manufacturer's catalog cuts.
    e. Wiring diagrams showing factory-installed wiring.
    f. Printed performance curves.
    g. Operational range diagrams.
    h. Compliance with specified referenced standards.
    i. Testing by recognized testing agency.

4. Number of Copies: Submit five copies of Product Data, unless otherwise indicated. Engineer will return three copies. Mark up and retain one returned copy as a Project Record Document.

C. Shop Drawings: Prepare Project-specific information, drawn accurately to scale. Do not base Shop Drawings on reproductions of the Contract Documents or standard printed data.

1. Preparation: Fully illustrate requirements in the Contract Documents. Include the following information, as applicable:

   a. Dimensions.
   b. Identification of products.
   c. Fabrication and installation drawings.
   d. Roughing-in and setting diagrams.
   e. Wiring diagrams showing field-installed wiring, including power, signal, and control wiring.
   f. Shopwork manufacturing instructions.
   g. Templates and patterns.
   h. Schedules.
   i. Notation of coordination requirements.
   j. Notation of dimensions established by field measurement.
   k. Relationship to adjoining construction clearly indicated.
   l. Seal and signature of professional engineer if specified.
   m. Wiring Diagrams: Differentiate between manufacturer-installed and field-installed wiring.

2. Sheet Size: Except for templates, patterns, and similar full-size drawings, submit Shop Drawings on sheets at least 8-1/2 by 11 inches (215 by 280 mm) but no larger than 30 by 40 inches (750 by 1000 mm).
3. Number of Copies: Submit two opaque (bond) copies of each submittal. Engineer will return one copy.

D. Samples: Submit Samples for review of kind, color, pattern, and texture for a check of these characteristics with other elements and for a comparison of these characteristics between submittal and actual component as delivered and installed.

1. Transmit Samples that contain multiple, related components such as accessories together in one submittal package.
2. Identification: Attach label on unexposed side of Samples that includes the following:

   a. Generic description of Sample.
   b. Product name and name of manufacturer.
   c. Sample source.
   d. Number and title of appropriate Specification Section.

3. Disposition: Maintain sets of approved Samples at Project site, available for quality-control comparisons throughout the course of construction activity. Sample sets may be used to determine final acceptance of construction associated with each set.
4. Samples for Initial Selection: Submit manufacturer's color charts consisting of units or sections of units showing the full range of colors, textures, and patterns available.

   a. Number of Samples: Submit two full set(s) of available choices where color, pattern, texture, or similar characteristics are required to be selected from manufacturer's product line. Engineer will one return submittal with options selected.

5. Samples for Verification: Submit full-size units or Samples of size indicated, prepared from same material to be used for the Work, cured and finished in manner specified, and physically identical with material or product proposed for use, and that show full range of color and texture variations expected. Samples include, but are not limited to, the following: partial sections of manufactured or fabricated components; small cuts or containers of materials; complete units of repetitively used materials; swatches showing color, texture, and pattern; color range sets; and components used for independent testing and inspection.

   a. Number of Samples: Submit three sets of Samples. Engineer will retain two Sample sets; remainder will be returned. Mark up and retain one returned Sample set as a Project Record Sample.

E. Product Schedule or List: As required in individual Specification Sections, prepare a written summary indicating types of products required for the Work and their intended location.

   1. Number of Copies: Submit three copies of product schedule or list, unless otherwise indicated. Engineer will return two copies.

F. Submittals Schedule: Comply with requirements specified in Division 1 Section "Construction Progress Documentation."

G. Application for Payment: Comply with requirements specified in Division 1 Section "Payment Procedures."

H. Schedule of Values: Comply with requirements specified in Division 1 Section "Payment Procedures."

I. Subcontract List: Prepare a written summary identifying individuals or firms proposed for each portion of the Work, including those who are to furnish products or equipment fabricated to a special design.

   1. Number of Copies: Submit three copies of subcontractor list, unless otherwise indicated. Engineer will return two copies.

2.2 INFORMATIONAL SUBMITTALS

A. General: Prepare and submit Informational Submittals required by other Specification Sections.

   1. Number of Copies: Submit two copies of each submittal, unless otherwise indicated. Engineer will return three copies.
   2. Certificates and Certifications: Provide a notarized statement that includes signature of entity responsible for preparing certification. Certificates and certifications shall be signed by an officer or other individual authorized to sign documents on behalf of that entity.
   3. Test and Inspection Reports: Comply with requirements specified in Division 1 Section "Quality Requirements."

B. Coordination Drawings: Comply with requirements specified in Division 1 Section "Project Management and Coordination."

C. Contractor's Construction Schedule: Comply with requirements specified in Division 1 Section "Construction Progress Documentation."

D. Qualification Data: Prepare written information that demonstrates capabilities and experience of firm or person. Include lists of completed projects with project names and addresses, names and addresses of Engineers and owners, and other information specified.

E. Welding Certificates: Prepare written certification that welding procedures and personnel comply with requirements in the Contract Documents. Submit record of Welding Procedure Specification (WPS) and Procedure Qualification Record (PQR) on AWS forms. Include names of firms and personnel certified.

F. Installer Certificates: Prepare written statements on manufacturer's letterhead certifying that Installer complies with requirements in the Contract Documents and, where required, is authorized by manufacturer for this specific Project.

G. Manufacturer Certificates: Prepare written statements on manufacturer's letterhead certifying that manufacturer complies with requirements in the Contract Documents. Include evidence of manufacturing experience where required.

H. Product Certificates: Prepare written statements on manufacturer's letterhead certifying that product complies with requirements in the Contract Documents.

I. Material Certificates: Prepare written statements on manufacturer's letterhead certifying that material complies with requirements in the Contract Documents.

J. Material Test Reports: Prepare reports written by a qualified testing agency, on testing agency's standard form, indicating and interpreting test results of material for compliance with requirements in the Contract Documents.

K. Product Test Reports: Prepare written reports indicating current product produced by manufacturer complies with requirements in the Contract Documents. Base reports on evaluation of tests performed by manufacturer and witnessed by a qualified testing agency, or on comprehensive tests performed by a qualified testing agency.

L. Research/Evaluation Reports: Prepare written evidence, from a model code organization acceptable to authorities having jurisdiction, that product complies with building code in effect for Project.

M. Preconstruction Test Reports: Prepare reports written by a qualified testing agency, on testing agency's standard form, indicating and interpreting results of tests performed before installation of product, for compliance with performance requirements in the Contract Documents.

N. Compatibility Test Reports: Prepare reports written by a qualified testing agency, on testing agency's standard form, indicating and interpreting results of compatibility tests performed before installation of product. Include written recommendations for primers and substrate preparation needed for adhesion.

O. Field Test Reports: Prepare reports written by a qualified testing agency, on testing agency's standard form, indicating and interpreting results of field tests performed either during

installation of product or after product is installed in its final location, for compliance with requirements in the Contract Documents.

P. Maintenance Data: Prepare written and graphic instructions and procedures for operation and normal maintenance of products and equipment. Comply with requirements specified in Division 1 Section "Operation and Maintenance Data."

Q. Design Data: Prepare written and graphic information, including, but not limited to, performance and design criteria, list of applicable codes and regulations, and calculations. Include list of assumptions and other performance and design criteria and a summary of loads. Include load diagrams if applicable. Provide name and version of software, if any, used for calculations. Include page numbers.

R. Manufacturer's Instructions: Prepare written or published information that documents manufacturer's recommendations, guidelines, and procedures for installing or operating a product or equipment. Include name of product and name, address, and telephone number of manufacturer.

S. Manufacturer's Field Reports: Prepare written information documenting factory-authorized service representative's tests and inspections. Include the following, as applicable:

1. Statement on condition of substrates and their acceptability for installation of product.
2. Summary of installation procedures being followed, whether they comply with requirements and, if not, what corrective action was taken.
3. Results of operational and other tests and a statement of whether observed performance complies with requirements.

T. Insurance Certificates and Bonds: Prepare written information indicating current status of insurance or bonding coverage. Include name of entity covered by insurance or bond, limits of coverage, amounts of deductibles, if any, and term of the coverage.

U. Construction Photographs: Comply with requirements specified in Division 1 Section "Photographic Documentation."

V. Material Safety Data Sheets (MSDSs): Submit information directly to Owner; do not submit to Engineer.

1. Engineer will not review submittals that include MSDSs and will return them for resubmittal.

2.3 DELEGATED DESIGN

A. Performance and Design Criteria: Where professional design services or certifications by a design professional are specifically required of Contractor by the Contract Documents, provide products and systems complying with specific performance and design criteria indicated.

1. If criteria indicated are not sufficient to perform services or certification required, submit a written request for additional information to Engineer.

B. Delegated-Design Submittal: In addition to Shop Drawings, Product Data, and other required submittals, submit three copies of a statement, signed and sealed by the responsible design professional, for each product and system specifically assigned to Contractor to be designed or certified by a design professional.

1. Indicate that products and systems comply with performance and design criteria in the Contract Documents. Include list of codes, loads, and other factors used in performing these services.

PART 3 - EXECUTION

3.1 CONTRACTOR'S REVIEW

A. Review each submittal and check for coordination with other Work of the Contract and for compliance with the Contract Documents. Note corrections and field dimensions. Mark with approval stamp before submitting to Engineer.

B. Approval Stamp: Stamp each submittal with a uniform, approval stamp. Include Project name and location, submittal number, Specification Section title and number, name of reviewer, date of Contractor's approval, and statement certifying that submittal has been reviewed, checked, and approved for compliance with the Contract Documents.

3.2 ENGINEER'S ACTION

A. General: Engineer will not review submittals that do not bear Contractor's approval stamp and will return them without action.

B. Action Submittals: Engineer will review each submittal, make marks to indicate corrections or modifications required, and return it. Engineer will stamp each submittal with an action stamp and will mark stamp appropriately to indicate action taken, as follows: "Approved", "Approved as Connected", "Revise and Resubmit", "Not approved".

C. Informational Submittals: Engineer will review each submittal and will not return it, or will return it if it does not comply with requirements. Engineer will forward each submittal to appropriate party.

D. Partial submittals are not acceptable, will be considered nonresponsive, and will be returned without review.

E. Submittals not required by the Contract Documents may not be reviewed and may be discarded.

END OF SECTION 01330

SECTION 01 58 13
TEMPORARY PROJECT SIGNAGE

PART 1 GENERAL

1.1 SECTION INCLUDES

A. Temporary Project Sign including framing, footing, signage panel, art and hardware.

1.2 WARRANTY

A. Sign structure and framing- for the complete project duration.

B. Art- printed art shall be guaranteed for a minimum of 3 years.

C. Warranty includes the repair or replacement of materials that does not comply with requirements or that fails within specified warranty period. Failures include, but are not limited to, cracking, deforming or otherwise deteriorating beyond normal weathering.

1.3 SUBMITTALS

A. See Section 01 – for Administrative Requirements for submittal procedures.

B. Shop Drawing:
   1. Signage content, layout, lettering and color.
   2. Shall include all the signage components such as framing, footing, panels, art and hardware.
   3. Description of all components such as material, dimensions, sizes and material certifications such as lumber grades.

PART 2 PRODUCTS

2.1 MATERIALS

A. General
   1. Contractor shall furnish and install an 8’ x 16’ Temporary Project Signage.
   2. Sign shall be maintained for the complete duration of the project and shall be made in a washable surface as described in this section.
   3. Location shall be in a visible location from street in coordination with Owner.

B. Framing
   1. Grade 1 solid dry lumber certified by the American Lumber Standards Committee Board of Review.
   2. Species- Douglas fir, spruce, oak, or cypress in accordance with the provisions of AASHTO M 168.
   3. The material must be pressure treated with pentachlorophenol or chromate copper arsenate in compliance with the regulations of the AWPA.
   4. Wood shall be free of visible knots or decomposing parts.
   5. Finish framing with one coat minimum of primer and two coats minimum of heavy-duty oil based white enamel specially designed for wood.

C. Footing

1. Concrete footing as per drawings. Refer to cast in place specifications for project concrete requirements.

D. Signage Panel substrate:
   1. Exterior grade ½" thickness plywood bound with high density resin bound, grade B-B or better according to PS-1 specification.
   2. Plywood shall be laminated with vinyl or aluminum on both sides.

E. Art:
   1. All-color UV-cured digital printing process, with minimal color resolution of 720 DPI.
   2. The impression will be guaranteed for a minimum of three (3) years in exterior settings.
   3. Art shall be as per digital file provided by owner.

F. Hardware
   1. Bolts, nuts, washers and all related hardware required for the installation and erection of the Temporary Sign shall be aluminum or galvanized steel.

PART 3 EXECUTION

3.1 INSTALLATION

A. Install project identification sign within number of days established in contract.

B. Erect at designated location.

C. Erect supports and framing on secure foundation, rigidly braced and framed as per drawings and approved shop drawings.

D. Install sign surface plumb and level. Anchor securely.

E. Signage location shall not block visibility of existing traffic signage.

F. Contractor shall maintain Temporary Signs in good conditions for the complete project duration by painting and repairing as required.

G. After project closure the contractor shall remove Temporary Sign including all framing or accessory materials used for the erection of the sign.

PART 4 DRAWINGS

4.1 USE OF DRAWINGS

A. The following drawings represents minimum requirements for the erection and installation of the sign.

B. Actual site conditions may vary from what is shown in drawings. Contractor is responsible of examining site conditions before erecting the Temporary Project Sign.

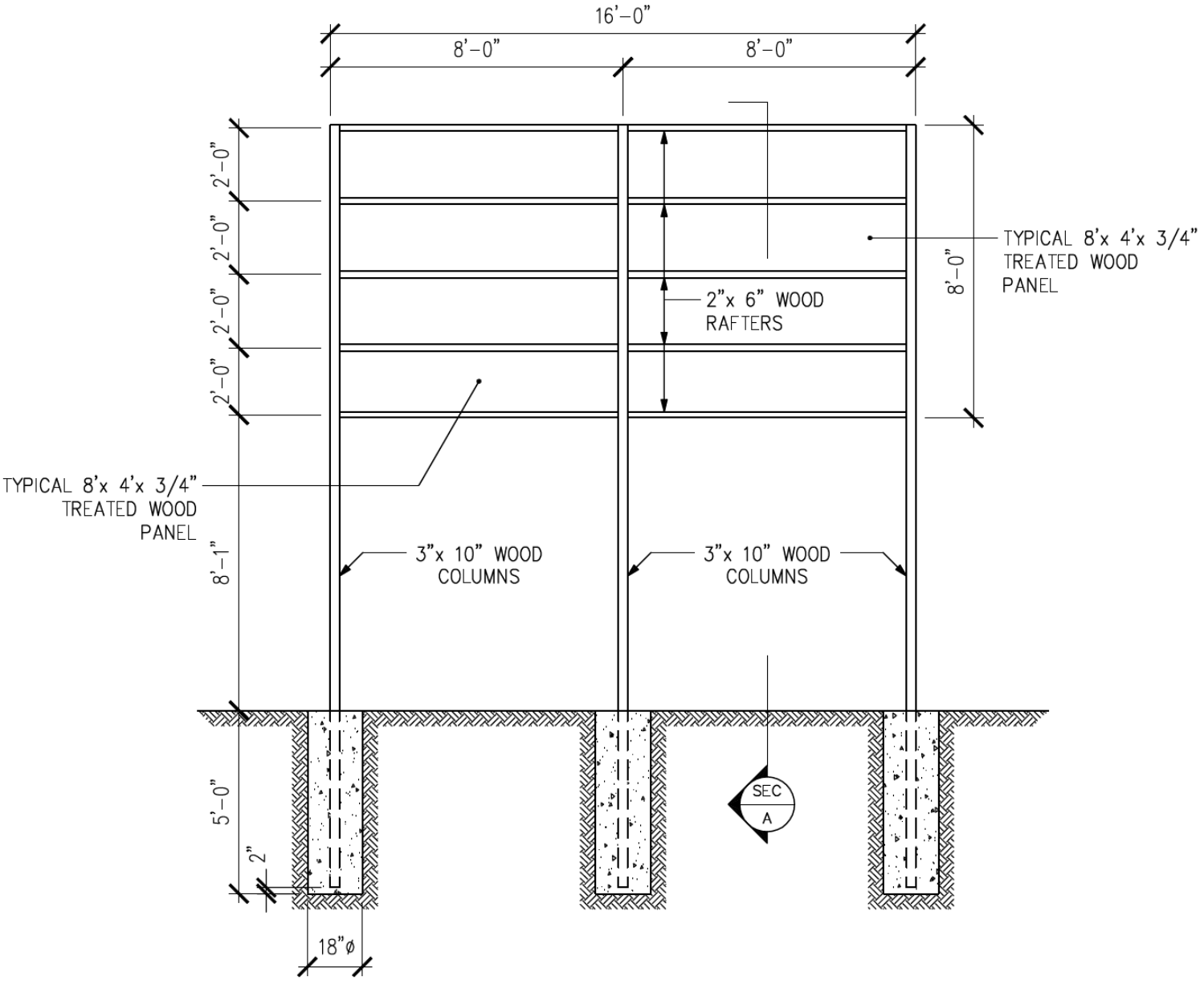

TEMPORARY SIGN ELEVATION

2
C2-04

N.T.S.

NOTES:

1). CONCRETE STRENGTH fc = 3,000 PSI

2). ALL WOOD SECTION SHALL BE TREATED WOOD.

3). THE SIGN SHALL BE VISIBLE FROM THE STREET.

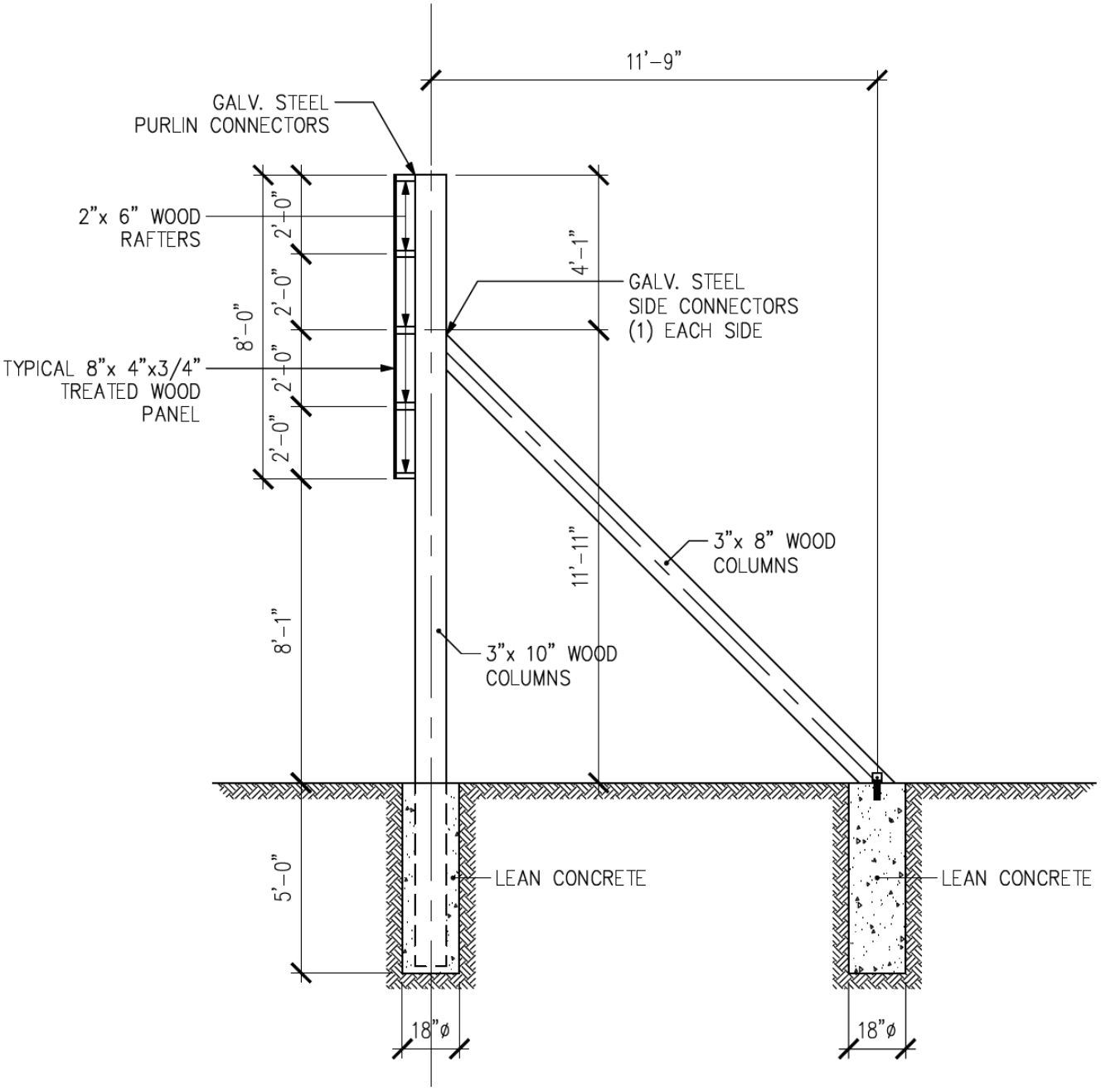

SECTION

N.T.S.

SEC
A

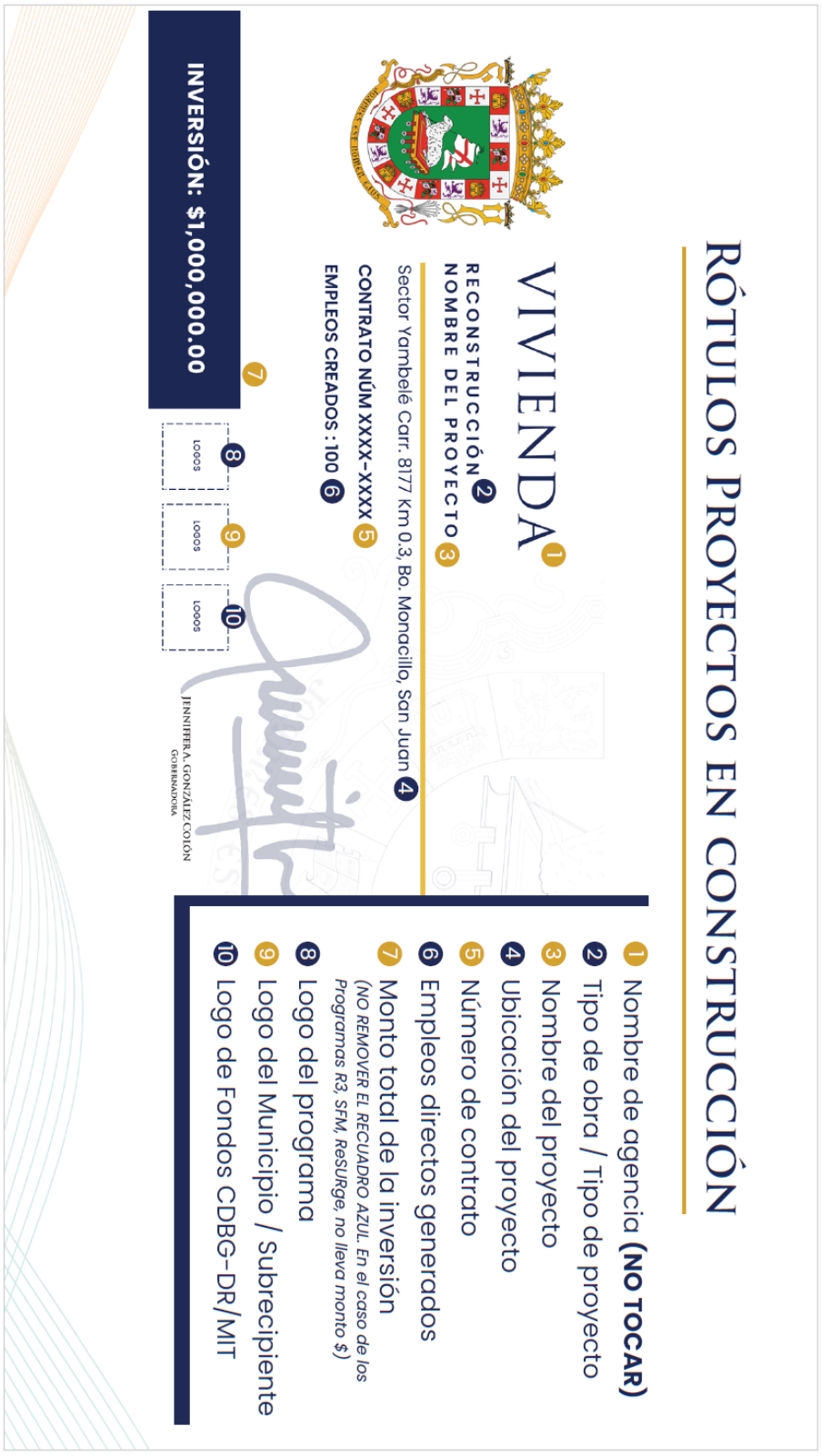

SIGNAGE ART TEMPLATE.

Digital file to be provided by owner.

END OF SECTION

SECTION 02530

SANITARY SEWER SYSTEMS

PART 1 - GENERAL

1.1 SECTION INCLUDES

A. Examination of areas and conditions.

B. Preparation.

C. Installation of PVC piping and fittings.

D. Manhole construction.

E. Application of coatings.

F. Field quality control.

1.2 RELATED SECTIONS

A. Division 1 Sections - General Requirements.

B. Section 02324 - Trenching: Trench Excavation, Pipe Bedding, Haunching, Initial and Final Backfill including Underground Warning Tape.

C. Section 02740 - Asphalt Paving.

D. Section 02750 - Portland Cement Concrete Paving.

E. Section 03300 - Cast In Place Concrete: Manhole construction.

F. Section 07160 - Dampproofing.

1.3 REFERENCES

A. AASHTO M105 - Gray Iron Castings.

B. ASTM A48 - Gray Iron Castings.

C. ASTM C923 - Resilient Connectors Between Reinforced concrete Manhole Structures, Pipes and Laterals.

D. ASTM D3034 - Type PSM Poly (Vinyl-Chloride) (PVC) Sewer Pipe and Fittings.

E. ASTM D3212 - Joints for Drain and Sewer Plastic Pipe Using Flexible Elastomeric Seals.

F. ASTM F477 - Elastomeric Seals (Gaskets) for Joining Plastic Pipe.

1.4 QUALITY ASSURANCE

A. Section 01400 - Quality Requirements.

B. Installer: Minimum five years of documented experience in the installation of sanitary sewer systems.

C. Testing: Perform exfiltration tests in conformance to local jurisdiction regulations. The Contractor shall assign a responsible person to be independent representative to witness testing and to sign as witness of times, pressure and losses of testing media for all testing. Submit to the Architect-Engineer for review a log of all tests made which shall include time, temperature, pressure, water makeup and other readings, necessary to indicate the systems have been operated and tested in the manner outlined herein. After producing the specified test pressure, disconnect the pressurizing source, do not introduce further pressure for the duration of the test period. Repair leaky piping and test. Repeat the procedure until the entire system is proven tight.

1.5 SUBMITTALS

A. Section 01330 - Submittal Procedures.

B. Manufacturer's Data: Submit five copies of the manufacturer's standard drawings or catalog cuts of pipe, fittings, joints and couplings, steps, frames and covers and manhole accessories.

C. Certificates of Compliance: Submit five copies of manufacturer's certificates of compliance for each of the materials specified herein.

D. Record Documents: Accurately record (by means of instrumentation) the following:

1. Actual locations of pipe runs, connections and manholes.

2. Locate by coordinates location of manholes and cleanouts.

3. Invert and top elevation of manholes.

1.6 DELIVERY, HANDLING AND STORAGE

A. Section 01600 - Product Requirements.

B. Piping: Inspect materials delivery to the site for damage; store with minimum of handling. Store materials on site in enclosures or under protective coverings. Store plastic pipe and gaskets under cover out of direct sunlight. Do not store materials directly on the ground. Keep inside of pipes and fittings free of dirt and debris.

C. Metal Items: Check upon arrival; identify and segregate as to types, functions and sizes. Store in a manner affording easy accessibility and not causing excessive rusting or coating with grease or other objectionable materials.

D. Handle pipe, fittings, and other accessories in such manner as to ensure delivery to the trench in sound undamaged condition. Carry pipe to trench; do not drag it. Do not leave rubber gaskets and plastic piping that are not to be installed immediately in the sunlight, but store under cover out of direct sunlight.

PART 2 - PRODUCTS

2.1 MATERIALS - PIPING

A. Polyvinyl Chloride (PVC) Plastic Piping and Fittings: ASTM D3034 SDR 35 (4-inch to 15-inch diameter), with ends suitable for elastomeric gasket joints. Fittings and specials shall conform to the applicable requirements.

2.2 MATERIALS - JOINTS AND JOINTING

A. Polyvinyl Chloride (PVC) Plastic Piping: Joints shall conform to ASTM D3212. Gaskets shall conform to ASTM F477.

2.3 MATERIALS - CLEANOUTS

A. Gray-Iron Cleanouts (Paved Areas): ASME A112.36, 2M, round, gray-iron housing with clamping device and round, secured, scoriated, gray-iron cover. Include gray-iron ferrule with inside calk or spigot connection and countersunk, tapered-thread, brass closure plug.

1. Acceptable Manufacturers:

a. Josam Company

b. Smith, Jay R. Mfg. Co.

c. Zurn Industries, Inc., Zurn Specification Drainage Operation

2. Top-Loading classification: Extra-heavy duty.

3. Sewer Pipe Fitting and Riser to Cleanout: ASTM A74, Service class, cast iron soil pipe and fittings.

B. PVC Cleanouts (Unpaved Areas): PVC body with PVC threaded plug. Include PVC sewer pipe fitting and riser to cleanout of same material as sewer piping.

1. Acceptable Manufacturers:

a. IPS Corporation

b. NDS Inc.

c. Zurn Industries, Inc.; Zurn Light commercial Specialty Plumbing Products.

2.4 MATERIALS - MANHOLES

A. Concrete materials shall be as specified in Section 03300 Cast-In-Place Concrete.

2.5 MATERIALS - CONCRETE

A. Provide as specified on Section 03300.

B. Characteristics of Concrete:

1. Compressive Strength (28 days): 4000 psi.

2. Slump: 4 inches maximum at point of placement.

3. Water/Cement Ratio: 0.50 maximum.

2.6 MATERIALS - METAL PARTS

A. Solid Covers and Frames: ASTM A48 Class 35B and AASHTO M105.

B. Manhole Solid Covers: Model No. R-1659 with Type "A" Lid (Vented) as manufactured by Neenah Foundry Co.

C. Manhole Steps: Model R-1981-Y as manufactured by Neenah Foundry Co.

2.7 MATERIALS - COATINGS

A. Metal Parts: GLID-GUARD T & O Solution Tank Black No. 61774 as manufactured by The Glidden Company.

B. Interior Sides of Manholes: Ceilgard 663 by Master Builders Inc., or Duralkote 313 by Tamms Industries, Inc.

PART 3 - EXECUTION

3.1 INSPECTION

A. Section 01300 - Administrative Requirements.

B. Installer shall examine the areas and conditions under which sanitary sewer system is to be installed. Do not proceed with the work until unsatisfactory conditions have been corrected in a manner acceptable to the Installer.

3.2 EXCAVATION AND PREPARATION FOR SANITARY SEWERS

A. Perform trench excavation for sanitary sewer to line and grade shown in accordance with Section 0 2221 and as modified herein.

B. If the excavation exceeds the indicated dimensions, encase the pipe or install pipe of higher strength.

C. Excavate trenches to provide a uniform continuous bearing and support for the pipe on structure on solid ground between joints.

D. Whenever the character of the material at the bottom of the excavation is found unsuitable, excavate below subgrade to a depth of 3 feet maximum and install either gravel or concrete cradle for whatever distance is required. Subgrade is defined at the underside of the barrel of the pipe or the underside of the masonry structure.

E. Keep all trenches and excavations free of water during construction and until final inspection.

3.3 INSTALLATION - GENERAL

A. Location: The work covered by this section shall terminate at a point approximately 5 feet from the building, unless otherwise indicated on the drawings.

B. Trenching: Do trenching in accordance with Section 02324.

C. Connections to Existing Lines: Make connections to existing lines in an approved manner. Conduct work so that there is minimum interruption of service on existing line.

D. Each pipe and fitting will be inspected before and after installation and those found defective will be rejected.

E. Provide proper facilities for lowering sections of pipe into trenches.

F. Run piping parallel to exterior walls of building unless otherwise indicated.

G. Keep piping free from contact with structure or installed items.

H. Lay piping on a firm sand bedding for the entire trench length except where otherwise directed.

I. Install gaskets in accordance with the manufacturer's printed recommendations.

J. Make joints to other pipe materials in accordance with the recommendations of the plastic pipe manufacturer.

K. Underground Warning Tape: Refer to Section 02324.

3.4 INSTALLATION - PVC PIPING

A. Install pipe and fittings in accordance with the general requirements for installation of pipe lines. Lay pipe in a firm bedding as per Section 02324 for the entire trench length except where otherwise supported. Employ partial backfilling and cradling to secure piping during backfilling operation. Make joints with the gaskets previously specified for joints with this piping. Make joints to other pipe materials in accordance with the recommendations of the plastic pipe manufacturer.

3.5 CLEANING OF PIPE DURING INSTALLATION

A. Clean the interior of pipe of dirt and other superfluous material as the work progresses. Maintain a swab or drag in the line and pull past each joint as it is completed.

B. Place plugs in the ends of uncompleted pipe at the end of the day or whenever work stops.

C. Flush lines between manholes, if required, to remove collected debris.

3.6 MANHOLE CONSTRUCTION

A. Construct base slab and walls of cast in place concrete.

B. Made inverts in cast-in-place concrete with a semicircular bottom conforming to the inside contour of the adjacent sewer sections. Shape inverts accurately and give them a smooth finish. For changes in direction of the sewer and entering branches into the manhole, make a circular curve in the manhole invert of as large a radius as manhole size will permit.

C. Pipe to wall connections shall be provided with ASTM C923 resilient connectors.

D. Cast-In-Place concrete work shall be in accordance with the requirements indicated in Section 03300.

E. Where manholes occur in pavements, set top of frames and covers flush with finish surfaces. Elsewhere, set tops 3 inches above finish surface, unless otherwise indicated.

3.7 COATING APPLICATION

A. Metal Parts: After installation, clean cast iron frames, covers, and steps not buried in masonry or concrete to bare metal of mortar, rust, grease, dirt, and other deleterious materials and apply two (2) coats of bituminous paint.

B. Interior Sides of Manhole: Execute surface preparation of concrete surfaces and apply epoxy coating (30 mils DFT).

3.8 FIELD TESTS AND INSPECTIONS

A. Section 01400 - Quality Requirements.

B. General: The Owner's On Site Representative and/or his authorized representative will conduct field inspections and witness all field tests specified in this section. The Contractor shall perform all field tests and provide all labor, equipment, water and electric power required for testing. The Contractor shall be able to produce evidence, when requested, that any item of work has been constructed properly in accordance with the drawings and specifications.

C. Interior Inspections: Inspect pipe to determine whether line displacement or other damage has occurred. Make inspections after lines between manholes or manhole locations have been installed. If the inspection indicates poor alignment, debris, displaced pipe, infiltration or other defects take whatever steps are necessary to correct such defects.

D. Preparation of the Sewer Line

1. The sewer line shall be free of debris prior to testing.

2. The manholes, the ends of the branches, laterals, wyes and stubs to be included in the test shall be plugged. All plugs shall be secured to prevent leakage blowout due to testing pressure.

E. Pipeline Testing:

1. General: Check each straight run of pipeline for gross deficiencies by holding a light in a manhole; it shall show a practically full circle of light through the pipeline when viewed from the adjoining end of line.

F. Exfiltration Testing

1. Conduct testing from manhole to manhole or between more than two manholes. The length of main tested shall not exceed 700 feet.

2. Determine the groundwater elevation at both ends of the test section. If the groundwater level is less than 2 feet above the crown of the pipe measured from the highest elevation of the sewer, the exfiltration test shall be used.

3. Plug all pipe outlets discharging into the upstream manhole and the test section outlet. Fill the sewer line with water.

4. At the upstream manhole the test head shall be established as minimum of 2 feet above the crown of the pipe, or at least 2 feet above existing groundwater, whichever is higher.

5. Allow the pipe to remain saturated for a period long enough to allow water absorption in the pipe, a minimum of 4 hours and up to a maximum of 72 hours. After the absorption period, refill the pipe to the required test head.

6. Measure the leakage over a timed test period. The minimum test period shall be 15 minutes and the maximum shall not exceed 24 hours.

7. The allowable leakage shall not exceed 50 gallons per inch of pipe diameter per mile in a 24-hour period.

8. If the measured rate of leakage is less than or equal to the allowable leakage, the test section of sewer tested is acceptable.

9. If the test section fails, it shall be repaired and retested in accordance with this procedure. The groundwater elevation shall be redetermined prior to a second test and the test head adjusted, if necessary, in accordance with paragraph 3.11F.4.

G. Deflection Testing

1. Perform a deflection test on entire length of installed plastic pipeline on completion of work adjacent to and over the pipeline, including leakage tests, backfilling, placement of fill, grading, paving, concreting, and any other superimposed loads. Deflection of pipe in the installed pipeline under external loads shall not exceed 4.5 percent of the average inside diameter of pipe. Determine whether the allowable deflection has been exceeded by use of a pull-through device or a deflection measuring device.

   a. Pull-through device: This device shall be a spherical, spheroidal, or elliptical ball, a cylinder, or circular sections fused to a common shaft. Circular sections shall be so spaced on the shaft that distance from external faces of front and back sections will equal or exceed diameter of the circular section. Pull-through device may also be of a design promulgated by the Uni-Bell Plastic Pipe Association, provided that the device meets the applicable requirements specified in this paragraph, including those for diameter of the device. Ball, cylinder, or circular sections shall conform to the following:

1) A diameter, or minor diameter as applicable, of 95 percent of the average inside diameter of the pipe; tolerance of plus 0.5 percent will be permitted.

2) A homogeneous material throughout, with a density greater than 1.0 as related to water at 4 degrees C 39.2 degrees F, and a surface Brinell hardness of not less than 150.

3) Center bored and through bolted with a 6 mm 1/4 inch minimum diameter steel shaft having a yield strength of not less than 483 MPa 70,000 pounds per square inch, with eyes or loops at each end for attaching pulling cables.

4) Each eye or loop shall be suitably backed with a flange or heavy washer such that a pull exerted on opposite end of shaft will produce compression throughout remote end.

b. Deflection measuring device: Sensitive to 1.0 percent of the diameter of the pipe being tested and accurate to 1.0 percent of the indicated dimension. Deflection measuring device shall be approved by the Contracting Officer prior to use.

2. Pull-through device: Pass the pull-through device through each run of pipe, either by pulling it through or flushing it through with water. If the device fails to pass freely through a pipe run, replace pipe which has the excessive deflection and completely retest in same manner and under same conditions as specified.

3. Deflection measuring device procedure: Measure deflections through each run of installed pipe. If deflection readings in excess of 4.5 percent of average inside diameter of pipe are obtained, retest pipe by a run from the opposite direction. If retest continues to show a deflection in excess of 4.5 percent of average inside diameter of pipe, remove pipe which has excessive deflection, replace with new pipe, and completely retest in same manner and under same conditions.

4. Warranty period test: Pipe found to have a deflection of greater than 5 percent of average inside diameter when deflection test is performed just prior to end of one-year warranty period shall be replaced with new pipe and tested as specified for leakage and deflection.

H. Field Tests for Concrete

1. Field testing requirements are covered in Section 03300.

END OF SECTION

SECTION 02830

CHAIN LINK FENCES

PART 1 - GENERAL

1.1 SUMMARY

A. Provide chain link fencing and gates as indicated in the Drawings, as specified herein, and as needed for a complete and proper installation.

B. Related work:

1. Documents affecting work of this Section include, but are not necessarily limited to, General Conditions and Special Conditions.

1.2 SUBMITTALS

A. Comply with pertinent provisions of Section 01340.

B. Product data: Within 35 calendar days after the Contractor has received the Owner's Notice to Proceed, submit:

1. Materials list of items proposed to be provided under this Section;

2. Manufacturer's specifications and other data needed to prove compliance with the specified requirements;

3. Shop Drawings in sufficient detail to show fabrication, installation, anchorage, and interface of the work of this Section with the work of adjacent trades;

4. Manufacturer's recommended installation procedures which, when approved by the Engineer, will become the basis for accepting or rejecting actual installation procedures used on the Work.

1.3 QUALITY ASSURANCE

A. Use adequate numbers of skilled workmen who are thoroughly trained and experienced in the necessary crafts and who are completely familiar with the specified requirements and the methods needed for proper performance of the work of this Section.

PART 2 - PRODUCTS

2.1 DIMENSIONAL DATA

A. General:

1. Pipe size indicated are commercial pipe sizes.

2. Tube sizes indicated are nominal outside dimensions.

3. H-section sizes indicated are normal flange dimensions.

4. Roll-formed section sizes indicated are the nominal outside dimensions.

2.2 GALVANIZING

A. On steel framework and appurtenances, provide galvanized finish with not less than the following weight of zinc per sq ft.

1. Pipe: 1.8 oz, complying with ASTM A120.

2. H-sections and square tubing: 2.0 oz, complying with ASTM A123.

3. Hardware and accessories: Comply with Table I of ASTM A153.

4. Fabric: 1.2 oz. min., complying with class I of ASTM A392-84. Galvanizing of steel wire may be after or before woven.

2.3 FABRIC

A. Provide number 9 gage (stell wire gage) zinc costed fence fabric in 2" diamond mesh, with top and bottom selvages twisted and barbed, 1.2 oz galv., class 1 coating in accordance with ASTM A392-84.

B. Provide fabric in one piece widths.

2.4 POSTS, RAILS, AND ASSOCIATED ITEMS

A. End, corner, slope, and pull posts: Provide at least the following minimum sizes and weights:

Material and dimensions:	Lbs per lin ft:
Pipe, 2.875 outside dimension:	5.79
Tubing, 2-1/2" square"	5.70
Roll-formed section, 3-1/2" X 3-1/2":	5.14

B. Line posts: Provide minimum sizes and weights as follows:

Material and dimension:	Lbs per lin ft:
Pipe, 2.375 outside dimension:	3.65
H-section, 2.25 X 1.95 X 0.143":	0.10

C. Gate posts: Provide gate posts for supporting single gate leaf, or one leaf of a double gate installation, for nominal gate widths as follows:

Material and dimension:	Lbs per lin ft:
Pipe, 4" outside dimension:	9.10
Tubing, 3" square:	9.10
H-section, 4":	14.00

1. over 13 feet wide, and up to 20 feet wide: Use 6.625" outside diameter pipe weighing 18.97 lbs per lin ft.

2. Over 20 feet wide: Use 8.625" outside diameter pipe weighing 24.70 lbs per lin ft.

D. Top rails:

1. Use 1.66" outside diameter pipe weighing 1.806 lbs per lin ft; or

2. Use 1.625" X 1.25" roll-formed sections weighing 1.35 lbs per lin ft.

3. Provide in manufacturer's longest lengths, with expansion type couplings approximately 6" long for each joint.

4. Provide means for attaching top rail securely to each gate, corner, pull, slope, and end post.

E. Post brace assemblies:

1. Provide at end and gate posts, and at both sides of corner, slope, and pull posts, with the horizontal brace located at mid-height of the fabric.

2. Use 1.66" outside diameter pipe weighing 1.35 lbs per lin ft for horizontal brace.

3. Use 3/8" diameter rod with turnbuckle for diagonal truss.

F. Tension wire: Provide number 7 gage galvanized coiled spring wire at bottom of fabric.

G. Post tops:

1. Provide galvanized steel, designed as weathertight closure cap.

2. Provide one cap for each post.

3. Provide caps with openings to permit trough passage of top rail.

H. Stretcher bars:

1. Provide one-piece lengths equal to full height of fabric, with a minimum cross-section of 3/16" x 3/4".

2. Provide on stretcher bar for each gate and end post, and two for each corner, slope, and pull post, except where fabric is woven integrally into the post.

I. Stretcher bar bands:

1. Provide galvanized steel, spaced not over 15" on centers, to secure stretcher bars to end, corner, pull, slope, and gate posts.

2. Bands may be used also with special fittings for securing rails to end, corner, pull, slope, and gate posts.

2.5 GATES

A. General:

1. Fabricate gate perimeter frames of tubular members.

2. Provide additional horizontal and vertical members to assure proper operation of the gate, and for attachment of fabric, hardware, and accessories.

3. Space so frame members are not more than 8 feet apart.

4. Fabricate gate frames from:

Material and dimensions:	Lbs per lin ft:
Pipe 1.66" outside diameter	1.806 (8' - 0" or less width)
Pipe 1.90" outside diameter	2.72 (8' - 0" and over)

Fabrication:

1. Assemble gate frames by welding with special malleable or pressed steel fittings and rivets for rigid connections.

2. Use same fabric as used in the fence.

3. Install fabric with stretcher bars at vertical edges as a minimum.

4. Attach stretchers to gate frame at not more than 15" on centers.

5. Attach hardware with rivets or by other means which will provide security against removal and breakage.

6. Provide diagonal cross-bracing consisting of 3/8" diameter adjustable length truss rods on gates where required to provide frame rigidity without sag or twist.

C. Gate hardware: Provide following for each gate:

1. Hinges:

   a. Pressed Hot-Dip galvanized steel to suit the gate size; non-lift-off type.

2. Latches:

   a. Provide forked type to permit operation from either side of the gate.

   b. Provide padlock eye as integral part of latch.

3. Keeper: Provide keeper for vehicle gates, which automatically engages the gate leaf and holds it in the open position until manually released.

4. Double gates:

   a. Provide gate stops for double gates consisting of mushroom or flush plate, with anchors.

   b. Set in concrete to engage the center drop rod or plunger bar.

   c. Provide locking device and padlock eyes as an integral part of the latch, requiring one padlock for locking both gate leaves.

2.6 MISCELLANEOUS MATERIALS AND ACCESSORIES

A. Wire ties:

1. For tying fabric to line posts, use number 9 gage wire ties spaced 12" on centers.

2. For tying fabric to rails and braces, use number 9 gage wire ties spaced 24" on centers.

3. For tying fabric to tension wire, use number 11 gage hog rings spaced 24" on centers.

4. Manufacturer's standard wire ties will be acceptable if of equal strength and durability.

B. Concrete: Comply with pertinent provisions for concrete for 2500 psi concrete.

PART 3 - EXECUTION

3.1 SURFACE CONDITIONS

A. Examine the areas and conditions under which work of this Section will be performed. Correct Conditions detrimental to timely and proper completion of the Work. Do not proceed until unsatisfactory conditions are corrected.

3.2 INSTALLATION

A. General:

1. Install posts at a maximum spacing of 10 feet on centers.

2. Install corner or slope posts where changes in line or grade exceed a 30 degree deflection.

B. Excavating:

1. Drill holes for post footings in firm, undisturbed or compacted soil, strictly adhering to the dimensions and spacing shown.

2. Post hole dimensions:

a. Provide 30" deep by 8" diameter foundations for line posts for 5 foot fabric height and less.

b. Provide 30" deep by 8" diameter foundations for line posts for fabric heights exceeding 5 feet.

c. Provide 36" deep by 12" diameter foundations for all other posts.

3. Spread soil from excavations uniformly adjacent to the fence line, or on adjacent areas of the site if so directed.

4. When solid rock is encountered near the surface, drill into rock at least 12" for line posts and at least 18" for end, pull, gate, and corner posts. Drill hole at least 1" greater diameter than the largest dimension of the post to be placed.

5. If solid rock is below soil overburden, drill to full depth required, except penetration into rock need not exceed minimum depths specified above.

C. Setting posts:

1. Remove loose and foreign materials from sides and bottoms of holes, and moisten soil prior to placing concrete.

2. Center and align posts in holes.

3. Place concrete around posts in a continuous pour, and vibrate or tamp for consolidation.

4. Check each post for vertical and top alignment, and hold in position during placement and finishing operations.

5. Trowel tops of footings, and slope or dome to direct water away from posts.

6. Extend footings for gate posts to the underside of bottom hinge.

7. Set keeps, stops, sleeves, and other accessories into concrete as required.

8. Keep exposed concrete surfaces moist for at least seven days after placement, or cure with membrane curing material or other curing method approved by the Architect.

9. Grout-in those posts which are set into sleeved holes, concrete constructions, or rock excavations, using nonshrink Portland cement grout or other grouting material approved by the Architect.

D. Concrete strength:

1. Allow concrete to attain at least 75% of its minimum 28-day strength before rails, tension wires, and/or fabric is installed.

2. Do not, in any case, install such items in less than seven days after placement of concrete.

3. Do not stretch and tension fabric and wire, and do not hang gates, until concrete has attained its full design strength.

E. Rails and bracing:

1. Install fence with a top rail and bottom tension wire.

2. Install top rails continuously through post caps or extension arms, bending to radius for curved runs.

3. Provide expansion couplings as recommended by the fencing manufacturer.

4. Provide bracing to the midpoint of the nearest line post or posts at all end, corner, slope, pull, and gate posts.

5. Install tension wires parallel to the line of fabric by weaving through the fabric, and tying to each post with not less than number 6 gage galvanized wire, or by securing the wire to the fabric.

F. Installing fabric:

1. Leave approximately 2" between finish grade and bottom selvage.

2. Excavate high points in the ground to clear the bottom of the fence.

3. Place and compact fill to within 1" of the bottom of the fabric in depressions.

4. Pull fabric taut and tie to posts, rails, and tension wires.

5. Install fabric on outward side facing side of fence, and anchor to framework so that the fabric remains in tension after pulling force is removed.

6. Install stretcher bars by threading through or clamping to fabric on 4" centers, and secure to posts with metal bands spaced 15" on centers.

G. Installing gates:

1. Install gates plumb, level, and secure for full opening without interference.

2. Install ground-set items in concrete for anchorage in accordance with the fence manufacturer's recommendations as approved by the Architect.

3. Lubricate and adjust the hardware for smooth operations.

H. Miscellaneous:

1. Use U-shaped tie wires, conforming to diameter of pipe to which attached, clasping pipe and fabric firmly with ends twisted at least two full turns.

2. Bend ends of wire to minimize hazards to persons and clothing.

3. Fasteners:

   a. Install nuts for tension band and hardware bolts on side of fence opposite fabric side.

   b. Peen the ends of bolts to prevent removal of nuts.

4. Repair coatings damaged in the shop or field erection, using a hot-applied repair compound applied in accordance with its manufacturer's recommendations as approved by the Architect.

END OF SECTION

Guia de Especificaciones Mínimas Sistema de Impermeabilzación de Techos – PRIDCO

1. Remoción y disposición de material impermeabilizador existente en un vertedero autorizado, de ser necesario.
2. Limpieza de sistema existente y/o corrección de "blíster" o material suelto, según aplique.
3. Aplicación de "Primer", según recomendación del manufacturero.
4. Instalación mecánica (metal deck) o con adhesivo (poretes), de aislación en Isocianurato de 1.5" mínimas de espesor.
5. El anclaje con tornillos sobre "metal deck" debe ser como mínimo según el siguiente patrón: 0.5 tornillos por pie cuadrado (0.50 T/p.c.) en el "field", 0.75 T/p.c. en el perímetro y 1 T/p.c. en las esquinas. Ver anejo A.
6. No es permitido instalación de aislación con tornillos ,de forma temporera o permanente, sobre poretes o vigas doble "T" en hormigón. Se recomienda el uso de adhesivo instantáneo para sistemas de techo.
7. El anclaje mecánico deberá ser como mínimo similar a: tornillo # 14 cónico y chapa redondas Heavy Duty de 3" de diámetro.
8. La membrana base debe ser en fibra de vidrio de 2.2 milímetros de espesor mínimo.
9. La membrana tope debe ser en poliéster de 3.8 milímetros de espesor mínimo, con las terminaciones correspondientes.
10. Los "flashing" y canales deben ser en aluminio gage 0.032. Ver detalle B.

Rev. 2017-10-16

Anejo A

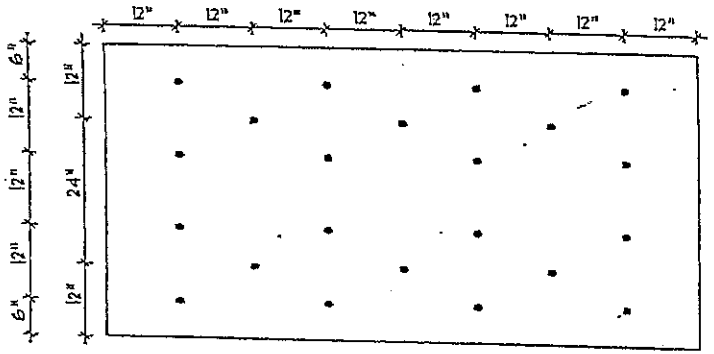

4' x 8' BOARD
ROOF FIELD
~~22~~ FASTENERS/BOARD
16

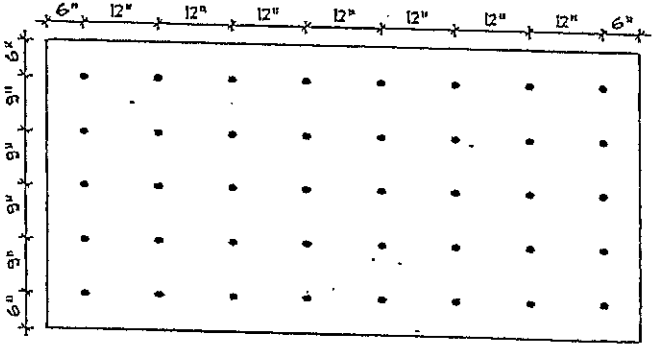

4' x 8' BOARD
ROOF PERIMETER
~~18~~ FASTENERS/BOARD
24

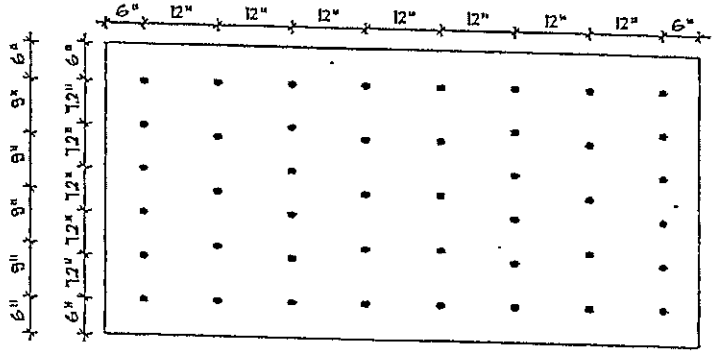

4' x 8' BOARD
ROOF CORNER
~~44~~ FASTENERS/BOARD
32

INSULATION PATTERN

Anejo A
PROYECTO CFI:
, PR

Anejo

FLASHING DETAIL - B

NOT TO SCALE

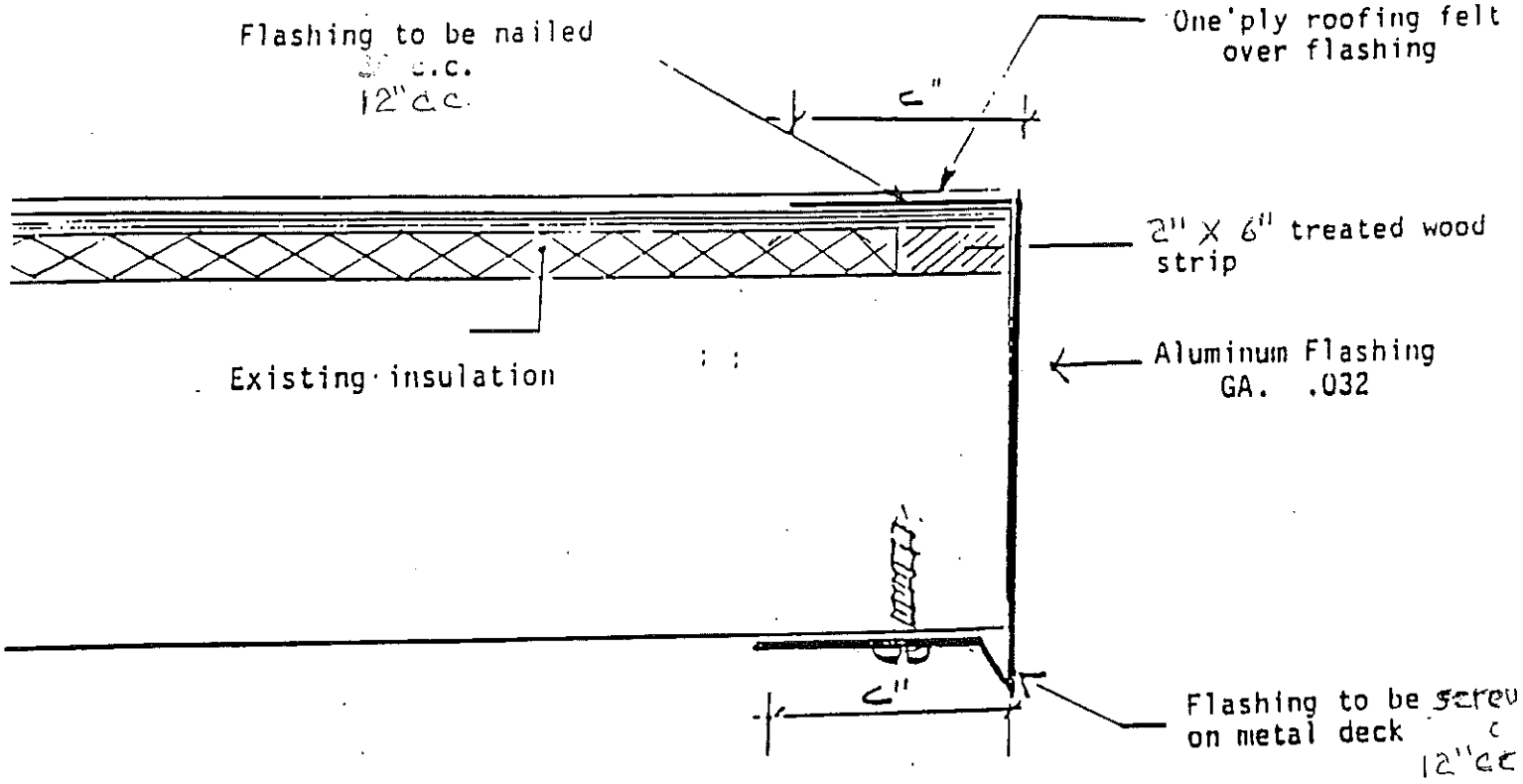

Roofing Specifications

PART I - GENERAL

1.1 SUBMITTALS

A. Product data: Within 10 calendar, days after the Contractor has received the Owner's Notice Proceed submit:

1. Materials list of items proposed to be provided under this Section.

2. Manufacturer's specifications and other data needed to prove compliance with the specified requirements.

3. Manufacturer's recommended installation procedures which, when approved by the Engineer, will become the basis for accepting or rejecting actual installation procedures used on the work.

1.2 QUALITY ASSURANCE

A. Use adequate numbers of skilled workmen who are thoroughly trained and experienced in the necessary crafts and who are completely familiar with the specified requirements and the methods needed for proper performance of the work of this Section.

B. Use of subcontractor is not allowed.

C. Comply with codes, ordinances, rules and regulations of all governmental authorities having jurisdiction on the work, and with the following standards as applicable to the work:

D. Any approved agency having a service for the inspection of material and finished products during manufacture.

1.3 REFERENCES

ASTM - American Society of Testing and Materials

FM - Factory Mutual

OSHA - Occupational Safety and Health Administration

UL - Underwriters Laboratories, Inc.

NFPA - National Wire Protection Association

1.4 DELIVERY, STORAGE, AND HADLING

A. Comply with pertinent provisions of manufacturers recommendations.

PART 2 - PRODUCTS

2.1 SBS MODIFIED BITIMINOUS (COLD) SYSTEM

A. Two (2) Ply Styrene Butadiene Styrene (SBS) Modified Bituminous Composite Reinforcement Roofing System Consists of:

1. One (1) Ply as Base consisting of glass fiber reinforcement SBS Modified Bituminous Membrane. The material shall meet or exceed the requirements of ASTM 6163-00 Type I Grade S.

• Thickness, min.,mils (mm)	80 (2.0)
• Net mass/ unit area, min lbs/100 fts^2 (g/m^2)	45(2197)
• Max. load at 0 ± 3.6˚F (-18 ± 2˚C), MD and XMD, min., before and after Heat conditioning, lbf/in (KN/M)	70(12.3)
• Elongation at 0± 3.6 F (-18 ± 2˚C), Before and after heat conditioning, (%)	1
• Elongation at 73.4± 3.6 F(23 ± 2˚C), MD and XMD, min., at max. load, Before and after heat conditioning, (%)	2
• Tear strength at 73.4˚ ± 3.6˚F (23 ± 2˚C)	35(156)
• Roll Min. Weight Per 100 sq. ft.	45 Lbs. (20.5 Kg.)

2. One (1) Ply as Cap Roll Surfacing, consisting of a Polyester Reinforced SBS Modified Ceramic Granule Covered Modified Bituminous Membrane. Material shall meet or exceed ASTM D5147 Standard Test Method and requirements of ASTM D 6164-00Type I Grade G and UBC Standard 15-6-E, Standard Specification for SBS Modified Bituminous Sheet Materials Using Polyester Reinforcement.

• Tickname, min., mills (mm)	130 (3.3)
• Net mass/unit area, min lbs/100ft^2 (g/m^2)	75 (3661)
• Max. load at 0 ± 3.6˚f (-18 ± 2˚C), MD and XMD, min., before and after Heat conditioning, lbf/in (KN/M)	70 (12.3)
• Elongation at 0 ± 3.6 F (-18 ± 2˚C), Before and after heat conditioning, (%)	20
• Elongation at 73.4 ± 3.6 F (23 ± 2˚C),	35

MD and XMD, min., at max, load, before
And after heat conditioning, (%)

- Tear strength at 73.4° ± 3.6°F (23 ± 2°C), Min., lbf (N) — 55 (246)
- Roll Min. Weight Per 100 Sq. Ft. — 75 LBS. (34.1 Kg.)

3. Cold Adhesive: Polymer (SBS) Modified Bitumen Adhesive (MBA) Solvent Based Cold Process Asphaltic Adhesive, Asbestos Free, Specially Formulated to Bond Modified Membranas to Insulation and other Membranes, in Compliance To ASTM 3019 Type III And ASTM D3409. Application requires min. 1.5 gallons Per Square in smooth surface, as required in UBC. Approximate weight: 10 Pounds per Gallons or 50 Lbs. Per Gallons Per Pail.

4. Flashing, cants, stops, insulation anchorage and accessories acceptable to the Roofing Systems Manufacturer.

B. Installed (Cold) SBS System Quality Assurance

1. Weight of Assembled System (Cold) — 168 Lbs./100 Ft.²

- Component Minimum Weights

a. Mineral Surfaced SBS Modified Granular Surfaced Bitumen Membrane (One Each) — 75 Lbs.

b. Modified Bitumen Adhesive For Cap (One Spread) — 18 Lbs.

c. Glass Fiber Reinforcement Bitumen SBS Modified Bituminous Membrane (One Each) — 45 Lbs.

d. Modified Bitumen Adhesive For Base (One Spread) over insulation board 3gal/100sq. ft.) — 30 Lbs.

PART 3 - EXECUTION

3.1 INSTALLATION PROCEDURE AND REQUIREMENTS

Strictly follow manufacturer's specifications for installation.

3.2 APPLICATION OF INSULATION AND ROOFING:

1. Apply insulation, cold adhesive, or membranes over clean dry roof deck in strict conformance with the manufacturer's specifications.

2. Cant strips shall be provided at all intersections of roof surfaces with vertical walls, parapets and curbs. Roofing layers shall be turned up against cant strip and trimmed parallel with upper edge of cant strip.

3. Roofing shall fit neatly around all pipes, vents, drains, smoke vents and curbs and be sealed with plastic roof cement. Metal flanges of smoke vents, pipes, fans, etc., shall be embedded in cold adhesive between layers of roofing. Edges shall be sealed in roofing with 6" wide cold adhesive saturated web fabric, mopped on.

4. At all open edges, treated wood blocking, equal in thickness to the insulation, shall be firmly fastened to the roof decking as indicated on the drawings. Around all roof openings, vents, stacks, drains, etc., treated wood blocking nailer strips shall be installed and securely fastened to the metal deck.

5. Flashings: Aluminum metal as specified in the drawings attached.

6. All materials shall be applied over a clean, dry insulation board as specified by the manufacturer.

3.3 SITE CONDITIONS

1. The Contractor shall at all times keep materials and equipment in orderly, safe arrangement, minimize conflicts with other trades, protect surrounding existing building and equipment.

2. At the completion of the work, or whenever directed, the contractor shall remove all rubbish and unused materials accumulated in connection with the work, and leave the roofs in a clean and acceptable condition.

3. Strictly comply with all safety regulations.

3.4 APPROVALS

1. All roofing materials method of application and method of fastening shall conform to UCB requirements for Class I-120 uplift and UCB Class A Roof. Evidence of compliance is required for submittals approval.

2. All materials shall be delivered in packages bearing the manufacturer's label or identifying mark. Each package of asphalt shingles, mineral surfaced roll roofing, life-retardant-treated wood shingles and shakes, modified bitumen, thermoplastic and thermoset membranes, and build-up roofing ply materials shall bear the label of an approved agency having a service for the inspection of material and finished products during manufacture.

3.5 GUARANTEE:

Roofing and flashing shall be guaranteed to remain water tight and in good conditions for a period of twelve (12) years from the date of acceptance of the work by the owner. The Contractor shall provided bonded roof guarantee through a surety Company for the total cost of the roofing work, or other guarantee acceptable to the Owner to make any repair and replacement needed on the roof without any additional cost to the Owner, for any part of the roof that fails to meet the guarantee during that period.

In lieu of the written bonded roof guarantee through a surety Company referred to above, the Contractor may file with the Owner a 12 years guarantee of a responsible manufacturer of the materials used or to be used in the roofing work; provide, however, that in consideration thereof, the Contractor hereby authorizes the Owner (1) to proceed with and make any roof repairs for the account and at the expenses of the Contractor in the event the later or any

subcontractor thereof fails to undertakes such work within 7 days after being requested in writing to do so as an obligation included in the guarantee of the Contractor, any amounts expended by the owner pursuant to (1) above, as well as the amount of any claim, action or demand of the Owner against the Contractor, predicated upon or arising from such roofing work so guaranteed by the Contractor.

SBS MODIFIED BITUMEN (COLD) MEMBRANE ROOFING

SPECIFICATIONS:

PART 1 – GENERAL

1.1 SUBMITTALS

A. Product Data: Within 10 calendar days after the Contractor has received the Owner's Notice To Proceed The Roofing:

1. Materials list of items included in proposed system to be installed under this Section.

2. Manufacturer's Specifications and other data needed to ensure system compliance with the specified requirements.

3. Manufacturer's recommended installation procedures which, when approved by the Engineer, will become the basis for accepting or rejecting actual installation procedures used on the work.

1.2 QUALITY ASSURANCE

A. Use adequate numbers of skilled workmen who are thoroughly trained and experienced in the necessary crafts and who are completely familiar with the specified materials, requirements and the methods needed for proper performance of the work of this Section.

B. Use of a subcontractor. Name and Qualifications must be approved in advance.

C. Comply with applicable codes, including but not limited to UBC-97. Ordinances, rules and regulations of all governmental authorities having jurisdiction on the work, and with the required standards as applicable to the work must be complied with.

D. All materials used must show in their original individual packaging markings of an approved agency having a service for the inspection of materials and finished products during manufacture.

1.3 REFERENCES

A.	UBC	Uniform Building Code.
B.	UL	Underwriters Laboratories, Inc.
C.	FM	Factory Mutual
D.	ASTM	American Society Of Testing And Materials
E.	OSHA	Occupational Safety And Health Administration
F.	NRCA	National Roofing Contractors Association

1.4 DELIVERY, STORAGE AND HANDLING

A. Comply with pertinent provisions of manufacturer recommendations.

B. All products delivered to job site must retain and show original packaging and warning labels, including UL, FM ASTM listing marks and any other approved agency listings required.

PART 2 - PRODUCTS

2.1 SBS MODIFIED BITUMINOUS (COLD) SYSTEM

A. Two (2) Ply Styrene Butadiene Styrene (SBS) Modified Bituminous Composite Reinforcement Roofing System consists of:

1. One (1) Ply as Base consisting of glass fiber reinforcement SBS Modified Bituminous Membrane. The material shall meet or exceed the requirements of ASTM 6163-00 Type I Grade S.

• Thickness, min.,mils(mm)	80(20)
• Net mass/ unit area, min lbs/100ft² (g/m²)	45(2197)
• Max. load at 0±3.6°F (-18 ± 2°C), MD and XMD, min., before and after Heat conditioning, lbf/in (KN/M)	70(12.3)
• Elongation at 0± 3.6 F(-18± 2°C),	1

Before and after heat conditioning,(%)

- Elongation at 73.4± 3.6 F(23± 2°C), MD and XMD, min., at max. load, Before and after heat conditioning, (%) — 2
- Tear strength at 73.4°±3.6°F(23±2°C), Min.,lbf(N) — 35(156)
- Roll Min. Weight Per 100 Sq. Ft. — 45Lbs. (20.5 Kg.)

2. One (1) Ply as Cap Roll Surfacing, consisting of a Polyester Reinforced SBS Modified Ceramic Granule Covered Modified Bituminous Membrane. Material shall meet or exceed ASTM D 5147 Standard Test Method and requirements of ASTM D 6164-00 Type I Grade G and UBC Standard 15-6-E, Standard Specification for SBS Modified Bituminous Sheet Materials Using Polyester Reinforcement.

- Thickness, min.,mils(mm) — 130(3.3)
- Net mass/ unit area, min lbs/100ft² (g/m²) — 75(3661)
- Max. load at 0±3.6°F (-18 ± 2°C), MD and XMD, min., before and after Heat conditioning, lbf/in (KN/M) , — 70 (12.3) ~~100(15.6)~~
- Elongation at 0± 3.6 F(-18± 2°C), Before and after heat conditioning, (%) — 20
- Elongation at 73.4± 3.6 F(23± 2°C), MD and XMD, min., at max. load, Before and after heat conditioning, (%) — 35
- Tear strength at 73.4°±3.6°F(23±2°C), Min.,lbf(N) — 55(246)
- Roll Min. Weight Per 100 Sq. Ft. — 75Lbs. (34.1 Kg.)

3. Cold Adhesive: Polymer (SBS) Modified Bitumen Adhesive (MBA) Solvent Based Cold Process Asphaltic Adhesive, Asbestos Free, Specially Formulated to Bond Modified Membranes to Insulation And Other Membranes, in Compliance To ASTM 3019 Type III And ASTM D 3409. Application requires min.1.5 Gallons Per Square in smooth

surface, as required in UBC. Approximate weight: 10 Pounds per Gallon or 50 Lbs. Per 5 Gallons Per Pail.

4. Flashing, cants, stops, insulation anchorage and accessories acceptable to the Roofing System Manufacturer.

B. Installed (Cold) SBS System Quality Assurance

1. Weight of Assembled System (Cold) (Sum Of Components) (Dry Aged Cured) 168 Lbs./100 Ft.^{2}

- Component Minimum Weights

a. Mineral Surfaced SBS Modified Granular Surfaced Bitumen Membrane (One Each) 75 Lbs.

b. Modified Bitumen Adhesive For Cap (One Spread) 18 Lbs.

c. Glass Fiber Reinforcement Bitumen SBS Modified Bituminous Membrane (One Each) 45 Lbs.

d. Modified Bitumen Adhesive For Base (One Spread) over insulation board 3gal/100sq.ft 30 Lbs.

PART 3 - EXECUTION

3.1 INSTALLATION PROCEDURE AND REQUIREMENTS

A. Follow system manufacturer specifications for installation procedures.

B. Follow NRCA published guidelines in absence of any other instructions.

3.2 APPLICATION OF INSULATION AND ROOFING

A. Apply insulation, Modified Roofing Membranes and Cold Adhesive over clean dry roof deck in strict conformance with the Manufacture's Specifications.

B. Non-Combustible (Fire Rated) Cant Strip shall be provided at all intersections of roof surfaces with vertical walls, parapets and curbs. Roofing layers shall be tuned up against cant strips and trimmed one inch above and parallel with upper edge of Cant Strip.

C. Roofing shall fit neatly around all pipes, vents, drains, smoke vents and curbs and be sealed with plastic roof cement. Metal flanges of smoke vents, pipes, fans, etc., shall be embedded in asphalt between layers of roofing. Edges shall be sealed in roofing with 6" wide asphalt-saturated web fabric, mopped on.

D. At all open edges, treated wood blocking, equal in thickness to the insulation, shall be firmly fastened to the roof decking as indicated in the drawings. Around all roof openings, vents, stacks, drains, etc., treated wood blocking nailer strips shall be installed and securely fastened to the metal deck.

E. Alternate: Cold Process Modified Bitumen Adhesive Roofing (MBA/MBR) conforming with ASTM D 3019 Type III And ASTM D 3409-81 Low Solvent Adhesive Specially Formulated For The Bonding of Modified Bitumen Membranes, in lieu of Hot Roofing Asphalt.

F. Flashings: Provide and Install Aluminum Metal as specified in the drawings provided.

G. All materials shall be applied over a clean, dry insulation board secured to deck as specified by the Manufacturer.

3.3 SITE CONDITIONS

A. The Contractor shall, at all times, keep materials and equipment in orderly, safe arrangement, minimize conflicts with other trades, protect surrounding existing building and equipment.

B. At the completion of the work, or whenever directed, the Contractor shall remove all rubbish and unused materials accumulated in connection with the work, and leave the roofs in a clean and acceptable condition.

C. Strictly comply with all safety regulations. Maintain at all times fire extinguishers at kettle and roof areas.

3.4 APPROVAL

A. For roofing covering to be install, the method of application and the method of fastening shall conform to UBC,FM for class I-120 wind uplift and U.L. Class A Roof requirements. Evidence of compliance is required for submittal approval.

3.5 GUARANTEE

Roofing and flashing shall be guarantee to remain water tight and in good conditions for a period of ~~ten (10)~~ 12. years from the date of acceptance of the work by the owner. The Contractor shall provide a bonded roof guarantee through a Local Surety Company registered with the local Insurance Commissioner's Office for the total cost of the roofing work, or other Guarantee acceptable to the Owner to make any repair and replacement needed on the roof without any additional cost to the Owner, for any part of the roof that fails to meet the water tightness guarantee during that period.

In lieu of the written bonded roof guarantee through a Puerto Rico Insurance Commissioner Recognized Surety Company referred to above, the Contractor may file with the Owner a ~~Ten (10)~~ 12. Year Guarantee of a locally represented responsible manufacturer of the materials used or to be used in the roofing work; provide, however, that in consideration thereof, the Contractor hereby authorizes the Owner (1) to proceed with and make any roof repairs for the account and at the expenses of the Contractor in the event the later or any subcontractor thereof fails to undertakes such work within seven (7) days after being requested in writing to do so as an obligation included in the Guarantee of the Contractor, any amount of any claim, action or demand of the Owner against the Contractor, predicated upon or arising from such roofing work so guaranteed by the Contractor.

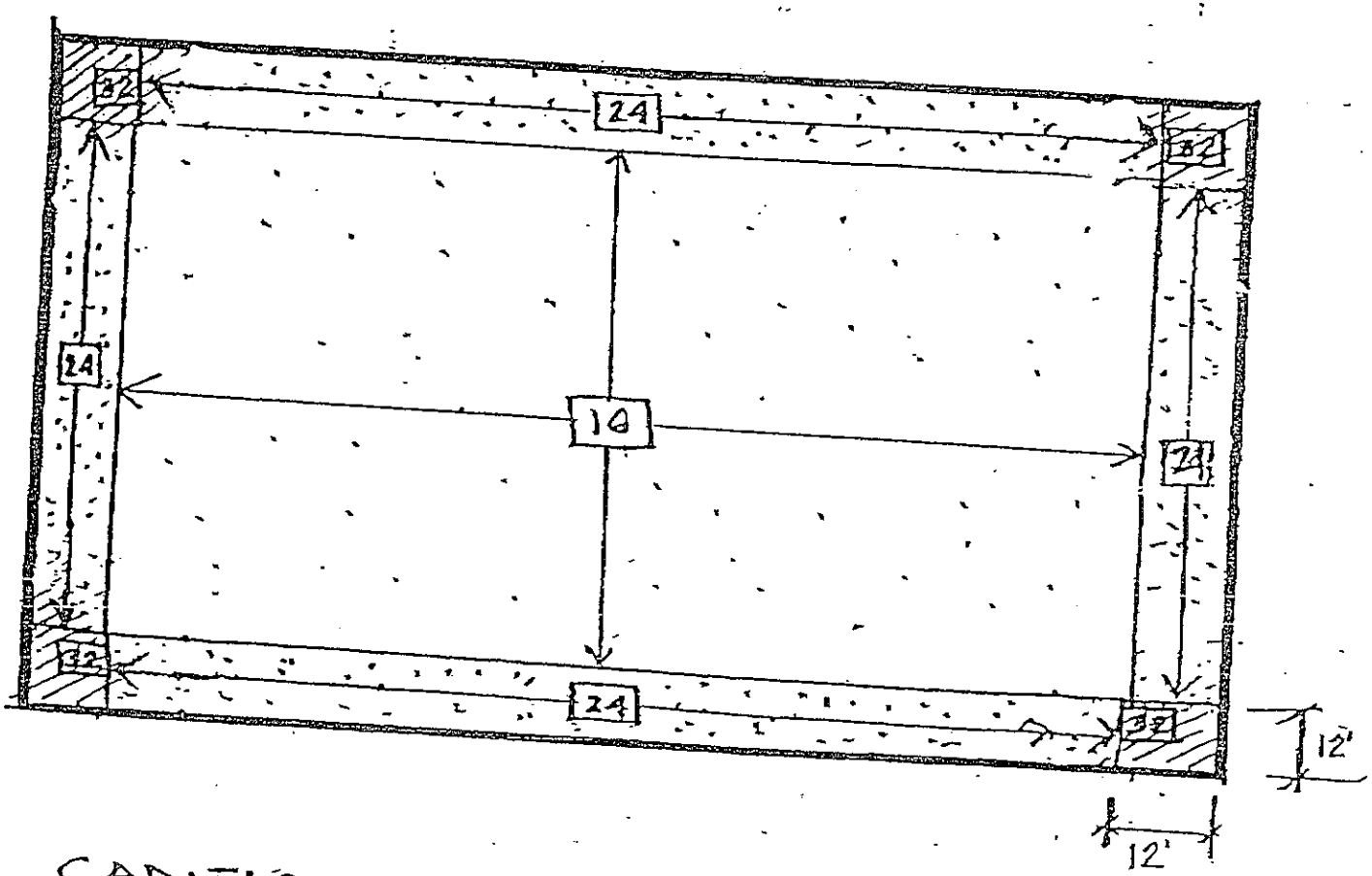

CANTIDAD DE ANCLAJES EN
RELACIÓN AL ÁREA DEL TECHO
(POR PLANCHA DE AISLACIÓN 4'x8')

AISLACIÓN ISOCIANURATO DE 2" ESPESOR

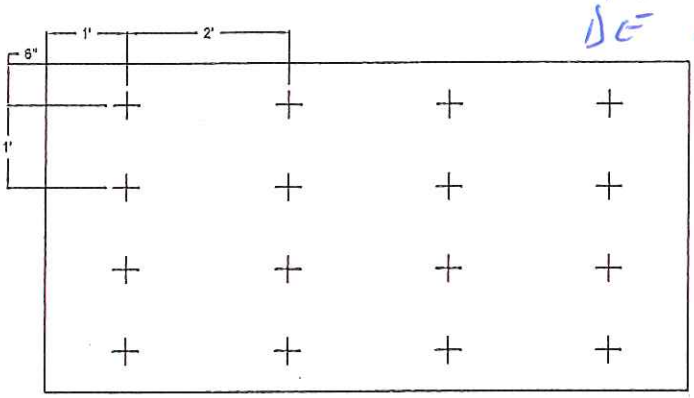

16 ANCLAJES / PLANCHA

PLANTILLA PARA CENTRO: 4' X 8'

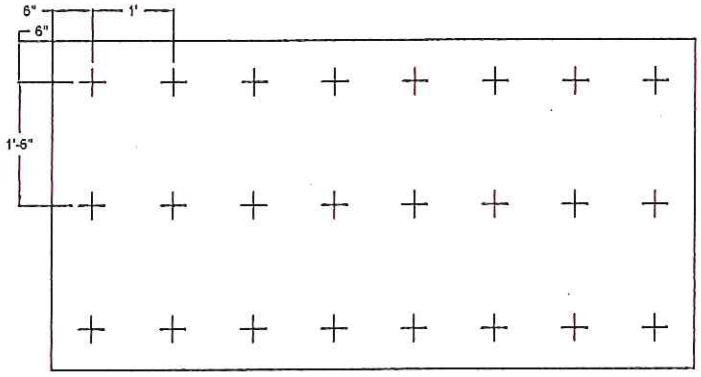

24 ANCLAJES / PLANCHA

PLANTILLA PARA PERIMETRO: 4' X 8'

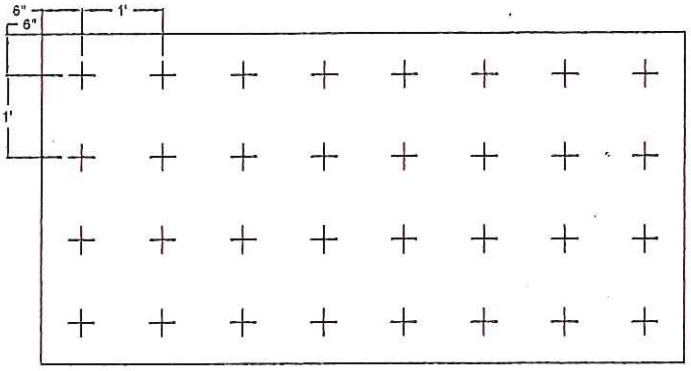

32 ANCLAJES / PLANCHA

PLANTILLA PARA ESQUINAS: 4' X 8'

ANCLAJE EN CASO DE METAL DECK

AISLACIÓN ISOCIANURATO DE 1 1/2" ESPESOR

PLANCHA DE AISLACION SEGUN ESPECIFICADA

TIRA DE POLIURETANO ADHESIVO DE 3/4" Ø MIN. (TIPICO)

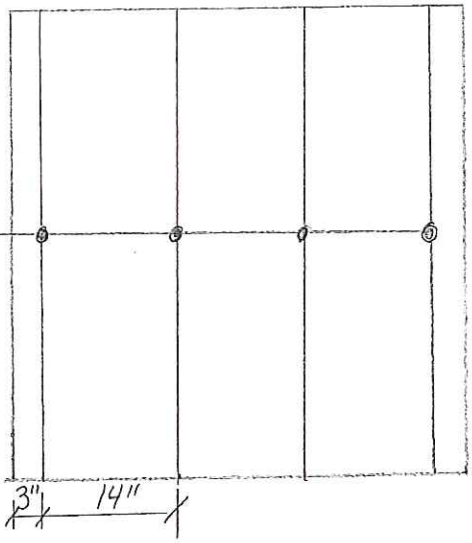

CENTRO

APLICACION DE 16 pies LINEALES DE POLIURETANO ADHESIVO POR PLANCHA 4'X 4'

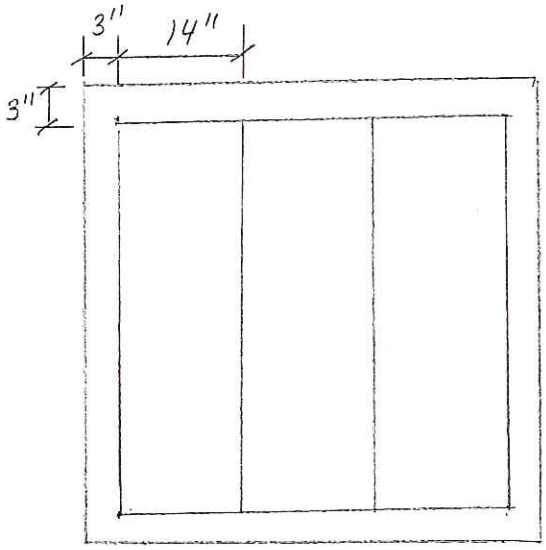

PERIMETRO

APLICACION DE 21 pies LINEALES DE POLIURETANO ADHESIVO POR PLANCHA 4'X4'

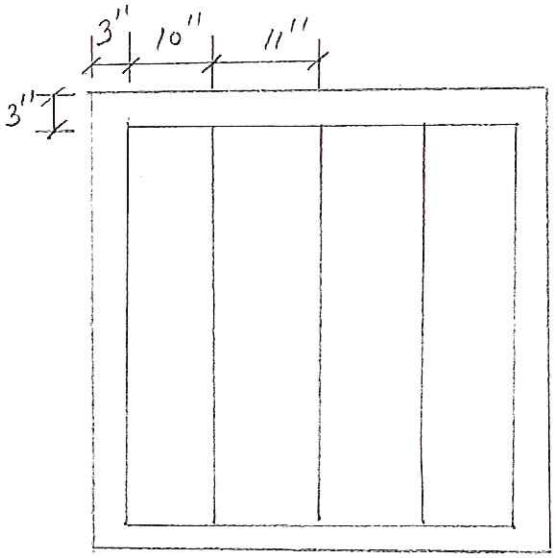

ESQUINA

APLICACION DE 24.5 pies LINEALES DE POLIURETANO ADHESIVO POR PLANCHA 4'X4'

ANCLAJE EN CASO DE Hormigón

DETALLE POLIURETANO ADHESIVO

NTS

FLASHING DETAIL

NOT TO SCALE

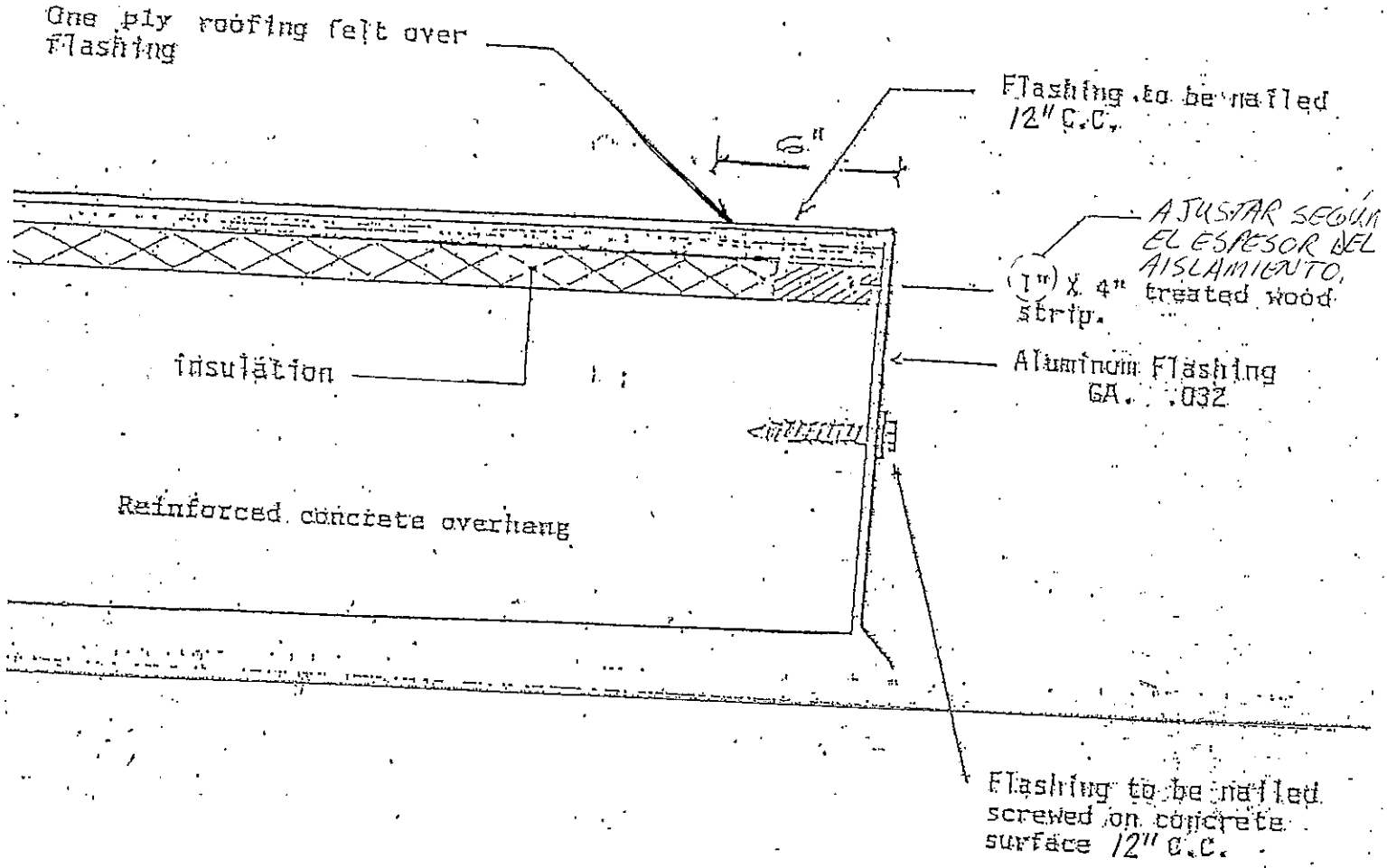

NOTE:

Flashing to be nailed if wooden is embeded in overhang, if not, flashing must be screwed using 3/16" X 1 1/4" tapcon anchors. (Hex. head)

In each case separation of nails or screws shall be 12" C.C.

INSTALACIÓN DE METAL DECK TYPE "B" page 22

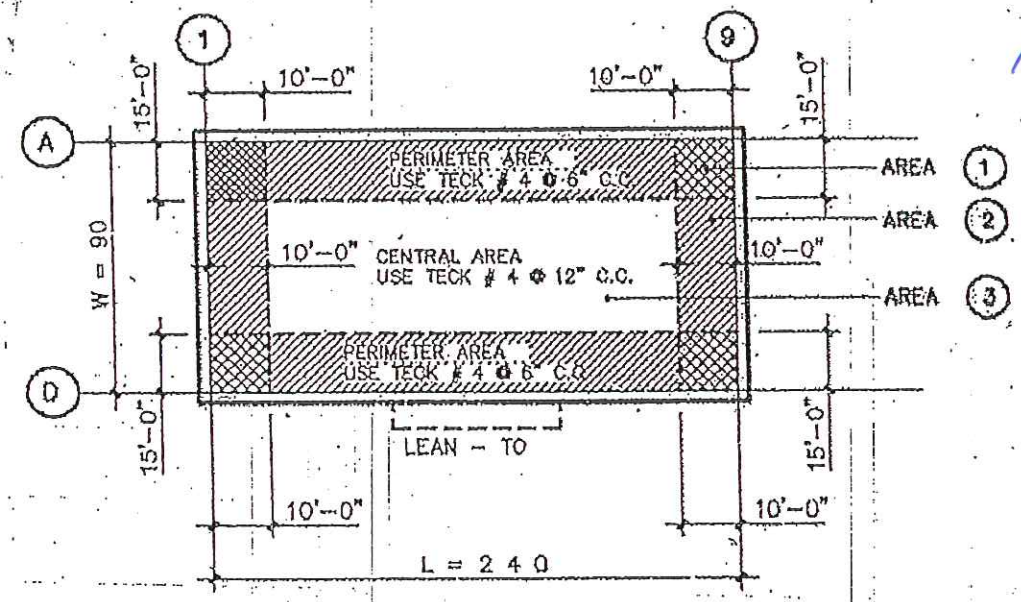

ROOF PLAN

TYPICAL FASTENER LAYOUT

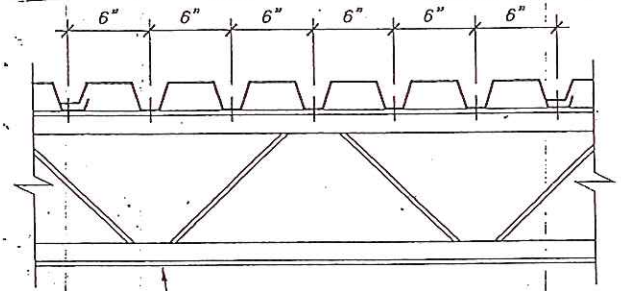

PERIMETER AND CORNER AREA USE TEKS FASTENERS @ 6" C.C. (MAX.)

(SEE ROOF PLAN)

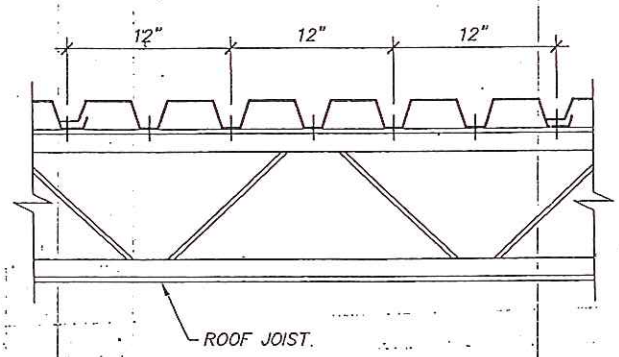

CENTRAL AREA USE TEKS FASTENERS @ 12" C.C. (MAX.)

(SEE ROOF PLAN)

TYPICAL FASTENING PATTERN

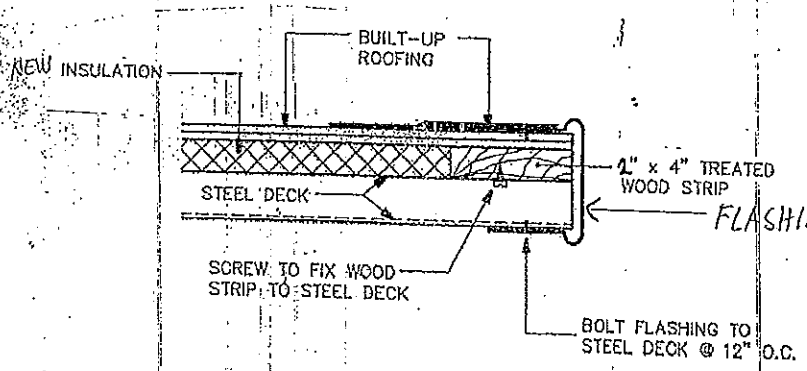
BUILT-UP ROOFING
NEW INSULATION
2" x 4" TREATED WOOD STRIP
STEEL DECK
FLASHING NUEVO
SCREW TO FIX WOOD STRIP TO STEEL DECK
BOLT FLASHING TO STEEL DECK @ 12" O.C.

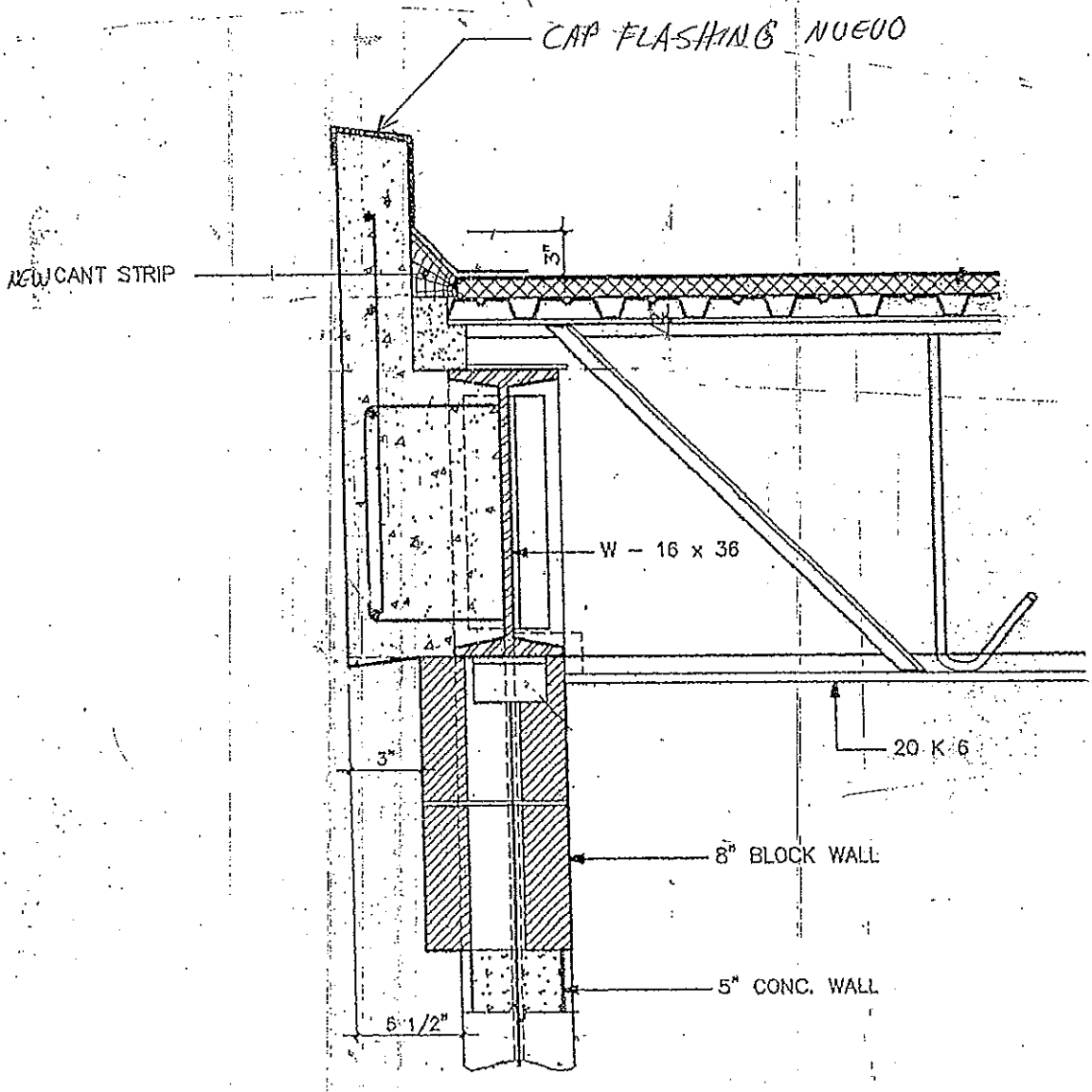
CAP FLASHING NUEVO
NEW CANT STRIP
3"
W - 16 x 36
20 K 6
3"
8" BLOCK WALL
5" CONC. WALL
5 1/2"

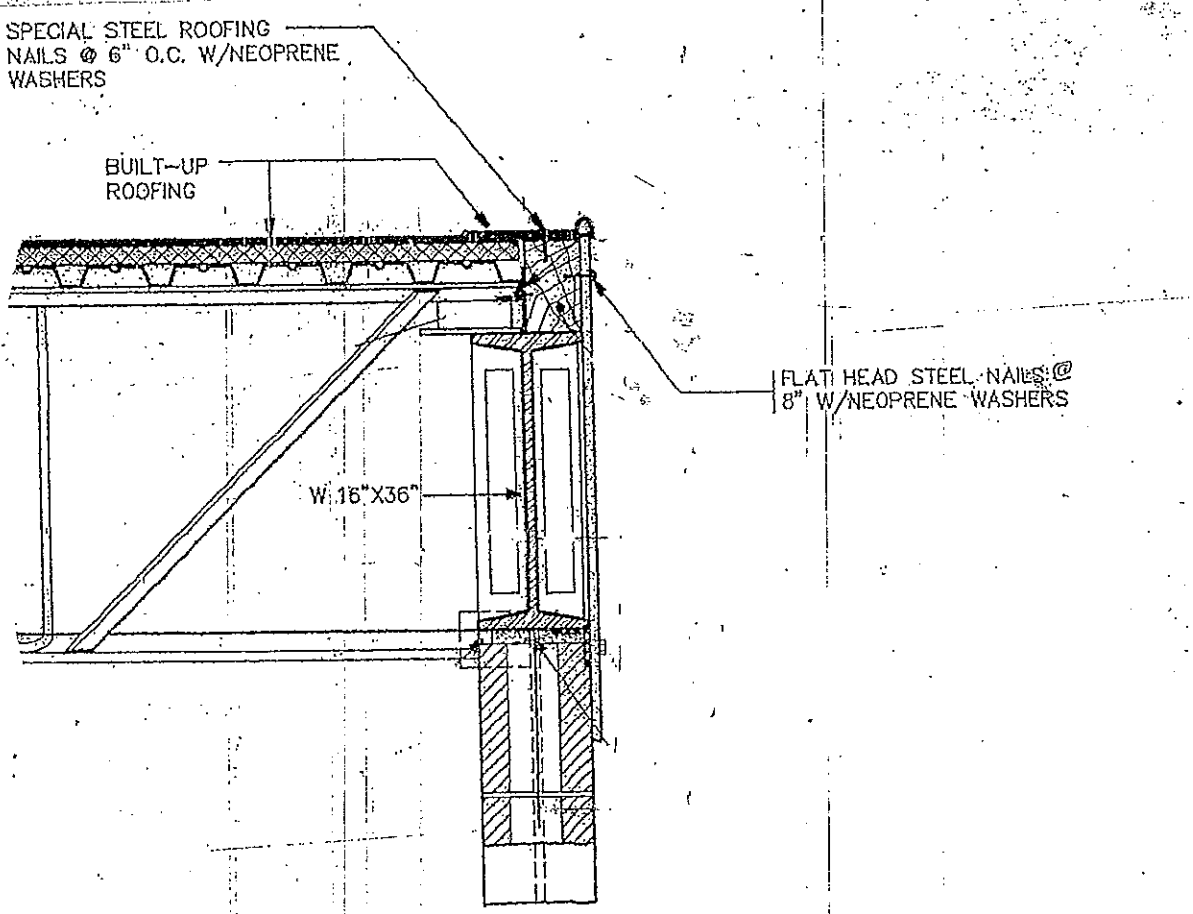
SPECIAL STEEL ROOFING NAILS @ 6" O.C. W/NEOPRENE WASHERS
BUILT-UP ROOFING
FLAT HEAD STEEL NAILS @ 8" W/NEOPRENE WASHERS
W 16"X36"

SECTION 08100
METAL DOORS AND FRAMES

For listing of subsections, see subsection index at end of section.

PART 1 - GENERAL

1.01 DESCRIPTION:

A. Furnish and install all doors, frames, vision panels, and accessories as indicated and specified.

1.02 RELATED WORK:

A. Section 04200: Unit Masonry and Accessories

B. Section 05500: Miscellaneous Metal

C. Section 08710: Finishing Hardware

D. Section 08810: Glass and Glazing

E. Section 09940: Shop Painting

F. Section 09941: Field Painting

G. Section 10162: Metal Toilet Partitions

1.03 QUALITY ASSURANCE:

A. Testing Agency Qualifications. Testing agency fire-rating certification with approval of authority having jurisdiction and re-examination service.

B. Requirements of Regulatory Agencies: Provide openings having indicated fire-resistive rating of 3/4-hour or longer with doors and frames bearing testing agency-issued label for required fire rating.

1.04 REFERENCES:

A. Aluminum Association Standard Anodic finish (AASA)

B. Underwriters' Laboratories, Inc.

C. American Society for Testing and Materials:

1. ASTM A525-80a, Standard Specification for General Requirements for Steel Sheet, Zinc Coated (Galvanized) by the Hot-Dip Process.

2. ASTM A526-80, Standard Specification for Steel Sheet, Zinc-Coated (Galvanized) by the Hot-Dip Process, Commercial Quality.

3. ASTM E90-75, Standard Method for Laboratory Measurement of Airborne Sound

Transmission Loss of Building Partitions.

D. Federal Specifications (FF)

1.05 SUBMITTALS:

A. Shop Drawings: Submit shop drawings of doors and frames indicating dimensions, gages of metals, types of finishes, and alloy of aluminum for acceptance. Include certification that preparation for hardware is in accordance with templates furnished by hardware manufacturer.

B. Manufacturer's installation instructions for all types of doors and frames.

C. Certified performance results for sound-retarding doors and frames tested in accordance with ASTM E 90.

D. Certificates, as required for doors and frames, of testing agency fire-rating.

1.06 PRODUCT DELIVERY, STORAGE AND HANDLING:

A. Before delivery, identify type and size of each door with markings that will not damage finish.

B. Preassemble frames and door mullions in shop and deliver to project site with spreader bar at sill, or tie in pairs to form box.

PART 2 - PRODUCTS

2.01 MATERIALS:

A. Hollow Doors:

1. Galvanized Sheet Steel: ASTM A526; ASTM A525, G60 Coating.

2. Internal Stiffeners: Conform with manufacturer's requirements for sheet steel.

3. Sound-Deadening and Thermal Insulation: Chemically-inert, non-combustible, moisture-resistant material in accordance with accepted manufacturer's recommendations; labeled door insulation conform to requirements of labeling authority.

B. Glass (Clear and Clear-Wire) and Glazing Materials: Section 08810

C. Clips, Bolts, Screws and Rivets: Stainless steel, sized as recommended by manufacturer.

D. Primer: Rust-inhibitive metal primer capable of being baked and compatible with finish painting systems specified in Section 09941.

E. Bituminous Paint: Mineral colloid-stabilized coal tar emulsion; black color; minimum solids by volume 40-percent; dry-film thickness of 12.0 mils.

F. Touch-Up Paint: As recommended by manufacturer.

G. Hardware: Section 08710

2.02 PREPARATION:

A. Verify details; obtain copy of accepted hardware schedule templates and other information.

B. Verify size, design and fire-resistive rating of each opening.

C. Coordinate details of construction with other work supporting or adjoining frames and doors.

2.03 FLUSH ALUMINUM DOORS:

A. Manufacturer: Type G, manufactured by The Alumiline Corp., Pawtucket, RI; "Deluxe" manufactured by Tubelite, Architectural Div. of Consolidated Aluminum, Reed City, MI; D9 Series manufactured by United States Metals Manufacturing Corp., South Bend, IN; or acceptable equivalent.

B. General:

1. Fabricate aluminum components from metal of acceptable alloys best suited to requirements of use, generally: Anoclad Type II for extrusions and sheets. 214F for anodized castings.

2. Thickness: 0.125 in. unless otherwise indicated or specified.

3. Mortise and reinforce doors for hinges with aluminum alloy 2024-T4 plates or extruded shapes at least 1/4-in. thick.

4. Furnish reinforcement within door for other finishing hardware similar to that furnished for hinges.

5. Glazed Doors:

a. Edge openings with extruded aluminum.

b. Furnish snap-in aluminum glazing beads.

c. Furnish gray virgin vinyl glazing inserts, durometer hardness 70-74 (Shore A).

6. Furnish overlapping type astragal for all pairs of exterior doors.

a. Astragal: extruded aluminum tee.

b. Fasten astragal to active leaf on outswinging doors.

c. Furnish the overlapping flange of the astragal with an extruded vinyl gasket set into a vertical groove to provide weatherstripping for the doors.

7. Provide cast aluminum thresholds of the type, size, and location indicated in the Door Schedule.

8. Provide cut-out in doors for monorail as indicated. Provide neoprene skirt around cut-out with metal trim and fastenings.

C. Doors shall be one of the following:

1. Welded tubular core type:

a. Substructure: Weld 1-1/2-in. square extruded aluminum tubing to form substructure.

b. Face sheets: Bond 0.062 in. thick pattern 10 fluted aluminum face sheets to substructure.

c. Stiles: Applied extruded aluminum.

d. Apply cushion strips between face sheets and substructure.

e. Fill interior recesses of the door with fiber glass padding or approved equal sound deadening material.

2. Honeycomb core type:

a. Core: resin impregnated fiber honeycomb.

b. Subframe: extruded aluminum tubular sections extending around the perimeter to receive the hardware and interlock edges of face sheets.

c. Face sheets: 0.062-in. thick pattern 10 fluted aluminum sheets bonded to 1/8-in. tempered hardboard.

d. Face sheets bonded to core and subframe.

e. Extruded aluminum edge sections applied to the stiles.

3. Mechanically connected tubular core type:

a. Internal grid system: tubular aluminum sections.

b. Door rim: extruded aluminum rails.

c. Face sheets: 0.062-in. thick pattern 10 fluted aluminum sheets.

d. Assemble door rims and grid sections with rivets and screws.

e. Reinforce tops and bottoms of the doors with three stacked channels.

f. Fill voids between grid sections, with compressed, high density, noncombustible and water proof volcanic mineral insulation.

2.04 NARROW STILE ALUMINUM DOORS:

A. Manufacturer: Tubular aluminum doors manufactured by The Alumiline Corp., Pawtucket, RI; Tubelite, Architectural Div. of Consolidated Aluminum, Reed City, MI; United States Metals. Manufacturing Corp., South Bend, IN; or acceptable equivalent.

B. Provisions:

1. Materials:

a. Aluminum components fabricated from metal of approved alloy or alloys best suited to requirements of use, generally: Anoclad II for extrusions and sheets. 214F for anodized castings.

b. Thickness: 0.125 in. unless otherwise indicated or specified.

2. Stiles and Rails:

a. 1-3/4-in. thick by 2-1/8-in. for stiles, 2-1/4-in. for top rail, and 4-in. for bottom rail and reinforced and joined by means of machined aluminum corner reinforcements, concealed welded to extruded sections. Use minimum of six welds at each corner. Glass held in place with snap-in aluminum glazing beads and extruded vinyl glazing inserts as specified for flush aluminum doors.

b. Install wool pile weathering in meeting rails of door pairs.

3. Provide cast aluminum thresholds of the type, size, and location indicated in the Door Schedule.

2.05 ALUMINUM FRAMES:

A. Manufacturer: The Alumiline Corp., Tubelite, United States Metals Manufacturing Corp., or acceptable equivalent products. The head and jamb frame members shall be provided with Alumiline's No. 83R, Tubelite's No. E-0125, or United States' No. 5466 doorstops with integral weatherstripping, or acceptable equivalent.

B. Provisions:

1. Construct frames of types and sizes indicated.

2. Material: extruded aluminum rectangular tubular sections with sharp corners and wall thickness of not less than 0.125 in.

3. Mortise and reinforce frames for strike plates and hinges: 1-3/4-in. stainless steel hinge reinforcements not less than 1/4-in. thick, and full height of door long. Insert bar within frame and fasten above and below each hinge mortise.

C. Transoms-Sidelights:

1. Construct extruded aluminum tubular sections of identical type and size as door frame to which joined.

2. Glass in transoms-sidelights held in place by 2-piece extruded aluminum glazing bead at least 3/4 in. deep with concealed fasteners on fixed part of bead, a snap-in bead, and extruded vinyl glazing inserts in integral slots.

2.06 FABRICATION OF ALUMINUM DOORS AND FRAMES:

A. Free from dents or tools marks, warpage, buckle, and open joint. Lines straight or true to

profile. Miters formed in true alignment and similar butting profiles accurately intersected. Sinkage or mortises for hardware reinforced and accurately formed to templates. Door edges including top and bottom, properly sealed. Joints in frames securely reinforced, weathered, and joined by means of concealed fastenings.

2.07 HOLLOW-METAL DOORS:

A. Construct 1-3/4-in. thick full flush type hollow metal doors.

1. Face sheets: not less than 16-gage cold rolled, leveled sheet steel, free of seams or joints.

2. Core Construction:

a. Interlocking vertical channels or Z-members of not lighter than 22-gage steel, spaced not more than 6-in. apart and spot welded to face sheets not less than 6-in. on centers.

b. Ladder or grid pattern of not less than four vertical and not less than eight horizontal 18-gage cold rolled channels double welded at all junction points.

3. Sound-deadening material standard with the manufacturer to eliminate metallic sound incident to normal operation of door.

4. Face sheets spot welded to the core.

5. Weld tops and bottoms of the doors flush or closed with a recessed channel.

6. Mortise and reinforce doors for hinges with not less than 7-gage steel.

7. Reinforce doors for surface applied hardware and lock faces with 12-gage steel.

8. Drill and tap doors for locks and hinges at the factory.

9. Drill and tap for surface applied hardware in the field.

10. Glazed doors: Furnish snap-in glazing strips not requiring screws.

11. Secure stationary, sightproof, 20-gage cold-rolled sheet steel louvers into openings in doors by metal moldings screwed on both sides of door.

12. Furnish doors bearing Underwriter's Laboratory, Inc., "A" label for a 3-hour rating where doors are indicated to be B label.

13. Furnish overlapping type astragal on key side of all pairs of doors.

14. Furnish extruded aluminum overlapping type astragal with integral weathering gasket on key side of all pairs of exterior doors.

2.08 PRESSED-METAL FRAMES:

A. Furnish pressed-metal frames for hollow metal doors by same manufacturer as doors.

B. Fabricate frames of not less than 16-gage cold rolled steel with integral stops and rabbets.

C. Assemble heads and jambs with accurately fitted, fully welded, smoothly ground lock-miter joints.

D. Weld angle spreaders to bottom of jambs to assure safe shipment and perfect alignment in field.

E. Anchors for frames:

1. Furnish three corrugated adjustable loose T-anchors on each jamb of frames under 8 ft. and additional anchors for frames 8 ft. and higher.

2. Furnish floor anchor clips, on each jamb, with holes for securing to concrete floor slab.

F. Mortise frames for strike plates and hinges.

G. Weld steel reinforcing plates to frames for hinges; drill and tap plates to accommodate mortise type template hinges; and weld galvanized dust covers over reinforcing plates to prevent clogging of tapped holes by mortar.

H. Where frames are indicated to be C, B and A label, furnish frames bearing Underwriter's Laboratories, Inc. B label for 1-1/2-hour rating, with three Underwriters Laboratories, Inc., labeled, adjustable loop anchors per jamb.

2.09 SOUND-RETARDING DOORS AND FRAMES:

A. Manufacturer: Sonicbar Division of Rysdon Products Company, Chicago, Ill.; Overly Manufacturing Co., Greensburg, Pa., Pioneer Industries, Carlstadt, N.J.; or acceptable equivalent.

B. Provisions:

1. Furnish doors and frames of the sizes indicated, having the appearance of conventional hollow metal doors and frames, 1-3/4-in. flush design with STC rating of 48.

2. Doors:

a. Construct doors from 16-gage cold-rolled, stretcher-leveled sheet steel, free of visible joints at seams or door faces.

b. Weld interior formed stiffening reinforcement in shop for full height of doors.

c. Connect face sheets at edges only.

d. Interlace spaces between reinforcement with fireproof, noncoupling filler.

e. Furnish, glaze indicated doors, with resilient self-sealing and locking, mechanically unconnected glazing frames for glazing 1/4-in. double lights of glass.

3. Door Frames:

   a. Fabricate door frames of 14-gage cold-rolled steel.

   b. Fit head and jamb intersections to a hairline joint, reinforced, welded and ground smooth.

   c. Mortise, reinforce, and fit doors and frames in the factory for heavy-duty lockset, strike and template hinges.

4. Clearance: not to exceed 1/8 in. between frames and doors.

5. Seal side and head jambs with adjustable sound stops attached to the frame consisting of:

   a. Furnish closed cell neoprene gaskets in anodized aluminum housings with snap-on decorative covers attached to frames.

   b. Furnish gasket adjustment by concealed locking screws 8 in. on centers capable of a 3/8-in. adjustment.

6. Maximum sill operating clearance: 1/4 in.

7. Furnish sill seal by a mortised, automatic, instantaneously 1/4-in. retracting neoprene gasket door bottom.

8. Furnish meeting stiles of pairs of sound-retarding doors with overlapping, neoprene gasketed astragals enclosed in an aluminum housing.

2.10 VISION PANEL FRAMES:

A. Manufacturer: Alumiline Corp., Pawtucket, RI; Tubelite, Reed City, MI; United States Metals Manufacturing Corporation, South Bend, IN; or acceptable equivalent.

B. Provisions:

   1. Frames: Constructed of extruded aluminum tubular sections of type and size indicated.

      a. 3/4-in deep screwed-on aluminum channel glazing beads for use with elastic glazing compounds to hold glass in place.

      b. Assemble head, jambs, and sill with lock-miter joint.

      c. Accurately fit, fully weld, and ground smooth all miters.

      d. Provide frames with three adjustable masonry anchors.

      e. Constructed with pressed-metal frames formed from not less than 16-gage cold-rolled steel with integral stops and rabbets as indicated on drawings.

      f. Glass held in place by screwed-on glazing beads of size and shape indicated.

2.11 INSULATED ALUMINUM PANELS:

A. Insulated metal panels shall be laminated sandwich panels consisting of 0.032-inch thick aluminum face sheets with both sides bonded to 1/8-inch thick tempered hardboard and a 1-1/2-inch thick incombustible perlite core. The total thickness of the panel shall be 1-3/4-inch. Panels shall be set into framing with screwed-on glazing beads.

2.12 SCREEN DOORS:

A. Manufacturer:

1. Exterior doors design No. 19: Kane Manufacturing Corp., Kane, PA; Model D31s manufactured by United States Metals Manufacturing Corp., South Bend, IN; Design No. 19 manufactured by Alumiline Corp., Pawtucket, RI; or acceptable equivalent.

B. Provisions:

1. FF-H-00111B(GSA-FSS), Hardware, Builders', Shelf and Miscellaneous; FF-H-116E, Hinges, Hardware, Builders'; and FF-H-121C, Hardware, Builders', Door-Closing Devices, provided for each screen door:

a. 1-1/2 pr. butts, T2102, 3-1/2 in. by 3-1/2 in., US26D

b. 1 screen door catch, Type 1088, US26D

c. 1 liquid door closer, Type 3010, SBL

2. Provide, welded type, heavyweight, aluminum, exterior screen doors having:

a. Extruded aluminum alloy 6063-T5 with 1/8-in. wall thickness.

b. 18 by 14 mesh screen with 0.0126-in. alelad aluminum wire retained in door by virgin vinyl plastic splines on all sides.

2.13 WEATHERSTRIPPING:

A. Sill Protection:

1. No. 39-A manufactured by Zero Weather Stripping Co., Inc., Bronx, NY; No. 770L door bottom manufactured by Accurate Metal Weather Strip Co., Inc., Mt. Vernon, NY; 315 AN door bottom protection manufactured by Pemko Manufacturing Company, Emeryville, CA; or acceptable equivalent.

2. Provisions: Shop apply 1/8-in. thick neoprene sweep in an extruded aluminum housing, anodized to match doors and frames, to the bottom of the door.

B. Head and Jamb Protection:

1. No. 139 manufactured by Zero Weather Stripping Co; No. 770LN manufactured by Accurate Metal Weather Strip Co., Inc.; No. 315AR manufactured by Pemko Manufacturing Co., or acceptable equivalent.

2. Provisions:

a. Weatherstrip, head and jambs of hollow metal doors.

b. Apply 3/16-in. thick closed cell sponge neoprene in extruded aluminum housing to door frame stops to make contact with door when closed. Construct aluminum housing similar in shape to sill protection housing.

2.14 ALUMINUM ROLL-UP DOORS:

A. Furnish roll-up doors, face mounted, aluminum doors of sizes indicated.

1. Curtains: Form of interlocking flat slats from sheet aluminum, not less than 0.040 in. thick or from extruded aluminum, not less than 0.062 in. thick.

a. Slats: Strength to withstand wind load of 20 lb. per square foot, end locks on each end of alternate slats; wind locks on at least every fourth slat.

b. Bottom Rail: Two aluminum angles with a combination compressible weatherseal and electric contact type safety strip applied to bottom.

2. Curtain Guides: Not less than 3/16-in. thick aluminum angles of sufficient depth to retain curtain under heavy wind pressure.

3. Curtain Hood: Sheet aluminum, not less than 0.040. in. thick; fit to brackets; reinforce with stiffener flanges at top and bottom edges. Provide with neoprene air baffle for full length of curtain.

2.15 GALVANIZED-STEEL ROLL-UP DOOR:

A. Furnish roll-up door, face mounted, galvanized steel of the size indicated.

1. Curtains: Form of interlocking flat slats from not less than 20-gage steel sheets, hot-dip galvanized.

a. Slats: strength to withstand 20 lb. per square foot wind load; end locks on each end of alternate slats; wind locks on at least every fourth slat.

b. Bottom rails: two steel angles with combination compressible weatherseal and electric contact type safety strip applied to bottom.

c. Coil curtain on a pipe, sized to carry door load with a defection not to exceed 0.03 in. per foot of width; and balance curtain by helical springs inside pipe.

d. Anchor springs to the same tension rod: hold springs in position by a common, easily accessible adjusting wheel.

2. Curtain Guides: Structural steel angles of sufficient depth to retain curtain under heavy wind pressure. Weather seal outside leg of guide with continuous neoprene or silicone-treated wool pile seal to contact exterior surface of slats.

3. Curtain Hood: Galvanized sheet steel not less than 24-gage; fitted to brackets; reinforced at top and bottom edges with stiffener flanges; provided with neoprene air baffle for full width of curtain.

4. Brackets: Steel plates attached to curtain guides.

C. Mount fully enclosed electric motor operators to permit their removal without interfering with the use of the auxiliary hand chain operators.

1. Electric Motor: Operates on 480-volt, 3-phase, 60-Hertz current; gear type with high starting torque; centrifugal-clutch; solenoid operated brake; automatic limit switches to limit both up and down travel; magnetic starter with thermal overload protection in each phase; reset buttons; control station for opening, closing and stopping the door.

2. Electrical enclosures: NEMA Type 12 for magnetic starter and control station.

3. Electrical conduit, switches, wiring and connections specified under electrical sections.

D. Emergency operation: Hand chain to be engaged or disengaged from the floor.

2.16 OVERHEAD DOORS:

A. Manufacturer: Overhead Door Corp., Dallas, TX; Barcol Overdoor Company, Inc., Sheffield, IL; Raynor Mfg. Co., Dixon, IL; or acceptable equivalent.

B. Provisions:

1. Flush steel, sectional upward-acting doors.

a. 2-in. thick section panels with flush outside face.

b. 16-gage steel galvanized with not less than 1.75 oz. of zinc per square foot and chemically treated for paint adherence.

c. Rebated type, weather type meeting rails acting as interlocking struts for full length of section.

d. Neoprene weatherstripping at bottom of doors.

e. Adjustable seal strip at top section.

2. Counterbalance doors with torsion springs, tapered drums, and galvanized lift cables.

a. Tracks: mounted by angles in vertical position and horizontal position.

b. Full-floating hardened steel ball bearing rollers

c. Five-pin tumbler lock with locking bar.

3. Mount fully enclosed electric motor with magnetic brake and heavy-duty chain drive controls and safety switch.

a. Electric Motor: center mounted; dentil clutch to permit disengaging of operator and engaging of hand chain for manual operation: built-in inherent overload protection, controlled by magnetic reversing starter.

b. Controls: provided with 480/120-volt control transformer; operate on 120-volt current; consist of weatherproof three-button control stations at each door for

opening, closing, and stopping door.

c. Bar type reversing safety switch at bottom of each door.

2.17 HARDWARE PREPARATION:

A. Provide frames and doors with cut-outs and reinforcement for mortise hardware and reinforcement for surface mounted hardware in accordance with templates supplied by hardware manufacturers. Additionally, drill and tap as required for hardware.

B. Make total thickness of reinforced conditions equal to nominal diameter of fasteners required by hardware items.

C. Provide plaster guards or mortar boxes in back of hardware cut-outs in and welded to frames.

D. Provide frames and doors having fire-resistive ratings with hardware preparation conforming to requirements of labeling authority.

E. Welding hinges to door frames not permitted.

F. Drill door frames for installation of mutes. Provide minimum of three mutes in jamb stops of single-leaf doors and two in head stop of double-leaf openings. Do not drill frame stops of soundproof openings.

2.18 FINISHES:

A. Aluminum Work:

1. Doors: Dark bronze anodic finish, Aluminum Association Standard C22A42.

2. Door Frames: Dark bronze anodic finish, Aluminum Association Standard M21C22A42.

3. Vision Panel Frames: Dark bronze anodic finish, Aluminum Association Standard M21C22A42.

4. Roll-up Door:

a. Exposed Aluminum Parts: apply C22A31 finish, followed by one shop coat of methacrylate lacquer.

b. Other Exposed Parts: apply one coat of aluminum paint before shipment.

5. Weatherstripping Housing for:

a. Aluminum Doors and Frames: anodize to match doors and frames.

b. Hollow Metal Doors and Frames: prepare for field painting.

B. Steel Work:

1. Hollow Metal Doors: Chemically wash, rinse, and dry followed by one shop coat of metallic primer.

2. Door Frames: Phosphate treat and shop coat with baked-on metallic primer.

3. Sound Retarding Doors: Treat the same as hollow metal doors.

4. Vision Panel Frames: Phosphate treatment one shop coat of baked-on metallic primer.

5. Roll-Up Door:

   a. Phosphate treat and galvanize curtain slats and hoods with 1.25 oz. of zinc per square foot of surface area.

   b. To other ferrous surfaces except working parts of the door, shop apply one coat of:

      (1) 1) Inertol Rust-inhibitive Primer 621, by Koppers Co., Inc. Pittsburgh, Pennsylvania

      (2) 2) 77 Chem-Prime (Series 37) by Tnemec Co., Inc., North Kansas City, Missouri

      (3) 3) Chromox 13R50 Primer by Mobil Chemical Co., Edison, New Jersey

   c. Field Painting is specified under Section 09941.

PART 3 - EXECUTION

3.01 INSPECTION:

A. Examine accepted hardware schedules and verify proper coordination of hardware, doors and frames.

B. Examine opening locations and verify following:

   1. Correctness of dimensions, backing or support conditions.

   2. Absence of defects that would adversely affect frame or door installation.

C. Do not start work until unsatisfactory conditions are corrected.

3.02 PREPARATION:

A. Protect aluminum components of aluminum doors, frames and vision panels in contact with plaster, concrete, or masonry, or connected to dissimilar metals as specified under Section 05500 and GENERAL SPECIFICATIONS.

3.03 INSTALLATION:

A. Install and adjust doors, frames, and vision panels, and appurtenances in accordance with the manufacturer's recommendations.

B. Set all frames and anchor in position, plumb, square, level and in alignment.

C. Brace frames until the anchors are set.

D. Fill the backs of pressed metal frames with mortar as specified in Section 04200. List Section 04200 under 1.02 RELATED WORK.

E. Hang doors in frames with proper clearances.

F. Make final adjustments for proper and easy operation of doors after hardware installation and glazing.

3.04 ADJUSTING:

A. Prime Coat Touch-Up: Immediately after installation, sand smooth and touch-up rust areas and other areas where prime has been damaged, with prime touch-up paint.

B. Make adjustments as required for correct function and smooth operation.

C. Protect frames and doors from damage to surface or profile.

3.05 PROTECTION:

A. After erection, protect doors, frames, and vision panels from damage due to installation of other work or from lime, acid, cement, or other harmful compounds.

PART 4 - SUBSECTION INDEX

A. GENERAL

1.01 Description
1.02 Related Work
1.03 Quality Assurance
1.04 References
1.05 Submittals
1.06 Product Delivery, Storage and Handling

B. PRODUCTS

2.01 Materials
2.02 Preparation
2.03 Flush Aluminum Doors
2.04 Narrow Stile Aluminum Doors
2.05 Aluminum Frames
2.06 Fabrication of Aluminum Doors and Frames
2.07 Hollow-Metal Doors
2.08 Pressed-Metal Frames
2.09 Sound-Retarding Doors and Frames
2.10 Vision Panel Frames
2.11 Insulated Aluminum Panels
2.12 Screen Doors
2.13 Weatherstripping
2.14 Aluminum Roll-Up Door
2.15 Galvanized-Steel Roll-Up Door

2.16 Overhead Doors
2.17 Hardware Preparation
2.18 Finishes

C. EXECUTION

3.01 Inspection
3.02 Preparation
3.03 Installation
3.04 Adjusting
3.05 Protection

* * *

Section 08331
Rolling Doors

PART 1 - GENERAL

1.1 Summary

a. Provide rolling doors where shown on the Drawings, as specified herein, and as needed for a complete and proper installation.

b. Related work:
1. Documents affecting work of this Section include, but are not necessarily limited to, General Conditions and Special Conditions.

1.2 Submittals

a. Product data: Within 30 calendar days after the Contractor has receive the Owner's Notice to Proceed, submit:
1. Materials list of items proposed to be provided under this Section;
2. Manufacturer's specifications and other data needed to prove compliance with the specified requirements;
3. Shop Drawings in sufficient detail to show fabrication, installation, anchorage, and interface of the work of this Section with the work of adjacent trades;
4. Manufacturer's recommended installation procedures which, when approved by the Engineer, will become the basis for accepting of rejecting actual installation procedures used on the work.

1.3 Quality Assurance

a. Use adequate numbers of skilled workmen who are thoroughly trained and experienced in the necessary crafts and who are completely familiar with the specified requirements and the methods needed for proper performance of the work of this Section.

PART 2 - PRODUCTS

A. Provide standard roll up service doors of the dimensions and arrangements shown on the Drawings, and with the following attributes:

1. Design wind load: 47 psf net (stress reduction is not permitted) including wind lock devices for longitudinal support, max deflection for wind load of L/120.

2. Curtain: interlocking slats fabricated from 20 gate strip steel with a hot-dip galvanize coating of 1.25 oz per sq ft in accordance with ASTM A123-84; and with bottom slat reinforced with two steels angles not less than 1/8" thick. Wind locks shall be included.
3. Guides: manufacturer's standard steel angle guide at jambs.
4. Brackets: fabricate form steel plate not less than 3/16" thick.
5. Gears: manufacturer's standard gears designed for a maximum manual effort of not more than 35 lbs.
6. Barrel: manufacturer's standard barrel designed to limit maximum deflection to 0.03" per ft, capable of counterbalancing weight of curtain, and adjustable by means of exterior wheel.
7. Hood: fabricate from galvanized steel to fit curvature of the brackets.
8. Finish:
   a. Curtain and hood: manufacturer's standard baked acrylic primer;
   b. Other exposed surfaces: one coat of rust inhibitive paint.

B. Provide manufacturer's standard chain operator.

1. Acceptable products:

   a. Atlas Door
   b. Cookson Co.
   c. Cornell Iron Works
   d. "Overhead Door Group"
   e. Raynor Garage Door
   f. Wayne Dalton

2. Other materials

   a. Provide other materials, not specifically describe but required for a complete and proper installation, as selected by the Contractor subject to the approval of the Architect.

PART 3 - EXECUTION

1.1 Surface conditions

   a. Examine the areas and conditions under which work of this Section will be performed. Correct conditions detrimental to timely and proper completion of the work. Do not proceed until unsatisfactory conditions are corrected.

1.2 Installation

   a. Coordinate as required with other trades to assure proper and adequate provision in the work of those trades for interface with the work of this Section.

b. Install the work of this Section in strict accordance with the original design, the approved Shop Drawing's pertinent requirements of governmental agencies having jurisdiction, and the manufacturer's recommended installation procedures as approved by the Engineer, anchoring all components firmly into position for long life under hard use.

c. Upon completion of the installation, check all items through at least ten operation cycles. Make required adjustments and assure that components are in optimum operation condition.

SECTION 08520

ALUMINUM JALOUSIE WINDOWS

1. RELATED DOCUMENTS:

The general provisions of the contract, including General and Special Conditions, apply to the work specified in this section.

2. DESCRIPTION OF WORK

The extent of aluminum jalousie windows is shown on the drawings.

3. GENERAL:

Standards:

Except as otherwise indicated, the requirements for aluminum windows, and the terminology and standards of performance and fabrication workmanship are those specified and recommended in ANS A 134.1, and the applicable general recommendations published by AAMA, NAAMM and AA.

Manufacturer:

Provide window units produced by one of the following manufacturers, or equivalent products of another manufacturer of the required sizes, and performance characteristics:

Lausell Aluminum Jalousies, Inc. window - LA-28 R
Tropicair Manufacturing Corp.

Sizes and Profiles:

The required sizes for window units are shown on the drawings.

The details shown are based upon standard details by one or more manufacturers.
It is intended that similar details by other manufacturers will be acceptable, provided they comply with the size requirements, and minimum profile requirements as approved by the Engineer.

Louvers:

Louvers shall be of the jumbo type.

4. MATERIALS: Aluminum Extrusions

All window members, including head, sill, jambs, travel bar and louver blades shall be formed from aluminum coil material alloy #3003-H-16 or alloy 3105-H-16 for extrusions with a minimum tensile strength of 24,000 PSI and a minimun thickness of 0.060", within commercial tolerance.

Operators:

Operators shall be heavy duty . Housing shall be cast in a single piece with no screws. Handle shall be crank type. Sector gear shall be cold rolled, tempered steel; worm gear, bushing and solid pin, tempered Ledloy steel made on screw machine. Provide 4 borings for attachment to windows.

The operators shall be located on left or right side, as may be required by job conditions. Units 4'- 0" high and over, shall have two (2) operators per unit.

Fasteners:

Clips, bolts, and screws shall be of aluminum, stainless steel or other metallic materials guaranteed by the manufacturer to be non-corrosive and compatible with the aluminum window members, operator, anchors and other components of the window units.

Sealant:

Unless otherwise indicated, provide a sealant guaranteed to remain permanently elastic, non-shrinking and non-migrating.

5. WINDOWNS FINISH:

Windows shall be furnished with two coats of baked enamel paint, factory applied. Color shall be as selected by Engineer.

6. WINDOWS PERFORMANCE REQUIREMENTS:

General:

Except as otherwise indicated, comply with the air infiltration tests, water resistance tests and applicable load tests specified in ANS A 134.1 (sponsored by AAMA).

Testing:

Wherever manufacturer's standard window units comply with the requirements and have been tested in accordance with the specified tests, provide certification by the manufacturer of compliance wiht such tests; otherwise, perform the required tests through a recognized testing laboratory and provide certified test results.

7. AUXILIARY WINDOW UNIT COMPONENTS:

Provide mullions where shown, matching window units. Aluminum mullions for windows of more than five(5) feet in height shall be "T" shape extruded aluminum, of not less than 1/4 inch thickness. Secure windows to the mullions with aluminum screws or rivets 1/4 inch in diameter spaced not over 1'-6" center to center. Embed both ends of the mullions into the concrete of the window opening.

8. INSTALLATION:

Comply with manufacturer's specifications for the installation of window units, operators, and other components of the work.

Set units plumb, level and true to line, without warp or rack of rames or jalousies. Anchor securely in place to masonry at heads and jambs with 1/4" diameter aluminum bolts with steel expansion shields (wood plugs & wood screws will not be accepted). Bolts shall be of sufficient length to penetrate into the concrete a minimum of 1-1/2". Bolts for fastening frames to masonry shall be placed not over 1'-6" center to center. Use not less than two (2) bolts on each side.

Set and anchor firmly to concrete or masonry as detailed on the drawings or as approved.

Separate unpainted surfaces of aluminum windows from concrete or masonry by applying a heavy protective coating of an alkali resistant bituminous paint. Surfaces of aluminum which will come in contact with dissimilar metals (except stainless steel) shall also be coated with the bituminous paint or a zinc chromate priming paint.

Caulk windows at all intersections with masonry openings and as required by the detail drawings. Caulking shall be forced into the voids or corners in a continuous full bead and tooled to an even surface with straight edges. Joints shall be completely watertight.

Adjust operator to provide a tight fit at contact points, for smooth operation and weathertight closure.

Clean aluminum surfaces promptly after installation of windows, exercising care to avoid damage to the paint. Remove excess sealant compound, dirt and other substances.

Lubricate hardware and other moving parts.

9. SUBMITTALS:

Manufacturer's Data

Prior to installation of any work, submit for approval 5 copies of manufacturer's specifications,installation recommendations and standard details for aluminum window units, including fabrication, finishing, hardware and other components of the work. Include certified test laboratory report showing herewith compliance wiht the requirements stated.

END OF SECTION

3727 / NB3727
Vertical Rod Type Exit Device

30 Series Exit Device (Modelo y marca será igual o mejor)

SARGENT
ASSA ABLOY

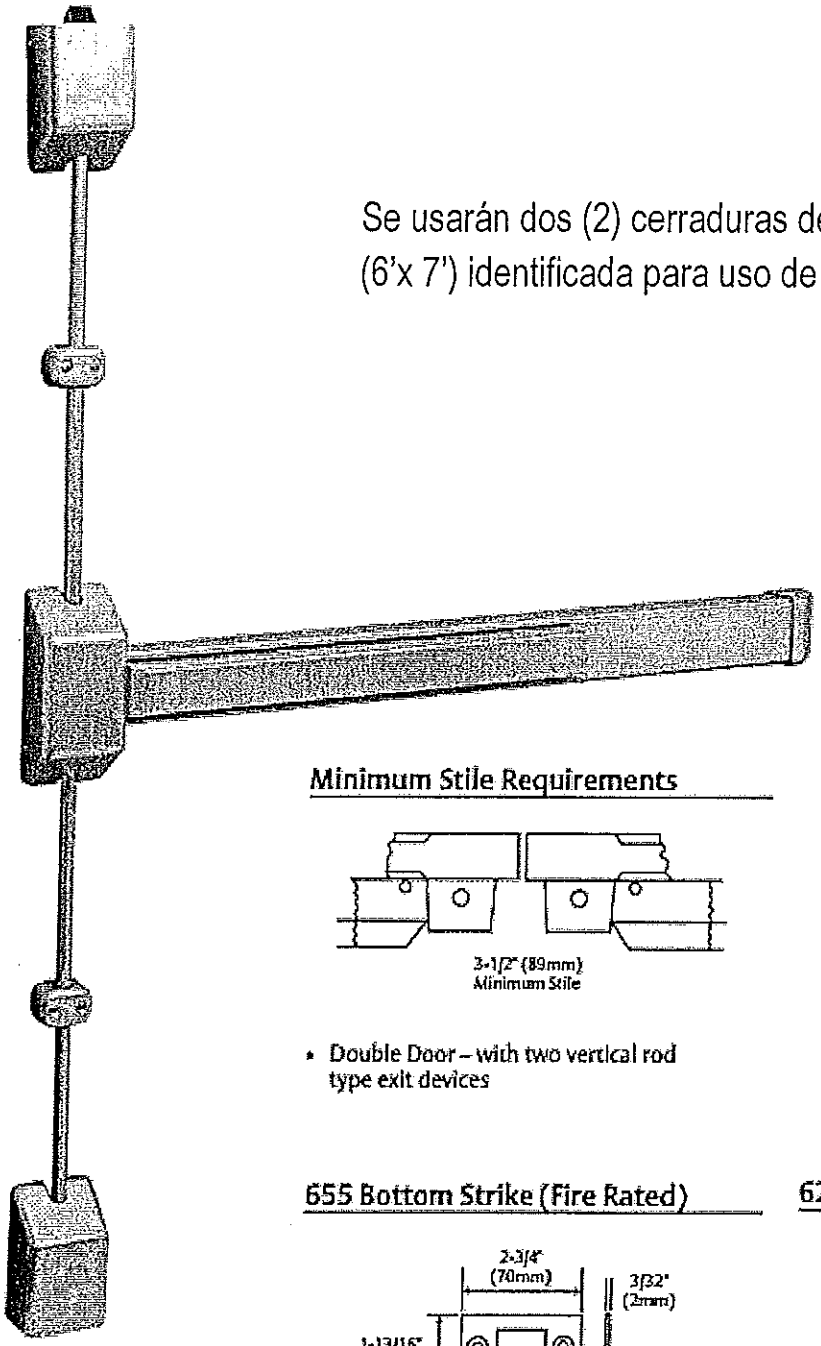

Se usarán dos (2) cerraduras de este tipo por cada puerta doble (6'x 7') identificada para uso de emergencia.

Minimum Stile Requirements

- Double Door – with two vertical rod type exit devices

646 Top Strike

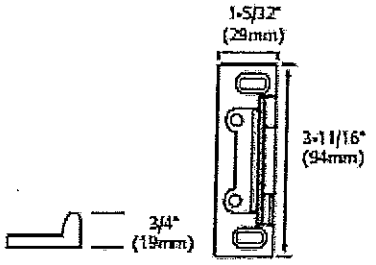

655 Bottom Strike (Fire Rated)

624 Bottom Strike (Panic)

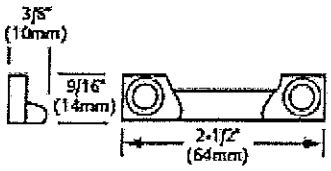

Features, Applications and
UL Fire Door Ratings

30 Series Exit Device (Modelo y marca será igual o mejor)

SARGENT
ASSA ABLOY

Pairs of Doors without Mullion

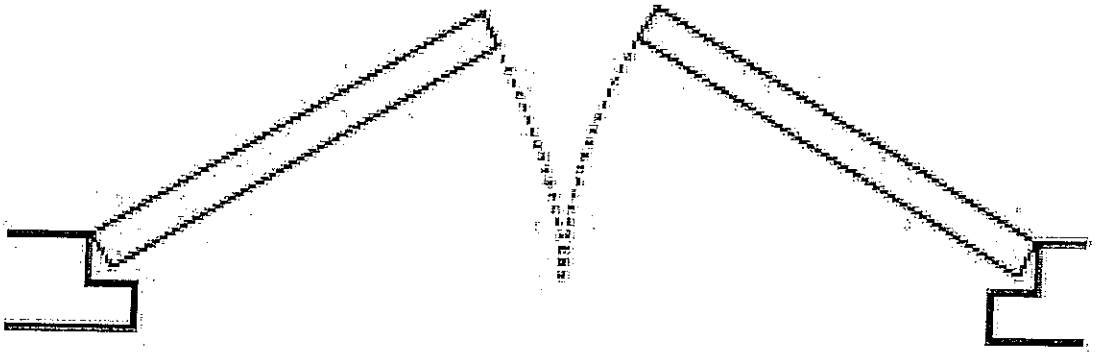

Vertical Rod Type 3727 / NB3727 - 2 Each
Surface applied 2 / 1 point locking both doors. Each door active. Do not use an overlapping astragal.

30 Series Trims

30 Series Exit Device (Modelo y marca será igual o mejor)

SARGENT

ASSA ABLOY

28 Series Lever & Rose Trim for 3727/3828 Series Exit Devices

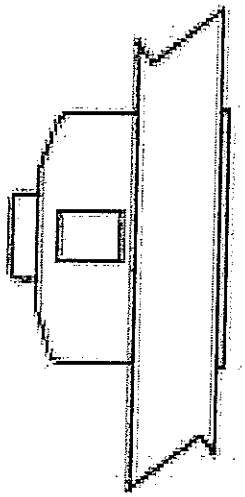

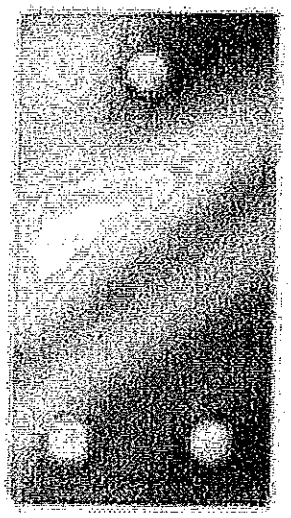

28-E-GTB
Exit Only

Se usará este herraje en la cerradura por la cara exterior de todas las puertas identificadas para uso de emergencia.

3828 Rim Type Exit Device

30 Series Exit Device (Modelo y marca será igual o mejor)

SARGENT
ASSA ABLOY

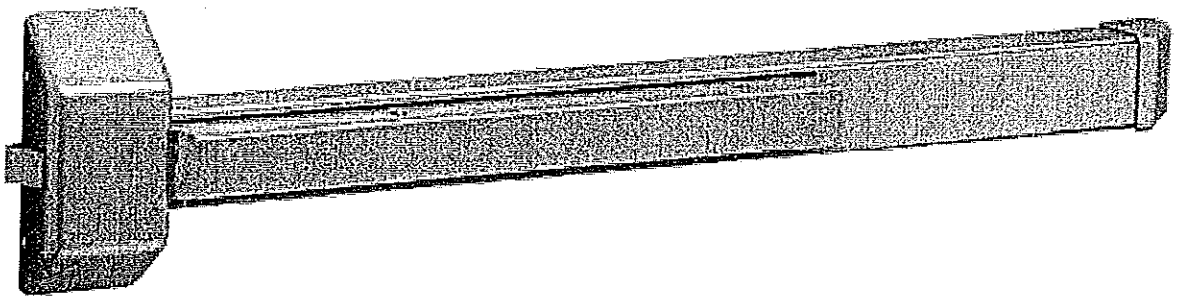

Minimum Stile Requirements

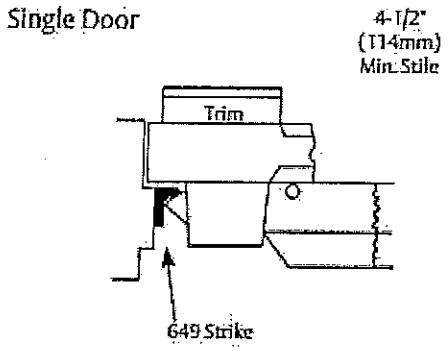

649 Strike

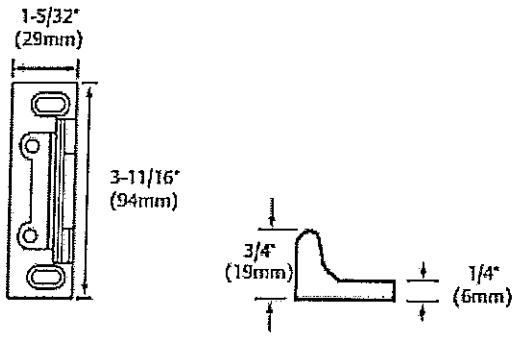

Se usará una (1) cerradura de este tipo por cada puerta sencilla (3' x 7') identificada para uso de emergencia.

SECTION 08710
FINISHING HARDWARE

For listings of subsections, see subsection index at end of section.

PART 1 - GENERAL

1.01 DESCRIPTION:

A. Furnish, install and adjust finishing hardware, as scheduled under enclosed list of hardware sets.

1.02 RELATED WORK:

A. Section 05500: Miscellaneous Metals

B. Section 08500: Windows

C. Section 10999: Building Specialties

1.03 QUALITY ASSURANCE:

A. Requirements of Regulatory Agencies.

1.04 REFERENCES:

A. American National Standards Institute:

1. ANSI A 156.1-1976, Butts and Hinges.

2. ANSI A 156.2-1976, Locks and Lock Trim.

3. ANSI A 156.3-1978, Exit Devices.

4. ANSI A 156.4-1980, Door Controls (Closers).

5. ANSI A 156.5-1978, Auxiliary Locks and Associated Products.

6. ANSI A 156.6-1979, Architectural Door Trim.

7. ANSI A 156.7-1972, Template Hinges.

8. ANSI A 156.8-1974, Door Controls (Overhead Holders).

B. Hardware type numbers in following schedule are keyed to Federal Specifications, except as otherwise specified:

1. FF-H-106C/GEN, Hardware, Builders'; Locks and Door-Trim: General Specification for

2. FF-H-111C, Hardware, Builders'; Shelf and Miscellaneous.

3. FFF-H-116E, Hinges, Hardware, Builders'.

4. FF-H-121D for Hardware, Builders'; Door Closers.

C. Builders Hardware Manufacturers Association:

1. BHMA 1201, Auxiliary Hardware Standards.

2. BHMA 1301, Material and Finishes Standard.

1.05 SUBMITTALS:

A. Shop Drawings: Submit for review, as required by GENERAL SPECIFICATIONS, complete hardware schedule, giving illustrations, descriptive data, manufacturer's specifications, conforming Federal Specification numbers.

B. Templates: Furnish complete hardware location diagrams and templates to the door and frame manufacturer's and other suppliers of work requiring hardware. Ensure accurate location, coordination and proper installation of finishing hardware.

C. Hardware Set Variations: Identify in cover letter, stating changes and reasons.

D. Samples: Provide samples when requested by the Engineer. If samples are requested for proposed substitution, submit both specified hardware and proposed substitution; samples as specified.

1.06 PRODUCT DELIVERY, STORAGE AND HANDLING:

A. Provide packages or containers having labels, identifying each hardware set according to acceptable sets listed.

1.07 JOB CONDITIONS:

A. Protection: Protect hardware from marring and damage of finish during construction. Use removable tapes, strippable coatings, or other means acceptable to Engineer.

PART 2 - PRODUCTS

2.01 GENERAL:

A. Template Hardware: Use templates to locate holes and mounting locations of hardware. Furnish templates and reinforcing units to metal door and frame manufacturer unless otherwise specified. Make metal door and frame hardware to template and secure with machine screws.

B. Butts for exterior doors shall have non-removable pins (N.R.P.) as indicated in Hardware Sets.

2.02 HARDWARE QUALITY:

A. Provide heavy duty hardware sets, suitable for industrial/commercial use one of following manufacturers or acceptable equivalent.

1. Rocky Mountain Hardware, Idaho.

2. Sargent & Co., New Haven, CT.

3. INGERSONLL-RAND, Schlage Lock Company, CO

4. P. & F. Corbin Div., of Russwin Div., Earhart Corp., Berlin, CT.

5. Stanley Hardware Div., New Britain, CT.

2.03 KEYS AND KEYING:

A. Set up locks for system of masterkeying in accordance with schedule furnished by Engineer.

B. Two change keys furnished for each lockset and total of six master keys furnished.

2.04 HARDWARE SETS:

SEE DRAWINGS FOR NUMBER AND SPECIFICATIONS

PART 3 - EXECUTION

3.01 INSTALLATION:

A. Install hardware in accordance with manufacturer's templates and instructions. Fit hardware accurately and properly, then fasten fixed parts securely for smooth, trouble-free and non-binding operation. Fit faces of mortised parts snug and flush. Install operating parts for free and smooth operation without binding, sticking, or excessive clearance.

B. Latch, Guard, and Dead Bolts. Install locksets and Latchsets such that bolts automatically engage in keeper, whether activated by closer or by manual push; in no case apply additional manual pressure be required to engage bolts in keeper.

C. Mount closers on pull side of doors, except at exterior doors mount closers on push side of door unless specifically directed otherwise by the Engineer. Adjust closers to operate evenly and noiselessly. Have manufacturer's representative regulate closers prior to acceptance.

D. Thresholds for aluminum doors shall be provided under Section 08100. All other thresholds required shall be provided under Section 10999.

3.02 ADJUSTING AND CLEANING:

A. After installation examine hardware in place for complete and proper installation.

B. Adjust and lubricate bearing surfaces of moving parts. Adjust latching and holding devices for proper function and door control devices for speed and power.

C. Cleaning Requirements:

1. Make provision for complete removal of protective materials and for thorough cleaning of exposed surfaces of hardware.

2. Prior to final cleaning for acceptance, check hardware for surface damage.

3.03 DEFECTIVE WORK:

A. Replace, rework or otherwise correct as required, hardware found marred, damaged or defective.

PART 4 - SUBSECTION INDEX

A. GENERAL

1.01 Description
1.02 Related Work
1.03 Quality Assurance
1.04 References
1.05 Submittals
1.06 Product Delivery, Storage and Handling
1.07 Job Conditions

B. PRODUCTS

2.01 General
2.02 Hardware Quality
2.03 Keys and Keying
2.04 Hardware Sets

C. EXECUTION

3.01 Installation
3.02 Adjusting and Cleaning
3.03 Defective Work

* * *

SECTION 08810
GLASS AND GLAZING

For listings of subsections, see subsection index at end of section

PART 1 - GENERAL

1.01 DESCRIPTION:

A. Furnish and set all glass required to complete glazing as indicated and as specified.

1.02 RELATED WORK:

A. Section 08100: Doors and Frames

B. Section 08500: Windows

1.03 QUALITY ASSURANCE:

A. Requirements of Regulatory Agencies: Provide glass installation meeting requirements of applicable state and local codes.

B. Design Criteria:

1. Exterior Glass and Glazing:

a. Provide exterior glass and glazing capable of withstanding wind loads as specified.

b. Provide watertight glass and glazing systems.

1.04 REFERENCES:

A. Fed. Spec. DD-G-451D, Glass, Float or Plate, Sheet, Figured (Flat, for Glazing, Mirrors and other uses).

B. Fed. Spec. DD-G-1403B, AMD 1, Glass, Plate (Float), Sheet, Figured, and Spandrel (Heat Strengthened and Fully Tempered).

C. Fed. Spec. L-P-391D, Plastic Sheets, Rods and Tubing, Rigid Cast, Methacrylate (Multiapplication).

D. ANSI Z26.1a-1980, Glazing Material.

E. ANSI Z97.1-1975, Safety Performance Specifications and Methods of Test for Safety Glazing Material Used in Buildings.

F. ASTM D673-1976, Standard Test Method for Mar Resistance of Plastics.

G. ASTM D702-80, Standard Specification for Cast Methacrylate Plastic Sheets, Rods, Tubes, and Shapes.

H. ASTM D1044-78, Standard Test Method for Resistance of Transparent Plastics to Surface Abrasion.

I. ASTM G23-81, Standard Recommendation Practice for Operating Light-and-Water-Exposure Apparatus (Carbon-Arc Type) for Exposure of Nonmetallic Materials.

1.05 SUBMITTALS:

A. Working drawings showing methods of glazing installation.

B. Samples:

1. Three properly labeled samples of each type of glass and glazing material for review.

2. Glass samples not less than 6 in. square.

C. Manufacturer's certification that materials meet or exceed specifications requirements.

1.06 PRODUCT DELIVERY, STORAGE AND HANDLING:

A. Deliver each pane of glass affixed with manufacturer's labels; do not remove labels prior to installation, inspection or final acceptance.

1.07 JOB CONDITIONS:

A. Apply glazing compounds on dry surfaces, at temperatures above 40 degrees Fahrenheit.

PART 2 - PRODUCTS

2.01 GLASS MATERIALS:

A. General:

1. Safety glass conforming to Fed. Spec. DD-G-1403B and ANSI Z97.1-1975, including supplement Z97.1a-1977.

2. Glass Thickness:

a. Provide glass thicknesses as specified unless accepted glass manufacturer recommends greater thickness to meet windload requirements.

b. Provide glass in adjacent windows or glazed panels of same thickness unless shown otherwise.

B. Types:

1. Type A: 1/4-in. thick light reducing, bronze tinted, tempered, float glass, with average daylight transmittance of 50 percent, conforming to Fed. Spec. DD-G-1403, Kind FT, Condition A, Type I, Quality q3, Class 3.

2. Type B: 1/4-in. thick, clear, tempered, float glass conforming to Fed. Spec. DD-G-1403, Kind FT, Condition A, Type I, Quality q3, Class 1.

3. Type C: Unbanded, insulating glass units, having outer sheet of 1/4-in. thick, light reducing, tinted, tempered, float glass, with an average daylight transmittance of 50 percent, conforming to Fed. Spec. DD-G-1403, Kind FT, Condition A, Type I, Quality q3, Class 3; and having inner sheet of 1/4-in. thick, clear, tempered, float glass conforming to Fed. Spec. DD-G-1403, Kind FT, condition A, Type I, Quality q3, Class 1, with a 1/4-in. hermetically sealed air space between.

4. Type D: Unbanded, insulating glass units consisting of two sheets of 1/4-in. thick, clear, tempered, float glass conforming to Fed Spec. DD-G-1403, Kind KT, Condition A, Type I, Quality q3, Class 1, with a 1/4-in. hermetically sealed air space between.

5. Type E: Light reducing, unbanded insulating glass units having outer sheet of 1/4-in. thick, light reducing, bronze tinted, float glass with an average daylight transmittance of 50 percent, conforming to Fed. Spec. DD-G-451, Type I, Class 3, Quality q3; and having inner sheet of 1/4-in. thick, clear float glass conforming to Fed. Spec. DD-G-451, Type I, Class 1, Quality q3, with a 1/2-in. hermetically sealed air space between.

6. Type F: Light reducing, unbanded, insulating glass units having an outer sheet of 1/8-in. thick, light reducing, bronze tinted, sheet glass with a visible light transmittance of 50 percent, conforming to Fed. Spec. DD-G-451, Type II, Class 3, Quality q6; and an inner sheet of 1/8-in. thick clear sheet glass conforming to Fed. Spec. DD-G-451, Type II, Class 1, Quality q6, with a 1/2-in. hermetically sealed air space between.

7. Type G: Unbanded insulating glass units consisting of two sheets of 1/4-in. thick clear, float glass conforming to Fed. Spec. DD-G-451 Type I, Class 1, Quality q3, with 1/2-in. hermetically sealed air space between.

8. Type H: Unbanded insulating glass units consisting of two sheets of 1/8-in. thick clear, sheet glass conforming to Fed. Spec. DD-G-451 Type II, Class 1, Quality q6, with a 1/2-in. hermetically sealed air space between.

9. Type I: 1/4-in. thick, light reducing, bronze-tinted, float glass with visible light transmittance of 50 percent and conforming to Fed. Spec. DD-G-451 Type I, Class 3, Quality q3.

10. Type J: 1/8-in. thick, light-reducing, grey-tinted or bronze-tinted, sheet glass with visible light transmittance of 68 percent and shall conform to Fed. Spec. DD-G-451 Type II, Class 3, Quality q6.

11. Type K: 1/8-in. thick, clear sheet glass conforming to Fed. Spec. DD-G-451 Type II, Class 1, Quality q6.

12. Type L: 1/4-in. thick, clear float glass conforming to Fed. Spec. DD-G-451 Type I, Class 1, Quality q3.

13. Type M: 1/4-in. thick, polished wired glass conforming to Fed. Spec. DD-G-451 Type III, Class 1, Kind A, Form 1, Mesh m1.

14. Type N: 1/8-in. thick, clear patterned glass conforming to Fed. Spec. DD-G-451 Type III, Class 1, Kind A, Form 3, Quality q11, finish F1, Pattern P6.

15. Type O: Unbanded, insulating glass units having outer sheet of 1/8-in. thick, light reducing, bronze tinted, sheet glass with an average daylight transmittance of 50 percent, conforming to Fed. Spec. DD-G-451, Type II, Class 3, Quality q6; and having inner sheet of 1/8-in. thick clear patterned glass conforming to Fed. Spec. DD-G-451, Type III,

Class 1, Kind A, Form 3, Quality q11, Finish f1, Pattern p9 (Burlap), with a 1/2-in. hermetically sealed air space between.

16. Type P: Unbanded, insulating glass units having outer sheet of 1/8-in. thick, clear sheet glass conforming to Fed Spec. DD-G-451, Type II, Class 1, Quality q6; and having inner sheet of 1/8-in. thick clear patterned glass conforming to Fed. Spec. DD-G-451 Type III, Class 1, Kind A, Form 3, Quality q11, Finish f1, Pattern p9 (Burlap), with a 1/2-in. hermetically sealed air space between.

17. Type R: Opaque spandrel glass having 1/4-in. thick, heat-strengthened float glass with a ceramic coloring fused to back surface and conforming to Fed. Spec. DD-G-1403 Kind HS, Condition B, Type I, Quality q3. The color of opaque spandrel glass to approximate color of grey-tinted, light-reducing glass.

18. Type S: 1/2-inch thick clear structural glass.

2.02 PLASTIC MATERIALS:

NOT APPLICABLE

2.03 GLAZING SYSTEM COMPONENTS FOR METAL WINDOWS:

A. Glazing tape, heel bead sealant, removable snap-on metal glazing bead. Components furnished color approximating window finish.

2.04 ELASTIC GLAZING COMPOUND:

A. Channel Glazing: Dap Flexiglaze "1231" manufactured by DAP, Inc., Dayton, OH; 03-251 Channel Glazing Compound manufactured by Pecora Corporation, Harleysville, PA; Mono manufactured by Tremco Manufacturing Co., Cleveland, OH; or acceptable equivalent.

B. Face Glazing: DAP 1012 Glazing Compound manufactured by DAP, Inc., Dayton, OH; M-242 Glazing Compound manufactured by Pecora Corporation, Harleysville, PA; Tremglaze manufactured by Tremco Manufacturing Co., Cleveland, OH; or acceptable equivalent.

PART 3 - EXECUTION

3.01 INSPECTION:

A. Check openings and glazing channels scheduled to receive glass: Free of projections, burrs, irregularities, and debris and other defects that would affect glass or plastic and glazing materials.

B. Inspect glass for edge damage or face imperfections.

C. Correct defects before glazing.

3.02 PREPARATION:

A. Examine frames receiving glass or plastic sheet to ensure if clean and dry.

B. Verify sealants are compatible with glazing materials.

C. Remove oil and dust from glass and plastic materials by wiping clean immediately prior to installation.

D. Use solvents to remove protective coatings or film from aluminum surfaces, that neither etches nor mars surfaces.

3.03 GLAZING:

A. General:

1. Conform to Flat Glass Marketing Association's "Glazing Manual", manufacturer's recommendations and accepted working drawings.

2. Glaze all doors and operating windows in closed position.

3. Maintain edge clearance, in accordance with manufacturers recommendation, from perimeter of glass to inside of rabbet.

4. Maintain minimum 1/8-in. clearance between faces of glass and plastic and adjacent stop or bead.

5. If any glass dimension exceeds 50 inches, provide setting blocks at the sill and spacer shims on other edges.

6. Clean and dry glazing rabbets, glass edges, and applied stops before glazing.

7. Glaze windows neatly and evenly.

8. Do not extend glazing tapes and glazing compounds over edges of glazing stops.

9. Do not apply glazing tapes and glazing compounds more than 1/32 in. under edges of glazing stops.

B. Projected aluminum windows:

1. Cut glazing tapes to proper lengths.

2. Apply glazing tapes to fixed glazing stops; head first, then sill, then jambs.

3. Butt tapes together with no overlap.

4. Daub butted corners with sealant.

5. Maintain a 1/8-inch minimum bed clearance between glass and sash on both exterior and interior sides.

6. Set lights of glass on neoprene blocks having 70-90 Shore A hardness placed at quarter points from each corner.

7. Center glass in openings and press firmly against tape.

8. Apply heel bead of sealant at perimeter of glass to:

a. Maintain 3/16-in. minimum bite to glass.

b. Maintain positive bond to sash.

c. Fill void under glass.

d. Permit firm embedment of tail of vinyl or neoprene wedge strip in sealant.

9. Install snap-on glazing bead.

10. Insert wedge strips into open channel between glass and glazing bead.

a. Precut strips 3/4-in. longer than length of head, sill, and jambs.

b. Place head and sill strips first and then place jamb strips, (1) first place two ends of strips in corner (2) then tuck strips in, starting at middle and working toward each corner.

C. Vision Panels:

1. Glaze with applied glazing beads and elastic glazing compound.

2. Minimum edge clearance of glass: 1/4-in. all around.

3. Minimum face clearance of glass: 1/8-in. from sash rabbet, all around.

D. DOORS

1. Secure glass in place with removable glazing beads and vinyl glazing inserts.

2. Center glass in glazing rabbets.

3. Apply glazing beads to evenly compress inserts between beads and glass to not less than 15 percent.

4. Miter corners of vinyl inserts.

3.04 GLASS REPLACEMENT:

A. Replace broken, scratched or damaged glass due to faulty materials or installation with new glass, at no additional cost.

3.05 PROTECTION:

A. Protect installed glass and plastic against breakage, damage from sandblasting, welding spatter or other sources.

3.06 CLEANING:

A. Clean glass and surrounding surfaces of spatter and blemishes resulting from glazing operations.

B. Prior to final acceptance clean and polish lights inside and outside.

PART 4 - SUBSECTION INDEX

A. GENERAL

1.01 Description
1.02 Related Work
1.03 Quality Assurance
1.04 References
1.05 Submittals
1.06 Product Delivery, Storage and Handling
1.07 Job Conditions

B. PRODUCTS

2.01 Glass Materials
2.02 Plastic Materials
2.03 Glazing System Components for Metal Windows
2.04 Elastic Glazing Compound

C. EXECUTION

3.01 Inspection
3.02 Preparation
3.03 Glazing
3.04 Glass Replacement
3.05 Protection
3.06 Cleaning

* * *

SECTION 09941
FIELD PAINTING

PART 1 - GENERAL

1.01 DESCRIPTION:

A. Furnish and apply required paints and coatings. Prepare, clean, and finish all surfaces specified, scheduled or otherwise indicated to be field painted.

1. The terms "paint" and "coating" used herein include emulsions, enamels, paints, stains, varnishes, sealers, and other coatings, organic or inorganic, whether used as intermediate, or finish coats.

B. Complete painting in accordance with Specifications, and paint manufacturer's current surface preparation and application instructions.

1.02 RELATED WORK:

A. Section 05500: Miscellaneous Metal.

B. Section 09940: Shop Painting.

C. Manufacturer's standard prime paint finishes are specified under the applicable Sections for Architectural, Mechanical and Electrical equipment.

1.03 REFERENCES:

A. Steel Structures Painting Council (SSPC):

1. Paint Application Specifications PA 1-64, No. 1 Shop, Field and Maintenance Painting.

2. Surface Preparation Specifications; No. 10 Near-White Blast Cleaning (SP 10-63T), No. 6 Commercial Blast Cleaning (SP 6-63) and No. 3 Power Tool Cleaning (SP 3-63), including 1971 editorial changes.

B. Military Specifications for Primer (Wash) Pretreatment, Blue (Formula No. 117-B for Metals), MIL-P-15328C(1).

C. American National Standards Institute (ANSI), Scheme for the Identification of Piping Systems, Designation A13.1-1975.

1.04 SUBMITTALS:

A. To aid in determining coating compatibility, submit following:

1. List of coating products proposed, giving brand, type and manufacturer.

2. Manufacturer's current printed recommendations and product data sheets for each.
3. Field painting applicator's correspondence for determining compatibility of field coatings with

primers and for selecting manufacturer producing field coats.

B. Submit color chips of materials proposed, and sample panels of paints and coatings selected. Make samples not less than 12-in. square, on sheet metal for metal coatings, on cement asbestos board for masonry and concrete coatings.

C. Submit Manufacturer's certificates and test reports for the following materials:

1. List materials

1.05 PAINT STORAGE AND MIXING AREAS, AND WASTE DISPOSAL:

A. Store paints and painter's materials only in area or areas designated solely for this purpose. Confine mixing, thinning, clean-up and associated operations, and storage of painting debris before authorized disposal, to these areas.

B. Do not use plumbing fixtures, piping or mechanical equipment for mixing or disposal of paint materials.

1. Transport water to paint area by approved temporary hose or piping.

2. Store waste temporarily in closed, nonflammable containers until final disposal. Keep no rubbish in painter's area longer than 24 hours. Finally dispose of waste in an approved disposal system outside of buildings.

1.06 DELIVERY, HANDLING, STORAGE, PROTECTION:

A. Deliver materials to painter's area in original, unbroken, containers with name and analysis of product, manufacturer's name, and shelf life date. Do not use or retain contaminated, outdated, prematurely opened, or diluted materials.

B. Store coated items carefully. Avoid damaging or dirtying coatings, by contact with soil, pavement or other harmful contacts which might necessitate special cleaning. Use suitable blocking during storage.

C. Do not expose primed surfaces to weather for more than six months before top coating. Allow less open time if recommended by coating manufacturer.

D. During surface preparation, cleaning and painting operations, protect all surfaces not to be painted.

E. Protect coated items, whether prime or finish, from damage due to shipping and handling. For items with type E or S service coatings; use padding, blocking, fabric slings and extra care.

F. Upon completion of field painting, ensure coatings undamaged and in good condition. Make good damage or coating deterioration resulting from failure to observe foregoing requirements.

1.07 JOB CONDITIONS:

A. Environmental Requirements:

1. Comply with manufacturer's recommendations as to environmental conditions under which coatings and coating systems can be applied.

2. Do not apply coatings when dust is being generated.

B. Protection:

1. Cover or otherwise protect finish work of other trades and surfaces not being painted concurrently or not to be painted.

PART 2 - PRODUCTS

2.01 MATERIALS; GENERAL:

A. Paint Coatings: Suitable for intended use, recommended by their manufacturer for intended service.

B. Products Used: Minimum of five years satisfactory use under similar service conditions.

C. Use products of one manufacturer in any one paint coating system; all coating materials compatible. Coatings for touch-up; same as original.

2.02 COLORS AND FINISHES:

A. Interior room finish colors: As indicated in interior finish schedule.

B. All other finish colors as selected from manufacturer's color chips. Color schedule will indicate colors to be used. Match final colors to selected color chips, as scheduled.

C. To provide contrast between successive coats, lightly tint each coat to distinguish it from preceding coats.

D. Unless otherwise indicated, for finish paint use gloss or semigloss on wood and metal, and matte finish or flat on masonry and concrete.

PART 3 - EXECUTION

3.01 INSPECTION:

A. Examine surfaces scheduled to receive paint and finishes for conditions that will adversely affect execution, permanence or quality of work and which cannot be put into an acceptable condition through preparatory work.

B. Do not proceed with surface preparation or coating application until conditions are suitable.

3.02 PREPARATION:

A. Basic Steps:

1. Coordinate cleaning and painting operations to eliminate contamination of one by the other.

2. Maintain all coating materials at manufacturer's recommended mixing and application temperatures for not less than 24 hours before use. Have clean, proper containers, spray equipment, applicators and accessory items ready for use before decanting or mixing paint materials.

3. Ensure proper coordination of materials to be applied hereunder with previous coatings on affected surfaces. Have all manufacturer's written directions on hand, and follow them strictly, except where otherwise specified.

4. Carefully coordinate preparation and material compatibility requirements with the work under Section 09940.

B. Before any paint application, carefully clean all surfaces to be coated of dust, dirt, grease, loose rust, mill scale, paint unsuitable for top coating, efflorescence, oil, moisture, foreign matter or conditions detrimental to coating bond and durability.

1. Following cleaning, apply preparatory treatment in strict accordance with manufacturer's written instructions.

2. Fill imperfections and holes in surfaces to be painted.

C. Concrete For Paint Finishes:

1. Clean thoroughly of all form oil, release agents, dirt, dust, grease, paint, loose material and foreign matter. Remove Latinate, roughen smooth surfaces by brush sand blasting, remove fins and projections, fill voids and honeycombs.

2. Prime where required, after concrete has dried in strict accordance with manufacturer's printed instructions.

3. Concrete floors: Wash with solvent, remove all dirt, dust, grease, wax, and oil. After cleaning and washing, etch with a solution of muriatic acid and water. Allow to etch 15 to 20 minutes, and then rinse thoroughly with water and allow to dry. Muriatic acid solution; one part of 36 percent muriatic acid, 10 parts clean water.

4. Concrete for submerged service: clean and etch as above, or brush sand blast after cleaning. If etching is elected, neutralize with ammonia and rinse thoroughly with clean water.

E. Concrete unit masonry for paint finishes; clean thoroughly by brushing, scraping and sanding or grinding slick areas. Remove loose or projecting mortar, solvent wash oil, grease, paint spots before applying block filler.

F. Provide higher degree of cleaning for acceptable equivalent paint products when paint manufacturer recommends in his printed surface preparation recommendations.

3.03 TOUCH-UP:

A. Before applying field coat, touch-up abraded areas of shop coats with paint of the same type. Apply an entire coat if necessary. Touch-up coats are in addition to, and not a substitute for first field coat. Clean deteriorated surfaces to bare metal before applying touch-up coat.

3.04 APPLICATION:

A. In general, apply minimum of one under coat and one finish coat to all previously primed surfaces. Following careful inspection of surfaces not previously primed, prepare and clean as specified, apply proper prime coat and minimum of one under coat and one finish coat. Refer to Paint Schedule at

end of section.

B. Conditions:

1. Do not apply paints or other finish to wet or damp surfaces, except in accordance with instructions of manufacturer. Do not apply exterior paint during cold, rainy, or frosty weather, or when temperature is likely to drop to freezing. Avoid painting of surfaces while they are exposed to the sun.

2. Paint surfaces which have been cleaned, pretreated, or otherwise prepared for painting with first field coat as soon as practicable after such preparation has been completed, but in any event prior to deterioration of prepared surface.

C. Methods:

1. Spraying with adequate apparatus may be substituted for brush application of suitable paints and in locations suitable for spraying.

2. Prepare surfaces, mix and apply paint materials in strict accordance with manufacturer's printed instructions and recommendations, except where specifically directed otherwise. Control temperature of materials upon mixing and application, surface temperature and condition, thinning and modifying.

3. Protect surfaces to be coated, before, during and after application unless ambient weather conditions are favorable.

D. Workmanship:

1. Spot prime with aluminum paints, all exposed nails and other ferrous metal on surfaces to be painted with water-thinned paints.

2. Apply coating materials to meet manufacturer's spreading rate and dry film thickness recommendations. Dry film thicknesses specified are constant for brush, spray, roller or other form of application.

   a. Control thinning for spray use and to manufacturer's printed instructions, and produce specified dry film thickness on level surfaces, interior and exterior angles.

   b. Record quantities of materials of each type, for each coat, used in each location.

3. Apply paints and coatings using skilled painters, brushed or rolled out carefully to a smooth, even coating without runs or sags. Flow enamel on evenly and smoothly. Allow each coat of paint to dry thoroughly, on the surface and throughout the film thickness, before the next coat is applied. High polymer coatings may be excepted from the drying requirement if recoat time is specified by manufacturer.

4. Finish surfaces: Uniform in finish and color, and free from flash spots and brush marks.

5. Accessory items, finish hardware, lighting fixtures, escutheons, plates, trim and similar finish items not to be painted: Remove or carefully mask before painting adjacent surfaces. Carefully replace and reposition upon completion of adjacent painting and cleaning work.

3.05 PROTECTION, CLEAN-UP:

A. Protect all materials and surfaces painted or coated under this section, both before and after application. Also protect all adjacent work and materials by the use of sufficient dropcloths during the progress of this work. Upon completion of the work, clean up all paint spots, oil, and stains from floors, glass, hardware, and similar finished items.

3.06 PAINT SCHEDULE:

A. Coordinate, schedule and confirm the various cleaning, touch-up and finishing operations. Ensure the transmission of materials data, color selections and coating system methods between the coating applicators. Take responsibility for not exceeding exposure and recoat time limits.

3.07 FINAL TOUCH-UP:

A. Prior to final completion and acceptance, examine painted and finished surfaces and retouch or refinish as necessary and required to leave surfaces in perfect condition.

B. After doors have been fitted and hung, refinish edges, tops and bottom.

SECTION 102800 - TOILET, BATH, AND LAUNDRY ACCESSORIES

PART 1 - GENERAL

1.1 SECTION REQUIREMENTS

A. Submittals: Product Data.

PART 2 - PRODUCTS

2.1 MATERIALS

A. Stainless Steel: ASTM A 666, Type 304, No. 4 finish (satin), 0.0312-inch minimum nominal thickness unless otherwise indicated.

B. Brass: ASTM B 19, ASTM B 16, or ASTM B 30.

C. Aluminum: ASTM B 221, Alloy 6063-T6 or 6463-T6.

D. Sheet Steel: ASTM A 1008/A 1008M, 0.0359-inch minimum nominal thickness.

E. Galvanized-Steel Sheet: ASTM A 653/A 653M, G60.

F. Chromium Plating: ASTM B 456, Service Condition Number SC 2 (moderate service).

G. Baked-Enamel Finish: Factory-applied, gloss-white, baked-acrylic-enamel coating.

H. Tempered Glass: ASTM C 1048, Kind FT (fully tempered).

I. Mirrors: ASTM C 1503, Mirror Glazing Quality, clear-glass mirrors, nominal 6.0 mm thick.

J. Galvanized-Steel Mounting Devices: ASTM A 153/A 153M, hot-dip galvanized after fabrication.

K. Fasteners: Screws, bolts, and other devices of same material as accessory unit, tamper and theft resistant when exposed, and of galvanized steel when concealed.

L. Keys: Provide universal keys for internal access to accessories for servicing and resupplying. Provide minimum of six keys to Owner's representative.

M. TOILET AND BATH ACCESSORIES

1. **(REFER TO CONSTRUCTION PLANS FOR ACCESSORIES SPECIFICATIONS)**

PART 3 - EXECUTION

3.1 INSTALLATION

A. Install accessories using fasteners appropriate to substrate indicated and recommended by unit manufacturer. Install units level, plumb, and firmly anchored in locations and at heights indicated.

1. Install grab bars to withstand a downward load of at least 250 lbf, when tested according to method in ASTM F 446.

B. Adjust accessories for unencumbered, smooth operation and verify that mechanisms function properly. Replace damaged or defective items. Remove temporary labels and protective coatings.

END OF SECTION 102800

SECTION 15060
PIPING-GENERAL

ART 1 GENERAL

1.1 REFERENCES

A. The following is a list of standards which may be referenced in this section and any supplemental Data Sheets:

1. American Association of State Highway and Transportation Officials (AASHTO): Standard Specifications for Highway Bridges.
2. American National Standards Institute (ANSI):
   a. A21.52, Ductile Iron Pipe, Centrifugally Cast, for Gas.
   b. B1.20.1, Pipe Threads, General Purpose (Inch).
   c. B16.1, Cast Iron Pipe Flanges and Flanged Fittings.
   d. B16.3, Malleable Iron Threaded Fittings.
   e. B16.5, Pipe Flanges and Flanged Fittings.
   f. B16.9, Factory-Made Wrought Steel Buttwelding Fittings.
   g. B16.11, Forged Fittings, Socket-Welding and Threaded.
   h. B16.15, Cast Bronze Threaded Fittings, Classes 125 and 250.
   i. B16.21, Nonmetallic Flat Gaskets for Pipe Flanges.
   j. B16.22, Wrought Copper and Copper Alloy Solder Joint Pressure Fittings.
   k. B16.24, Cast Copper Alloy Pipe Flanges and Flanged Fittings Class 150, 300, 400, 600, 900, 1500 and 2500.
   l. B16.25, Butt Welding Ends.
   m. B16.42, Ductile Iron Pipe Flanges and Flanged Fittings, Classes 150 and 300.
3. American Petroleum Institute (API): 5L, Specification for Line Pipe.
4. American Society of Mechanical Engineers (ASME):
   a. Boiler and Pressure Vessel Code, Section VIII, Division 1, Pressure Vessels.
   b. Boiler and Pressure Vessel Code, Section IX, Welding and Brazing Qualifications.
   c. B31.1, Power Piping.
   d. B31.3, Chemical Plant and Petroleum Refinery Piping.
   e. B31.9, Building Services Piping.
   f. B36.10M, Welded and Seamless Wrought Steel Pipe.
5. American Society for Nondestructive Testing (ASNT): SNT-TC-1A, Recommended Practice for Nondestructive Testing Personnel Qualifications.
6. American Society for Testing and Materials (ASTM):
   a. A47, Standard Specification for Ferritic Malleable Iron Castings.
   b. A53 Rev A, Standard Specification for Pipe, Steel, Black and Hot-Dipped, Zinc-Coated, Welded and Seamless.
   c. A105/A105M, Standard Specification for Forgings, Carbon Steel, for Piping Components.
   d. A106, Standard Specification for Seamless Carbon Steel Pipe for High Temperature Service.
   e. A126, Standard Specification for Gray Iron Castings for Valves, Flanges, and Pipe Fittings.
   f. A135, Standard Specification for Electric-Resistance-Welded Steel Pipe.
   g. A139 Rev A, Standard Specification for Electric-Fusion (Arc)-Welded Steel Pipe (NPS 4 and Over).

h. A153, Standard Specification for Zinc Coating (Hot-Dip) on Iron and Steel Hardware.
i. A181/A181M Rev A, Standard Specification for Forgings, Carbon Steel, for General-Purpose Piping.
j. A182/A182M Rev C, Standard Specification for Forged or Rolled Alloy-Steel Pipe Flanges, Forged Fittings, and Valves and Parts for High-Temperature Service.
k. A183, Standard Specification for Carbon Steel Track Bolts and Nuts.
l. A193/A193M Rev A, Standard Specification for Alloy-Steel and Stainless Steel Bolting Materials for High-Temperature Service.
m. A194/A194M, Standard Specification for Carbon and Alloy Steel Nuts for Bolts for High-Pressure and High-Temperature Service.
n. A197, Standard Specification for Cupola Malleable Iron.
o. A216/A216M, Standard Specification for Steel Castings, Carbon, Suitable for Fusion Welding, for High Temperature Service.
p. A234/A234M, Standard Specification for Piping Fittings of Wrought Carbon Steel and Alloy Steel for Moderate and Elevated Temperatures.
q. A240, Standard Specification for Heat-Resisting Chromium and Chromium-Nickel Stainless Steel Plate, Sheet and Strip for Pressure Vessels.
r. A276, Standard Specification for Stainless and Heat-Resisting Steel Bars and Shapes.
s. A283/A283M Rev A, Standard Specification for Low and Intermediate Tensile Strength Carbon Steel Plates.
t. A285/A285M, Standard Specification for Pressure Vessel Plates, Carbon Steel, Low and Intermediate Tensile Strength.
u. A307, Standard Specification for Carbon Steel Bolts and Studs, 60,000 psi Tensile Strength.
v. A312/A312M, Standard Specification for Seamless and Welded Austenitic Stainless Steel Pipes.
w. A320/A320M, Standard Specification for Alloy Steel Bolting Materials for Low-Temperature Service.
x. A395, Standard Specification for Ferritic Ductile Iron Pressure-Retaining Castings for Use at Elevated Temperatures.
y. A403/A403M Rev A, Standard Specification for Wrought Austenitic Stainless Steel Piping Fittings.
z. A409/A409M, Standard Specification for Welded Large Diameter Austenitic Steel Pipe for Corrosive or High-Temperature Service.
aa. A536, Standard Specification for Ductile Iron Castings.
bb. A563, Standard Specification for Carbon and Alloy Steel Nuts.
cc. A587, Standard Specification for Electric-Resistance-Welded Low-Carbon Steel Pipe for the Chemical Industry.
dd. A774/A774M, Standard Specification for As-Welded Wrought Austenitic Stainless Steel Fittings for General Corrosive Service at Low and Moderate Temperatures.
ee. A778 Rev A, Standard Specification for Welded, Unannealed Austenitic Stainless Steel Tubular Products.
ff. B32, Standard Specification for Solder Metal.
gg. B43, Standard Specification for Seamless Red Brass Pipe, Standard Sizes.
hh. B61, Standard Specification for Steam or Valve Bronze Castings.
ii. B62, Standard Specification for Composition Bronze or Ounce Metal Castings.
jj. B75, Standard Specification for Seamless Copper Tube.

kk. B88 Rev A, Standard Specification for Seamless Copper Water Tube.
ll. B98, Standard Specification for Copper-Silicone Alloy Rod, Bar, and Shapes.
mm. C582, Standard Specification for Contact-Molded Reinforced Thermosetting Plastic (RTP) Laminates for Corrosion Resistant Equipment.
nn. D412, Standard Test Methods for Vulcanized Rubber and Thermoplastic Rubbers and Thermoplastic Elastomers-Tension.
oo. D413, Standard Test Methods for Rubber Property-Adhesion to Flexible Substrate.
pp. D1248, Standard Specification for Polyethylene Plastics Molding and Extrusion Materials.
qq. D1330, Standard Specification for Rubber Sheet Gaskets.
rr. D1784, Standard Specification for Rigid Poly(Vinyl Chloride) (PVC) Compounds and Chlorinated Poly(Vinyl Chloride) (CPVC) Compounds.
ss. D1785, Standard Specification for Poly(Vinyl Chloride) (PVC) Plastic Pipe, Schedules 40, 80, and 120.
tt. D2000, Standard Classification System for Rubber Products in Automotive Applications.
uu. D2310, Standard Classification for Machine-Made "Fiberglass" (Glass-Fiber-Reinforced Thermosetting-Resin) Pipe.
vv. D2464, Standard Specification for Threaded Poly(Vinyl Chloride) (PVC) Plastic Pipe Fittings, Schedule 80.
ww. D2466, Standard Specification for Poly(Vinyl Chloride) (PVC) Plastic Pipe Fittings, Schedule 40.
xx. D2467, Standard Specification for Socket-Type Poly(Vinyl Chloride) (PVC) Plastic Pipe Fittings, Schedule 80.
yy. D2564, Standard Specification for Solvent Cements for Poly(Vinyl Chloride) (PVC) Plastic Piping Systems.
zz. D2996, Standard Specification for Filament-Wound "Fiberglass" (Glass-Fiber-Reinforced Thermosetting Resin) Pipe.
aaa. D3222 Rev A, Standard Specification for Unmodified Poly(Vinylidene Fluoride) (PVDF) Molding Extrusion and Coating Materials.
bbb. D3350, Standard Specification for Polyethylene Plastics Pipe and Fittings Materials.
ccc. D4101 Rev B, Standard Specification for Propylene Plastic Injection and Extrusion Materials.
ddd. F437, Standard Specification for Threaded Chlorinated Poly(Vinyl Chloride) (CPVC) Plastic Pipe Fittings, Schedule 80.
eee. F439 Rev A, Standard Specification for Socket-Type Chlorinated Poly(Vinyl Chloride) (CPVC) Plastic Pipe Fittings, Schedule 80.
fff. F441, Standard Specification for Chlorinated Poly(Vinyl Chloride) (CPVC) Plastic Pipe, Schedules 40 and 80.
ggg. F491 Rev A, Standard Specification for Poly(Vinylidene Fluoride) (PVDF) Plastic-Lined Ferrous Metal Pipe and Fittings.
hhh. F493 Rev A, Standard Specification for Solvent Cements for Chlorinated Poly(Vinyl Chloride) (CPVC) Plastic Pipe and Fittings.
iii. F714, Standard Specification for Polyethylene (PE) Plastic Pipe (SDR-PR) Based On Outside Diameter.

7. American Welding Society (AWS):
   a. A5.8, Specification for Filler Metals for Brazing and Braze Welding.
   b. QC 1, Standard for AWS Certification of Welding Inspectors.
8. American Water Works Association (AWWA):

a. C104/A21.4, Cement-Mortar Lining for Ductile-Iron Pipe and Fittings for Water.
b. C110/A21.10, Ductile-Iron and Gray-Iron Fittings, 3 Inches Through 48 Inches for Water and Other Liquids.
c. C111/A21.11, Rubber-Gasket Joints for Ductile-Iron Pressure Pipe and Fittings.
d. C115/A21.15, Flanged Ductile-Iron Pipe with Threaded Flanges.
e. C151/A21.51, Ductile-Iron Pipe, Centrifugally Cast, for Water or Other Liquids.
f. C153/A21.53, Ductile-Iron Compact Fittings 3 Inches Through 16 Inches, for Water and Other Liquids.
g. C200, Steel Water Pipe - 6 Inches and Larger.
h. C205, Cement-Mortar Protective Lining and Coating for Steel Water Pipe-4 Inches and Larger-Shop Applied.
i. C207, Steel Pipe Flanges for Water Works Service, Sizes 4 Inches Through 144 Inches.
j. C208, Dimensions for Fabricated Steel Water Pipe Fittings.
k. C214, Fusion Bonded Epoxy Coating for the Interior and Exterior of Steel Water Pipelines.
l. C606, Grooved and Shouldered Type Joints.
m. M11, Steel Pipe - A Guide for Design and Installation.

9. Manufacturers Standardization Society of the Valve and Fittings Industry, Inc. (MSS): SP43, Wrought Stainless Steel Butt-Welding Fittings Including Reference to Other Corrosion Resistant Materials.
10. National Fire Protection Association (NFPA): 24, Standard for the Installation of Private Fire Service Mains and Their Appurtenances.

1.2 DEFINITIONS

A. Submerged or Wetted:

1. Zone below elevation of:
   a. Top face of channel walls and cover slabs.
   b. Top of tank wall or under tank cover.

1.3 DESIGN REQUIREMENTS

A. Where pipe diameter, thickness, pressure class, pressure rating, or thrust restraint is not shown or specified, design piping system in accordance with the following:

1. Sanitary Building Drainage and Vent Systems: ICBO/IAPMO Uniform Plumbing Code and Local plumbing code.
2. Buried Piping: H20-S16 traffic load with 1.5 impact factor, AASHTO Standard Specifications for Highway Bridges, as applicable.
3. Thrust Restraints:
   a. Design for test pressure shown in Piping Schedule.
   b. Allowable Soil Pressure: 1,000 pounds per square foot.
   c. Low Pressure Pipelines:
      1) When bearing surface of the fitting against soil provides an area equal to or greater than area required for thrust restraint, concrete thrust blocks will not be required.
      2) Determine bearing area for fittings without thrust blocks by projected area of 70 percent of internal diameter multiplied by chord length for fitting centerline curve.

1.4 SUBMITTALS

A. Shop Drawings:

1. Shop Fabricated Piping:
   a. Detailed pipe fabrication or spool drawings showing special fittings and bends, dimensions, coatings, and other pertinent information.
   b. Layout drawing showing location of each pipe section and each special length; number or otherwise designate laying sequence on each piece.
2. Pipe Wall Thickness: Identify wall thickness and rational method or standard applied to determine wall thickness for each size of each different service including exposed, submerged, buried, and concrete-encased installations for CONTRACTOR-designed piping.
3. Hydraulic Thrust Restraint for Restrained Joints: Details including materials, sizes, assembly ratings, and pipe attachment methods.
4. Thrust Blocks: Concrete quantity, bearing area on pipe, and fitting joint locations.
5. Dissimilar Buried Pipe Joints: Joint types and assembly drawings.

B. Quality Control Submittals:

1. Manufacturer's Certification of Compliance.
2. Laboratory Testing Equipment: Certified calibrations, manufacturer's product data, and test procedures.
3. Certified welding inspection and test results.
4. Qualifications:
   a. Weld Inspection and Testing Agency: Certification and qualifications.
   b. Welding Inspector: Certification and qualifications.
   c. Welders:
      1) List of qualified welders and welding operators.
      2) Current test records for qualified welder(s) and weld type(s) for factory and field welding.
5. Weld Procedures: Records in accordance with ASME Boiler and Pressure Vessel Code, Section IX for weld type(s) and base metal(s).
6. Nondestructive inspection and testing procedures.
7. Manufacturer's Certification of Compliance:
   a. Pipe and fittings.
   b. Welding electrodes and filler materials.
   c. Factory applied resins and coatings.
8. Certified weld inspection and test reports.
9. Test logs.
10. Pipe coating applicator certification.

1.5 QUALIFICATIONS

A. Independent Inspection and Testing Agency:

1. Ten years' experience in field of welding and welded pipe and fittings' testing required for this Project.
2. Calibrated instruments and equipment, and documented standard procedures for performing specified testing.
3. Certified in accordance with ASNT SNT-TC-1A for testing procedures required for this Project.
4. Testing Personnel: Qualified for nondestructive test methods to be performed.

5. Inspection Services: Qualified welding inspector.

B. Welding Inspector: AWS certified, AWS QC 1 qualified, with prior inspection experience of welds specified.

C. Welder and Welding Operator Qualifications:

1. Qualified by accepted inspection and testing agency before starting Work in accordance with Section IX, Article III of the ASME Boiler and Pressure Vessel Code.
2. Qualified to perform groove welds in Positions 2G and 5G for each welding process and pipe material specified.
3. Qualification tests may be waived by ENGINEER based on evidence of prior qualification.
4. Retesting: Upon ENGINEER's written request, retest qualified welder(s)

D. Solvent Welder For Double Wall Containment Piping: Qualified in accordance with Chapter VII of the ASME B31.3 Code, Part 9, Paragraph A328.

1.6 QUALITY CONTROL

A. Provide services of independent inspection and testing agency for welding operations.

1.7 DELIVERY, STORAGE, AND HANDLING

A. In accordance with Section 01600, MATERIAL AND EQUIPMENT, and:

1. Flanges: Securely attach metal, hardboard, or wood protectors over entire gasket surface.
2. Threaded or Socket Welding Ends: Fit with metal, wood, or plastic plugs or caps.
3. Linings and Coatings: Prevent excessive drying.
4. Cold Weather Storage: Locate products to prevent coating from freezing to ground.
5. Handling: Use heavy canvas or nylon slings to lift pipe and fittings.

PART 2 PRODUCTS

2.1 PIPING

A. As specified on Piping Schedule located on Drawings

B. Diameters Shown:

1. Standardized Products: Nominal size.
2. Fabricated Steel Piping (Except Cement-Lined): Outside diameter, ASME B36.10M.
3. Cement-Lined Steel Pipe: Lining inside diameter.

2.2 JOINTS

A. Grooved End System:

1. Rigid, except where joints are used to correct misalignment, to provide flexibility, or where shown, furnish flexible type.
2. Flanges: When required, furnish with grooved type flange adapters of same manufacturer as grooved end couplings.

B. Flanged Joints:

1. Flat-faced carbon steel or alloy flanges when mating with flat-faced cast or ductile iron flanges.
2. Higher pressure rated flanges as required to mate with equipment when equipment flange is of higher pressure rating than required for piping.

C. Threaded Joints: NPT taper pipe threads in accordance with ANSI B1.20.1.

D. Thrust Tie-Rod Assemblies: NFPA 24; tie-rod attachments relying on clamp friction with pipe barrel to restrain thrust are unacceptable.

E. Mechanical Joint Anchor Gland Follower:

1. Ductile iron anchor type, wedge action, with breakoff tightening bolts.
2. Manufacturer and Product: EBAA Iron Inc.; Megalug.

F. Flexible Mechanical Compression Joint Coupling:

1. Stainless steel, ASTM A276, Type 305 bands.
2. Manufacturers:
   a. Pipeline Products Corp.
   b. Ferno Joint Sealer Co.

G. Mechanical connections of the high density polyethylene pipe to auxiliary equipment such as valves, pumps, tanks, and other piping systems shall be through flanged connections consisting of the following:

1. A polyethylene stub end thermally butt-fused to the end of the pipe.
2. ASTM A240, Type 304 stainless steel backing flange, 125-pound, ANSI B16.1 Standard. Insulating flanges shall be used where shown.
3. Bolts and nuts of sufficient length to show a minimum of three complete threads when the joint is made and tightened to the manufacturer's standard. Retorque the nuts after 4 hours.
4. Gaskets as specified on Data Sheet.

2.3 COUPLINGS

A. Steel Middle Rings and Followers:

1. Fusion bonded, epoxy-lined, and coated in accordance with Section 09900, PAINTING

B. Flexible Couplings:

1. Manufacturers and Products:
   a. Steel Pipe:
      1) Dresser; Style 38.
      2) Smith-Blair; Style 411.
   b. Ductile Iron Pipe:

1) Dresser; Style 153.
2) Smith-Blair; Style 411.

C. Transition Couplings:

1. Manufacturers and Products:
   a. Dresser; Style 162.
   b. Smith-Blair; Style 413.

D. Flanged Coupling Adapters:

1. Manufacturers and Products:
   a. Steel Pipe:
      1) Smith-Blair; Series 913.
      2) Dresser Industries, Inc.; Style 128.
   b. Ductile Iron Pipe:
      1) Smith-Blair; Series 912.
      2) Dresser Industries, Inc.; Style 127.

2.4 GASKET LUBRICANT

A. Lubricant shall be supplied by pipe manufacturer and no substitute or "or-equal" will be allowed.

2.5 DOUBLE WALL CONTAINMENT PIPING SYSTEM

A. All system components shall be pre-engineered, factory fabricated, tested, and assembled such that field assembly is minimized to primarily that of straight joints.

2.6 THRUST BLOCKS

A. Concrete: As specified in Section 03300, CAST-IN-PLACE, 03301, REINFORCED CONCRETE.

2.7 VENT AND DRAIN VALVES

A. Pipelines 2-1/2-Inch Diameter and Larger: 3/4-inch vent, 1-inch drain unless shown otherwise.

B. Pipeline 2-Inch Diameter and Smaller: 1/2-inch vent, 1-inch drain, unless shown otherwise.

2.8 FABRICATION

A. Mark each pipe length on outside:

1. Size or diameter and class.
2. Manufacturer's identification and pipe serial number.
3. Location number on laying drawing.
4. Date of manufacture.

B. Code markings according to approved Shop Drawings.

C. Flanged pipe shall be fabricated in the shop, not in the field, and delivered to the site with flanges in place and properly faced. Threaded flanges shall be individually fitted and machine tightened on matching threaded pipe by the manufacturer.

2.9 FINISHES

A. Factory prepare, prime, and finish coat in accordance with Pipe Data Sheet(s) and Piping Schedule.

B. Galvanizing:

1. Hot-dip applied, meeting requirements of ASTM A153.
2. Electroplated zinc or cadmium plating is unacceptable.
3. Stainless steel components may be substituted where galvanizing is specified.

PART 3 EXECUTION

3.1 EXAMINATION

A. Verify size, material, joint types, elevation, horizontal location, and pipe service of existing pipelines to be connected to new pipelines or new equipment.

B. Inspect size and location of structure penetrations to verify adequacy of wall pipes, sleeves, and other openings.

C. Welding Electrodes: Verify proper grade and type, free of moisture and dampness, and coating is undamaged.

3.2 PREPARATION

A. Notify ENGINEER at least 2 weeks prior to field fabrication of pipe or fittings.

B. Inspect pipe and fittings before installation, clean ends thoroughly, and remove foreign matter and dirt from inside.

C. Damaged Coatings and Linings: Repair using original coating and lining materials in accordance with manufacturer's instructions except for damaged glass-lined pipe or PVDF-lined pipe that is to be promptly removed from the site.

3.3 WELDING

A. Perform in accordance with Section IX, ASME Boiler and Pressure Vessel Code and ASME B31.1, B31.3, B31.9 for Pressure Piping, as may be specified on Piping Data Sheets, and if recommended by piping or fitting manufacturer.

B. Weld Identification: Mark each weld with symbol identifying welder.

C. Pipe End Preparation:

1. Machine Shaping: Preferred.
2. Oxygen or Arc Cutting: Smooth to touch, true, and slag removal by chipping or grinding.
3. Beveled Ends for Butt Welding: ANSI B16.25.

D. Surfaces:

1. Clean and free of paint, oil, rust, scale, slag, or other material detrimental to welding.
2. Clean stainless steel joints with stainless steel wire brushes or stainless steel wool prior to welding.
3. Thoroughly clean each layer of deposited weld metal, including final pass, prior to deposition of each additional layer of weld metal with a power-driven wire brush.

E. Alignment and Spacing:

1. Align ends to be joined within existing commercial tolerances on diameters, wall thicknesses, and out-of-roundness.
2. Root Opening of Joint: As stated in qualified welding procedure.
3. Minimum Spacing of Circumferential Butt Welds: Minimum four times pipe wall thickness or 1 inch, whichever is greater.

F. Climatic Conditions:

1. Do not perform welding if there is impingement of any rain, snow, sleet, or high wind on the weld area, or if the ambient temperature is below 32 degrees F.
2. Stainless Steel and Alloy Piping: If the ambient is less than 32 degrees F, local preheating to a temperature warm to the hand is required.

G. Tack Welds: Performed by qualified welder using same procedure as for completed weld, made with electrode similar or equivalent to electrode to be used for first weld pass, and not *defective*. Remove those not meeting requirements prior to commencing welding procedures.

H. Surface Defects: Chip or grind out those affecting soundness of weld.

I. Weld Passes: As required in welding procedure.

J. Weld Quality: Free of cracks, incomplete penetration, weld undercutting, excessive weld reinforcement, porosity slag inclusions, and other defects in excess of limits shown in applicable piping code.

3.4 INSTALLATION-GENERAL

A. Join pipe and fittings in accordance with manufacturer's instructions, unless otherwise shown or specified.

B. Remove foreign objects prior to assembly and installation.

C. Flanged Joints:

1. Install perpendicular to pipe centerline.
2. Bolt Holes: Straddle vertical centerlines, aligned with connecting equipment flanges or as shown.
3. Use torque-limiting wrenches to ensure uniform bearing and proper bolt tightness.
4. Plastic Flanges: Install annular ring filler gasket at joints of raised-face flange.

5. Raised-Face Flanges: Use flat-face flange when joining with flat-faced ductile or cast iron flange.

D. Threaded and Coupled Joints:

1. Conform with ANSI B1.20.1.
2. Produce sufficient thread length to ensure full engagement when screwed home in fittings.
3. Countersink pipe ends, ream and clean chips and burrs after threading.
4. Make connections with not more than three threads exposed.
5. Lubricate male threads only with thread lubricant or tape as specified on Piping Data Sheets.

E. Soldered Joints:

1. Use only solder specified for particular service.
2. Cut pipe ends square and remove fins and burrs.
3. After thoroughly cleaning pipe and fitting of oil and grease using solvent and emery cloth, apply noncorrosive flux to the male end only.
4. Wipe excess solder from exterior of joint before hardened.
5. Before soldering, remove stems and washers from solder joint valves.

F. Couplings:

1. General:
   a. Install in accordance with manufacturer's written instructions.
   b. Before coupling, clean pipe holdback area of oil, scale, rust, and dirt.
   c. Remove pipe coating if necessary to present smooth surface.
2. Application:
   a. Metallic Piping Systems: Flexible couplings, transition couplings, and flanged coupling adapters.
   b. Nonmetallic Piping Systems: Teflon bellows connector.
   c. Concrete Encased Couplings: Sleeve type coupling.
   d. Corrosive Service Piping: Elastomer bellows connector.
   e. Grit Slurry Piping: Elastomer bellows connector.

G. Service Saddle Applications:

1. Ferrous Metal Piping (except stainless steel): Double-strap iron.
2. Plastic Piping: Nylon-coated iron.

H. Pipe Connections at Concrete Structures: As specified in Article PIPING FLEXIBILITY PROVISIONS in Section 15120, PIPING SPECIALTIES.

I. Penetrations:

1. Watertight Penetrations:
   a. Provide wall pipes with thrust collars.
   b. Provide taps for stud bolts in flanges to be set flush with wall face.
2. Nonwatertight Penetrations:
   a. Pipe sleeves with seep ring as specified in Section 15120, PIPING SPECIALTIES.
   b. Pipe sleeves with modular mechanical seal may be provided where fabrication of seep ring on pipe sleeve is impractical.
3. Existing Walls:

a. Pipe sleeve with modular mechanical seal as specified in Section 15120, PIPING SPECIALTIES.
b. Rotary drilled holes may be provided in lieu of sleeves in concrete walls.

4. Fire-Rated or Smoke-Rated Walls, Floor, or Ceilings: Insulated and encased pipe sleeves as specified in Section 15120, PIPING SPECIALTIES.

J. PVC and CPVC Piping:

1. Provide Schedule 80 threaded nipple where necessary to connect to threaded valve or fitting.
2. Use strap wrench for tightening threaded plastic joints. Do not overtighten fittings.
3. Do not thread Schedule 40 pipe.

K. Ductile Iron, Cement-Lined Ductile Iron, and Glass-Lined Ductile Iron Piping:

1. Cutting Pipe: Cut pipe with milling type cutter, rolling pipe cutter, or abrasive saw cutter. Do not flame cut.
2. Dressing Cut Ends:
   a. General: As required for the type of joint to be made.
   b. Rubber Gasketed Joints: Remove sharp edges or projections.
   c. Push-On Joints: Bevel, as recommended by pipe manufacturer.
   d. Flexible Couplings, Flanged Coupling Adapters, and Grooved End Pipe Couplings: As recommended by the coupling or adapter manufacturer.

L. PVDF-Lined Steel Pipe Installation:

1. Cut, make up, and install pipe in accordance with pipe manufacturer's written instructions.
2. Weld vent extension half-couplings in place prior to lining pipe.
3. Do not weld on pipe after lining is installed.
4. Prevent plugging of vent extensions with insulation or paint.

M. High Density Polyethylene Piping:

1. Join pipes, fittings, and flange connections by means of thermal butt-fusion.
2. Butt-fusion shall be performed in accordance with the pipe manufacturer's recommendations as to equipment and technique.
3. Special Precautions at Flanges: Polyethylene pipe connected to heavy fittings, manholes, and rigid structures shall be supported in such a manner that no subsequent relative movement between the polyethylene pipe at the flanged joint and the rigid structures is possible.

N. Fiberglass Reinforced Piping:

1. Cut, fabricate, and install in accordance with manufacturer's written instructions.
2. Provide manufacturer's representative for instructing workers on proper installation and jointing methods.
3. Installation shall be made by workers experienced in FRP pipe lay-up techniques.

3.5 INSTALLATION-EXPOSED PIPING

A. Piping Runs:

1. Parallel to building or column lines and perpendicular to floor, unless shown otherwise.
2. Piping upstream and downstream of flow measuring devices shall provide straight lengths as required for accurate flow measurement.

B. Supports: As specified in Section 15140, 15145, PIPING SUPPORT SYSTEMS.

C. Group piping wherever practical at common elevations; install to conserve building space and not interfere with use of space and other work.

D. Unions or Flanges: Provide at each piping connection to equipment or instrumentation on equipment side of each block valve to facilitate installation and removal.

E. Install piping so that no load or movement in excess of that stipulated by equipment manufacturer will be imposed upon equipment connection; install to allow for contraction and expansion without stressing pipe, joints, or connected equipment.

F. Piping clearance, unless otherwise shown:

1. Over Walkway and Stairs: Minimum of 7 feet 6 inches, measured from walking surface or stair tread to lowest extremity of piping system including flanges, valve bodies or mechanisms, insulation, or hanger/support systems.
2. Between Equipment or Equipment Piping and Adjacent Piping: Minimum 3 feet 0 inches, measured from equipment extremity and extremity of piping system including flanges, valve bodies or mechanisms, insulation, or hanger/support systems.
3. From Adjacent Work: Minimum 1 inch(es) from nearest extremity of completed piping system including flanges, valve bodies or mechanisms, insulation, or hanger/support systems.
4. Do not route piping in front of or to interfere with access ways, ladders, stairs, platforms, walkways, openings, doors, or windows.
5. Head room in front of openings, doors, and windows shall not be less than the top of the opening.
6. Do not install piping containing liquids or liquid vapors in transformer vaults or electrical equipment rooms.
7. Do not route piping over, around, in front of, in back of, or below electrical equipment including controls, panels, switches, terminals, boxes, or other similar electrical work.

3.6 INSTALLATION-DOUBLE WALL CONTAINMENT PIPING SYSTEM

A. Installation shall be performed by the manufacturer of the Double Wall Containment system, in accordance with ASME B31.3 for normal fluid service requirements. Install according to manufacturer's instructions.

B. All valves and equipment shall be supported independently from the pipe. Anchor valves such that the turning moment resulting from their operation will not be transmitted to the pipe.

C. Following Installation and Testing:

1. Flush clean the carrier and containment piping system.
2. Purge the annular space of moisture with clean, dry air

3.7 INSTALLATION-BURIED PIPE

A. Joints:

1. Dissimilar Buried Pipes:
   a. Provide flexible mechanical compression joints for pressure pipe.
   b. Provide concrete closure collar for gravity and low pressure (maximum 10 psi)] piping or as shown.
2. Concrete Encased or Embedded Pipe: Do not encase joints in concrete unless specifically shown.

B. Placement:

1. Keep trench dry until pipe laying and joining are completed.
2. Pipe Base and Pipe Zone: As specified in Section 02225, TRENCH BACKFILL.
3. Exercise care when lowering pipe into trench to prevent twisting or damage to pipe.
4. Measure for grade at pipe invert, not at top of pipe.
5. Excavate trench bottom and sides of ample dimensions to permit visual inspection and testing of entire flange, valve, or connection.
6. Prevent foreign material from entering pipe during placement.
7. Close and block open end of last laid pipe section when placement operations are not in progress and at close of day's work.
8. Lay pipe upgrade with bell ends pointing in direction of laying.
9. Install closure sections and adapters for gravity piping at locations where pipe laying changes direction.
10. Deflect pipe at joints for pipelines laid on a curve using unsymmetrical closure of spigot into bell. If joint deflection of standard pipe lengths will not accommodate horizontal or vertical curves in alignment, provide:
    a. Shorter pipe lengths.
    b. Special mitered joints.
    c. Standard or special fabricated bends.
11. After joint has been made, check pipe alignment and grade.
12. Place sufficient pipe zone material to secure pipe from movement before next joint is installed.
13. Prevent uplift and floating of pipe prior to backfilling.

C. PVC, CPVC, or HDPE Pipe Placement:

1. Lay pipe snaking from one side of trench to other.
2. Offset: As recommended by manufacturer for maximum temperature variation between time of solvent welding and during operation.
3. Do not lay pipe when temperature is below 40 degrees F, or above 90 degrees F when exposed to direct sunlight.
4. Shield ends to be joined from direct sunlight prior to and during the laying operation.

D. Tolerances:

1. Deflection From Horizontal Line Except PVC, CPVC, or HDPE: Maximum 2 inches.
2. Deflection From Vertical Grade: Maximum 1/4-inch.
3. Joint Deflection: Maximum of 75 percent of manufacturer's recommendation.
4. Horizontal position of pipe centerline on alignment around curves maximum variation of 1.75 feet from position shown.
5. Pipe Cover: Minimum 3 feet, unless otherwise shown.

3.8 THRUST RESTRAINT

A. Location:

1. Buried Piping: At pipeline tees, plugs, caps, bends, and other locations where unbalanced forces exist.
2. Exposed Piping: At all joints in pressure piping.

B. Thrust Ties:

1. Install where shown and as detailed.
2. Anchoring of retainer glands or thrust ties with setscrews is unacceptable.

C. Mechanical Joint Valve Restraint in Proprietary Restrained Joint Piping: Install pipe joint manufacturer's adapter gland follower and pipe end retainer, or thrust tie-rods and socket clamps.

D. Thrust Blocking:

1. Place between undisturbed ground and fitting to be anchored.
2. Quantity of Concrete: Sufficient to cover bearing area on pipe and provide required soil bearing area as shown.
3. Place blocking so that pipe and fitting joints will be accessible for repairs.
4. Place concrete in accordance with Section 03300, CAST-IN-PLACE 03301, REINFORCED CONCRETE.

3.9 SLAB, FLOOR, WALL, AND ROOF PENETRATIONS

A. Applications: As specified in Section 15120, PIPING SPECIALTIES.

B. Wall Pipe Installation:

1. Isolate embedded metallic piping from concrete reinforcement using coated pipe penetrations as specified in Section 09900, PAINTING AND PROTECTIVE COATINGS, Section 09902, PAINTING.
2. Support wall pipes securely by formwork to prevent contact with reinforcing steel and tie wires.

3.10 BRANCH CONNECTIONS

A. Do not install branch connections smaller than 1/2-inch nominal pipe size, including instrument connections, unless shown otherwise.

B. When line of lower pressure connects to a line of higher pressure, requirements of Piping Data Sheet for higher pressure rating prevails up to and including the first block valve in the line carrying the lower pressure, unless otherwise shown.

C. Threaded Pipe Tap Connections:

1. Ductile Iron Piping: Connect only with service saddle or at a tapping boss of a fitting, valve body, or equipment casting.
2. Welded Steel or Alloy Piping: Connect only with welded threadolet or half-coupling as specified on Piping Data Sheet.
3. Limitations: Threaded taps in pipe barrel are unacceptable.

3.11 VENTS AND DRAINS

A. Vents and drains at high and low points in piping required for completed system may or may not be shown. Install vents on high points and drains on low points of pipelines only where shown.

3.12 CENTERING DEVICES FOR DOUBLE WALL CONTAINMENT PIPING

A. Center and support carrier pipe within the containment pipe with centering devices. Locate not less than every 9 feet, or within 24 inches of the termination of the containment pipe on all fabricated pieces.

B. Install centering devices such that leak detection cable (if specified) will be unrestricted and such that the system maintains free drainage.

3.13 LEAK DETECTION SYSTEM FOR DOUBLE WALL CONTAINMENT PIPING

A. Install in strict accordance with the system manufacturer's instructions and recommendations.

3.14 CLEANING

A. Following assembly and testing, and prior to disinfection and final acceptance, flush pipelines (except as stated below) with water at 2.5 fps minimum flushing velocity until foreign matter is removed.

B. Blow clean of loose debris plant process air.

C. Immediately after cleaning dry chlorine gas or liquid, service piping, dry to minus 40 degrees F dew point with dry compressed instrument air or compressed commercial grade nitrogen.

D. If impractical to flush large diameter pipe at 2.5 fps or blow at 4,000 fpm velocity, clean in-place from inside by brushing and sweeping, then flush or blow line at lower velocity.

E. Insert cone strainers in flushing connections to attached equipment and leave in-place until cleaning is complete.

F. Remove accumulated debris through drains 2 inches and larger or by removing spools and valves from piping.

3.15 INSULATION

A. See Section 15260, PIPE INSULATION.

3.16 DISINFECTION

A. See Section 02683, DISINFECTION OF WATER SYSTEMS

3.17 FIELD FINISHING

A. Notify ENGINEER at least 3 days prior to start of any surface preparation or coating application work.

B. As specified in Section 09900, PAINTING AND PROTECTIVE COATINGS, 09902, PAINTING

3.18 PIPE IDENTIFICATION

A. See Section 02225, TRENCH BACKFILL.

3.19 FIELD QUALITY CONTROL

A. Pressure Leakage Testing: As specified in Section 15992, PIPING LEAKAGE TESTING.

B. Minimum Duties of Welding Inspector:

1. Job material verification and storage.
2. Qualification of welders.
3. Certify conformance with approved welding procedures.
4. Maintenance of records and preparation of reports in a timely manner.
5. Notification to ENGINEER of unsatisfactory weld performance within 24 hours of weld test failure.

C. Required Weld Examinations:

1. Perform examinations in accordance with the Piping Code for Category M fluids, except that percent of the circumferential butt welds shall be random radiographed.
2. Perform examinations for every pipe thickness and for each welding procedure, progressively, for all piping covered by this section.
3. Examine at least one of each type and position of weld made by each welder or welding operator.
4. For each weld found to be *defective* under the acceptance standards or limitations on imperfections contained in the applicable Piping Code, examine two additional welds made by the same welder that produced the *defective* weld. Such additional examinations are in addition to the minimum required above. Examine, progressively, two additional welds for each tracer examination found to be unsatisfactory.

D. Test the leak detection system in accordance with the system manufacturer's instructions and recommendations to verify proper operation.

3.20 MANUFACTURER'S SERVICES

A. Provide manufacturer's representative at site in accordance with Section 01640, MANUFACTURERS' SERVICES, to assist with the unloading of the double wall containment piping system, system tests, containment pipe joint closure, installation and testing of the leak detection system, and training of OWNER's personnel in the operation and maintenance of the leak detection system. Manufacturer's representative shall complete a Manufacturer's Certificate of

Proper Installation. Inspection and examination practices shall be according to ASME B31.3 for normal fluid service.

END OF SECTION

SECTION 15060-13 COPPER AND COPPER ALLOY PIPE, TUBING, AND FITTINGS	
Item	**Description**
Pipe	Oxygen Service: Red brass, seamless, standard wall thickness, conforming to ASTM B43.
Tubing	Seamless, conforming to ASTM B88 Rev A as follows: Oxygen service.....Type K, hard drawn No. 1 water (buried) .....Type K, soft or hard temper No. 1 water (exposed).....Type L, hard drawn Domestic hot water.....Type L, hard drawn Compressed air service.....Type L, hard drawn Laboratory air service.....Type L, hard drawn Laboratory vacuum service .....Type L, hard drawn Refrigerant service .....Type L, hard drawn P-Trap priming service .....Type L, soft temper Sample line service .....Type L, hard drawn Laboratory gas service .....Type L, hard drawn
Fittings	Oxygen Service: Bronze, screwed, 250-pound conforming to ASTM B62, dimensions conforming to ANSI B16.15 or wrought copper, socket joint, conforming to ASTM B75, dimensions conforming to ANSI B16.22. Other Services: Commercially pure wrought copper, socket joint, conforming to ASTM B75, dimensions conforming to ANSI B16.22.
Flanges	Oxygen Service: Bronze, screwed, conforming to ASTM B61, faced and drilled 150-pound ANSI B16.24 standard. Other Services: Commercially pure wrought copper, socket joint, conforming to ASTM B75, faced and drilled 150-pound ANSI B16.24 standard.
Bolting	Oxygen Service: ASTM A320/A320M, stainless steel Type 304, Grade B8 bolts with copper silicon hex nuts conforming to ASTM B98 Grade A hard. Other Services: ASTM A307, carbon steel, Grade A hex head bolts and ASTM A563 Grade A hex head nuts.
Gaskets	1/16-inch thick non-asbestos compression type, full face, Cranite, Johns-Manville.
Solder	Oxygen Service: Silver brazing alloy, 15 percent silver content, 1185 degrees F to 1300 degrees F melting range, conforming to AWS A5.8. Other Services: 95-5 wire solder (95 percent tin, 5 percent antimony), conforming to ASTM B32 Grade 95TA. Do not use cored solder.

END OF SECTION

SECTION 15410
PLUMBING

PART 1 - GENERAL

1.01 DESCRIPTION:

A. Furnish and install fixtures, equipment and piping for cold and hot water, gas, vacuum, compressed air, drain and waste systems.

1.02 QUALITY ASSURANCE:

A. Comply with State and local codes and requirements of Regulatory Agencies.

1.03 RELATED WORK - REFERENCES:

A. All earth and rock excavation, backfill, concrete masonry, concrete reinforcement, and construction joints required for plumbing work shall conform to the requirements specified under the applicable sections of the specifications.

B. Section 03200: Concrete Reinforcement

C. Section 03251: Construction and Expansion Joints

D. Section 04200: Unit Masonry and Accessories

E. Section 09940: Shop Painting

F. Section 09941: Field Painting

G. Section 15101: Valves, Gates, Hydrants and Appurtenances

H. Section 15804: Ventilating

I. Section 15806: Heating, Ventilating and Air Conditioning

J. Section 16050: Electrical Work - General

K. Section 16900: Electrical Controls and Miscellaneous Electrical Equipment

1.04 REQUIREMENTS OF SECTIONS 01000 AND 01005:

A. In regard to:

1. Submittal of manufacturer's specifications, catalog data, descriptive matter, illustrations, diagrams, etc., including complete motor data.

2. Nameplates

3. Foundations, installations and grouting

4. Operating and maintenance instructions and parts lists.
5. Lubricants

6. Special tools

7. Bolts, anchor bolts and nuts

8. Concrete inserts

9. Sleeves

10. Electrical motors

11. Voltage rating of motors

12. Equipment drive guards

PART 2 - PRODUCTS

2.01 PIPE AND FITTINGS:

A. Domestic water, sealwater and service water:

1. Maximum 2-1/2 in.: exposed, Type L drawn copper tubing, solder copper or brass fittings; buried, Type K annealed copper tubing, solder or flare joints.

2. Minimum 3 in.: cement-lined cast or ductile iron pipe and fittings, Section 02615.

B. Drainage; soil, waste, roof and vent:

1. Maximum 2-1/2 in.: galvanized steel pipe, galvanized screwed cast-iron drainage fittings; galvanized malleable iron fittings for vent.

2. Minimum 3 in.: extra-heavy cast iron soil pipe and fittings, caulked joints; coal-tar pitch coated pipe buried or concealed. For above ground existing hazardous areas and as alternate joints: push-on-joint pipe or hubless-joint pipe, standard weight.

3. Acid-resistant waste and vent, extra heavy cast iron soil pipe with minimum 12 percent silicon, hub and spigot type, caulked joints or where permitted by code, joints hubless type with teflon sleeve and stainless steel sleeve and clamp; Schedule 40 flame-retardant polypropylene ASTM D 4101 pipe with heat fusion drainage pattern fittings alternate for horizontal exposed branch from equipment to stack.

4. Chemical-resistant waste and vent, Schedule 40 flame retardant polypropylene pipe ASTM D 4101 with heat fusion drainage pattern fittings.

5. Equipment drainage, Schedule 40 galvanized steel pipe, galvanized screwed malleable iron fittings.

E. Gas piping:

1. Maximum 1-1/2 in.: standard black steel pipe, threaded malleable iron fittings.

2. Minimum 2 in.: standard black steel pipe, flanged cast iron or forged steel welding fittings.

3. Buried pipe and fittings: coated with factory-applied polyethylene bonded with hot application of elastic adhesive, manufactured by Pipe Line Service Corp., Franklin Park, IL, Republic Steel Co., Cleveland, OH, General Steel Industries, St. Louis, MO., or acceptable equivalent.

E. Miscellaneous piping:

1. Hydrogen, helium, acetylene, compressed air, vacuum: standard black steel pipe, screwed malleable iron fittings.

2. Nitrous oxide: Type L rigid copper tube, solder copper or brass fittings.

3. Demineralized water, de-ionized water, distilled water: polyvinylchloride (PVC) Type 1, Grade 1, Schedule 80, with solvent welded Schedule 40 fittings.

2.02 INSULATION:

A. Section 15052

B. Insulate piping systems:

1. Hot water (exception: short chrome-plated connections to fixtures)

2.03 PLUMBING - FIXTURES AND ACCESSORIES:

A. Manufacturers listed in schedule; acceptable equivalent products considered.

B. Provide fixture with valves, vacuum breakers, air gaps, faucets, flush valves, wastes, traps, wall plates and escutcheons; stamped index on faucet handles.

C. Exposed metal parts: heavy chrome-plated brass, polished surface.

D. Pipe connections: minimum size listed in fixture-connection schedule.

F. Schedule of Fixtures - Connection Sizes:

SCHEDULE OF CONNECTION SIZES

Fixture	Waste (inches)	Supply (inches)
Water closet	4	1 (flush valve)
Urinal	2	3/4 (flush valve)
Lavatory	1-1/2	3/8
Service sink	3	1/2
Shower	2	1/2

Electric water cooler	1-1/2	3/8
Sink, lunchroom	1-1/2	1/2
Sink, laboratory	1-1/2	1/2
Water still	-	1/2
Glassware washer	3/4 air gap	1/2
Eyewash, laboratory	-	1/2
Emergency shower	-	1
Emergency eyewash and shower unit	-	1-1/2

2.04 EMERGENCY SHOWER:

A. Speakman Co., Wilmington, DE, Model SE-206CP; Western Drinking Fountains Inc., San Leandro, CA, Model 824-VCP; Haws Drinking Faucet Co., Berkeley, CA, Model 8123VPCP; or acceptable equivalent.

B. Manual deluge-type, self-closing valve, chain and ring; rough nickel-plate finish, chrome finish or chrome sleeve on exposed drop pipe.

2.05 TOILET ACCESSORIES:

A. Paper Holders:

1. Bobrick Washroom Equipment, Bradley Washfountain Co., Menomonee Falls, WI, Model 505; Charles Parker Co., Meriden, CT, Model 964; Watrous Inc., Bensenville, IL, Model W-1557, or acceptable equivalent.

2. Bobrick Washroom Equipment surface mounted, die-cast zinc, copper-nickel-polished chrome plated, single roll toilet tissue holder; provide one for each water closet.

B. Clothes Hooks:

1. Bobrick Washroom Equipment, Bradley Washfountain Co., Menomonee Falls, WI, Model 915; Charles Parker Co., Meriden, CT, Model G; Bobrick Washroom Equipment Inc., Ballston Bake, NY, No. B212; or acceptable equivalent.

2. Bobrick Washroom Equipment surface mounted, forged or cast brass, nickel-plated, polished chrome, rubber bumper; one for each stall door.

C. Mirror-Shelf Combination: Bobrick Washroom Equipment, Bradley Washfountain Co., Menomonee Falls, WI, Model 705; Charles Parker Co., Meriden, CT, Model 53020-SS; Watrous Inc., Bensenville, IL, Model W-1200-S; or acceptable equivalent. 1/4-in. polished plate glass mirror, 24-in. by 30-in. electrolytically copper plated, 10-year guarantee against

silver spoilage; edges and back fully padded,
20-gage galvanized steel back plate, 3/4-in. by 3/4-in. 18-gage stainless steel angle frame; 18-gage satin-finish stainless steel shelf, end reinforcing brackets, frame and shelf corners welded and polished, concealed mounting plate and theft-proof mounting set-screws, one for each lavatory.

D. Soap Dish:

1. Bobrick Washroom Equipment, Bradley Washfountain Co., Menomonee Falls, WI, Model 901D; Charles Parker Co., Meriden, CT, Model 2210; Watrous Inc., Bensenville, IL, Model W-1665; or acceptable equivalent.

2. Bobrick Washroom Equipment surface mounted, forged or cast brass, nickel plated, polished chrome, drain holes; one for each shower stall.

E. Shower Curtain Rod and Curtain:

1. Bobrick Washroom Equipment, Bradley Washfountain Co., Menomonee Falls, WI, Model 953-HD, -DC and-CH; Charles Parker Co., Meriden, CT, Model 628-HD with C.P. brass hooks; Watrous Inc., Bensenville, IL, Model No. W-1681-2, or acceptable equivalent.

2. Bobrick Washroom Equipment, 1 1/4-in., 18-gage, satin finish stainless steel rod, 3-in. flange, 1/2-in. deep socket; chrome plated steel spring wire curtain hooks; 8-oz. white duck curtain; one for each shower stall.

F. Paper Towel Dispenser-Disposal Unit:

1. Bobrick Washroom Equipment, Bradley Washfountain Co., Menomonee Falls, WI, Model 225; Charles Parker Co., Meriden, CT, Model 600; Watrous Inc., Bensenville, IL, Model W-1051; or acceptable equivalent.

2. Recessed-type for flush wall mounting, stainless steel cabinet and hinged door with key-lock; towel compartment on top, waste compartment below with removable galvanized steel waste bin; one for each toilet and locker room.

G. Paper Towel Dispenser:

1. Bobrick Washroom Equipment, Bradley Washfountain Co., Menomonee Falls, WI, Model 250; Charles Parker Co., Meriden, CT, Model 6945M; Watrous Inc., Bensenville, IL, Model W-1103-C; or acceptable equivalent.

2. Bobrick Washroom Equipment surface-mounted type, 22-gage, satin finish stainless steel, key-lock; one for each janitor closet, laboratory, lunchroom and training room.

H. Feminine Napkin Disposal Unit:

1. Charles Parker Co., Meriden, CT, Model 606SM; Watrous Inc., Bensenville, IL, Model W-1079; Bobrick Washroom Equipment Inc., Ballston Lake, NY, Model B-270; or acceptable equivalent.
2. Bobrick Washroom Equipment surface-mounted type, 22-gage stainless steel, self-closing hinged top, front-hinged bottom compartment, key operated waterproof disposable liners; one for each women's water closet stall.

I. Soap Dispenser:

1. Bobrick Washroom Equipment, Bradley Washfountain Co., Menomonee Falls, WI, Model 6561; Charles Parker Co., Meriden, CT, Model 20L; Watrous Inc., Bensenville, IL, Model W-832; or acceptable equivalent.

2. Wall-mounted type, tamperproof mounting, removable 40-oz. reservoir, integral plunger-type valve, metal parts chromeplated; one for each lavatory.

J. Waste Receptacle:

1. Bobrick Washroom Equipment, Bennett Mfg. Co., Alden, NY; Mipro Metal Products Co., South San Francisco, CA; United Metal Cabinet Corp., Pottsville, PA, or acceptable equivalent.

2. Bobrick Washroom Equipment swinging-cover type, 16-1/2-in. by 16-1/2-in. by 35-in., white enameled steel, removable canvas bag; one for each janitor closet.

3. Bobrick Washroom Equipment waste basket type, 26-qt., round white enameled steel; one for each lunchroom, laboratory and training room.

K. Grab Bars:

1. Bobrick Washroom Equipment, Bradley Wash Fountain Co., Menomonee Falls, WI; Charles Parker Co., Meriden, CT; Watrous Inc., Pensenville, IL; or acceptable equivalent.

2. Bobrick Washroom Equipment satin finish, 1-1/2-in. diameter, 0.049-in. minimum thickness, Type 032 stainless steel, wall or floor flanges, mountings suitable for concrete floor, masonry walls, and metal toilet partitions. One for each handicapped toilet.

2.06 ACCESS DOORS:

A. 14-gage steel frame and door, invisible hinge, cam lock fastenings, 2-in. wide expanded metal lath perimeter wings, plaster walls and ceilings, gray metal primer doors and frames.

2.07 DRAINS:

A. Jay R. Smith Engineering Products, Josam Mfg. Co., Michigan City, IN; Zurn Industries, Inc., Erie, PA; Neenah Foundry Co., Neenah, WI; Wade, Division of Tyler Pipe & Foundry Co., Tyler, TX; and Flockhart Foundry Co., Newark, NJ; Orion Industries Inc., Kansas City, KA; Enfield Industrial Corp., Melrose Park, IL; R.G. Sloar Mfg. Co., Woodland Hills, CA.

B. Cast-iron bodies; polypropylene bodies; flashing clamp, 16 oz sheet copper flashing; non-puncture flashing clamp, integral stop and deck clamp type roof drains; 4-lb. sheet lead flashing.

2.08 CLEANOUTS AND TRAPS:

A. Soil pipe fittings, ferrule fitted with threaded solid cast-brass plug.

1. Plug below floor covered with brass access cover.

B. Galvanized cast-iron drainage fittings, threaded solid cast-brass plug.

C. Acid resisting soil pipe fittings, ferrule fitted with threaded countersunk plug of acid resisting plastic material.

2.09 WATER METER:

A. Manufactured by Hersey Products Inc., Dedham, MA; Neptune Meter Co., Long Island City, NY; Rockwell Mfg, Co., Pittsburgh, PA; or acceptable equivalent.

B. Maximum size: 2-in.; positive displacement, disk-type, bronze body, bronze internals, straight-reading dials.

C. Minimum size: 2-1/2-in.; flange ends, bronze case, magnetic-drive compound type, current mainline meter, positive displacement by-pass meter, straight reading dials.

2.10 ELECTRIC WATER HEATERS:

A. Self contained, free standing storage unit, 300psi test pressure, glass-lined welded steel tank, immersion or external, readily removable heating elements, adjustable temperature control, pressure-temperature relief valve, safety cutout device, vacuum breaker; water, relief and drain tapped bosses; 2-in. glass fiber insulation, enameled sheet metal jacket.

SECTION 16111
CONDUIT

PART 1 GENERAL

1.01 SECTION INCLUDES

A. Metal conduit.

B. Flexible metal conduit.

C. Liquidtight flexible metal conduit.

D. Electrical metallic tubing.

E. Nonmetal conduit.

F. Electrical nonmetallic tubing.

G. Flexible nonmetallic conduit.

H. Fittings and conduit bodies.

1.02 RELATED SECTIONS

A. Section 07: Roofing penetrations.

B. Section 16118 - Underground Duct Bank.

C. Section 16130 - Boxes.

D. Section 16170 - Grounding and Bonding.

E. Section 16190 - Supporting Devices.

F. Section 16195 - Electrical Identification.

1.03 REFERENCES

A. ANSI C80.1 - Rigid Steel Conduit, Zinc Coated.

B. ANSI C80.3 - Electrical Metallic Tubing, Zinc Coated.

C. ANSI/NEMA FB 1 - Fittings, Cast Metal Boxes, and Conduit Bodies for Conduit and Cable Assemblies.

D. ANSI/NFPA 70 - National Electrical Code.

E. NECA "Standard of Installation."

F. NEMA TC 2 - Electrical Plastic Tubing (EPT) and Conduit (EPC-40 and EPC-80).

G. NEMA TC 3 - PVC Fittings for Use with Rigid PVC Conduit and Tubing.

1.04 DESIGN REQUIREMENTS

A. Conduit Size: ANSI/NFPA 70.

1.05 SUBMITTALS

A. Submit under provisions of Section [01300].

B. Product Data: Provide for metallic conduit, flexible metal conduit, liquidtight flexible metal conduit, metallic tubing, nonmetallic conduit, flexible nonmetallic conduit, nonmetallic tubing, fittings, conduit bodies receptacles, switches, lighthing fixtures, ceiling fan, lighthing distribution panels, main distribution panel, and meter base.

1.06 PROJECT RECORD DOCUMENTS

A. Submit under provisions of Section 01700.

B. Accurately record actual routing of conduits.

1.07 REGULATORY REQUIREMENTS

A. Conform to requirements of ANSI/NFPA 70.

B. Furnish products listed and classified by Underwriters Laboratories, Inc. as suitable for purpose specified and shown.

1.08 DELIVERY, STORAGE, AND HANDLING

A. Deliver, store, protect, and handle Products to site under provisions of Section 01600.

B. Accept conduit on site. Inspect for damage.

C. Protect conduit from corrosion and entrance of debris by storing above grade. Provide appropriate covering.

D. Protect PVC conduit from sunlight.

1.10 PROJECT CONDITIONS

A. Verify that field measurements are as shown on Drawings.

B. Verify routing and termination locations of conduit prior to rough-in.

C. Conduit routing is shown on Drawings in approximate locations unless dimensioned. Route as required to complete wiring system.

PART 2 PRODUCTS

2.01 CONDUIT REQUIREMENTS

A. Minimum Size: 3/4 inch (19 mm) unless otherwise specified.

B. Underground Installations:
   1. Use PVC SCH 40 conduit.
   2. In or Under Slab on Grade: Use thickwall nonmetallic conduit.
   3. Minimum Size: 3/4 inch (19 mm).

C. Outdoor Locations, Above Grade: Use rigid metallic conduit.

D. In Slab Above Grade:
   1. Use PVC SCH 40 conduit.
   2. Maximum Size Conduit in Slab: 3/4 inch 19 mm.

E. Wet and Damp Locations:
   1. Concealed: Use PVC SCH 40 conduit.
   2. Exposed: Use rigid metallic conduit.

F. Dry Locations:
   1. Concealed: Use PVC SCH 40 conduit.
   2. Exposed: Use rigid metallic conduit.

2.02 METAL CONDUIT

A. Manufacturers:

   1. Submit.

B. Rigid Steel Conduit: ANSI C80.1.

C. Fittings and Conduit Bodies: ANSI/NEMA FB 1; material to match conduit, aluminum fittings may be used with steel conduit.

2.03 FLEXIBLE METAL CONDUIT

A. Manufacturers:

   1. Submit.

B. Description: Interlocked steel construction.

C. Fittings: ANSI/NEMA FB 1.

2.04 LIQUIDTIGHT FLEXIBLE METAL CONDUIT

A. Manufacturers:

   1. Submit.

B. Fittings: ANSI/NEMA FB 1.

2.05 NONMETALLIC CONDUIT

A. Manufacturers:

1. Submit.

B. Description: NEMA TC 2; Schedule (40) PVC.

C. Fittings and Conduit Bodies: NEMA TC 3.

PART 3 EXECUTION

3.01 INSTALLATION

A. Install conduit in accordance with NECA "Standard of Installation."

B. Install nonmetallic conduit in accordance with manufacturer's instructions.

C. Arrange supports to prevent misalignment during wiring installation.

D. Support conduit using coated steel or malleable iron straps, lay-in adjustable hangers, clevis hangers, and split hangers.

E. Group related conduits; support using conduit rack. Construct rack using steel channel [; provide space on each for 25 percent additional conduits].

F. Fasten conduit supports to building structure and surfaces under provisions of Section 16190.

G. Do not support conduits with wire or perforated pipe straps. Remove wire used for temporary supports

H. Do not attach conduits to ceiling support wires.

I. Arrange conduit to maintain headroom and present neat appearance.

J. Route exposed conduit parallel and perpendicular to walls.

K. Route conduit installed above accessible ceilings parallel and perpendicular to walls.

L. Route conduit in and under slab from point-to-point.

M. Do not cross conduits in slab.

N. Maintain adequate clearance between conduit and piping.

O. Maintain 12 inch (300 mm) clearance between conduit and surfaces with temperatures exceeding 104 degrees F (40 degrees C).

P. Cut conduit square using saw or pipecutter; de-burr cut ends.

Q. Bring conduit to shoulder of fittings; fasten securely.

R. Join nonmetallic conduit using cement as recommended by manufacturer. Wipe nonmetallic conduit dry and clean before joining. Apply full even coat of cement to entire area inserted in fitting. Allow joint to cure for 20 minutes, minimum.

S. Use conduit hubs or sealing locknuts to fasten conduit to sheet metal boxes in damp and wet locations and to cast boxes.

T. Install no more than equivalent of three 90-degree bends between boxes. Use conduit bodies to make sharp changes in direction, as around beams. Use hydraulic one-shot bender to fabricate factory elbows for bends in metal conduit larger than 2 inch (50 mm) size.

U. Avoid moisture traps; provide junction box with drain fitting at low points in conduit system.

V. Provide suitable fittings to accommodate expansion and deflection where conduit crosses seismic and expansion joints.

W. Provide suitable pull string in each empty conduit except sleeves and nipples.

X. Use suitable caps to protect installed conduit against entrance of dirt and moisture.

Y. Ground and bond conduit under provisions of Section 16170.

Z. Identify conduit under provisions of Section 16195.

3.02 INTERFACE WITH OTHER PRODUCTS

A. Install conduit to preserve fire resistance rating of partitions and other elements, using materials and methods under the provisions of Section 07270.

B. Route conduit through roof openings for piping and ductwork or through suitable roof jack with pitch pocket. Coordinate location with roofing installation.

END OF SECTION

SECTION 16123
BUILDING WIRE AND CABLE

PART 1 GENERAL

1.1 SECTION INCLUDES

A. Building wire and cable.

B. Nonmetallic-sheathed cable.

C. Direct burial cable.

D. Service entrance cable.

E. Armored cable.

F. Metal clad cable.

G. Wiring connectors and connections.

1.2 RELATED SECTIONS

A. Section 02225 - Trenching: Trenching and backfilling for direct burial cable installation.

B. Section 16195 - Electrical Identification.

1.3 REFERENCES

A. Section 01400 - Quality Control: 01090 - Reference Standards: Requirements for references and standards.

B. NECA Standard of Installation (National Electrical Contractors Association).

C. NETA ATS - Acceptance Testing Specifications for Electrical Power Distribution Equipment and Systems (International Electrical Testing Association).

D. NFPA 70 - National Electrical Code.

1.4 SUBMITTALS FOR REVIEW

A. Section 01300 - Submittals: Procedures for submittals.

B. Product Data: Provide for each cable assembly type.

1.5 SUBMITTALS FOR INFORMATION

A. Section 01300 - Submittals: Procedures for submittals.

B. Test Reports: Indicate procedures and values obtained.

C. Manufacturer's Installation Instructions: Indicate application conditions and limitations of use stipulated by product testing agency specified under Regulatory Requirements.

1.6 SUBMITTALS AT PROJECT CLOSEOUT

A. Section 01700 - Contract Closeout: 01730 - Operation and Maintenance Data: 01740 - Warranties: 01740 - Bonds: Procedures for submittals.

B. Project Record Documents: Record actual locations of components and circuits.

1.7 QUALIFICATIONS

A. Manufacturer: Company specializing in manufacturing products specified in this Section with minimum three years experience.

1.8 REGULATORY REQUIREMENTS

A. Conform to NFPA 70.

B. Furnish products listed and classified by Underwriters Laboratories Inc., as suitable for the purpose specified and indicated.

1.9 PROJECT CONDITIONS

A. Section 01039 - Coordination and Meetings.

B. Verify that field measurements are as indicated.

C. Conductor sizes are based on copper.

D. Aluminum conductor will not be allowed.

E. Wire and cable routing indicated is approximate unless dimensioned.

1.10 COORDINATION

A. Coordinate Work under provisions of Section [01039].

B. Where wire and cable destination is indicated and routing is not shown, determine exact routing and lengths required.

PART 2 PRODUCTS

2.1 BUILDING WIRE

A. Manufacturers:
   1. Conducen.
   2. Essex.
   3. Phelps Dodge.

B. Description: Single conductor insulated wire.

C. Conductor: Copper.

D. Insulation Voltage Rating: 600 volts.

E. Insulation: NFPA 70, Type THHN/THWN.

2.2 NONMETALLIC-SHEATHED CABLE

A. Manufacturers:
   A. Manufacturers:
   1. Conducen.
   2. Essex.
   3. Phelps Dodge.

B. Description: NFPA 70, Type [NMC] [NM].

C. Conductor: Copper.

D. Insulation Voltage Rating: 600 volts.

PART 3 EXECUTION

3.1 EXAMINATION

A. Section 01039 - Coordination and Meetings: Verification of existing conditions before starting work.

B. Verify that interior of building has been protected from weather.

C. Verify that mechanical work likely to damage wire and cable has been completed.

D. Verify that raceway installation is complete and supported.

3.2 PREPARATION

A. Completely and thoroughly swab raceway before installing wire.

3.3 WIRING METHODS

A. Concealed Dry Interior Locations: Use only building wire type THHN/THWN insulation in raceway.

B. Exposed Dry Interior Locations: Use only [building wire type THHN/THWN insulation in raceway.

C. Wet or Damp Interior Locations: Use only building wire type THHN/THWN insulation in raceway.

D. Exterior Locations: Use only building wire type THHN/THWN insulation in raceway or metal clad cable.

E. Underground Installations: Use only building wire type RHH insulation in raceway.

F. Use wiring methods indicated.

3.4 INSTALLATION

A. Section 01400 - Quality Control: Manufacturer's instructions.

B. Route wire and cable as required to meet Project Conditions.

C. Install cable in accordance with the NECA "Standard of Installation."

D. Use stranded conductor for feeders and branch circuits.

E. Use stranded conductors for control circuits.

F. Use conductor not smaller than 12 AWG for power and lighting circuits.

G. Use conductor not smaller than 16 AWG for control circuits.

H. Use 10 AWG conductors for 20 ampere, 120 volt branch circuits longer 100 feet 33 m.

I. Pull all conductors into raceway at same time.

J. Use suitable wire pulling lubricant for building wire 12 AWG and larger.

K. Protect exposed cable from damage.

L. Use suitable cable fittings and connectors.

M. Neatly train and lace wiring inside boxes, equipment, and panel boards.

N. Clean conductor surfaces before installing lugs and connectors.

O. Make splices, taps, and terminations to carry full ampacity of conductors with no perceptible temperature rise.

P. Use suitable reducing connectors or mechanical connector adapters for connecting aluminum conductors to copper conductors.

Q. Use split bolt connectors for copper conductor splices and taps, 6 AWG and larger. Tape uninsulated conductors and connector with electrical tape to 150 percent of insulation rating of conductor.

R. Use solderless pressure connectors with insulating covers for copper conductor splices and taps, 8 AWG and smaller.

S. Use insulated spring wire connectors with plastic caps for copper conductor splices and taps, 10 AWG and smaller.

T. Trench and backfill for direct burial cable installation as specified in Section 02225. Install warning tape along entire length of direct burial cable, within 3 inches (75 mm) of grade.

U. Identify [and color code] wire and cable under provisions of Section 16195. Identify each conductor with its circuit number or other designation indicated.

3.5 FIELD QUALITY CONTROL

A. Section 01400 - Quality Control 01650 - Starting of Systems: Field inspection, testing, adjusting.

B. Inspect and test in accordance with NETA ATS, except Section 4.

C. Perform inspections and tests listed in NETA ATS, Section 7.3.1.

END OF SECTION

SECTION 16130
BOXES

PART 1 GENERAL

1.1 SECTION INCLUDES

A. Wall and ceiling outlet boxes.

B. Floor boxes.

C. Pull and junction boxes.

1.2 RELATED SECTIONS

A. Section 16140 - Wiring Devices: Wall plates in finished areas.

1.3 REFERENCES

A. NECA - Standard of Installation.

B. NEMA FB 1 - Fittings and Supports for Conduit and Cable Assemblies.

C. NEMA OS 1 - Sheet-steel Outlet Boxes, Device Boxes, Covers, and Box Supports.

D. NEMA OS 2 - Nonmetallic Outlet Boxes, Device Boxes, Covers and Box Supports.

E. NEMA 250 - Enclosures for Electrical Equipment (1000 Volts Maximum).

F. NFPA 70 - National Electrical Code.

1.4 SUBMITTALS FOR CLOSEOUT

A. Section 01700 - Contract Closeout: 01730 - Operation and Maintenance Data: Submittals for Project closeout.

B. Record actual locations and mounting heights of outlet, pull, and junction boxes on project record documents.

1.5 REGULATORY REQUIREMENTS

A. Conform to requirements of NFPA 70.

B. Provide Products listed and classified by Underwriters Laboratories, Inc., as suitable for the purpose specified and indicated.

PART 2 PRODUCTS

2.1 OUTLET BOXES

A. Nonmetallic Outlet Boxes: NEMA OS 2.

B. Service Fittings: As specified in Section 16140.

2.2 PULL AND JUNCTION BOXES

A. Plastic Boxes: NEMA OS, PVC, Krydon.

B. Fiberglass Handholes: Die molded glass fiber hand holes:
1. Cable Entrance: Pre-cut 6 inch x 6 inch (150mm x 150mm) cable entrance at center bottom of each side.
2. Cover: Glass fiber weatherproof cover with nonskid finish.

PART 3 EXECUTION

3.1 INSTALLATION

A. Install boxes in accordance with NECA "Standard of Installation."

B. Install in locations as shown on Drawings, and as required for splices, taps, wire pulling, equipment connections and compliance with regulatory requirements.

C. Set wall mounted boxes at elevations to accommodate mounting heights indicated.

D. Electrical boxes are shown on Drawings in approximate locations unless dimensioned.

E. Orient boxes to accommodate wiring devices oriented as specified in Section 16140.

F. Maintain headroom and present neat mechanical appearance.

G. Install pull boxes and junction boxes above accessible ceilings and in unfinished areas only.

H. Inaccessible Ceiling Areas: Install outlet and junction boxes no more than 6 inches (150 mm) from ceiling access panel or from removable recessed luminaire.

I. Install boxes to preserve fire resistance rating of partitions and other elements, using materials and methods specified in Section 07270.

J. Coordinate mounting heights and locations of outlets mounted above counters, benches, and backsplashes.

K. Locate outlet boxes to allow luminaires positioned as shown on reflected ceiling plan.

L. Align adjacent wall mounted outlet boxes for switches, thermostats, and similar devices.

M. Use flush mounting outlet box in finished areas.

N. Locate flush mounting box in masonry wall to require cutting of masonry unit corner only. Coordinate masonry cutting to achieve neat opening.

O. Do not install flush mounting box back-to-back in walls; provide minimum 6 inches (150 mm) separation. Provide minimum 24 inches (600mm) separation in acoustic rated walls.

P. Secure flush mounting box to interior wall and partition studs. Accurately position to allow for surface finish thickness.

Q. Use stamped steel bridges to fasten flush mounting outlet box between studs.

R. Install flush mounting box without damaging wall insulation or reducing its effectiveness.

S. Use adjustable steel channel fasteners for hung ceiling outlet box.

T. Do not fasten boxes to ceiling support wires.

U. Support boxes independently of conduit.

V. Use gang box where more than one device is mounted together. Do not use sectional box.

W. Use gang box with plaster ring for single device outlets.

X. Use cast outlet box in exterior locations [exposed to the weather] and wet locations.

Y. Use cast floor boxes for installations in slab on grade; formed steel boxes are acceptable for other installations.

Z. Set floor boxes level.

AA. Large Pull Boxes: Use hinged enclosure in interior dry locations, surface-mounted cast metal box in other locations.

3.2 INTERFACE WITH OTHER PRODUCTS

A. Coordinate installation of outlet box for equipment connected under Section 16180.

3.3 ADJUSTING

A. Section 01700 - Contract Closeout; 01650 - Testing, Adjusting, and Balancing: Adjusting installed work.

B. Adjust floor box flush with finish flooring material.

C. Adjust flush-mounting outlets to make front flush with finished wall material.

D. Install knockout closures in unused box openings.

3.4 CLEANING

A. Section 01700 - Contract Closeout: Cleaning installed work.

B. Clean interior of boxes to remove dust, debris, and other material.

C. Clean exposed surfaces and restore finish.

END OF SECTION

SECTION 16140
WIRING DEVICES

PART 1 GENERAL

1.1 SECTION INCLUDES

A. Wall switches.

B. Wall dimmers.

C. Receptacles.

D. Device plates and decorative box covers.

E. Poke-through service fittings.

1.2 RELATED SECTIONS

A. Section 16130 - Boxes.

1.3 REFERENCES

A. NECA - Standard of Installation.

B. NEMA WD 1 - General Requirements for Wiring Devices.

C. NEMA WD 6 - Wiring Device -- Dimensional Requirements.

D. NFPA 70 - National Electrical Code.

1.4 SUBMITTALS FOR REVIEW

A. Section 01300 - Submittals: Procedures for submittals.

B. Product Data: Provide manufacturer's catalog information showing dimensions, colors, and configurations.

1.5 SUBMITTALS FOR INFORMATION

A. Section 01300 - Submittals: Submittals for information.

B. Submit manufacturer's installation instructions.

1.6 QUALIFICATIONS

A. Manufacturer: Company specializing in manufacturing the Products specified in this section with minimum three years experience.

1.7 REGULATORY REQUIREMENTS

A. Conform to requirements of NFPA 70.

B. Provide Products listed and classified by Underwriters Laboratories, Inc., as suitable for the purpose specified and indicated.

PART 2 PRODUCTS

2.1 WALL SWITCHES

A. Single Pole Switch:
1. Westinghouse
2. Bryant
3. Hubell
4. Levitton

B. Double Pole Switch:
1. Westinghouse
2. Bryant
3. Hubell
4. Levitton

C. Three-way Switch:
1. Westinghouse
2. Bryant
3. Hubell
4. Levitton

D. Four-way Switch:
1. Westinghouse
2. Bryant
3. Hubell
4. Levitton

E. Color: Ivory.

2.1 WALL SWITCHES

A. Description: NEMA WD 1 General-Duty, AC only general-use snap switch.

B. Body and Handle: Ivory plastic with toggle handle.

C. Ratings:
1. Voltage: 120 volts, AC.
2. Current: 15 amperes.

2.2 WALL DIMMERS

A. Manufacturers:

1. Westinghouse
2. Bryant
3. Hubell
4. Levitton

B. Description: NEMA WD 1; Semiconductor dimmer for incandescent lamps, Type as indicated [on drawings] [in schedule].

C. Body and Handle: Ivory plastic with linear slide.

D. Voltage: 120 volts.

E. Color: Ivory.

2.3 RECEPTACLES

A. Manufacturers:
1. Westinghouse
2. Bryant
3. Hubell
4. Levitton

B. Description: NEMA WD 1, General-duty general use receptacle.

C. Device Body: Ivory plastic.

D. Configuration: NEMA WD 6, type as specified and indicated.

E. Convenience Receptacle: Type 5-15.

F. GFCI Receptacle: Convenience receptacle with integral ground fault circuit interrupter to meet regulatory requirements.

G. Telephone Jack.

2.4 WALL PLATES

A. Decorative Cover Plate: [Ivory smooth plastic.
1. Westinghouse
2. Bryant
3. Hubell
4. Levitton

B. Jumbo Cover Plate: Ivory smooth plastic.
1. Westinghouse
2. Bryant
3. Hubell
4. Levitton

C. Weatherproof Cover Plate: Gasketed cast metal with hinged gasketed device cover.
1. Westinghouse
2. Bryant
3. Hubell
4. Levitton

PART 3 EXECUTION

3.1 EXAMINATION

A. Section 01039 - Coordination and Meetings: Verification of existing conditions prior to beginning work.

B. Verify that outlet boxes are installed at proper height.

C. Verify that wall openings are neatly cut and will be completely covered by wall plates.

D. Verify that floor boxes are adjusted properly.

E. Verify that branch circuit wiring installation is completed, tested, and ready for connection to wiring devices.

F. Verify that the openings in access floor are in proper locations.

3.2 PREPARATION

A. Provide extension rings to bring outlet boxes flush with finished surface.

B. Clean debris from outlet boxes.

3.3 INSTALLATION

A. Install in accordance with NECA "Standard of Installation."

B. Install devices plumb and level.

C. Install switches with OFF position down.

D. Install wall dimmers to achieve full rating specified and indicated after derating for ganging as instructed by manufacturer.

E. Do not share neutral conductor on load side of dimmers.

F. Install receptacles with grounding pole on bottom.

G. Connect wiring device grounding terminal to branch circuit equipment grounding conductor.

H. Install decorative plates on switch, receptacle, and blank outlets in finished areas.

I. Connect wiring devices by wrapping conductor around screw terminal.

J. Use jumbo size plates for outlets installed in masonry walls.

K. Install galvanized steel plates on outlet boxes and junction boxes in unfinished areas, above accessible ceilings, and on surface mounted outlets.

3.4 INTERFACE WITH OTHER PRODUCTS

A. Coordinate locations of outlet boxes provided under Section 16130 to obtain mounting heights [specified and] indicated on drawings.

B. Install wall switch 48 inches 1.2 m above finished floor.

C. Install convenience receptacle 18 inches (450 mm) above finished floor.

D. Install convenience receptacle 6 inches (150 mm) above backsplash of counter.

E. Install dimmer 48 inches (1.2 m) above finished floor.

F. Install telephone jack 18 inches (450 mm) above finished floor.

G. Install telephone jack for side-reach wall telephone to position top of telephone at 54 inches (1.4 m) above finished floor.

H. Install telephone jack for forward-reach wall telephone to position top of telephone at 48 inches (1.2 m) above finished floor.

3.5 FIELD QUALITY CONTROL

A. Section 01400 - Quality Control; 01650 - Starting of Systems: Field inspection, testing, adjusting, and balancing.

B. Inspect each wiring device for defects.

C. Operate each wall switch with circuit energized and verify proper operation.

D. Verify that each receptacle device is energized.

E. Test each receptacle device for proper polarity.

F. Test each GFCI receptacle device for proper operation.

G. Verify that each telephone jack is properly connected and circuit is operational.

3.6 ADJUSTING

A. Section 01700 - Contract Closeout; 01655 - Starting of Systems: Adjusting installed work.

B. Adjust devices and wall plates to be flush and level.

3.7 CLEANING

A. Section 01700 - Contract Closeout: Cleaning installed work.

B. Clean exposed surfaces to remove splatters and restore finish.

END OF SECTION

SECTION 16170
GROUNDING AND BONDING

PART 1 GENERAL

1.1 SECTION INCLUDES

A. Grounding electrodes and conductors.

B. Equipment grounding conductors.

C. Bonding.

1.2 RELATED SECTIONS

A. Section 02781 - Site Grounding Systems.

B. Section 03200 - Concrete Reinforcement.

C. Section 03300 - Cast-In-Place Concrete.

D. Section 16670 - Lightning Protection Systems.

1.3 REFERENCES

A. Section 01400 - Quality Control: 01090 - Reference Standards: Requirements for references and standards.

B. NETA ATS - Acceptance Testing Specifications for Electrical Power Distribution Equipment and Systems (International Electrical Testing Association).

C. NFPA 70 - National Electrical Code.

1.4 GROUNDING SYSTEM DESCRIPTION

A. Rod electrode.

1.5 PERFORMANCE REQUIREMENTS

A. Grounding System Resistance: 5 ohms.

1.6 SUBMITTALS FOR REVIEW

A. Section 01300 - Submittals: Procedures for submittals.

B. Product Data: Provide for grounding electrodes and connections.

1.7 SUBMITTALS FOR INFORMATION

A. Section 01300 - Submittals: Submittals for information.

B. Test Reports: Indicate overall resistance to ground and resistance of each electrode.

C. Manufacturer's Instructions: Indicate application conditions and limitations of use stipulated by Product testing agency specified under Regulatory Requirements. Include instructions for storage, handling, protection, examination, preparation, and installation of Product.

1.8 SUBMITTALS FOR CLOSEOUT

A. Section 01700 - Contract Closeout: 01730 - Operation and Maintenance Data: 01740 - Warranties: Procedures for submittals.

B. Project Record Documents: Record actual locations of components and grounding electrodes.

C. Certificate of Compliance: Indicate approval of installation by licensed engineer.

1.9 QUALIFICATIONS

A. Manufacturer: Company specializing in manufacturing the Products specified in this section with minimum three years documented experience.

1.10 REGULATORY REQUIREMENTS

A. Conform to requirements of NFPA 70.

B. Products: Listed and classified by Underwriters Laboratories, Inc. as suitable for the purpose specified and indicated.

PART 2 PRODUCTS

2.1 ROD ELECTRODES

A. Manufacturers:
1. Submit.

B. Material: Copper.

C. Diameter: 3/4 inch (19mm).

D. Length: 10 feet (3000mm).

2.2 MECHANICAL CONNECTORS

A. Manufacturers:
1. Submit

B. Material: Bronze.

2.3 EXOTHERMIC CONNECTIONS

A. Manufacturers:
1. Submit

2.4 WIRE

A. Material: Stranded copper bone conductor.

B. Foundation Electrodes: [1/0] AWG.

C. Grounding Electrode Conductor: Size to meet NFPA 70 requirements.

PART 3 EXECUTION

3.1 EXAMINATION

A. Section 01039 - Coordination and Meetings: Verification of existing conditions prior to beginning work.

B. Verify that final backfill and compaction has been completed before driving rod electrodes.

3.2 INSTALLATION

A. Section 01400 - Quality Control: Manufacturer's instructions.

B. Install rod electrodes at locations indicated. Install additional rod electrodes as required to achieve specified resistance to ground.

C. Provide grounding well pipe with cover at each rod location. Install well pipe top flush with finished grade.

D. Install 1/0 AWG bare copper wire in foundation footing.

E. Provide bonding to meet Regulatory Requirements.

F. Bond together metal siding not attached to grounded structure; bond to ground.

G. Bond together reinforcing steel and metal accessories in pool and fountain structures.

H. Bond together each metallic raceway, pipe, duct and other metal object.

I. Equipment Grounding Conductor: Provide separate, insulated conductor within each feeder and branch circuit raceway. Terminate each end on suitable lug, bus, or bushing.

J. Interface with site grounding system installed under Section 02781.

K. Interface with lightning protection system installed under Section 16670.

3.3 FIELD QUALITY CONTROL

A. Section 01400 - Quality Assurance 01650 - Starting of Systems: Field inspection, testing, adjusting.

B. Inspect and test in accordance with NETA ATS, except Section 4.

C. Perform inspections and tests listed in NETA ATS, Section 7.13.

END OF SECTION

SECTION 16180
EQUIPMENT WIRING

PART 1 GENERAL

1.1 SECTION INCLUDES

A. Electrical connections to equipment.

1.2 RELATED SECTIONS

A. Section 16111 - Conduit.

B. Section 16123 - Building Wire and Cable.

C. Section 16130 - Boxes.

1.3 REFERENCES

A. Section 01400 - Quality Control: 01090 - Reference Standards: Requirements for references and standards.

B. NEMA WD 1 - General Purpose Wiring Devices.

C. NEMA WD 6 - Wiring Devices - Dimensional Requirements.

D. NFPA 70 - National Electrical Code.

1.4 SUBMITTALS FOR REVIEW

A. Section 01300 - Submittals: Procedures for submittals.

B. Product Data: Provide wiring device manufacturers catalog information showing dimensions, configurations, and construction.

1.5 SUBMITTALS FOR INFORMATION

A. Section 01300 - Submittals: Submittals for information.

B. Manufacturer's Instructions: Indicate application conditions and limitations of use stipulated by Product testing agency specified under Regulatory Requirements. Include instructions for storage, handling, protection, examination, preparation, and installation of Product.

1.6 REGULATORY REQUIREMENTS

A. Conform to requirements of NFPA 70.

B. Products: Listed and classified by [Underwriters Laboratories, Inc.] [testing firm acceptable to the authority having jurisdiction] as suitable for the purpose specified and indicated.

1.7 COORDINATION

A. Section 01039 - Coordination.

B. Obtain and review shop drawings, product data, manufacturer's wiring diagrams, and manufacturer's instructions for equipment furnished under other sections.

C. Determine connection locations and requirements.

D. Sequence rough-in of electrical connections to coordinate with installation of equipment.

E. Sequence electrical connections to coordinate with start-up of equipment.

PART 2 PRODUCTS

1.1 CORDS AND CAPS

A. Manufacturers:
   1. Submit

B. Attachment Plug Construction: Conform to NEMA WD 1.

C. Configuration: NEMA WD 6; match receptacle configuration at outlet provided for equipment.

D. Cord Construction: NFPA 70, Type SJ multiconductor flexible cord with identified equipment grounding conductor, suitable for use in damp locations.

E. Size: Suitable for connected load of equipment, length of cord, and rating of branch circuit overcurrent protection.

PART 3 EXECUTION

3.1 EXAMINATION

A. Section 01039 - Coordination and Meetings: Verification of existing conditions prior to beginning work.

B. Verify that equipment is ready for electrical connection, wiring, and energization.

3.2 ELECTRICAL CONNECTIONS

A. Make electrical connections in accordance with equipment manufacturer's instructions.

B. Make conduit connections to equipment using flexible conduit. Use liquidtight flexible conduit with watertight connectors in damp or wet locations.

C. Connect heat producing equipment using wire and cable with insulation suitable for temperatures encountered.

D. Provide receptacle outlet to accommodate connection with attachment plug.

E. Provide cord and cap where field-supplied attachment plug is required.

F. Install suitable strain-relief clamps and fittings for cord connections at outlet boxes and equipment connection boxes.

G. Install disconnect switches, controllers, control stations, and control devices to complete equipment wiring requirements.

H. Install terminal block jumpers to complete equipment wiring requirements.

I. Install interconnecting conduit and wiring between devices and equipment to complete equipment wiring requirements.

J. Coolers and Freezers: Cut and seal conduit openings in freezer and cooler walls, floor, and ceilings.

END OF SECTION

SECTION 16195
ELECTRICAL IDENTIFICATION

PART 1 GENERAL

1.1 SECTION INCLUDES

A. Nameplates and labels.

B. Wire and cable markers.

C. Conduit markers.

1.2 RELATED SECTIONS

A. Section 09900 - Painting.

1.3 REFERENCES

A. Section 01400 - Quality Control: 01090 - Reference Standards: Requirements for references and standards.

B. NFPA 70 - National Electrical Code.

1.4 SUBMITTALS FOR REVIEW

A. Section 01300 - Submittals: Procedures for submittals.

B. Product Data: Provide catalog data for nameplates, labels, and markers.

C. Samples: Submit two nameplates, 4 x 4 inch (100 x 100 mm) in size illustrating materials and engraving quality.

1.5 SUBMITTALS FOR INFORMATION

A. Section 01300 - Submittals: Submittals for information.

B. Manufacturer's Instructions: Indicate application conditions and limitations of use stipulated by Product testing agency specified under Regulatory Requirements. Include instructions for storage, handling, protection, examination, preparation, and installation of Product.

1.6 REGULATORY REQUIREMENTS

A. Conform to requirements of NFPA 70.

B. Products: Listed and classified by [Underwriters Laboratories, Inc.] [testing firm acceptable to the authority having jurisdiction] as suitable for the purpose specified and indicated.

PART 2 PRODUCTS

2.1 NAMEPLATES AND LABELS

A. Nameplates: Engraved three-layer laminated plastic, white letters on black background.

B. Locations:
   1. Each electrical distribution panel safety switch, main distribution panel and metering equipment enclosure.

C. Letter Size:
   1. 1/4 inch 16 mm letters for identifying individual equipment and loads.

D. Labels: Embossed adhesive tape, with 3/16-inch (5-mm) white letters on black background. Use only for identification of individual brakers.

2.2 WIRE MARKERS

A. Manufacturers:
   1. Submit.

B. Description: Tubing type wire markers.

C. Locations: Each conductor at panelboard gutters pull boxes, outlet and junction boxes.

D. Legend:
   1. Power and Lighting Circuits: Branch circuit or feeder number indicated.

PART 3 EXECUTION

3.1 PREPARATION

A. Degrease and clean surfaces to receive nameplates and labels.

3.2 INSTALLATION

A. Section 01400 - Quality Control: Manufacturer's instructions.

B. Install nameplate and label parallel to equipment lines.

C. Secure nameplate to equipment front using screws.

D. Secure nameplate to inside surface of door on panelboard that is recessed in finished locations.

END OF SECTION

SECTION 16400
SERVICE AND DISTRIBUTION

PART 1 ELECTRIC SERVICE SUPPLY

The high voltage underground electric service supply is to be completely included in this contract including allowance for the connection and termination of said service is to be included to the equipment under the offsite contract.

The high tension service shall be at a distribution voltage of 4160 volts, 3 phase, 4 wire and ground, 60 HERTZ, and all equipment shall be as per PREPA'S latest standards and requirements.

PART 2 GROUNDING

A. Provide suitable grounding as shown in plans and as required by the National Electric Code and the Puerto Rico Energy Power Authority for the frames of High Tension Equipment rotating machines, conduit system, as well as all metallic parts of all the electrical equipment. Neutral of the low voltage system shall be grounded only at the substations or step-down transformer and as indicated. No soldered connections shall be used in the grounding system. All connections shall be of the exothermic type welding process (Cadweld type). Grounding shall be accomplished by means of "grounding assemblies" used as hereinafter specified and/or as shown on the drawings.

1. Three Rod Assembly.
   a. Shall comprise three (3) copperweld ground rods in ¾" diameter x 10 feet long spaced 10 feet triangle, a thermoweld connection at top of each rod, No. 4/0 AWG (minimum) base stranded 19 cooper cable.

2. Single or grid assemblies.
   a. Shall comprise a single multiple on grid type, layout, cooperweld ground rods in ¾" diameter x 10 feet long spaced at 10 feet (maximum) apart in the form shown, with top thermoweld connections at each rod and throughout the system.

3. Installation.
   a. The loop ground bus shall be 18" below finished grade and 18" outside the building wall or substation pad.
      Ground plates, metal mesh arrangements, ground cable grids and cables connecting ground rod assemblies, and grounded equipment shall be installed 18" bellow finished grade.

   b. Grounding conductors shall be so installed as to permit shortest and most direct path from equipment to ground.

   c. All feeders grounding conductors shall be TW green, size as shown in plans (minimum #8AWG) run in same feeder metal conduit with both conductor and equipment bonded at each end or on separate conduits for divided systems.

d. All connections to ground conductors shall be accessible for inspection and made with thermoweld connections to the equipment or structure to be grounded. All contact surfaces shall be thoroughly cleaned before connections are made to insure good metal to metal contact. Equipment connection on #2 AWG or smaller to be with approved mechanical type connectors.

e. All ground bus bar shall be continuous throughout its length without joints or splices. All tape from the main ground mat shall be of approved thermoweld connection with all contact surfaces clean.

4. Tests
   a. The resistance between ground and absolute earth shall not exceed two (2) ohms and shall be measured by the Electrical Contractor in the presence of authorized personnel before equipment is placed in operations.

5. Panel Grounding
   a. Provide a grounding tap from nearest grounding loop cable to the terminal strip at the grounding bus bar installed inside every panelboard. Cable shall be 1/0 bare stranded copper and the connection at the grounding loop of the thermoweld type. When feeder has grounding conductor no tap shall be installed.

6. Lighting Standard or Pole Grounding
   a. Provide the grounding system as indicated in the drawings.
   Electrical Contractor shall comply with all sections of the national Electric Code pertaining to grounding and specifically to Article 250 of the NEC.

PART 3 MISCELLANEOUS

A. The Contractor is to provide a grounding system as indicated on drawings and as required by the NEC for the neutral of the low voltage system and for all metallic parts of the electrical equipment.

The neutral of the low voltage of separately derived systems shall only be grounded at the transformer secondary connection or at the distribution switchboard ground bus, as indicated.

The entire conduit system shall be thoroughly grounded. Electrical continuity of the conduit system that is to serve as grounding conductor shall be assured at the points of connection to cabinets, boxes, etc., by using approved bounding fittings or devices approved for the purpose, in accordance with Article 250 of the NEC. Thermoweld connections shall be Cadweld or approved equal.

END OF SECTION

SECTION 16403
EXCAVATION AND BACKFILLING

PART 1 EXCAVATIONS

1. Excavations for trenches and manholes shall be carried down to the depths shown on plans or to such other depths directed in writing by the Architect. Unsuitable material, as determined by the engineer encountered at the depths shown on the drawings, shall be removed to an approved depth and backfilled properly.

2. Unauthorized excavations below the depths shown on the drawings shall be remedied as directed, at the Contractor's expense. Unless otherwise permitted or directed by the Architect, no trenches shall be backfilled until all work therein has been approved by the Engineer.

3. The Contractor shall furnish, install and operate all equipment required to prevent interference with the work by water so that all work may be done in the dry. Temporary drainage ditches excavated by the contractor for his convenience in disposing of water, if approved by the Engineer shall be properly backfilled at the contractor's expense.

4. The contractor shall do such sheeting, shoring, bracing and the likes as requiered to perform the excavations, for safety, including the protection of persons, structures, utilities, etc., and as per applicable state and Department and OSHA regulations.

5. The electrical Contractor shall fully coordinate excavations with owner's Engineer as to record drawings of the area, San Juan Municipal Government and other related public utilities, etc., as to existing buried, as well as future services (conduits, pipes, manholes, etc.).

6. Bottom of trenches and manholes shall be tamped hard to insure proper compaction.

PART 2 BACKFILL

1. Material for backfill shall be clean material, free from muck, debris or other objectionable materials. Fill layers properly compacted shall no exceed 6" thick.
    a. Conduit shall be of sizes indicated and shall be rigid PVC conduit SDR 40, or as indicated on the drawings.

    b. Conduit Banks shall be constructed by the built-up method, as specified hereinafter and as shown.
    Lay the conduit on base separator or spacers of a height sufficient to give clearance of at least 3" above ground. Base separators shall be placed crosswise at 5 feet intervals and leveled to form the grade for the first duct layer. Intermediate spacers shall be placed on top of the first layer of conduits, near each end. As the laying of conduit proceeds, the individual conduits and conduit layers are tied together and to each other with pieces of heavy twine. The use of wire for tying conduit in prohibited. In this manner, a rigid skeleton conduit structure is progressively built up to the height of the full duct formation.

All above ground conduits on the 15KV system shall be painted red with standard USASI No. 61 paint, lacquer finishing coat, or approved equal and appropiately marked.

Concreting shall follow close to and immediately behind the conduit laying. Concrete mixture shall be 2000lbs. concrete at 28 days, complying with specifications set forth hereinbefore and shall have the proper consistency to avoid floating the conduit structure, and spaded continuously and carefully to avoid voids and air pockets. Care shall be exercised to prevent damage to the conduit when dropping the concrete into the trench.

The concrete envelope shall be reinforced at all points where conduits cross fill or loose soil, or water, gas, streams, conduit banks, sewage mains, ditches or culverts. Reinforcement shall consist of one ¾" bar between each two ducts of the bottom layer, and one bar laid at each lower corner of the conduit envelope. Reinforcing shall extend four (4) feet beyond each end of fill or pipe main.

All conduits shall be temporarily plugged with a cap to avoid the entering of water and/or debris in the conduit and they shall be so left until the cables are pulled through. Cleaning procedures are required before cables are installed.

Individual conduits shall be encased in a concrete envelope with a minimum thickness or three (3) inches at top, bottom and sides.

END OF SECTION

SECTION 16405
HIGH VOLTAGE CABLE

PART 1 SHIELDED

1. The high voltage cables shall be for 15KV, single conductor, cross linked, polyethylene insulated, for 90 C operation, PVC jacketed, shielded, suitable for direct burial in the ground of, for use in conduit cable size shall be as shown in the drawings.

2. The cable shall be of the first class quality, manufacturing in accordance with the best acceptable practice. All cable shall be in accordance with and conform to the latest requirements and specifications of the Insulated Power Cable Engineers Association and Puerto Rico Electric Power Authority. Ends shall be sealed to prevent moisture entrance.

3. High voltage splices where permitted shall be made with an approved splice for the cable furnished, and shall be of such quality as recommended by the manufacturer of the cable furnished and in addition be approved by PREPA and the owner or his representative. All splices shall be made by workman familiar with the art of splicing and all such splices shall be completed once started.

4. The high voltage cable shall be terminated in accordance with the manufacturers recommendations. Termination shall be handled with extreme care to prevent damage to stress cones during hook-up.

5. All primary cable entering manholes or high voltages pull boxes shall always be fanned out from the duct mount so as not to cross other ducts or cables.

6. Where there exist, in the conduit run horizontal bends, the pulling set up wherever possible shall be planned for feeding in at the end nearer the bend.

7. Preparation of the duct for the installation of a cable shall involve testing its fitness for receiving the cable and leaving a wire in the duct for later pulling in the wire rope which will be used to draw in the cable. The testing and wiring of the duct shall be done a short time before the cable is installed. Conduits shall be free from cracks and foreign objects that can injure the cable in the installation process.

8. All cables shall be lubricated prior to their installation in the conduits. In locations where pulling tensions are expected to be high because of bends, the duct should be lubricated in advance of the pulling. The lubricant shall have the following characteristics: Ability to reduce the friction between the cable on duct, ease of application on the cable jacket and permanence so as not to interfere with the removal of the cable years later.

9. Cables shall be racked on brackets with insulators, 10 inches minimum vertical spring. All cable jackets, splices and terminations shall be fire proofed approximately as all manholes, substations and switchgear. Tape to be 3M Irvington or approved equal.

10. The Pull of the cables shall be just fast enough to keep the cable and reel moving smoothly. Average speed shall not be more than 50'. The pull shall be applied at the axis of the cable. When pulling, friction of the cable with the manhole and neck shall be avoided.

11. All cable ends shall be sealed and racked high, when splicing is not to be done immediately. The sealing shall be free of grease, oil or other foreign matter and shall be done with rubber tape and black insulating paint. Approved manufacturers: Kerite, Phelps Dodge, Anaconda, Simplex or General Electric.

END OF SECTION

EXHAUST FAN EQUIPMENT

1. Exhaust Fan Equipment Specification.
   A. All exhaust fans shall be of aluminum construction. The exhaust fan shall be equipped with gravity self-acting back draft damper to be installed flush with face of curb.

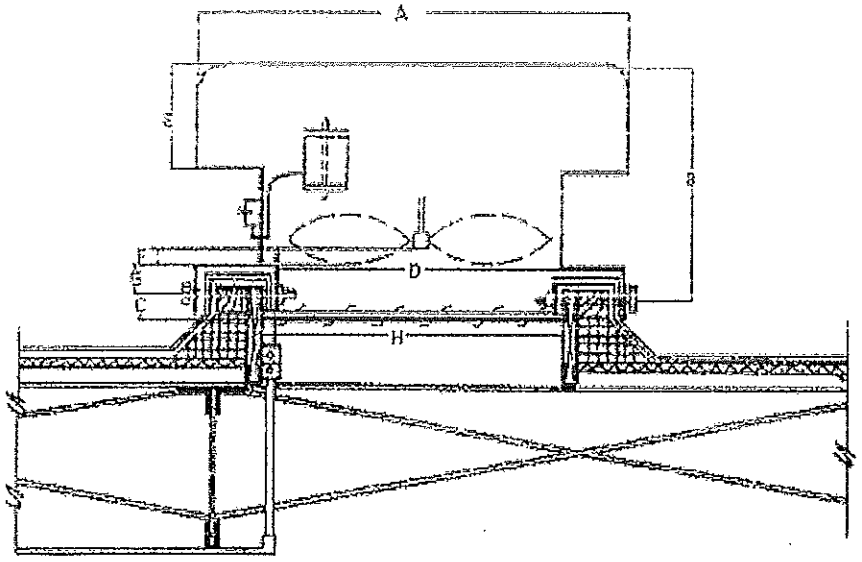

Fan Size	A	B	C	D	E	F	G	H
36"	64 ½"	37"	2 ½"	40 ½"	15"	7 ½"	14 ½"	37"

B. Motor Specification

- The fan motor power supply must be feed trough a liquid tight flexible conduit (3 wire).
- The fan motor power supply at the building roof must be controlled by a 30A-2P-3W-S/N-240VAC, NEMA 3R unfused disconnect (for reference refer to safety switch specifications).

Motor Model	HP	Volt	RPM	Hz	PH	Code	AMD
**5KC47UG694 (ball bearing)	1 hp	115/230V	1,725rpm	60Hz	1	*K	40°C

*K=Totally enclosed

**Permanently lubricated

C. Heater and starter specification

The contractor shall furnish the motor starting switch complete with heater. Heater size shall be in accordance with motor nameplate. Full current motor starting switch shall be equal or similar to cutler hammer catalog number 9101-M74. Continuous rated motors with a service factor of 1.15 to 1.25, select a heater from the heater table. For continuous rated motors with a service factor of 1 multiply the motor full load current by 0.9 and use this value to select the heater. Starter tripping current in 40°C ambient is the minimum value of full load current multiplied by 1.25.

Heater for CR101Y
Heater Amperage Based on 90°C Wire

Motor Full Load Amperes	Heater Number CR123	Motor Full Load Amperes	Heater Number CR123
.44-.49	H005A	3.02-3.27	H377A
.49-.53	H061A	3.28-3.56	H410A
.54-.58	H067A	3.57-3.88	H446A
.59-.65	H074A	3.89-4.22	H486A
.66-.71	H082A	4.23-4.60	H529A
.72-.78	H090A	4.61-5	H575A
.79-.86	H099A	5.01-5.43	H625A
.87-.95	H108A	5.44-5.90	H680A
.96-1.04	H120A	5.91-6.41	H739A
1.05-1.14	H132A	6.42-6.98	H802A
1.15-1.25	H144A	6.99-7.6	H873A
1.26-1.37	H158A	7.61-8.25	H950A
1.38-1.49	H172A	8.26-8.95	H103B
1.5-1.63	H188A	8.96-9.75	H112B
1.64-1.78	H205A	9.76-10.6	H122B
1.79-1.95	H224A	10.7-11.4	H132B
1.96-2.13	H245A	11.5-12.5	H144B
2.14-2.32	H267A	12.6-13.6	H157B
2.33-2.53	H291A	13.7-14.8	H171B
2.54-2.76	H317A	14.9-16	H186B
2.77-3.01	H346A		

D. Installation Specification

- Aluminum side panels and hood must be bolted to the exhaust fan base with screws, nuts and pressure washers. The contractor must use two screws, nuts and pressure washers on each side of the exhaust fan, the measurements for these are 8"× ¼".

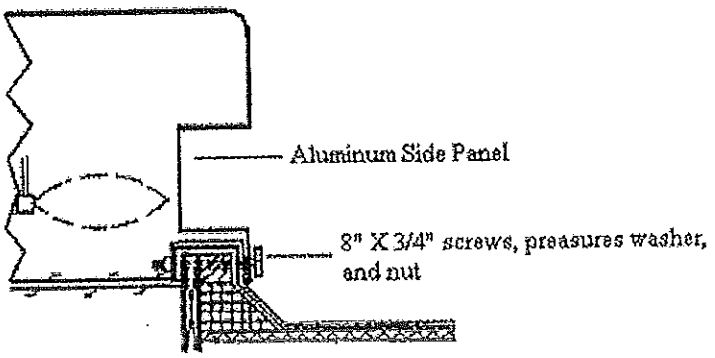

- Fan must be mounted on heavy gage flange inside of side panels; the contractor must balance the motor pulley with fan pulley. The motor must be statically mounted on vibration absorbing bushings, and the drive belt must be tightening adequately.

HOT PLANT-MIX BITUMINOUS PAVEMENT

SPECIFICATION 401 – HOT PLANT-MIX BITUMINOUS PAVEMENT

401-1 DESCRIPTION

401-1.01 Scope

a. This work shall consist of constructing one or more courses of hot plant-mix bituminous pavement on a prepared foundation in accordance with these specifications, and in conformance with the lines, grades, thickness and typical cross sections shown on the plans or established by the Engineer. Courses will be identified as base, leveling and surface.

b. The work shall also include the application of any required tack and prime coats as specified in Specifications 407 and 408 respectively.

401-2 MATERIALS

401-2.01 Bituminous Materials - The bituminous material shall be an asphalt performance graded binder PG 64-22, PG 70-16 or PG 70-22 as per AASHTO MP-1, unless otherwise specified in the contract documents. The Contractor shall submit all the physical properties data certified by an AASHTO Accredited LAB (AAP R18) on the asphalt performance graded binders indicated above. The Authority's Materials Testing Office reserve the right to take samples of the asphalt binder in any location deemed necessary to verify the quality of the product being served.

401-2.02 Aggregates - Aggregates, including mineral filler, shall meet the requirements of Section 703-3 of Specification 703 - Aggregates. The job-mix formula plus and minus the gradation tolerances must remain within the overall gradation requirements of section 703-3. If the job mix plus or minus the gradation tolerances exceed the Section 703-3 limits, then the Section 703-3 limit shall constitute the absolute permitted limit and, therefore, the material represented by that lot will be rejected.

SPECIFICATION 401 – HOT PLANT-MIX BITUMINOUS PAVEMENT

a. Reclaimed Asphalt Pavement (RAP) – The use of Reclaimed Asphalt Pavement (RAP) in the construction of hot plant-mix bituminous pavement courses (S-1, S-2, B-1, B-2, L-1 and L-2) will be allowed as a replacement material of aggregates subject to the following conditions and restrictions:

1. The contractor shall submit a new mix design for mixes containing RAP following the regular procedures established by the Materials Testing Office. The percent (%) of RAP used shall be clearly stated in the mix design and it shall contain all of the data as a regular source of aggregates.

2. All of the requirements and conditions established and all of the reference documents stated herein shall be met regardless of the use of RAP. All of the deductions and/or penalties called for in the contract documents will be applied to deficient materials or lots.

3. It shall be the contractor's responsibility to design the new mix containing RAP in accordance with the Asphalt Institute's Manual MS-2 so that it meets all of the requirements of hot-plant bituminous pavement mix indicated in the contract documents.

4. The contractor shall submit for approval of the Materials Testing Office, prior to the production of RAP, the proposed method in which he intends to incorporate it into the mix.

5. All of the sampling, testing and acceptance will be performed following the requirements indicated herein and in other contract documents.

6. The maximum percentage of RAP allowed to be incorporated in surface courses (S-1 and S-2) shall be 5% by weight of total mix.

7. The maximum percentage of RAP allowed to be incorporated in base and leveling courses (B-1, B-2, L-1 and L-2) shall be 10% by weight of total mix.

8. The Highway Authority's personnel shall have access at all times to the plant's control tower to verify the actual percentages of RAP being produced at the time. At the end of each day, the contractor shall submit a copy of the computer printouts containing the percentages of each of the materials being used or a notarized certification indicating the percentage of RAP used during that day.

9. The Highway and Transportation Authority reserves the right to prohibit immediately the use of RAP in this contract if contractor does not comply with any of the above conditions and restrictions and if the hot-plant bituminous mix with RAP does not exhibit appropriate behavior or performance in the field, as determined by the Authority. The removal and replacement of any tonnage of hot plant bituminous mix in non-compliance with all of the above shall be the contractor's responsibility and at no cost to the Authority.

401-2.03 Hydrated Lime - Hydrated lime shall meet the requirements of Section 712-3 of Specification 712 – Miscellaneous Materials. The Contractor shall submit certified laboratory reports on tests of the hydrated lime to be used showing its compliance with the specifications.

401-2.04 Other Additives – Anti-stripping agents, when required, may be liquid additives to the asphalt performed graded

binder or pulverent solids such as fly ash, hydrated lime or Portland cement added to the aggregates. The proposed additives shall be submitted to the Authority for approval prior to use.

401-2.05 Composition of Mixtures

a. General - The bituminous plant mix shall consist of a mixture of aggregates, asphalt performed graded binder, and anti-stripping additives, if required. The various mixes are as indicated below. The number in parenthesis refers to the applicable number of hammer blows to be used in the Marshall Test (AASHTO T 245) for each mix as called for in the contract documents. If the number of hammer blows is not specified, a value of 75 shall be used for all mixes on primary and secondary roads, and a value of 50 for municipal and tertiary roads as determined by the Authority.

1. Base Courses - B-1 (50 or 75), B-2 (50 or 75)
2. Leveling Courses - L-1 (50 or 75), L-2 (50 or 75)
3. Surface Course - S-1 (50 or 75), S-2 (50 or 75)

b. Job-Mix Formula - The Contractor shall submit in writing for the Engineer's approval, at least three weeks in advance of the date he intends to start paving operations, a job-mix formula for each type of mixture to be used in the project. Each job-mix formula shall be supported by certified laboratory test data and the design charts used. The submission shall also identify the proposed sources of the asphalt cement, aggregates and the specific additives, if any, to be used. When requested by the authority, the Contractor shall submit samples of any of the materials proposed for use in the mix for checking the mix design. The three-week lead requirement may be waived where the Contractor proposes to use a job-mix and mix components which have been previously approved by the Authority. The submittal shall show the compliance of the proposed job-mix formula with the requirements specified below.

c. Mix Requirements - Each mix shall be designed according to the Marshall Mix Design Method as described in the Asphalt Institute Manual MS-2 and shall meet the following requirements:

1. Stability as determined by AASHTO T 245 - 1200 lbs. minimum for 50 blows, 1500 lbs. minimum for 75 blows, and 3500 lbs. maximum for all mixes except that for the B-1 and L-1 mixes the maximum shall be 4500 lbs. For the purposes of this specification, the last sentence of Section 1.1 of AASHTO T 245 shall be disregarded and the Marshall Test will be applicable to all mixes (B-1, B-2, L-1, L-2, S-1, S-2) regardless of maximum aggregate size specified.

2. Flow, 0.01 inch (25 mm) as per AASHTO T 245 – 8 minimum to 16 maximum.

3. Residual stability as determined by Specification 719 - 75% minimum. If the mix fails to meet this residual stability requirement, the aggregate source shall be changed or hydrated lime, or other anti-stripping agent, shall be added to attain the 75% requirement.

4. Percent air voids in the mix as determined by AASHTO T 166, T 209 and T 269 - 3% minimum to 8% maximum for B-1 and L-1 mixes, and 3% minimum to 5% maximum for other mixes.

5. Voids in the mineral aggregate (VMA) as determined by the Asphalt Institute Method shall be as follows:

Nominal Maximum Size Of Aggregate in Mix (inches)	Minimum Voids in Percent
1/2	15
3/4	14
1	13
1 1/2	12

6. Dust-asphalt ratio, computed by dividing the percentage of material passing the 200 sieve by the percent of asphalt performed graded binder in the mix, both determined from extraction tests made on mix samples - 1.2 maximum.

7. Mixing temperature - The temperature at which the asphalt will have a viscosity of 170 +/- 20 Cs as determined from the temperature/viscosity chart for the asphalt to be used. This mixing temperature will be for laboratory use only.

8. Compacting Temperature - The temperature at which asphalt will have attained a viscosity of 280 +/- 30 Cs. This compacting temperature will be for laboratory use only.

The Authority will take, at its discretion, random samples of the mix being produced to test for compliance with the above mix requirements to assure the quality of the mix. If at any time, the results of these random tests show a failure or non-compliance to meet any requirements of the specification, the Authority reserves the right to refuse further deliveries of mixes from the plant until the deficiencies have been corrected including the submission of a new job mix formula, if required.

d. Mix Values - Each job-mix formula submitted shall propose definite values for:

1. Single percentage of aggregates passing each required sieve size.

2. Single percentage of asphalt performed graded binder to be added based on total weight of the mixture.

3. The kind and percentage of additives to be used, if any

4. The kind and percentage of mineral filler to be used, if any

5. The plant mixing temperature and the temperature at which the mixture is to be delivered at the point of placement.

6. The laboratory density of the bituminous mixture.

e. Mix Tolerances - After the job-mix formula is approved, all mixtures furnished for the project shall conform to the following ranges of allowable deviations from target values:

1. Aggregate passing the 3/4", 1/2" or 3/8"..... ± 5%

2. Aggregate passing the No. 4 sieve..... ± 5%

3. Aggregate passing the No. 30 sieve..... ± 4%

4. Aggregate passing the No. 100 sieve..... ± 3%

5. Aggregate passing the No. 200 sieve..... ± 2%

6. Amount of performance graded binder..... ± 0.4%

7. Mixing Temperature..... ± 20° F

f. Mix Changes - Should a change in sources of materials occur or be proposed, or should a job-mix formula prove unsatisfactory as determined by the Engineer, a new job-mix formula shall be developed and submitted by the Contractor for approval prior to production and use. Acceptance of any tonnage of bituminous mix produced under an approved job mix is subject to appropriate behavior of the mix in the field as determined by the Authority. Failure of the approved mix to exhibit appropriate behavior in the field will be cause for its rejection.

401-2.06 Sampling and Testing

a. All sampling and testing will be performed by the Authority, except as noted below. Samples will remain in the custody of the Authority at all times. The Contractor or his authorized representative may be present, if so desired, when these sampling and testing operations are being performed. All testing will be done at a laboratory of the Authority. However, the Authority may, at its discretion, perform the testing at the producer's plant laboratory provided it meets the requirements specified in paragraph 401-2.06c below to the satisfaction of the Authority's Materials Testing Office.

b. The Contractor shall provide the following sampling and testing equipment and their operators:

1. Coring machine and personnel at the project site to take full depth 4" diameter cores from the in-place bituminous pavement as required for testing and acceptance.

2. Scoops, insulated working gloves, plain kraft paper, string or tape for the taking, packaging and transporting of samples of the mix taken at the plant for testing by the Authority at its laboratory.

3. A nuclear density meter, capable of measuring the density of compacted bituminous mixes and of limiting the depth of reading to the required layer thickness, an operator to use it, included in the Authority's Materials Testing Office certified list by the type of meter to be used. The meter shall be calibrated at least once a year by a licensed firm and copies of these calibration certificates shall be submitted to the Engineer and to the Materials Testing Office. This nuclear density meter will be used to check the density of the in-place compacted bituminous concrete when paving operations are in progress, to guide the Contractor on the adequacy of his compaction efforts. In accordance with the calibration certificate, the nuclear density reading time shall be at least 1.00 minute. The Authority reserves the right to verify the calibration of any of the nuclear gages used by the Contractor using the calibration blocks property of the Authority. Nuclear gages which fail such calibration and are not in compliance with ASTM D-2922 and ASTM D-2905 shall not be used in the project. All of the above shall be considered subsidiary obligation.

c. The Contractor shall provide at the mixing plant, for quality control, a laboratory and all the equipment, tools, supplies and other apparatus required for sampling the mix, preparing specimens and testing for compliance of the mix being produced and its components with all the requirements specified in Article 401-2.05.

1. The equipment listed below shall be provided as a minimum at the plant laboratory. This equipment

shall comply with the requirements of the AASHTO or ASTM specification indicated, or be equal or similar to the specific equipment indicated.

(a) Automatic Bituminous Compactor - ASTM D 1559
(b) Specimen Ejector – ASTM D 1559
(c) Asphalt Centrifuge Extractor with Filter Disks- AASHTO T 164, modified for the use of biodegradable solvents (terpene)
(d) Oven (392 degrees F) - Soiltest L-5B
(e) Compaction Molds (4 inches) - ASTM D 1559
(f) Paper Disks for Compaction Molds - ASTM D 1559
(g) Water Bath - ASTM D-1559, at its discretion the Authority may require the bath to be enclosed in an approved cage with padlock.
(h) Marshall Test Set - AASHTO T 245
(i) Asphalt Flow Indicator - ASTM D 1559
(j) Triple Beam Scale (with clamp and rod support for specific gravity weighing) - AASHTO M 231
(k) 12 inch Standard Sieve Set (2 inch to #200) - ASTM E 11
(l) Wet Sieve Set - ASTM E 11
(m) Six Stainless Steel Pans – 20" X 12" X 4" deep
(n) Six Stainless Steel Mixing Bowls -5 qts.
(o) Round Mouth Scoop
(p) Laboratory Tongs
(q) Heat Resistant Gloves
(r) Trowel
(s) Spatulas (10" L X 1 1/4" W)
(t) Calipers

(u) Laboratory Thermometers (temp. range 0 - 200 degrees F) - Soiltest G-171.or G-178
(v) Armored Thermometer (temp. range 0-500 degrees F) - Soiltest G-185 or G-191
(w) Aprons
(x) Biodegradable solvents for asphalt (terpene) - AASHTO T 164

2. The plant laboratory testing equipment shall be calibrated and certified at least once a year by an independent laboratory qualified to perform such calibration.

3. The plant laboratory shall be available to the Authority, upon request, to perform such tests on the mix being prepared, or being delivered to the project, as may be considered necessary by the Engineer.

d. The Authority will take, at its discretion, random samples of the asphalt performed graded binder and the aggregates at the plant, prior to and during mix production, to test for the compliance of these materials with their specifications requirements. If at any time the results of these random tests show a failure of the asphalt performed graded binder or the aggregates to meet the requirements of the specification, the Authority reserves the right to refuse further deliveries of mixes from the plant until the deficiencies have been corrected including the submission of a new job-mix formula, if required.

e. Samples of the mix material being produced for delivery to the project will be taken by the Engineer at the plant for testing by the Authority for compliance with the aggregates grading and asphalt content and, at its discretion other specification requirements. The control unit for sampling, testing and acceptance purposes will be a lot which is defined as 300 tons of bituminous mix or fraction thereof. At the discretion of the Materials Testing Office, if at the end

of the production there are still 90 tons or less not included in any lot, said material could be added to the last lot. Samples will consist of 3 specimens of at least 2000 grams each taken at random from each lot. The Authority may, at its discretion, take samples of the mix being delivered to the project site for testing.

1. The specimens will be taken from the delivery trucks and wrapped in kraft paper for delivery to the Authority's laboratory, as soon as possible, for testing by Authority personnel.

2. Extraction tests will be performed on one of these specimens, selected at random, to determine aggregate sizes, percentage of asphalt in the mix and at the discretion of the Authority, the viscosity of the recovered asphalt. Testing for percentage of aggregate passing the No. 200 sieve will be at the discretion of the Authority.

3. If the tested specimen meets all requirements of the specification, the other two specimens will be disposed of without testing.

4. If the tested specimen fails in any of the specification requirements, the other two samples will be tested and the average results of all three specimens of the lot will be used for comparing with the specification requirements for acceptance purposes.

f. Ten (10) nuclear density readings will be taken at random locations for each 300-ton lot, or fraction thereof, of bituminous mix placed and compacted for testing for compliance with the density requirements. The Contractor's nuclear gage operator and the inspector will witness the nuclear gage readings and report and certify their veracity by

signing the appropriate forms provided by the Authority for such purposes. This lot will not necessarily coincide with the 300-ton specified in paragraph "e" above. In addition, a core will be taken by the contractor under Authority's supervision at one of the nuclear density reading location selected at random. The Materials Testing Office, at its discretion, will inspect the density readings taken at the field.

1. The core shall be 4" in diameter and extend for the full depth of the pavement layer being tested. It shall not be taken until at least 72 hours have elapsed since placing the mix but not later than 144 hours after placing. At his risk, the Contractor may elect to take cores prior to the minimum 72 hours period established. The Authority will not accept extracted core samples that do not meet the above requirements.

2. The computed density of the core will be compared with the nuclear density meter reading for verification purposes.

3. The other nuclear readings will be corrected as required and an average of all the corrected readings will be computed. This average will be used to compare the density of the lot being tested with the laboratory density. At its discretion and after a statistical analysis of the veracity of the nuclear meter and operator the Authority may wave the testing of the core and base acceptance of the lot solely upon nuclear readings.

g. Leveling courses of less than 3.8 centimeters thickness will be exempt from coring and nuclear density testing.

SPECIFICATION 401 – HOT PLANT-MIX BITUMINOUS PAVEMENT

401-2.07 Basis of Acceptance

a. The acceptability of the quality of the hot plant-mix bituminous pavement will be based on the results of the sampling and testing performed as called for in Article 401-2.06 above as compared to the mix requirements for aggregates, asphalt content and compacted density specified in Article 401-2.05 and the tolerances and conditions provided in subsequent paragraphs herein.

b. Asphalt Content - Mixes with asphalt performance graded binder content exceeding the specified tolerance of +/- 0.4% will be rejected. However, at the discretion of the Authority, mixes within +/- 0.52% of the approved job-mix formula asphalt performance graded binder content may be accepted but subject to payment at a reduced unit price as specified in Articles 401-5.01 and 401-5.02. Mixes with asphalt content deviating in excess of +/- 0.52% of the specified asphalt will be rejected and shall be removed from the project at the Contractor's expense and replaced with a suitable mix. However, the Contractor may propose corrective measures to be made at his expense for consideration by the Authority. If these are accepted by the Authority the mix may remain in place subject to such price reductions as may be determined by the Authority but not to exceed 90%. If the corrective measures are not accepted, the deficient mix shall be removed at the Contractor's expense and replaced with acceptable mix.

c. Aggregate Grading - Mixes with aggregates grading exceeding the range of allowable deviations from the job-mix formula specified in paragraph "e" of Article 401-2.05 will be rejected. However, at the discretion of the Authority, mixes with aggregate within the ranges of deviation indicated below may be accepted but subject to payment at a reduced unit price as specified in Articles 401-5.01 and 401-5.02. Mixes exceeding these deviations will be rejected and shall be removed from the project at the Contractor's expense and

replaced with suitable mix. The job-mix formula plus or minus the gradation tolerances must remain within the overall gradation requirements of section 703-3. If the job mix plus or minus the gradation tolerances exceed the Section 703-3 limits, then the Section 703-3 limits shall constitute the absolute permitted limit and, therefore, the material represented by that lot will be rejected (see exception to the above in note 1 below). However, the Contractor may propose corrective measures to be made at his expense for consideration by the Authority. If these are accepted by the Authority, the mix may remain in place but subject to such price reductions as may be determined by the Authority but not to exceed the maximum values specified in paragraph 401-5.02b. If the corrective measures are not accepted, the deficient mix shall be removed at the Contractor's expense and replaced with acceptable mix.

Aggregate Passing	Deviation from Target Value
3/4" Sieve	+/- 7.0% (B-1 7 L-1)
1/2" Sieve	+/- 7.0% (S-2)
3/8" Sieve	+/- 7.0% (B-2, L-2 & S-1)
No. 4 Sieve	+/- 7.0 % (All mixes)
No. 30 Sieve	+/- 6.0 % (All mixes)
No. 100 Sieve	+/- 3.8 % (All mixes)

Note 1:Exception is made with the No. 100 sieve in which an additional 2.5% below the overall limit indicated in table 703-3 will be considered acceptable.

d. When it is determined from the test results that the in place mix has such deficiencies in asphalt content and/or aggregate grading that it should be removed, the Authority may at its discretion, when so requested by the Contractor, evaluate the mix to determine whether it may allow it to remain in place but at reduced payment to be established by the Authority, which deduction will be at least 50 percent of the contract unit price.

e. Mix Density - The compacted bituminous mix shall have a density of at least 97% of the laboratory density for the specified job-mix. Compacted mixes that fail to attain this 97% value but have at least 92% of the density will be accepted, if otherwise acceptable, but subject to a reduced payment as specified in Article 401-5.02. Compacted mixes with less than 92% of the laboratory density will be rejected and shall be removed from the project at the Contractor's expense and replaced. However, the Authority may, at its discretion, allow such failing mixes to remain in place but at a payment of only 50 percent of the contract unit price.

f. Intentionally omitted

g. Thickness - Acceptance for thickness will be as provided in Article 401-3.14.

h. Retesting - When an in-place mix is accepted subject to reduced payment or is rejected and ordered removed under the above provisions, the Contractor may request retesting of the rejected lot. Such request must be made in writing within 30 days of notification by the Authority of the mix deficiencies. All of the retesting described above will be performed by the Materials Testing Office. Such retesting will be conducted as follows:

1. Three squares of the full depth of the pavement layer and weighing approximately 4,000 grams will be saw cut or core out by the Contractor, at his expense, under the supervision of the Engineer for each 300 ton lot being retested.

2. Extraction tests will be performed by the Authority on each specimen to determine the asphalt content and the aggregate grading. These values will supersede and replace the values previously obtained

for the initial specimens taken under the provisions of paragraph d of Article 401-2.06.

3. The average of the results of the three new specimens will be compared with approved job-mix values for acceptance purposes under the requirements of paragraphs b and c of this Article 401-2.07.

4. Retesting for compliance with the density requirements will be performed by repeating the nuclear testing and core extraction, at the Contractor's expense, described in Article 401-2.06f at ten new locations selected at random. These values will supersede and replace the initial readings. The average of the new readings, corrected as may be necessary, will be compared with the laboratory density for acceptance purposes under the provisions of Article 401-2.07e. At the discretion of the Authority, if a retesting layer of an approved mix is already below the final surface course, the contractor shall drill a core through both surfaces and remove the material from the surface course. In said case the original 10 nuclear readings will be used for acceptance purposes. The retesting will be performed by personnel from the Materials Testing Office. The Authority reserves the rights of taking the core extraction. If no core extraction is taken, the average of the 10 nuclear readings will be the retesting density.

i. The results of the retesting made under paragraph "h" above will be considered final for acceptance purposes and no further retesting will be performed.

401-2.08 Sampling Repairs - The Contractor shall, at his expense, refill all core holes and other sampling cuts in the pavement courses which are accepted with mix of the appropriate type, placed and compacted to the satisfaction of the Engineer. On roadways

open to traffic, the repairs shall be made on the same day the cuts and cores are taken.

401-3 CONSTRUCTION REQUIREMENTS

401-3.01 Bituminous Mixing Plant - Plants used for the preparation of bituminous mixes shall conform to AASHTO M 156 modified and supplemented as follows:

a. For verification of weights and measures, character of materials and determination of temperatures used in the preparation of the paving mix, the Engineer, or his authorized representative, shall have access, at all times, to all portions of the mixing plant, aggregates plant, storage yards, and other facilities for producing and processing the mix materials.

b. Scales shall be inspected and sealed as often as the Engineer may deem necessary, but not less than once a year, to assure their continued accuracy, by the Division of Weights and Measures of the Commonwealth Department of Commerce. Any cost involved in the inspection and sealing of the scales shall be at the Contractor's expense.

c. All projects involving 2,000 Tons or more of bituminous mixture shall be served by a plant having automatic controls which coordinate the proportioning, timing and discharge of the mixture.

d. All plants shall have silos and shall be equipped with air pollution control devices which meet the requirements of the Environmental Quality Board.

e. The completed bituminous mixture may be weighed on approved scales furnished by the Contractor at his expense. The scales shall be inspected and calibrated at least once a year by an independent entity.

f. As specified in Article 401-2.06c, the plant shall have a laboratory adequately equipped and staffed to perform AASHTO T 245 and all other testing required for quality control. The producer's laboratory technician shall be present during periods of mix production. The producer's technician may participate in the testing under the supervision of Authority's personnel. If he participates, the producer's technician will sign the appropriate test reports along side the Authority's representative. Refusal to sign on part of the producer's technician will disqualify him from participating in the testing and sampling procedures and may only be present as an observer.

401-3.02 Hauling Equipment - Trucks used for hauling bituminous mixtures shall have tight, clean, smooth metal beds which have been thinly coated with a minimum amount of paraffin oil, lime solution or other approved material to prevent the mixture from adhering to the beds. No gas oil or diesel fuel will be allowed for preventing the mixture adhering to the truck bed. Each truck shall have a cover of canvas or other suitable material of such size as to protect the mixture and for use during hauling operations. No truck will be allowed to leave the plant without covering the mix with the cover of canvas.

401-3.03 Delivery Trucks - Before unloading at the site of the work the bituminous mix supplier shall furnish to the Engineer a delivery tickets containing the following information concerning the bituminous mix in the truck:

a. Name of bituminous mixing plant
b. Serial number of ticket
c. Date, time and truck number
d. Name of Contractor
e. Specific designation of job (name, number and location)
f. Type of mix
g. Weight of mix in the truck

h. Space for signature of Authority's inspector at the paving site and at the scales

i. Temperature of the asphalt mix measured at the plant.

j. Temperature of the asphalt mix measured at the site

401-3.04 Bituminous Pavers

a. Bituminous pavers shall be self-contained, power-propelled units with a vibrating or tamper screed and strike-off assembly covering the full laydown width, heated if necessary, and capable of spreading and finishing courses of bituminous plant mix material which will meet the specified typical section, thickness, smoothness, and grade. Pavers used for shoulders and similar construction shall be capable of spreading and finishing courses of bituminous plant mix material in the widths shown on the plans.

b. The paver shall have a receiving hopper of sufficient capacity to permit a uniform spreading operation. The hopper shall be equipped with a distribution system to place the mixture uniformly in front of the screed. The screed and strike-off assembly shall effectively produce a finished surface of the required evenness and texture without tearing, shoving, or gouging the mixture.

c. The paver shall be capable of operating at forward speeds consistent with satisfactory laying of the mixture.

d. The paver shall be equipped with a grade and slope control system capable of automatically maintaining the screed elevation as specified herein. The control system shall be automatically actuated from either a reference line or surface through a system of mechanical sensors or sensor-directed mechanisms or devices which will maintain the paver screed at a predetermined transverse slope and at the proper elevation to obtain the required surface. When directed, the transverse slope control system shall be made

inoperative and the screed shall be controlled by sensor directed automatic mechanisms which will independently control the elevation of each end of the screed from the reference lines or surfaces. The controls shall work in conjunction with any of the following attachments:

1. Ski-type device, floating beam of not less than 30 feet (9.14 m) in length or as directed by the Engineer.

2. Short ski or shoe to match adjoining lanes either fresh or old.

3. Taut string line wire set by the Contractor to the specified grade.

e. The Contractor shall furnish the long ski and the short ski or shoe, or furnish and install all required stakes and wire for a taut string line. Should the automatic control system become inoperative during the days work, the Contractor will be permitted to finish the day's paving work using manual controls. However, work shall not be resumed thereafter until the automatic control system has been made operative.

f. The Contractor may be exempt from the use of the automatic control system at locations where the Engineer determines that pavement geometry or widths makes its use impracticable.

401-3.05 Rollers - Rollers may be of the vibratory or tandem steel wheel type. Pneumatic-tired rollers may be used in conjunction with either of the steel wheel types. Rollers shall be in good condition, be capable of reversing without backlash, and shall be operated at speeds slow enough to avoid displacement of the bituminous mixture. The number, type, and weight of rollers shall be sufficient to compact the mixture to the required density without

detrimentally affecting the compacted material. For leveling courses, at least one pneumatic tire roller shall be used.

401-3.06 Weather Limitations - Bituminous plant mix shall not be placed on any wet surface or when weather conditions prevent the proper handling or finishing of the bituminous mixture.

401-3.07 Preparation of Surface to be Paved

a. The surface to be paved shall be true to line and grade, dry and free from loose or deleterious material immediately before the placing of bituminous mixture. If necessary, the surface shall be cleaned by brooming or other approved means.

b. When the surface of an existing pavement or old base to be paved is irregular, it shall be brought to uniform grade and cross section by a leveling course as directed, which shall be compacted to the satisfaction of the Engineer before placing subsequent paving courses.

c. When a leveling course is not required, all depressions and other irregularities shall be patched or corrected in a manner satisfactory to the Engineer. All fatty and unsuitable patches, excess crack or joint filler, and all surplus bituminous material, shall be removed from the area to be paved. Blotting of excessive deposits of asphalt with sand or stone will not be permitted.

d. Where the area to be paved is an untreated soil or aggregate, it shall be compacted to the required density and then primed in accordance with the provisions of Specification 408 - Bituminous Prime Coat. The prime coat shall be allowed to cure properly in accordance with the provisions of Specification 408 before any further operations are permitted on the primed area. No prime coat will be

required for single bituminous mix course 7.5 cm. or more in compacted thickness.

e. Before spreading the mixture upon a portland cement concrete surface or a bituminous surface older than 3 months or excessively dirty, a tack coat in accordance with the provisions of Specification 407 - Bituminous Tack Coat shall be applied. No tack is required on bituminous surfaces which are less than 3 months old if they can be cleaned to the satisfaction of the Engineer.

f. Contact surfaces of curbing, gutters, manholes, and other structures shall be painted with a thin, uniform coating of bituminous material as specified for the tack coat prior to the bituminous mixture being placed against them.

401-3.08 Preparation of Bituminous Material - The bituminous material shall be heated to the temperature specified in Table 702-1 of Specification 702 - Bituminous Materials. The bituminous material shall be heated in a manner that will avoid local overheating and provide a continuous supply of the bituminous material to the mixer at a uniform temperature. Asphalt cement shall not be used while it is foaming nor shall it be heated above 350 degrees F at any time after delivery to the plant.

401-3.09 Mixing

a. The aggregates shall be combined in the mixer in the amount of each fraction of aggregates required to meet the job-mix formula. The bituminous material shall be measured or gauged and introduced into the mixer in the amount specified by the job-mix formula. The materials shall be mixed until a complete and uniform coating of the particles and a thorough distribution of the bituminous material throughout the aggregate is secured.

b. No mix will be allowed to leave the plant with a temperature lower or higher than the +/- 20 degrees F of the production temperature indicated in the job mix. Failure to comply with the above requirement will be cause for rejection of the mix contained in the truck.

c. All mixes shall be delivered at the paving site at a temperature of no less than 225 degrees F.

401-3.10 Transporting, Spreading and Finishing

a. The mixture shall be transported from the mixing plant to the paving site in vehicles conforming to the requirements of Article 401-3.02. The required protective cover shall be placed over the mix prior to departing the plant and retained in place until the mix is delivered. Failure to comply with the above requirement will be cause for rejection of the mix contained in the truck.

b. The bituminous mixture shall be laid upon an approved clean surface, spread and struck off to the established grade and elevation. Bituminous pavers shall be used to distribute the mixture either over the entire width or over such partial width as may be practicable.

c. The longitudinal joint in one layer shall be offset from that in the layer immediately below by approximately 15 centimeters; however, the joint in the top layer shall be at the centerline of the pavement if the roadway comprises two lanes of width, or at lane lines if the roadway is more than two lanes in width, unless otherwise directed. Failure of the Contractor to observe the above dispositions and the placement of the longitudinal joint at the wheel path will allow the Authority to reject the mix or to accept the same at a 50% reduction in price.

d. On areas where irregularities or unavoidable obstacles make the use of mechanical spreading and finishing equipment impracticable, the mixture may be spread and finished by hand tools. For such areas the mixture shall be dumped, spread and screeded to provide the required section and compacted thickness. The Contractor shall provide suitable heating equipment for keeping hand tools free from asphalt. The temperature of the tools when used shall not be greater than the temperature of the mix placed. Only heat shall be used for cleaning hand tools. The use of petroleum oils, diesel fuels or volatiles will not be permitted.

e. The mixtures shall be placed in layers as indicated on the plans. No single layer shall exceed 10 cm. (4") in compacted thickness.

401-3.11 Compaction

a. Immediately after the bituminous mixture has been spread, struck off and surface irregularities adjusted, it shall be thoroughly and uniformly compacted by rolling. The surface shall be rolled when the mixture is in the proper condition and when the rolling does not cause undue displacement, cracking or shoving. The number, weight and type of rollers furnished shall be sufficient to obtain the required compaction while the mixture is in workable condition. The sequence of rolling operations and the selection of roller types shall be such as to provide the required pavement density of at least 97% of the laboratory density. However, the use of pneumatic tire rollers is mandatory for compacting L-1 and L-2 leveling courses.

b. Unless otherwise directed, rolling shall begin at the sides and proceed longitudinally parallel to the road centerline, gradually progressing to the crown of the road. Trip overlaps of the roller shall not exceed 6 inches (15 cm.). When paving in echelon or abutting a previously placed lane, the longitudinal joint shall be rolled first followed by the

regular rolling procedure. On super-elevated curves the rolling shall begin at the low side and progress to the high side by overlapping of longitudinal trips parallel to the centerline.

c. Rollers shall move at a slow but uniform speed with the drive roll or wheels nearest the paver except when rolling an incline, then the procedure is reversed.

d. Any displacement occurring as a result of the reversing of the direction of a roller, or from other causes, shall be corrected at once by the use of rakes and addition of fresh mixture when required. Care shall be exercised in rolling not to displace the line and grade of the edges of the bituminous mixture. To prevent adhesion of the mixture to the rollers, the wheels shall be kept properly moistened with water or water mixed with very small quantities of detergent or other approved material.

e. Along forms, curbs, headers, walls and other places not accessible to the rollers, the mixture shall be thoroughly compacted with mechanical tampers. On depressed areas, a trench or small vibratory roller may be used, or cleated compression strips may be used under the roller to transmit compression to the depressed area.

f. Any mixture that becomes loose and broken, mixed with dirt, or is in any way defective shall be removed and replaced with fresh hot mixture, which shall be compacted to conform with the surrounding area. Any area showing an excess or deficiency of bituminous mix material shall be corrected to the satisfaction of the Engineer.

401-3.12 Joints, Trimming Edges and Cleanup

a. Placing of the bituminous mix shall be as continuous as possible. Rollers shall not pass over the unprotected end of

a freshly laid mixture unless authorized by the Engineer. Transverse joints shall be formed by cutting back on the previous run to expose the full depth of the course. When directed by the Engineer, a brush coat of bituminous material of the type being used in the mix shall be used on the contact surfaces of transverse joints just before additional mixture is placed against the previously rolled material.

b. At the beginning or end of a project connecting to an existing pavement the feathering of the new surface course to match the existing grade of the old pavement will not be permitted. To transition and match the grades, the old pavement shall be undercut to a depth equal to the compacted depth of the new surface course being connected to it. This work shall be a subsidiary obligation of the Contractor under the new pavement pay items.

c. Material trimmed from the edges and any other discarded bituminous mixture shall be removed from the roadway and disposed of by the Contractor outside the project limits or in an approved area out of sight from the road.

401-3.13 Surface Requirements

a. The Contractor shall provide a 3-meter (10-foot) rolling straight edge, to be operated by the Engineer, that automatically marks, in colored dye, the length of surface variations which exceed a tolerance of 0.5 centimeter (3/16 inch) in 3 meters (10 feet) for testing the top surface of mainline pavements in a longitudinal direction, or a similar instrument, acceptable to the Authority, that will identify surface variations. In addition, the Contractor shall provide a 3-meter portable aluminum straightedge for testing mainline surfaces transversely and for testing base course surfaces, ramps, frontage roads and other miscellaneous surfaces.

b. The surfaces of new aggregate and bituminous base courses will be tested with a 3-meter straightedge. Any depressions in excess of 1.25 cm. (1/2") shall be corrected with leveling or surface course material.

c. Each lane of new surface course placed on mainline pavement and over a base course of uniform thickness will be tested longitudinally, approximately along the lane wheel path, with the rolling straightedge to determine the length of surface variations which exceeds the permissible tolerance of 0.5 centimeter in 3 meters. The percent of defective length in the total lane measured length will be computed.

d. The top surface course of mainline pavement will be accepted as is when the percentage of defective length does not exceed 4.0% in any 300-meter sections selected by the Engineer. When the percentage of deficient surface length in a lane in such sections exceeds 4.0%, the deficient sections shall be removed or shall be corrected to the satisfaction of the Engineer at the Contractor's expense.

e. The top surface of ramps, frontage roads, and miscellaneous travel ways other than the main line lanes may be tested by the Engineer at random locations using the rolling straightedge or the portable 3-meter straightedge to check for conformance with the 0.5 centimeters surface variation tolerance.

f. During placement of the surface course, random control testing will be performed with the 3-meter straightedge to ascertain the capability of the paving equipment and operations to meet the surface requirements.

401-3.14 Testing Pavement Thickness

a. The cores taken to determine the in-place density shall be used to determine the pavement thickness.

b. For surface courses no core shall be deficient by more than 0.6 cm. and the average of all cores must be not less than the thickness specified in the plans.

c. Base courses shall be checked in the same manner as for surface course in paragraph "a" above, except that the tolerance shall be 1.2 cm. for thicknesses in excess of 10 cm.

d. In addition, if the average total thickness for each course exceeds the plan thickness by more than 15%, the excess tonnage equivalent to the excess in average thickness over 115% of plan thickness will not be compensated.

e. Material which is used for a leveling course will not be considered in pavement thickness determinations.

401-3.15 Protection of Pavement - Sections of newly finished work shall be protected from traffic of any kind until the mixture has become properly hardened by cooling. In no case will traffic be permitted less than 6 hours after completion of the pavement unless a shorter period is authorized or directed by the Engineer in emergencies or in reconstruction work.

401-4 METHOD OF MEASUREMENT

401-4.01 Plant-mix bituminous pavement courses will be measured by the ton of compacted mixture placed in the accepted work, as called for in the contract documents. Measurement will be by weighing the delivery trucks at approved scales. Batch weights will not be accepted as a method of measurement.

401-4.02 Any excess tonnage due to excess thickness, determined as provided in Article 401-3.14d, will be deducted from the measurement for payment.

401-4.03 Due to possible variations in the specific gravity of the aggregates, the tonnage used may vary from the contract

quantities and no adjustment in the contract unit price will be made because of such variation.

401-4.04 Work prescribed under Article 401-3.07, Preparation of Surface to be Paved, except for the leveling course and mix material used for patching and correcting irregularities in old surfaces, will not be measured directly for payment, but will be considered as a subsidiary obligation of the Contractor under the various items of hot plant-mix bituminous pavement. Hot plant-mix material used for patching and leveling in this work will be measured for payment under the respective unit prices.

401-5 BASIS OF PAYMENT

401-5.01 The completed and accepted quantities of each class of hot plant mix pavement, measured as provided above, will be paid for at the contract unit price per unit of measurement except as specified in Article 401-5.02 below. Such prices and payment shall constitute full compensation for the cost of preparation of the surface to be paved; the furnishing and placing of any required prime or tack coat; and the furnishing, placing, compacting and finishing of all required materials for the pavement; and for all labor, equipment, tools and incidentals necessary to complete each item of work as required by the plans and specifications.

401-5.02 Pavement found to be deficient as to asphalt content, aggregate gradation or compacted density but allowed to remain in place under the provisions of Article 401-2.07 will be paid for at a reduced unit price as follows:

a. For asphalt content:

Deviation in Asphalt Content From Design Value	Percent Reduction in Unit Price
+/- 0.4 %	0
+/- 0.41 % to 0.44 %	3
+/- 0.45 % to 0.48 %	6

+/- 0.48 % to 0.52 %	10
Over +/- 0.52 %	See Arts. 2.07b and d

b. For aggregate grading:

Sieve Size	Deviation in % Passing From Design Value	Percent Reduction In Unit Price
3/4" (B-1, L-1)	+/- 5.0	0
Or	+/- 5.1 to 5.5	2
3/8" (B-2, L-2,	+/- 5.6 to 6.0	4
& S-1)	+/- 6.1 to 6.5	7
Or	+/- 6.6 to 7.0	10
1/2" (S-2)	Over 7.0	See Arts. 2.07 c and d
No. 4	+/- 5.0	0
	+/- 5.1 to 5.5	2
	+/- 5.6 to 6.0	4
	+/- 6.1 to 6.5	7
	+/- 6.6 to 7.0	10
	Over 7.0	See Arts. 2.07 c and d
No. 30	+/- 4.0	0
	+/- 4.1 to 4.5	2
	+/- 4.6 to 5.0	4
	+/- 5.1 to 5.5	7
	+/- 5.6 to 6.0	10
	Over 6.0	See Arts. 2.07 c and d
No. 100	+/- 3.0	0
	+/- 3.1 to 3.3	3
	+/- 3.4 to 3.6	6
	+/- 3.7 to 3.8	10
	Over 3.8	See Arts. 2.07 c and d

Where the aggregate is deficient in more than one sieve, the reductions in unit price for aggregate failure

will be applied on the basis of the largest deduction only.

c. For in place density:

Percent of Laboratory Density Attained	Percent Reduction In Unit Price
97 and over	0
96.0 to 96.9	3
95.0 to 95.9	6
94.0 to 94.9	9
93.0 to 93.9	12
92.0 to 92.9	15
Less than 92	See Art. 2.07 e

d. The total percentage deduction in unit price for deficiencies will be determined by adding the percentage reduction due to deficiency in asphalt content, if any, to the highest percentage reduction due to deficiencies in aggregate grading in any of the sieve sizes, and to the percentage reduction due to density deficiencies. However, the total percentage deduction to be applied for these three combined causes shall not exceed 25%. Such reduction will be in addition to any reduction in payment for excess tonnage in pavement thickness provided under Article 401-3.14.

401-5.03 Payment will be made under:

Pay Item	Pay Unit
Hot Plant-Mix Bituminous Pavement Mix S-1 (50 or 75)*....	Ton
Hot Plant-Mix Bituminous Pavement Mix S-2 (50 or 75)*....	Ton
Hot Plant-Mix Bituminous Pavement Mix L-1 (50 or 75)*....	Ton
Hot Plant-Mix Bituminous Pavement Mix L-2 (50 or 75)*....	Ton

SPECIFICATION 401 – HOT PLANT-MIX BITUMINOUS PAVEMENT

Pay Item	Pay Unit
Hot Plant-Mix Bituminous Pavement Mix B-1 (50 or 75)*....	Ton
Hot Plant-Mix Bituminous Pavement Mix B-2 (50 or 75)*....	Ton

* Indicate the number of applicable hammer blows (AASHTO T 245)

SPECIFICATION 402–REHABILITATION OF BITUMINOUS CONCRETE PAVEMENT

402-1 DESCRIPTION

402-1.01 Scope - This work shall consist of the rehabilitation of existing bituminous concrete pavement to correct undesirable conditions such as rutting, bleeding, cracking, rough surfaces and lack of stability. The work shall be performed at the locations shown on the plans or indicated by the Engineer, in accordance with these specifications, and in conformity with the lines, grades, cross sections and details shown on the plans or established by the Engineer.

402-2 MATERIALS

402-2.01 Replacement material for subgrade or subbase shall meet the requirements of Specification 301 - Subbase Course.

402-2.02 Replacement material for aggregate base course shall meet the requirements of Specification 304 - Aggregate Base Course.

402-2.03 Bituminous plant mix material shall meet the applicable requirements of Specification 401 - Hot Plant-Mix Bituminous Pavement for the specific mixes called for in the plans or ordered by the Engineer.

402-2.04 The bituminous material for prime and tack coats shall meet the requirements of Specifications 407 and 408 respectively.

402-3 CONSTRUCTION REQUIREMENTS

402-3.01 General

a. The construction work will include any one or more of the rehabilitation operations described herein at the locations shown on the plans or indicated by the Engineer.

b. Test cores, 4 inches in diameter, will be drilled by the Contractor at the locations selected by and under the

supervision of the Engineer to ascertain the depth and condition of the existing bituminous concrete pavement. The cores shall be identified as to location and date taken, and delivered to the Engineer for evaluation. When so ordered by the Engineer, the test core shall be extended through the existing aggregate base and subbase courses, and the subgrade material, to an additional depth not exceeding 60 centimeters, to ascertain the condition of these materials. If feasible, these core extensions may be drilled using a hand auger.

c. Test pits into the aggregate base, subbase and subgrade will be excavated at the locations selected by and under the supervision of the Engineer to ascertain the condition of the in place materials. The test pits shall be approximately 45 centimeters by 45 centimeters in area and extend to a depth not exceeding 60 centimeters below the bottom of the bituminous concrete pavement courses.

d. Rollers

1. Pneumatic and steel wheeled rollers shall have a minimum operating weight of 8 tons.

2. Vibrating rollers shall have a minimum operating weight of 2.25 tons, a frequency of 3300 vibrations per minute, an amplitude of 0.022 inches, and a centrifugal force per drum of 4600 pounds.

e. The work shall be performed in a manner that causes a minimum of inconvenience to public traffic and in conformance with all maintenance and protection of traffic requirements as provided in the General Provisions, in Specification 638 and on the plans.

402-3.02 Construction Sequence - The rehabilitation operations shall be conducted one lane at a time. Unless otherwise

specified or ordered by the Engineer, the operations shall be performed in the following sequence:

a. Measurement as required of the existing cross sections and cross slopes under the provisions of Specification 150 - Survey and Stakeout.

b. Drilling of test cores in the existing pavement when required.

c. Repair of pavement areas where full depth removal of the existing pavement and possible removal and replacement of base, subbase and subgrade material is required. This includes the removal of the existing pavement within the limits specified or ordered by the Engineer, the investigation of the condition of the existing base, subbase and subgrade including the excavation of such test pits as may be ordered by the Engineer, and the removal and replacement of such base, subbase and subgrade material as may be specified or ordered by the Engineer.

d. Initial adjustment of existing manholes, inlets, valve boxes, junction boxes, pull boxes and miscellaneous structures as required to perform cold milling operations.

e. Partial depth removal of existing bituminous concrete pavement by the cold milling process, under the provisions of Specification 403, when required in the rehabilitation process of rutted, bleeding, unstable and other deficient pavement sections.

f. The following construction items, when included, shall be performed after milling operations and the placing of the leveling course have been completed:

1. Longitudinal slotted pipe drains.

2. Concrete barriers abutting on the pavement being milled.

3. Placing of frames and covers on grates of any manholes, inlets or similar structures which will abut or be located within the pavement.

402-3.03 Removal of Existing Pavement

a. All required partial depth removal of existing bituminous concrete pavement shall be performed and paid for by the cold milling process under Specification 403 except where otherwise specifically authorized in the contract documents, or by the Engineer, because of physical or geometric restraints that preclude the use of the milling equipment.

b. Where either full depth removal of bituminous pavement is required or partial depth removal by other than cold milling is authorized, the edges of each area to be removed shall be saw cut to a depth of at least 5 centimeters. The bituminous material may then be removed by any method selected by the Contractor provided that the adjacent and underlying materials to remain are not disturbed or damaged in any way by the removal procedure. Any such damage shall be repaired by the Contractor, at his expense, in a manner approved by the Engineer.

402-3.04 Rehabilitation of Rutted Pavements

a. The rehabilitation of rutted pavements shall be performed at the locations and by the procedure indicated on the plans which may be either one of the following:

1. Partial removal of the surface layers of the existing pavement by cold milling to the width and depth indicated on the plans or established by the

Engineer and then resurfacing with one or more courses of bituminous plant-mix of the classes and thicknesses shown on the plans. The partial removal and resurfacing of any rutted area shall be completed the same day.

2. Filling the ruts with a bituminous leveling mix of the class indicated in the contract documents and then placing an overlay of one or more courses of bituminous plant-mix of the classes and thicknesses shown on the plans.

b. The use of pneumatic tired rollers to compact each bituminous plant-mix course placed is mandatory in all of the above cases.

c. All patch areas which are to be overlaid by a final surface course, shall be finished to a compacted elevation 0.25 to 0.35 centimeters above the adjacent existing pavement surfaces to remain.

402-3.05 Rehabilitation of Bleeding and Unstable Pavement Surfaces

a. The areas to be repaired by partial or full depth pavement removal under these procedures are identified on the plans. Additional areas may be selected by the Engineer at his discretion.

b. The depth of existing bituminous plant mix pavement surface courses to be removed will be as indicated on the plans but may be revised by the Engineer, at his discretion, on the basis of core data and inspection of areas where pavement has been removed.

c. The partial depth removal of bleeding and unstable pavement surfaces shall be by cold milling under

Specification 403 except that small isolated areas may be removed as specified in paragraph 402-3.03b.

d. Pavement patch areas where plant mix has been partially removed shall be back filled the same day with bituminous plant mix of the class specified in the contract documents, to the depth indicated on the plans, and compacted as required in Specification 401. The use of pneumatic tired rollers for this compaction is mandatory. When the bituminous plant mix for backfilling is not specified, mix type B-1 shall be used for depths in excess of 7.5 centimeters and mix type B-2 for depths of up to 7.5 centimeters.

e. When called for in the contract documents, the total pavement section shall be overlaid with one or more courses of bituminous plant mix of the classes indicated on the plans.

f. When the Engineer determines that the full depth of the existing bituminous plant mix pavement originally scheduled for partial depth removal has to be removed down to the aggregate base or subbase or subgrade, the rehabilitation work shall follow the procedures specified under Article 402-3.06 for full depth removal.

402-3.06 Rehabilitation of Cracked Pavements

a. Cracked bituminous plant mix surfaces normally reflect deficient base and/or subgrade conditions. In the areas of cracked pavement indicated on the plans or selected by the Engineer, the full depth bituminous concrete pavement structure shall be removed down to the untreated aggregate base course, if one is present, or to subgrade elevation if there is no aggregate base course.

b. Each repair area will be inspected by the Engineer after the existing pavement has been removed to determine

the condition and adequacy of the base, subbase, and subgrade material. The contractor shall excavate test pits at the locations and to the depth, not to exceed 60 centimeters, ordered by the Engineer. If the existing material under the pavement is determined to be suitable to remain, the Contractor shall backfill the test pit with replacement subbase and aggregate base course material to the satisfaction of the Engineer.

c. Where the Engineer determines that the existing material under the pavement is unsuitable, the Contractor shall excavate and remove such unsuitable material within the area and to the depth established by the Engineer.

d. The removed unsuitable material shall be replaced by the Contractor with approved subbase and base materials to the depths shown on the plans or ordered by the Engineer. This backfill material shall be placed in layers not exceeding 15 centimeters in thickness and each layer compacted with vibratory rollers to the requirements of Specification 301 for subbase materials and Specification 304 for aggregate base course materials.

e. Any exposed aggregate base or subbase courses which are to remain in place under full depth pavement removal shall be thoroughly recompacted with vibratory rollers prior to placing any new bituminous plant mix material over them.

f. The removal of existing pavement and underlying materials and the placement of all required replacement materials, including the various bituminous plant mix pavement courses in any individual repair area, shall be completed on the same day. The Contractor shall maintain stockpiles of aggregate base course material and subbase material at the project site to insure their ready availability when needed.

g. Where, in addition to correcting cracked pavement areas as indicated above, the complete pavement section is to be partially removed by cold milling under Specification 403, all the partial and full depth repair work shall be completed prior to the cold milling removal operations.

402-3.07 Adjustment of Structures - The initial and/or final adjustment of existing manholes, inlets, valve boxes and other structures within or abutting the pavement that may be required by the rehabilitation operations and to meet final grade requirements, shall be performed and paid for under the provisions of Specification 604 - Manholes, Inlets and Catch Basins.

402-3.08 Disposal of Removed Material - The bituminous pavement material and the base and subgrade materials removed from the repair areas shall be disposed of by the Contractor at his expense. To the extent shown on the plans or approved by the Engineer, the removed material may be used to flatten existing road section slopes. Removed material which is not allowed to be used within the project limits shall be disposed of outside the project right-of-way in areas selected by the Contractor. Copies of all permits authorizing the use of the selected disposal areas shall be furnished by the Contractor to the Engineer.

402-3.09 Protection of Patch Areas

a. The Contractor shall protect from rainfall with sheet plastic material the areas being worked on to minimize the penetration of water into the aggregate base and subgrade prior to placing the new pavement. Any damages to open patch areas left uncovered shall be repaired at the Contractor's expense.

b. Temporary drainage trenches to dispose of any water accumulated in the work areas shall be constructed by the Contractor as shown on the plans or ordered by the Engineer.

SPECIFICATION 402–REHABILITATION OF BITUMINOUS CONCRETE PAVEMENT

This work shall be a subsidiary obligation of the Contractor under the pavement removal pay item.

402-3.10 Bituminous Plant-Mix Overlays

a. The construction of bituminous plant-mix overlays shall be performed in accordance with all the requirements of Specification 401 - Hot Plant-Mix Bituminous Pavement except as specifically modified by this specification.

b. Bituminous plant mix shall be placed in courses of the thicknesses and widths shown on the plans or as directed by the Engineer.

c. In non-contiguous patch areas of less than 10 square meters, the bituminous mixes may be laid and spread with graders and shall be compacted with pneumatic wheel rollers.

402-4 METHOD OF MEASUREMENT

402-4.01 Test cores of the bituminous concrete pavement included in the contract documents or ordered by the Engineer will be measured by the number of cores acceptably drilled and delivered to the Engineer. When the Engineer orders that a core be extended through the aggregate base and subbase, and the subgrade, to an additional depth of up to 60 centimeters as per paragraph 402-3.01b, such core shall be counted as two cores for measurement and payment purposes.

402-4.02 The partial depth removal and disposal of bituminous concrete pavement by cold milling will be measured and paid for by the square meter of pavement acceptably removed and disposed of under Specification 403.

402-4.03 The full depth removal and disposal of bituminous concrete pavement will be measured by the cubic meter of pavement acceptably removed and disposed of. Any pavement area in which

both partial depth removal by cold milling and full depth removal is performed will be included for payment under both pay items.

402-4.04 Test pits ordered by the Engineer to be excavated into the aggregate base, subbase and subgrade, will be measured by the number of such pits excavated.

402-4.05 The removal and disposal of unsuitable aggregate base course, subbase and subgrade material ordered by the Engineer will not be measured for direct payment. This work shall be a subsidiary obligation of the Contractor under the pay items of subbase and aggregate base course materials used to replace the removed materials.

402-4.06 The subbase and aggregate base course materials used to replace removed subgrade, subbase and aggregate base materials will be measured by the cubic meter of each class of compacted material accepted in final position.

402-4.07 Bituminous hot-plant mix for filling ruts, replacing removed bituminous concrete, and placed in overlays will be measured and paid for as provided in Specification 401 - Hot Plant-Mix Bituminous Pavement.

402-4.08 The adjustment of existing manholes, inlets, valve boxes and other structures within or abutting the pavement will be measured and paid for under the respective pay items under Specification 604 - Manholes, Inlets and Catch Basins.

402-5 BASIS OF PAYMENT

402-5.01 The accepted quantity of test cores, determined as provided above, will be paid for at the contract unit price. Such price and payment shall constitute full compensation for drilling the cores, including any extensions ordered, disposing of the removed material, and backfilling the hole where required.

SPECIFICATION 402–REHABILITATION OF BITUMINOUS CONCRETE PAVEMENT

402-5.02 The accepted quantity of full depth removal of bituminous concrete pavement, determined as provided above, will be paid for at the contract unit price. Such price and payment shall constitute full compensation for excavating the pavement and disposing of the excavated material.

404-5.03 The accepted quantity of test pits, determined as provided above, will be paid for at the contract unit price. Such price and payment shall constitute full compensation for excavating the test pits, disposing of the excavated materials and backfilling the pits when no further removal and replacement of the material underlying the pavement is performed.

402-5.04 The accepted quantities of replacement of subbase and aggregate base course material, determined as provided above, will be paid for at the respective contract unit prices. Such prices and payment shall constitute full compensation for the excavation and disposal of unsuitable base, subbase and subgrade material and the furnishing, placing, compacting and finishing of the specified replacement materials.

402-5.05 In addition to the above, payment under the unit prices listed below shall constitute full compensation for all materials, equipment, tools, labor and incidentals necessary to complete each item as required by the plans and specifications.

402-5.06 Payment will be made under:

Pay Item	Pay Unit
Test Cores.....	Each
Test Pits.....	Each
Replacement Subbase Material.....	Cubic Meter
Replacement Aggregate Base Course.....	Cubic Meter
Full Depth Removal of Bituminous Concrete Pavement.....	Cubic Meter

SPECIFICATION 403 – COLD MILLING OF BITUMINOUS CONCRETE PAVEMENT

403-1 DESCRIPTION

403-1.01 Scope - This work shall consist of the partial-depth removal of existing bituminous concrete pavement by cold milling in accordance with these specifications and in conformity with the lines, grades, dimensions and cross sections shown on the plans or established by the Engineer. This work is normally performed to remove excess or deteriorated pavement and to provide the desired road profile and cross section prior to laying a new bituminous concrete surface.

403-2 MATERIALS

403-2.01 No materials are specified.

403-3 CONSTRUCTION REQUIREMENTS

403-3.01 Milling Equipment

a. The cold milling shall be accomplished by a power driven, self-propelled machine which is specifically designed for automatically controlled removal to a specified depth of bituminous concrete pavement or removed to a specified grade line. The equipment shall be of such size, shape and dimensions as will allow it to operate on a full traffic lane 3.65 M (12 ft) wide without restricting the safe passage of traffic in adjacent lanes.

b. The milling machine shall be equipped with automatic grade and slope controls operating from a string line or a ski not less than 20 feet long and shall be capable of removing pavement to an accuracy of $\pm$ 1/8 inch from the control depth or grade line. The automatic controls shall provide for accurately establishing profile grades at each edge of the machine by referencing from an independent grade reference.

c. There shall also be available a small milling machine with a short turning radius for use in milling around manholes and at other irregular or confined areas.

d. Power driven conveyors capable of side, rear or front loading shall be provided together with the necessary equipment to transfer the milled material from the roadway to a truck.

e. The machine shall be equipped with a system to effectively control the dust generated by the cutting operations so as to minimize the dust emissions and air contamination.

f. The equipment shall be furnished with a lighting system adequate for night work.

403-3.02 Construction Sequence

a. Partial depth removal of bituminous concrete pavement by the cold milling procedure shall be performed within the appropriate place in the sequence of pavement rehabilitation operations provided in Article 402-3.02 of Specification 402 - Rehabilitation of Bituminous Concrete Pavement.

b. No cold milling operations shall be performed on a cracked pavement until any required full depth repairs in marked areas have been completed.

403-3.03 Milling and Disposal Operations

a. The bituminous concrete pavement shall be removed by cold milling to the depth, width, grade and cross section shown on the plans or ordered by the Engineer. The number of equipment passes required to achieve the specified width

and depth of cut, profile grade and cross slope shall be determined by the Contractor.

b. The milling operations shall be so scheduled as to proceed in a manner that will produce a uniform finished surface, maintaining a constant cross slope between lane edges.

c. In the event the entire width of a pavement along a section has not been milled by the end of a work period, resulting in a vertical longitudinal face to be exposed to traffic, the maximum deviation between the two adjacent surfaces shall not exceed 3.8 centimeters (1 1/2 in.).

d. Vertical cuts along a gutter line will be allowed at the end of a work period. However, should the depth of the cut exceed 7.5 centimeters (3 in.) the Contractor shall erect, at his expense, signing and warning devices in accordance with the requirements of Part VI of the DTPW's "Manual de Dispositivos Uniformes para el Control de Tránsito en las Vías Públicas de Puerto Rico".

e. When the leveling and final surface courses are not to be placed on the same day that the milling operation is performed, the Contractor shall construct temporary openings to existing drainage structures to facilitate the removal of runoff from the pavement. This work shall be a subsidiary obligation of the Contractor under the cold milling pay item.

f. Transverse vertical edges in the pavement produced by the removal operations shall be tapered at the end of the work period prior to opening to traffic. The taper shall extend at least one meter per each 2.5 centimeters of vertical difference.

g. Adequate loading, sweeping, dust control and hauling equipment shall be provided by the Contractor to remove all

milled pavement material on a daily basis. Unless otherwise provided in the contract documents, the pavement materials removed shall become the property of the Contractor.

h. At locations where the bituminous concrete pavement cannot be removed by the power driven milling machines because of physical or geometrical restraints that preclude the use of the equipment, the pavement may be removed by other methods acceptable to the Engineer. However, in such cases, the edges of the areas to be removed shall be saw cut to a depth of at least 5 centimeters.

i. Patch areas where the existing bituminous pavement has been only partially removed shall be resurfaced on the same day as required under Specification 402.

j. Where same day resurfacing is not mandatory, such as in full width partial depth pavement removal, the placing of leveling and final surfaces courses shall be completed as soon as possible, but not later than five days, after the milling operations have been completed.

403-3.04 Surface Tolerances

a. The cold milling operations shall produce a pavement surface that is true to line, grade and cross-section, and of uniform texture.

b. The milled pavement surface will be subject to visual and straight edge inspection. The Contractor shall provide a 3-meter aluminum straightedge for testing. The milled surface shall not deviate more than 0.6 centimeter (1/4 in.) when tested longitudinally and transversely with the 3-meter straightedge.

c. The transverse slope of the milled surface shall conform to the specified slope within 0.25 percent.

d. All irregularities in excess of the specified tolerance shall be corrected at the Contractor's expense.

403-4 METHOD OF MEASUREMENT

403-4.01 Cold milling of bituminous concrete pavement will be measured by the square meter of pavement acceptably milled to the grades and areas specified on the contract documents or established by the Engineer.

a. For each strip of existing pavement removed by the cold milling process, the volume removed will be determined by multiplying the average depth removed, measured to the nearest millimeter, by the length and width of the strip measured to the nearest centimeter.

b. The average depth of each strip will be determined by measuring the depth removed at the lip along the longitudinal edge of the strip, every 6.0 meters or fraction thereof, and averaging these measurements.

c. Pavement removed in excess of the depth, cross section or profile grade specified in the plans, or ordered by the Engineer, will not be included in the measurement for payment.

403-4.02 Dust control and the loading, hauling and disposal of the milled pavement material will not be measured for direct payment but shall be a subsidiary obligation of the Contractor under the cold milling pay item.

403-5 BASIS OF PAYMENT

403-5.01 The accepted volume of bituminous concrete pavement milled, measured as provided above, will be paid for at the contract unit price. Such price and payment shall constitute full compensation for all materials, equipment, tools, labor and

incidentals necessary to complete the work as required by the plans and specifications.

403-5.02 Payment will be made under:

Pay Item	Pay Unit
Cold Milling Bituminous Concrete Pavement...	Square Meter

SPECIFICATION 407 – BITUMINOUS TACK COAT

407-1 DESCRIPTION

407-1.01 Scope - This work shall consist of preparing and treating an existing bituminous or concrete surface with bituminous material, in order to receive a superimposed bituminous mix course, in accordance with these specifications and in conformity with the lines shown on the plans or established by the Engineer.

407-2 MATERIALS

407-2.01 Unless a specific type or grade of material is called for in the contract documents, the bituminous material used for tack coat may be any of the following meeting the applicable requirements of Specification 702 - Bituminous Materials:

a. Emulsified Asphalt Grades SS-1, SS-1h, CSS-1 or CSS-1h diluted in equal proportions with water.

b. Emulsified Asphalt Grades MS-1, MS-2 or CMS-2 diluted as required but not to exceed 4 parts of water to 6 parts of emulsified asphalt.

407-2.02 The bituminous material will be accepted on the basis of certified test reports to be submitted by the Contractor. The diluted bituminous material may be sampled by the Engineer at the point of delivery at the project, at his discretion, for testing by the Authority.

407-3 CONSTRUCTION REQUIREMENTS

407-3.01 Equipment

a. The Contractor shall provide suitable equipment for cleaning the surface to be treated, for heating the bituminous material, and a distributor for applying the tack coat.

b. The distributor shall be so designed, equipped, maintained and operated that bituminous material at even temperature may be applied uniformly on variable widths of surface up to 4.5 meters at readily determined and controlled

rates from 0.06 to 2.5 gallons per square meter, with uniform pressure, and with an allowable variation from any specified rate not to exceed 0.025 gallon per square meter. Distributor equipment shall include a tachometer, pressure gauges, accurate volume measuring devices or a calibrated tank, and a thermometer for measuring temperatures of tank contents. Distributors shall be equipped with a power unit for the pump, and full circulation spray bars adjustable laterally and vertically.

c. Smaller power spray units or hand-held spray equipment may be used where the Engineer determines that the use of the distributor is impractical.

407-3.02 Preparation of Surface to be Treated

The existing surface shall be broomed and cleaned to permit the adhesion of the bituminous material.

407-3.03 Application of Tack Coat

a. The bituminous material shall be uniformly applied with a pressure distributor at a rate of between 0.08 and 0.12 gallon per square meter. The actual rate of application, temperature and areas to be treated shall be approved by the Engineer prior to application.

b. The tack coat shall be applied in such manner as to offer the least inconvenience to traffic and to permit one-way traffic, where practicable, without pickup or tracking of the bituminous material. It shall not be applied during wet weather, after sunset, or to a wet surface. The surfaces of structures and trees adjacent to the area being treated shall be protected with heavy paper in such manner as to prevent their being spattered or marred.

c. The bituminous material shall be applied only so far in advance of the surface course placement as is necessary to allow it to dry and attain the proper condition of tackiness.

SPECIFICATION 407 – BITUMINOUS TACK COAT

407-4 METHOD OF MEASUREMENT

407-4.01 The bituminous tack will not be measured for direct payment.

407-5 BASIS OF PAYMENT

407-5.01 No payment will be made for the furnishing and application of the bituminous tack coat as this work shall be a subsidiary obligation of the Contractor under the corresponding pay items of hot plant-mix bituminous pavement under Specification 401.

SPECIFICATION 408 – BITUMINOUS PRIME COAT

408-1 DESCRIPTION

408-1.01 Scope - This work shall consist of preparing and treating an existing aggregate or soil surface with bituminous material, and blotter material if required, in order to receive a superimposed bituminous mix course, in accordance with these specifications and in conformity with the lines shown on the plans or established by the Engineer.

408-2 MATERIALS

408-2.01 Bituminous Material - Unless a specific type and grade of material is called for in the contract documents, the bituminous material used for prime coat may be any of the following meeting the applicable requirements of Specification 702 - Bituminous Materials:

a. Emulsified Asphalt Grades SS-1, SS-1h, CSS-1 or CSS-1h diluted in equal proportion with water.

b. Emulsified Asphalt Grades MS-1, MS-2 or CMS-2 diluted as required but not to exceed 4 parts of water to 6 parts of emulsified asphalt.

c. Cut-Back Asphalt Grade RC-70 or RC-250.

408-2.02 Blotter Material - Shall be rock screenings or sand conforming to the gradation requirements of AASHTO M 43, Size No. 10, and shall be non-plastic and free from organic matter or other deleterious material.

408-2.03 Bituminous and blotter materials will be accepted on the basis of certified test reports to be submitted by the Contractor. In addition, the Engineer, at his discretion, may sample the materials at the point of delivery at the project for testing by the Authority.

SPECIFICATION 408 – BITUMINOUS PRIME COAT

408-3 CONSTRUCTION REQUIREMENTS

408-3.01 Equipment

a. The Contractor shall provide suitable equipment for cleaning and preparing the surface to be treated, for heating the bituminous material and a distributor for applying the prime coat.

b. The distributor shall be so designed, equipped, maintained and operated that bituminous material at even temperature may be applied uniformly on variable widths of surface up to 4.5 meters at readily determined and controlled rates form 0.06 to 2.5 gallons per square meter, with uniform pressure, and with an allowable variation from any specified rate not to exceed 0.025 gallon per square meter. Distributor equipment shall include a tachometer, pressure gauges, accurate volume measuring devices or a calibrated tank, and a thermometer for measuring temperatures of tank contents. Distributors shall be equipped with a power unit for the pump, and full circulation spray bars adjustable laterally and vertically.

c. Smaller power spray units or hand-held spray equipment may be used where the Engineer determines that the use of the distributor is impractical.

408-3.02 Preparation of Surface to be Treated

a. The surface to be primed shall be shaped to the required grade and section, shall be free from all ruts, corrugations, segregated material or other irregularities and shall be uniformly compacted. Delays in priming will necessitate reprocessing or reshaping to provide a smooth compacted surface.

b. Before any bituminous material is applied, all loose material, dust, caked clay and any other foreign material shall be removed for the full width of the application.

408-3.03 Application of Prime Coat

a. Bituminous material shall not be applied on a wet surface or when weather conditions would prevent the proper construction of the prime coat. The moisture content of the base to be primed shall not exceed 90 percent of the optimum moisture.

b. Bituminous material shall be applied to the width of the section to be primed by means of a pressure distributor in a uniform, continuous spread, at a rate of between 0.4 to 0.7 gallons per square meter. The actual rate and temperature of application shall be as approved by the Engineer and will be dependent on the character of the surface to be primed. It shall be sufficient to coat the surface thoroughly and uniformly but with no excess.

c. When traffic is maintained, not more than 1/2 of the width of the section shall be treated in one application. Care shall be taken that the application of bituminous material at the junctions of spreads is not in excess of the specified amount. Excess bituminous material shall be squeegeed from the surface. Skipped areas or deficiencies shall be corrected. Building paper shall be placed over the end of the previous applications and the joining application shall start on the building paper. Building paper used shall be removed and satisfactorily disposed of.

d. The primed surface shall not be opened to traffic until bituminous material has been absorbed by the base. At least 4 hours of penetration time shall be allowed before opening to traffic or placing a bituminous mix course on the primed surface.

408-3.04 Application of Blotter Material - If, after the application of the prime coat, the bituminous material fails to penetrate within the time specified and the roadway must be used by

traffic, blotter material shall be spread in the amounts required to absorb any excess bituminous material.

408-4 METHOD OF MEASUREMENT

408-4.01 The bituminous prime coat will not be measured for direct payment.

408-5 BASIS OF PAYMENT

408-5.01 No payment will be made for the furnishing and application of the bituminous prime coat as this work shall be a subsidiary obligation of the Contractor under the corresponding pay items of hot plant-mix bituminous pavement under Specification 401.

SPECIFICATION 409 – BITUMINOUS SURFACE TREATMENTS

409-1 DESCRIPTION

409-1.01 Scope

a. This work shall consist of the construction of a wearing surface composed of separate applications of bituminous material covered with aggregate, either in a single (seal coat) or a double application, in accordance with these specifications and in conformity with the lines and grades shown on the plans or established by the Engineer.

b. The approximate quantities of materials and the sequence of applications and spreadings shall meet the requirements set forth in these specifications applicable to the type of surface treatment called for in the contract documents.

409-2 MATERIALS

409-2.01 Bituminous Materials - Unless otherwise specified in the plans, the bituminous materials shall be an emulsified asphalt RS-2 or CRS-2 meeting the applicable requirements of Specification 702 - Bituminous Materials, but with an asphalt residue between 0.65 and 0.69.

409-2.02 Aggregates

a. Aggregate for surface treatments shall meet the requirements of Section 703-6 of Specification 703 - Aggregates for the grading class specified in the plans.

b. Sand and fine screenings shall conform to paragraph 703-6.03 of Specification 703.

c. Blotter material shall conform to the requirement of Section 703-7 of Specification 703.

409-2.03 Composition and Proportioning

a. Coats - the composition and proportioning for the various classes of seal coats and multiple course surface treatments shall be as shown in Table 409-1. The bituminous materials and aggregates shall be applied at the rates and sequence shown in Table 409-1 for the class of treatment called for in the contract documents. The quantities of bituminous material given in Table 409-1 are approximate and the exact quantity will be set by the Engineer for each application and spreading as necessary to fit conditions.

b. The weights given in Table 409-1 are for aggregates having a bulk specific gravity of 2.65 as determined by AASHTO T 84 and T 85. Proportionate corrections of the table values will be made when the aggregate furnished by the Contractor has a bulk specific gravity above 2.75 or below 2.55. The corrected amount shall be the table weight multiplied by the ratio of the bulk specific gravity of the aggregate to 2.65.

c. Where a bituminous material other than an emulsified asphalt is called for, the rates of application shall be as specified in the contract documents.

TABLE 409-1

CLASSES OF SURFACE TREATMENTS
Approximate Quantities of Material per Square Meter

(Using Emulsified Asphalt)

Aggregate Gradings & Sequence Operations	Treatment Class				
	SC-1	SC-2	BST-40	BST-60	BST-85
First Course:					
Bitumin. Material (gal)	0.18-0.27	0.24-0.42	0.25-0.33	0.32-0.40	0.50-0.60
Aggregate Cover (lbs)					
Sand & Fine Screening	12-18	-	-	-	-
Grading D	-	18-30	-	-	-
Grading C	-	-	28	-	-
Grading B	-	-	-	42	-
Grading A	-	-	-	-	60
Second Course:					
Bitumin. Material (gal)	-	-	0.16-0.22	0.32-.040	0.50-0.60
Aggregate Cover (lbs)					
Grading D	-	-	12	18	-
Grading C	-	-	-	-	25
Totals:					
Bitumin. Material (gal)	0.18-0.27	0.24-0.42	0.41-0.55	0.64-0.80	1.00-1.20
Aggregate (lbs)	12-18	18-30	40	60	85

409-3 CONSTRUCTION REQUIREMENTS

409-3.01 Equipment - The Contractor shall have available and shall use the following equipment or its equivalent as required for the class of surface treatment to be constructed.

a. A self-propelled pressure distributor so designed, equipped, maintained and operated that bituminous material at the specified temperature may be applied uniformly, through spray nozzles mounted on a spray bar, on variable widths of surface up to 4.5 meters at readily determined and controlled rates from 0.06 to 2.0 gallons per square meter, with uniform pressure, and with an allowable variation from any specified rate not to exceed 0.025 gallon per square meter. Distributor equipment shall include a tachometer, pressure gauges, accurate volume measuring devices or a calibrated tank, and a thermometer for measuring temperatures of tank contents. Distributors shall be equipped with a power unit for the pump, and full circulation spray bars adjustable laterally and vertically. Smaller power spray units may be used where the Engineer determines that the use of the distributor is impractical.

b. Sufficient trucks and aggregate spreaders to insure continuous spreading of the aggregate on the uncovered bituminous material. The spreaders shall be of the mechanical type, shall be self-supported (towed) or self-propelled, and shall be capable of producing a smooth, uniform distribution of the cover material. Spreaders of the type attached directly to the rear of the truck body (tail gate spreaders) shall not be used.

c. A sufficient number of approved pneumatic-tire rollers shall be available to completely roll in one pass the full width of the aggregate spread. Pneumatic-tire rollers shall be operated at a maximum speed of 5 miles per hour. With multiple treatments, an approved steel-wheeled roller shall be

used to correct surface irregularities. Steel-wheeled rollers shall be operated at a maximum speed of 3 miles per hour.

d. A rotary power broom and/or power blower.

e. Other equipment of proven performance may be used by the Contractor in addition to or in lieu of the specified equipment when approved by the Engineer.

409-3.02 Weather Limitations - Bituminous material shall be applied only when the surface to be treated is dry or only slightly damp. No bituminous material or aggregate shall be placed during rainy weather or upon surfaces containing pockets of free water.

409-3.03 Preparation of Road Surface

a. The surface to be treated shall be uniformly compacted, smooth, clean, free from loose spots and in conformance with the typical section shown on the plans or established by the Engineer.

b. Where a prime coat has previously been applied to the surface no bituminous material shall be applied until the prime coat has become thoroughly cured, as determined by the Engineer. Surface treatment shall not be applied over any pavement mixture when, due to heat from the sun or insufficient length of the curing period, the stability of the existing pavement is such as to allow penetration or displacement of the existing surface by the cover material during the rolling operations.

c. Bituminous surfaces to be treated shall be swept clean with a power broom or power blower supplemented by hand sweeping as required to remove all loose material and deleterious matter.

409-3.04 Protection of Adjacent Surfaces - Where bituminous surface treatments are applied adjacent to curb and gutter, gutters, or

any other concrete surface, the concrete surfaces shall be covered with heavy paper or protected otherwise as approved by the Engineer, while the bituminous material is being applied. Any bituminous material deposited on such concrete surfaces shall be removed immediately. Manhole covers, inlets, catch basins and any other structure within the roadway area shall be similarly protected during the applications of surface treatment materials.

409-3.05 Application of Bituminous Material

a. After the surface to be treated has been prepared and cleaned to the satisfaction of the Engineer, the bituminous material shall be uniformly applied at the specified temperature with an approved pressure distributor. However, no bituminous material shall be placed until the aggregate spreading equipment, rollers and an adequate supply of the required aggregate are available at the site.

b. The area to be covered by any one application of bituminous material shall be not greater than can be covered with the available aggregate and spreading equipment without interruption.

c. Care shall be exercised in setting the angle of the spray nozzles and the spray bar height so that the spray fans will not interfere with each other. The spray nozzle angle, measured from the spray bar axis, shall be from 15 to 30 degrees. To ensure uniformity of spread, the spray bar shall be set at the proper height above the pavement surface to achieve as closely as possible a complete double coverage.

d. Special precautions shall be observed to assure that an even and uniform distribution of bituminous material will be obtained, and the distributor shall be so adjusted and operated as to maintain uniform, even distribution of the type of material being applied. Excessive deposits of bituminous material upon the road surface, caused by stopping or starting the distributor, by leakage, or otherwise, shall be immediately

removed. Skipped areas or deficiencies in distribution shall also be immediately corrected.

e. Distribution pressure shall be maintained at no less than 20 but not more than 75 pounds per square inch at the nozzles.

409-3.06 Application of Aggregate Cover

a. General

1. Aggregate of the designated gradation shall be applied with the approved spreading equipment at the rate set forth in this specification or established by the Engineer. During the spreading, excesses and deficiencies shall be corrected by the addition of aggregate until a uniform texture is achieved. Hand methods may be required in areas not accessible to power equipment. Brooming and rolling equipment shall be at the site of the application prior to spreading aggregate. Vehicles spreading aggregate shall be operated so the bituminous material will be covered before wheels pass over it.

2. Each layer of aggregate shall be initially rolled with pneumatic rollers the full width of the aggregate spreader. Additional rolling as necessary shall be accomplished to adequately seat the cover aggregate, and in no case shall the rolling be less than three complete coverages. For multiple treatments, a final coverage with a steel-wheeled roller may be required by the Engineer to improve rideability.

3. During part-width construction, a strip of bituminous material approximately 15 centimeters wide shall be left uncovered to permit a slight overlap of the bituminous material.

b. Seal Coat

1. Seal coats consist of applying a bituminous material onto an existing bituminous pavement immediately followed by a single, uniform application of cover aggregate, at the rates indicated for the specified class.

2. Spreading of cover aggregate and pneumatic rolling shall immediately follow application of the bituminous material and shall be completed on the same day.

3. The completed aggregate surface shall be lightly broomed and maintained for a period of 4 days or as directed. Maintenance of the surface shall include the distribution of additional cover aggregate or blotter material over the surface to absorb any free bituminous material and cover any areas deficient in aggregate. The maintenance shall be conducted so as not to displace imbedded material. Excess material shall be swept from the entire surface by means of rotary brooms. The surface shall be swept at the time determined by the Engineer.

c. Double Course Surface Treatments

1. Double course surface treatments consist of sequential application of bituminous material and cover aggregate onto a prepared surface at the rates indicated for the class selected.

2. The first application of cover material shall be broomed and rolled as required for seal coats and shall then be allowed to cure for at least 24 hours before the second course is placed.

3. The second and final course shall be completed and maintained as specified for seal coats in paragraph 409-3.06b(3) above.

409-3.07 Surface Requirements - The finished surface shall be uniform and shall conform to the lines, grades, and typical cross section shown in the plans. Any portions of the completed surface which are defective, not properly finished, have fat joints, or are not in reasonably close conformance with these specifications, shall be replaced with a satisfactory surface laid in accordance with these specifications. In this case no compensation will be made for the replaced surface.

409-3.08 Maintenance of Traffic

a. Surface treatment on existing roads open to traffic shall be constructed in a manner to offer the least inconvenience to public traffic and to permit one-way traffic when the roadbed width permits it without pickup or tracking of the bituminous material being applied.

b. When one-way traffic is maintained on the untreated portion of the roadbed, the Contractor shall take all necessary precaution, including providing adequate barricades and traffic control devices, to prevent traffic from encroaching on the freshly applied bituminous material until the cover material has been placed, thoroughly rolled, and allowed to cure adequately.

c. When it is impractical to keep traffic off the finished surface for the desired period, traffic shall be restricted to 10 miles per hour speed during the first two hours and to 20 miles per hour for the remainder of the curing period. The Contractor shall provide the necessary traffic control, including pilot cars and drivers, to maintain these speed limits.

d. During part-width construction, the spread of bituminous material shall not be more than 15 centimeters wider than the width of aggregate cover that can be provided by the spreading device.

409-4 METHOD OF MEASUREMENT

409-4.01 Bituminous Materials

a. Bituminous materials will be measured by the gallon of material of each type and grade specified, applied on the road and accepted. The quantities shall be determined by measurement in the distributor tank immediately before and immediately after each application.

b. When the aggregate to be furnished by the Contractor requires the use of anti-striping additives in the bituminous material to meet the requirements of paragraph 703-6.02 of Specification 703 - Aggregates, no direct measurement for payment of such additives will be made but they shall be considered subsidiary obligation of the Contractor.

409-4.02 Aggregates

a. Cover aggregates of each class specified, applied and accepted will be measured by the dry ton weighed in the vehicle at the producer's plant scale or at the point of delivery utilizing suitable scales furnished by the Contractor and approved by the Engineer.

b. At the option of the Engineer, the cover aggregate may be measured by volume in the truck at the point of delivery and converted to weight in tons based on the density of the loose volume in the truck.

SPECIFICATION 409 – BITUMINOUS SURFACE TREATMENTS

409-5 BASIS OF PAYMENT

409-5.01 The accepted quantities, determined as provided above for each of the pay items listed below which is included in the contract, will be paid for at the contract unit price per unit of measurement. Such prices and payments shall constitute full compensation for preparing the surface to be treated; furnishing and placing any required prime coat; furnishing and placing the bituminous material; furnishing, placing, rolling and brooming the cover aggregates, removing the excess loose material; and for all equipment, tools, labor and incidentals necessary to complete each item of the work as required by the plans and specifications.

409-5.02 Payment will be made under:

Pay Item	Pay Unit
Bituminous Material	Gallon
Seal Coat Aggregate, Class *	Tons
BST Aggregate Grading Class **	Tons

* Indicate SC class number. See Table 409-1

** Indicate Grading Class A, B, C, or D. See Tables 409-1 and 703-5.

SPECIFICATION 410 - HOT PLANT-MIX BITUMINOUS PAVEMENT SMOOTHNESS

410-1 DESCRIPTION

410-1.01 Scope - This work shall consist in measuring the roughness for bituminous pavement lots acceptance. The work shall be performed at the locations shown in the plans or indicated by the Engineer, in accordance with these specifications, and in conformance with the lines, grades and details shown on the plans or established by the Engineer.

a. The Contractor will accomplish roughness test during the construction process to evaluate the performed work and to ease the correction procedures.

b. The Authority will perform the final measurements of surface roughness for the acceptance or rejection of the bituminous pavement lots.

410-1.02 Equipment

a. Pavement smoothness will be measured based upon the Profile Index (PI) as determined by the 25 feet computerized California type profilograph (non-uniformly spaced wheels), or a compatible device that correlates its results with the California type profilograph. The provided equipment shall comply with the ASTM E-1274, or the ASTM E-950 (Class I) in case the compatible device is selected. All pavement lanes and ramps shall be tested.

b. The PI will be determined using the equipment's software. The PI units will be setup in inches per mile and will be carried out to one decimal point. The profilogram is the graph that presents the roughness profile and it will be recorded using a vertical scale of one inch equal one inch, or full scale, vertically. The equipment will be setup using a blanking band of 0.2 inches and a "must correct" bump or depression limit of 0.4 inches in a length of 25 feet for the purpose of the PI computations. Motive power may be manual or by a propulsion unit attached to the assembly. The

equipment will be moved longitudinally at the right wheel path along the pavement, in the direction of traffic, at a speed no greater than 3 MPH.

c. A bituminous pavement lot is defined as 528 feet (0.1-mile) pavement lane. Bituminous pavement lots will begin or end with the equipment's measuring wheel at the abutment end wall, at the change in pavement type, or at 528 feet (0.1-mile) pavement lot limit or fraction. For lanes with 12-feet width or less, the wheel path is located at 3 feet from and parallel to the right edge of pavement. For lanes with greater width than 12 feet, the profile will be taken on the right edge from the approximate lane marking. Manhole covers, drainage grates, pavement markings, signal detection slabs, and any other appurtenances in the wheel path will be included in the measurement of the profile index.

410-1.03 Surface and Tolerances Requirements

a. The Contractor shall furnish paving equipment and employ methods that produce a riding surface having a Profile Index (PI) within the acceptance zone presented in Table1. The equipment will be calibrated and operated by qualified technical personnel in compliance with the equipment's manufacturer recommendations and protocols. Initially, the Contractor shall provide a test section equivalent to three (3) lots for evaluation of the paving methods and equipment for smoothness purposes. Prior to the initial paving operations, or after a long shutdown period, the Contractor shall provide a test section for smoothness evaluation purposes. The smoothness evaluation will be done with the Contractor's equipment as soon as the final rolling has been completed and the required density has been attained. After the initial pavement smoothness evaluation, if paving methods and paving equipment are acceptable to the Engineer, the Contractor may proceed with the paving operation.

b. During the construction stages, the Contractor shall verify the PI every ten (10) lots of production. The Contractor may submit correction proposal for those lots with PI falling in the penalties zone as stated in Table 1. The Authority may reject the Contractor's correction proposal and the bituminous pavement lots will remain with the penalty. If the Authority accepts the correction to take place, the affected lot will be measured and a new PI established. No penalties will be applied to the Contractor until the final evaluation takes place. Lots with a PI falling in the rejected zone stated in Table 1, will be immediately removed and replaced, at the Contractor's, expense prior to continuing the paving operation. All PI measurements will be handled to the Engineer and will be included in every monthly payment request.

c. The final smoothness evaluation will be measured with the Authority's profilograph. The profilograph will be calibrated and operated by qualified technical personnel in conformance with the profilograph manufacturer recommendations and protocols. During testing operations, it will be the Contractor's responsibility to provide traffic control, as it will be to furnish survey services and reference points tied to the stationing system of the project. No compensation will be provided for these services.

d. The acceptance criteria will be in conformance with Table 1. On roadway lots less than 528 feet in length, the penalties will be reduced proportionally with the actual length of the lot. Segments shorter than 15 feet will not be considered for penalties.

410-1.04 Penalties and Credits

a. Penalties will be computed according to the values of Table 1 from the results of the final measurements of surface roughness tests performed by the Authority.

b. Credits, to reduce the amount of the penalties computed as per paragraph a. above, will be computed according to the values of Table 1 from the results of the final measurements of surface roughness tests performed by the Authority.

c. The net amount of the penalty will be computed by the difference between the computed penalties and credits. The net amount of the penalty will be deducted from any monies due or that may become due to the Contractor. No additional payment will be made when the amount of credits exceeds the penalties.

Table 1
Acceptance Criteria for Bituminous Pavements Lots

Acceptance				Rejection	
PI	Credit	PI	Penalty	PI	Penalty
≤ 15	Credit of $200 per every PI equal or under 15	$15 < PI \leq 40$	Penalty of $200 per every PI above 15	> 40	Remove and replace

CONSERVACIÓN BÁSICA
ESPECIFICACIONES ÁREA INTERIOR & EXTERIOR

Manufactura

1. El sellador para paredes será Loxon ó 1,2,3 o igual. De usar una diferente a las antes mencionadas se le presentarán las especificaciones al ingeniero para su evaluación y correspondiente aprobación.

2. La pintura en paredes será la A-100 de Sherwing Williams ó Bio-Pruf de Master Paint. De usar una diferente a las antes mencionadas se le presentarán las especificaciones al ingeniero para su evaluación y correspondiente aprobación.

3. Las capotas de los extractores, los "flashings", los pasamanos y todo lo que sea metal, se pintará con pintura enamel con brillo.

4. El mortero epóxico para resanar los pisos será de color gris y no será cemento hidráulico.

5. Las puertas de metal serán rellenas con poliestireno de la Serie 300 de Amweld o modelo Pioneer.

6. La cerradura antipánica para la puerta de metal de 3' ó 6' será de la serie 30 de Sargent o igual. De usar una diferente a las antes mencionadas se le presentará una muestra al ingeniero para su evaluación y correspondiente aprobación.

7. Se instalarán "Door Stop" en las puertas de metal.

8. En caso de puertas a permanecer en el proyecto, se sustituirán los cilindros de las mismas.

9. Los "bumpers" de goma por set serán 2 de 18" y 1 de 36".

10. La manga para los gabinetes de incendio deberá ser de 100 pies de largo y el pistero deberá ser aprobado por bombero.

11. El lavado a presión mínimo 3,000 psi.

12. Se utilizará cemento regular para resanar paredes interiores y exteriores.

13. La pintura de techo será tipo "Dry Fall".

14. Las puertas de madera serán en caoba sólida de 1 ¾".

15. Se deberá proteger el sistema existente de "sprinkler" antes de pintar el plafón.

16. Los "rolling doors" deberán tener el refuerzo a los angulares laterales.

Baños, Almacén y Cuarto de Conserje

1. Los equipos sanitarios (lavamanos, inodoros y urinales) serán de las siguientes marcas: Briggs, American Standard, Krame ó Kholer.
2. Los inodoros regulares serán tipo eslongados.
3. Los lavamanos serán en cerámica de 18"x 20".
4. Los urinales no pueden tener el sifón expuesto.
5. Las tapas de los inodoros serán de color negro.
6. Las válvulas de limpieza automática para los inodoros y urinales serán Sloan Royal.
7. Las mezcladoras para los lavamanos serán Delta Teck Gooseneck Bar Faucet Chrome Two Handle o igual. De usar una diferente a las antes mencionadas se le presentará una muestra al ingeniero para su evaluación y correspondiente aprobación.
8. El sifón para los lavamanos será con "clean-out" gage 17.
9. Los flexibles para los lavamanos serán en bronce cromados.
10. Las divisiones de baños y paneles corta vista serán en madera de cedro de ¾" forradas en plástico laminado 1/16" y los herrajes serán Jock-Nob, incluye Grab-bar para impedidos.
11. No se permitirán empates en los paneles de cedro ni en el plástico laminado de las particiones de baños, excepto en la partición del baño para impedidos.
12. Se instalarán "grab bars" hasta 42" de longitud en los baños para impedidos estos serán galvanizados y con cubre faltas en el área de instalación.
13. El "Topping" para la instalación de la cerámica de pisos, no debe ser menor de 2" de espesor, de ser necesario.
14. Se utilizará pega marca WECO, para la instalación de la cerámica de piso. De usar una diferente a las antes mencionadas se le presentará una muestra al ingeniero para su evaluación y correspondiente aprobación.
15. Se darán declives hacia los drenajes de piso en el área de los baños.
16. Las cerraduras para las puertas de los baños serán con especificaciones para impedidos, igual a la 6U15 de Sargent o en su lugar "push and pull plate" de Toledo & Co. De usar una diferente a las antes mencionadas se le presentará una muestra al ingeniero para su evaluación y correspondiente aprobación.
17. Los goznes para las puertas de los baños serán de 4" con cajas de bolas.

18. Los tiradores para las puertas de los baños serán con especificaciones para impedidos, igual al "Standard Application 351 Sargent". De usar una diferente a las antes mencionadas se le presentará una muestra al ingeniero para su evaluación y correspondiente aprobación.

19. La tubería de cobre a utilizar en los trabajos de plomería será del Tipo K.

20. No se utilizará lechada de color blanco en las uniones de la cerámica de piso en los baños.

21. Todos los equipos sanitarios para impedidos se instalarán de acuerdo a las regulaciones de ADA.

22. Se entregará certificación de plomería al completar los trabajos de reparaciones.

23. De haber modificaciones en las paredes de los baños el contratista relocalizará el sistema eléctrico de ser necesario.

24. Las ventanas de celosías de aluminio serán Gage 0.062.

CONSERVACIÓN BÁSICA
ESPECIFICACIONES ÁREA INTERIOR & EXTERIOR

Manufactura

1. El sellador para paredes será Loxon ó 1,2,3 o igual. De usar una diferente a las antes mencionadas se le presentarán las especificaciones al ingeniero para su evaluación y correspondiente aprobación.

2. La pintura en paredes será la A-100 de Sherwing Williams ó Bio-Pruf de Master Paint. De usar una diferente a las antes mencionadas se le presentarán las especificaciones al ingeniero para su evaluación y correspondiente aprobación.

3. Las capotas de los extractores, los "flashings", los pasamanos y todo lo que sea metal, se pintará con pintura enamel con brillo.

4. El mortero epóxico para resanar los pisos será de color gris y no será cemento hidráulico.

5. Las puertas de metal serán rellenas con poliestireno de la Serie 300 de Amweld o modelo Pioneer.

6. La cerradura antipánica para la puerta de metal de 3' ó 6' será de la serie 30 de Sargent o igual. De usar una diferente a las antes mencionadas se le presentará una muestra al ingeniero para su evaluación y correspondiente aprobación.

7. Se instalarán "Door Stop" en las puertas de metal.

8. En caso de puertas a permanecer en el proyecto, se sustituirán los cilindros de las mismas.

9. Los "bumpers" de goma por set serán 2 de 18" y 1 de 36".

10. La manga para los gabinetes de incendio deberá ser de 100 pies de largo y el pistero deberá ser aprobado por bombero.

11. El lavado a presión mínimo 3,000 psi.

12. Se utilizará cemento regular para resanar paredes interiores y exteriores.

13. La pintura de techo será tipo "Dry Fall".

14. Las puertas de madera serán en caoba sólida de 1 ¾".

15. Se deberá proteger el sistema existente de "sprinkler" antes de pintar el plafón.

16. Los "rolling doors" deberán tener el refuerzo a los angulares laterales.

Especificaciones

1. ***Remplazo de puertas sencillas, dobles, "rooling" o de madera***
   - Suplir e instalar puerta sencilla rellena con poliestireno modelo Pioneer o igual. El calibre será 16 e incluye el marco, los goznes, los herrajes y el amortiguador de impacto.
   - Suplir e instalar puerta doble rellena con poliestireno modelo Pioneer o igual. El calibre será 16 e incluye el marco, los goznes, los herrajes y los amortiguadores de impacto.
   - Suplir e instalar "rolling doors" de operación manual. Las secciones de la cortina serán curvas de calibre 20 con refuerzo contra vientos y doble angular en el extremo inferior. Incluye las correderas, el eje, la cubierta y los herrajes necesarios.
   - Suplir e instalar puerta de madera sólida de 1 3/4" de espesor. Incluye marco, herrajes, tirador automático, placas metálicas en "Stainless Steel" para abrir y cerrar e instalación de placa de "Stainless Steel" de 6" de alto mínimo en la parte inferior de la puerta por el lado interior. Incluye pintura en barniz. (abrirá hacia manufactura)
   - La terminación de las puertas será con pintura de base de aceite "enamel" con excepción de la puerta rolliza.

2. ***Remplazo de cerraduras y cilindros***
   - Suplir e instalar cerraduras de emergencia de la serie 30 de Sargent en puertas sencillas o dobles. Serán de barra horizontal en combinación con la vertical de tipo media cruz o sola y el patrón exterior será ciego.
   - Suplir e instalar cerradura de cajuela o "mortise" con cilindro Sargent.

3. ***Remplazo de ventanas***
   - Suplir e instalar ventanas de aluminio tipo Miami calibre 0.062 anclada 1 ½" en hormigón con dos (2) tornillos tapcon en las caras horizontales y cuatro (4) tornillos en las caras verticales según aplique.
   - La terminación será con empañetado en la mocheta y aplicación de sellador para juntas de "silicone" acrílico por ambas caras.
   - Suplir e instalar operador de ventana "Heavy Duty" de 4 tornillos.

4. *Instalación de verjas y portones de alambres eslabonados*

- Suplir e instalar verja eslabonada de 6' de altura Ga 9 según detalle C1.2 incluido.
- Suplir e instalar portón de alambre eslabonado Ga 9 en dos hojas con postes de 6"Ø. Se requiere puntos de soldadura en goznes y bastón, según detalle C6.1 incluido.
- Suplir e instalar portón peatonal alambre eslabonado Ga 9. Se requiere puntos de soldadura en los goznes, según detalle C6.1 incluido.

PUERTO RICO
INDUSTRIAL DEVELOPMENT COMPANY
PRIDCO

SUPPLEMENTARY TECHNICAL SPECIFICATIONS

FOR THE FOLLOWING PROPERTY:
DI: 219290
BUILDING: M006205101
PW:7779
LOCATION: BO. CANAS, PONCE, PUERTO RICO

PRIDCO FEMA PA-4339-DR-PR
SOUTH REGION, PUERTO RICO
BID NUMBER: S3-1A

Prepared by

ECRE
ECR ENGINEERING

ELIUD J. VEGA VÁZQUEZ
INGENIERO
LICENCIADO
LIC. # 20541
PUERTO RICO

SEPTEMBER 24, 2025

SUPPLEMENTARY TECHNICAL SPECIFICATIONS

PRIDCO FEMA PA-4339-DR-PR
SOUTH REGION, PUERTO RICO
BID NUMBER: S3-1A

ISSUED FOR BID

TECHNICAL SPECIFICATIONS INDEX

Section No.	Description	Total No. of Pages
01 10 00	SUMMARY OF WORK	
01 33 00	SUBMITAL PROCEDURES	
01 34 00	SHOP DRAWINGS, PRODUCT DATA AND SAMPLES	
01 71 00	CLEANING	
02 21 00	SITE CLEARING	
02 30 00	EARTHWORK	
02 41 19	SELECTIVE DEMOLITION	
03 30 00	CAST IN PLACE CONCRETE	
07 52 19	MODIFIED BITUMEN SHEET ROOFING	
09 24 00	PORTLAND CEMENT PLASTERING	
09 91 00	PAINTING	
23 34 00	EXHAUST FANS	

END OF TABLE OF CONTENTS

SECTION 01 10 00
SUMMARY OF WORK

PART 1 – GENERAL

1.1 SECTION INCLUDES

A. Project Information.

B. Introduction

C. Work covered by Contract Documents.

D. Access to site.

E. Work restrictions.

F. Specification and drawing conventions.

G. Miscellaneous provisions.

H. Scope of Work.

1.2 RELATED SECTIONS

A. OWNER'S STANDARD SPECIFICATIONS

1.3 PROJECT INFORMATION

A. Project Identification: PRIDCO FEMA PA-4339-DR-PR
SOUTH REGION, PUERTO
RICO BID NUMBER: S3-1A

B. Project Location: Ponce, PR

1.4 INTRODUCTION

Industrial building used (leased) for manufacturing and commercial activities damaged by high winds, wind driven rain and water intrusion during the impact of Hurricane María in September 20, 2017. Damages were documented and scope of work for repairs were defined in the Contract Documents.

1.5 WORK COVERED BY CONTRACT DOCUMENTS

A. The Work of Project is defined by the Contract Documents and consists of the following:

1. General Improvements as covered in the Project Drawings and Specifications

2. The Contractor shall furnish all necessary materials, labor, supervision and any other

necessary incidental required to complete the Scope of Work as described herein or as indicated on the drawings and related specifications.

3. All Work of the Project shall be designed and constructed in accordance with the Requirements of the Contract Documents, and all applicable Building Codes and Regulations.

B. Type of Contract:

1. Project will be constructed under a Lump Sum (Single Prime Contract) unless otherwise noted on the Bid Package.

1.6 SPECIFICATION AND DRAWING CONVENTIONS

A. Specification Content: The Specifications use certain conventions for the style of language and the intended meaning of certain terms, words, and phrases when used in particular situations. These conventions are as follows:

1. Imperative mood and streamlined language are generally used in the Specifications. The words "shall," "shall be," or "shall comply with," depending on the context, are implied where a colon (:) is used within a sentence or phrase.

2. Specification requirements are to be performed by Contractor unless specifically stated otherwise.

B. Division 01 General Requirements: Requirements of Sections in Division 01 apply to the Work of all Sections in the Specifications.

C. Drawing Coordination: Requirements for materials and products identified on Drawings are described in detail in the Specifications. One or more of the following are used on Drawings to identify materials and products:

1. Terminology: Materials and products are identified by the typical generic terms used in the individual Specifications Sections.

2. Abbreviations: Materials and products are identified by abbreviations scheduled on Drawings.

3. Keynoting: Materials and products are identified by reference keynotes referencing Specification Section numbers found in this Project Manual.

PART 2 – NOT USED

PART 3 – NOT USED

END OF SECTION

SECTION 01 34 00
SHOP DRAWINGS, PRODUCT DATA AND SAMPLES

PART 1 - GENERAL

1.01 GENERAL CONDITIONS

A. Refer to Bid Package for Owner's Requirements.

B. In the event of conflict between requirements of the General Conditions and this Section covering shop drawings, product data and samples, the requirements of Bid Package govern. Unaltered provisions remain in effect.

1.02 DESCRIPTION

A. Submit shop drawings, product data and samples required by specification sections to the following: Owner, Project Manager, Project Architect and/or Project Engineer and any other Owner's Representative during the Construction.

B. Prepare and submit the Construction Schedule, a separate schedule listing dates for submission and dates reviewed shop drawings, product data and samples will be needed for each product.

PART 2 - PRODUCTS

2.01 SHOP DRAWINGS

A. Submit one digital PDF drawing to be distributed via email and one print. Include fabrication, erection, layout and setting drawings and other such drawings as required under various sections of the specifications until final approval is obtained. Reproduction of Contract Drawings will not be used for Shop Drawings.

B. Date and mark shop drawings to show name of the Project, the Architect, Contractor, originating Subcontractor, Manufacturer or Supplier, and separate details as pertinent.

C. Completely identify on shop drawings specification section and locations at which materials or equipment are to be installed.

2.02 PRODUCT DATA

A. Submit sufficient copies of manufacturer's descriptive data including catalog sheets for materials, equipment and fixtures, showing dimensions, performance characteristics and capacities, wiring diagram and controls, schedule and other pertinent information as required.

B. Submit brochures and other submittal data that cannot be reproduced economically in such quantities as to allow the Architect to retain two (2) copies of each after review. Mark product data to show the name of the Project, Architect, Contractor, originating Subcontractor, Manufacturer or Supplier, and separate details if pertinent.

C. Completely identify on product data specification section and location at which materials or equipment are to be installed.

D. Clearly mark to show pertinent data applicable to the Project.

2.03 SAMPLES

A. Submit physical examples of materials in duplicate when required by specification sections to illustrate materials, workmanship or to establish standards by which completed work shall be judged.

B. Date samples and mark to show the name of the project, Architect, Contractor, originating Subcontractor, Manufacturer or Supplier and separate details if pertinent.

C. Completely identify on samples specification section and location in which materials or equipment are to be installed.

D. Provide wall and ceiling finish material samples from the manufacturer or supplier with attached flame resistance testing classification information (Class A, B or C) for use in Section 01700 Contract Closeout.

E. Provide floor finish material samples from the manufacturer or supplier with attached critical radiant flux testing classification information (Class I or Class II) for use in Section 01700 Contract Closeout.

2.04 CONTRACTOR RESPONSIBILITIES

A. Review shop drawings, product data and samples prior to submission to the Architect.

B. Include on submittals the Contractor's stamp, initialed or signed, certifying review of submittals, verification of field dimensions and compliance with Contract Documents. Shop drawings, product data and samples not so stamped, and checked and approved by the Contractor will not be reviewed by the Architect, but will be returned to the Contractor. Shop drawings stamped and signed as approved by the Contractor but showing evidence that they have not been carefully checked by the Contractor may be returned to the Contractor to be re-checked and re-submitted to the Architect.

2.05 SUBSTITUTIONS

A. Approval required:
   1. The Contract is based on the standards of quality established in the Contract Documents.
   2. All products proposed for use, including those specified by required attributes and performance, require approval by the Architect before being incorporated into the Work.
   3. Do not substitute materials, equipment or methods unless such substitution has been specifically approved for this Work by the Architect.

B. “Or equal”:

1. Where the phrase “or equal” or “or equal as approved by the Architect” occurs in the Contract Documents, do not assume that materials, equipment or methods will be approved as equal unless the items have been specifically approved for this Work by the Architect.
2. Substitutions shall be judged against the specified item for quality, durability, operation, appearance, and other applicable qualities including fitness for use in this situation. The decision of the Architect is final.

PART 3 - EXECUTION

3.01 SUBMISSION REQUIREMENTS

A. Schedule submissions at least two weeks before date reviewed submittals will be needed.

B. Accompany submittals with transmittal letters containing the date, project title, Contractor’s name and address, number of each shop drawing, product data and samples submitted, and notification of deviation from Contract Documents.

1. Material Safety Data Sheet
   Contractor shall furnish to the Architect, for review, four (4) copies of Material Safety Data Sheets (MSDS) for all products as specified or required. Allow ample time for Architect’s comment and review.

   Do not install products until confirmation of review is obtained.

   MSDS copies should be included at the same submittal with shop drawings or product submittal. The following products must include the MSDS copy with the shop drawing or submittal:
   a) Mechanical Insulation
   b) Mastic or Adhesive
   c) Ceiling Tiles or other Composite Materials
   d) Sealants or Caulking
   e) Materials containing or releasing volatile organic compounds (VOC’s)
   f) Paints, Varnishes, Stains or other similar coatings

2. Flame Spread Certificates
   Contractor shall furnish to the Architect, for review, four (4) copies of Flame Spread Certificates for all products as specified or required.

   Allow ample time for Architect’s comment and review.

   Do not install products until confirmation of review is obtained.

   Flame Spread Certificate copies should be included at the same submittal with shop drawings or product submittal. The following products must include the Flame Spread Certificate copy with the shop drawing or submittal:
   a) Carpet
   b) Wallcovering
   c) Fabrics

d) Cubicle curtains

3.02 RESUBMISSION REQUIREMENTS

A. Shop Drawings: Revise initial drawings as required and resubmit as specified for initial submittals. Clearly identify on drawings any changes which have been made other than those requested by the Architect.

B. Product Data and Samples: Submit new datum and samples as required for initial submittal.

3.03 DISTRIBUTION OF SHOP DRAWINGS AND SUBMITTALS

A. Contractor is still responsible for obtaining and distributing prints of shop drawings as necessary after as well as before final approval and for coordination of submittals between his subcontractors and suppliers.

B. Make prints of approved shop drawings which carry the Architect's appropriate stamp.

C. The cost of scanning and printing is the responsibility of the Contractor.

END OF SECTION

SECTION 01 71 00
CLEANING

PART 1 - GENERAL

1.01 DESCRIPTION

A. Work included: Throughout the construction period, maintain the building, work area and site in a standard of cleanliness as described in this Section.

B. Related work:
   1. Documents affecting work of this Section include, but are not necessarily limited to, General Conditions, Supplementary Conditions, and Sections in Division 1 of these Specifications.
   2. In addition to standards described in this Section, comply with requirements for cleaning as described in pertinent other Sections of these Specifications.

1.02 QUALITY ASSURANCE

A. Conduct daily inspection, and more often, if necessary, to verify that requirements for cleanliness are being met.

B. In addition to the standards described in this Section, comply with pertinent requirements of governmental agencies having jurisdiction.

PART 2 - PRODUCTS

2.01 CLEANING MATERIALS AND EQUIPMENT

A. Provide required personnel, equipment, and materials needed to maintain the specified standard of cleanliness.

2.02 COMPATIBILITY

A. Use only the cleaning materials and equipment which are compatible with the surface being cleaned, as recommended by the manufacturer of the material.

PART 3 - EXECUTION

3.01 PROGRESS CLEANING

A. General:
   1. Retain stored items in an orderly arrangement allowing maximum access, not impeding traffic or drainage, and providing required protection of materials.
   2. Do not allow accumulation of scrap, debris, waste material, and other items not required for construction of this Work.
   3. At least twice each month, and more often if necessary, completely remove all scrap, debris, and waste material from the job site.

4. Provide adequate storage for all items awaiting removal from the job site, observing requirements for fire protection and protection of the ecology.

B. Site:
   1. Daily, and more often if necessary, inspect the site and pick up all scrap, debris, and waste material. Remove such items to the place designated for their storage.
   2. Weekly, and more often if necessary, inspect all arrangements of materials stored on the site. Restack, tidy, or otherwise service arrangements to meet the requirements of subparagraph 3.01-A-1 above.
   3. Maintain the site in a neat and orderly condition at all times.

C. Structures:
   1. Weekly, and more often if necessary, inspect the structures and pick up all scrap, debris, and waste material. Remove such items to the place designated for their storage.
   2. Weekly, and more often if necessary, sweep interior spaces clean.
      a) "Clean," for the purpose of this subparagraph, shall be interpreted as meaning free from dust and other material capable of being removed by use of reasonable effort and a hand-held broom.
   3. As required preparatory to installation of succeeding materials, clean the structures or pertinent portions thereof to the degree of cleanliness recommended by the manufacturer of the succeeding material, using equipment and materials required to achieve the necessary cleanliness.
   4. Following the installation of finish floor materials, clean the finish floor daily (and more often if necessary) at all times while work is being performed in the space in which finish materials are installed.
      a) "Clean," for the purpose of this subparagraph, shall be interpreted as meaning free from foreign material which, in the opinion of the Owner, may be injurious to the finish floor material.
   5. For work performed on continuously operated facilities, premises shall be cleaned on a daily basis and more often as necessary in order to maintain premises free of dust in these instances clean shall be interpreted as meaning free from dust and other material capable of being removed by use of reasonable effort and a hand-held wet mop.

3.02 FINAL CLEANING

A. "Clean," for the purpose of this Article, and except as may be specifically provided otherwise, shall be interpreted as meaning the level of cleanliness generally provided by skilled cleaners using commercial quality building maintenance equipment and materials.

B. Prior to completion of the Work, remove from the job site all tools, surplus materials, equipment, scrap, debris, and waste. Conduct final progress cleaning as described in Article 3.1 above.

C. Site:
   1. Unless otherwise specifically directed by the Architect, broom clean paved areas on the site and public paved areas adjacent to the site.
   2. Completely remove the resultant debris.

D. Structures:
   1. Exterior:
      a) Visually inspect exterior surfaces and remove all traces of soil, waste materials, smudges, and other foreign matter.
      b) Remove all traces of splashed materials from adjacent surfaces.

c) If necessary to achieve a uniform degree of cleanliness, hose down the exterior of the structure.
d) In the event of stubborn stains not removable with water, the Owner may require light sandblasting or other cleaning at no additional cost to the Owner.

2. Interior:
   a) Visually inspect interior surfaces and remove all traces of soil, waste materials, smudges, and other foreign matter.
   b) Remove all traces of splashed material from adjacent surfaces.
   c) Remove paint droppings, spots, stains, and dirt from finished surfaces.
3. Glass: Clean inside and outside surfaces with glass cleaner.
5. Polished surfaces: To surfaces requiring routine application of buffed polish, apply the polish recommended by the manufacturer of the material being polished.

B. Schedule final cleaning as approved by the Owner to Provide to the Owner a completely clean Work.

2.03 CLEANING DURING OWNER'S OCCUPANCY

A. Should the Owner occupy the Work or any portion thereof prior to its completion by the Contractor and acceptance by the Owner, responsibilities for interim and final cleaning shall be as determined by the Owner in accordance with the General Conditions of the Contract.

END OF SECTION

SECTION 02 21 00
SITE CLEARING

PART 1 - GENERAL

1.1 DESCRIPTION OF WORK

A. Work Included: Provide labor, materials and equipment necessary to complete the work of this Section, including but not limited to the following:
   1. Protecting existing trees and vegetation to remain, including temporary fencing for trees in close proximity to construction operations.
   2. Removing existing trees and vegetation indicated to be removed.
   3. Clearing and grubbing.
   4. Stripping and stockpiling topsoil.
   5. Removing above and below grade site improvements.
   6. Disconnecting, capping or sealing of utilities as required.

B. Related Work: The following items are not included in this Section and will be performed under the designated Sections:
   1. Section 02300 - EARTHWORK for soil materials, excavating, backfilling, and site grading and removal of site utilities.
   2. Section 02270 - EROSION AND SEDIMENTATION CONTROLS for required erosion and sedimentation control measures.

1.2 DEFINITIONS

A. Topsoil: Natural or cultivated surface-soil layer containing organic matter and sand, silt, and clay particles; friable, pervious, and black or a darker shade of brown, gray, or red than underlying subsoil; reasonably free of subsoil, clay lumps, gravel, and other objects more than 2 inches in diameter; and free of subsoil and weeds, roots, toxic materials, or other non-soil materials.

B. Tree Protection Zone: Area surrounding individual trees or groups of trees to be protected during construction, and defined by the drip line of individual trees or the perimeter drip line of groups of trees, unless otherwise indicated.

1.3 MATERIAL OWNERSHIP

A. Except for stripped topsoil or other materials indicated to remain the Owner’s property, cleared materials shall become Contractor’s property and shall be removed from Project site.

1.4 SUBMITTALS

A. Photographs sufficiently detailed of existing conditions of trees and plantings, adjoining construction, and site improvements that might be misconstrued as damage caused by site clearing.

B. Record drawings, according to Section 001700 - PROJECT CLOSEOUT identifying and accurately locating capped utilities and other subsurface structural, electrical, and mechanical conditions.

1.5 PROJECT CONDITIONS

A. Traffic: Minimize interference with adjoining roads, streets, walks, and other adjacent occupied or used facilities during site-clearing operations.

1. Do not close or obstruct streets, walks, or other adjacent occupied or used facilities without permission from the Owner and authorities having jurisdiction.
2. Provide alternate routes around closed or obstructed traffic ways if required by authorities having jurisdiction.

B. Salvageable Improvements: Carefully remove items indicated to be salvaged and store on Owner's premises where indicated.

C. Utility Locator Service: Notify utility locator service for area where Project is located before site clearing.

D. Do not commence site clearing operations until erosion and sedimentation control measures are in place.

E. Protection of Existing Improvements: Provide protection necessary to prevent damage to existing improvements indicated to remain in place or outside of the limit of work. Protect improvements on adjoining properties and on Owner's property.
1. Restore improvements damaged by Contractor's clearing activities to their original condition, at no additional expense to the Owner.

PART 2 - PRODUCTS (Not Applicable)

PART 3 - EXECUTION

3.1 PREPARATION

A. Protect and maintain benchmarks and survey control points from disturbance during construction.

B. Locate and clearly flag trees and vegetation to remain or to be relocated.

C. Protect existing site improvements to remain from damage during construction.
1. Restore damaged improvements to their original condition, as acceptable to the Owner.

3.2 TREE PROTECTION

A. Erect and maintain temporary fencing around tree protection zones before starting site clearing. Remove fence when construction is complete.
1. Do not store construction materials, debris, or excavated material within fenced area.
2. Do not permit vehicles, equipment, or foot traffic within fenced area.
3. Maintain fenced area free of weeds and trash.
4. Except as otherwise directed, cutting and trimming of existing trees will not be permitted.

B. Do not excavate within tree protection zones, unless otherwise indicated.

C. Where excavation for new construction is required within tree protection zones, hand clear and excavate to minimize damage to root systems. Use narrow-tine spading forks, comb soil to expose roots, and cleanly cut roots as close to excavation as possible.
1. Cover exposed roots with burlap and water regularly.
2. Temporarily support and protect roots from damage until they are permanently redirected and covered with soil.
3. Coat cut faces of roots more than 1-1/2 inches in diameter with emulsified asphalt or other approved coating formulated for use on damaged plant tissues.
4. Backfill with soil as soon as possible.

D. Repair or replace trees and vegetation indicated to remain that are damaged by construction operations, in a manner approved by the Architect.
   1. Employ an arborist, licensed in jurisdiction where Project is located, to submit details of proposed repairs and to repair damage to trees and shrubs.
   2. Replace trees that cannot be repaired and restored to full-growth status, as determined by the Architect.

3.3 UTILITIES

A. Locate, identify, disconnect, and seal or cap off utilities indicated to be removed.
   1. Arrange with utility companies to shut off indicated utilities.

B. Existing Utilities: Do not interrupt utilities serving facilities occupied by the Owner or others unless permitted under the following conditions, and then only after arranging to provide temporary utility services according to requirements indicated.
   1. Notify the Owner not less than two days in advance of proposed utility interruptions.
   2. Do not proceed with utility interruptions without the Owner's written permission.

C. Removal of underground utilities is included in Section 02300 – EARTHWORK.

D. Removal of underground utilities is included in Division 2 Sections covering site utilities.

3.4 CLEARING AND GRUBBING

A. Remove obstructions, trees, shrubs, grass, and other vegetation to permit installation of new construction.
   1. Do not remove trees, shrubs, and other vegetation indicated to remain or to be relocated.
   2. Cut minor roots and branches of trees indicated to remain in a clean and careful manner where such roots and branches obstruct installation of new construction.
   3. Grind stumps and remove roots, obstructions, and debris extending to a depth of 18 inches below exposed subgrade.
   4. Use only hand methods for grubbing within tree protection zone.
   5. Chip removed tree branches and dispose of off-site.

B. Fill depressions caused by clearing and grubbing operations with satisfactory soil material unless further excavation or earthwork is indicated.
   1. Place fill material in horizontal layers not exceeding a loose depth of 8 inches and compact each layer to a density equal to adjacent original ground.

3.5 TOPSOIL STRIPPING

A. Remove sod and grass before stripping topsoil.

B. Strip topsoil to whatever depths are encountered in a manner to prevent intermingling with underlying subsoil or other waste materials.
   1. Remove subsoil and non-soil materials from topsoil, including trash, debris, weeds, roots, and other waste materials.

C. Stockpile topsoil materials away from edge of excavations without intermixing with subsoil. Grade and shape stockpiles to drain surface water. Cover to prevent windblown dust or contamination by air-borne weed seed.
   1. Limit height of topsoil stockpiles to 72 inches.
   2. Do not stockpile topsoil within tree protection zones.

3.6 EXCESS TOPSOIL

A. Topsoil that has been stripped and stockpiled, but is not needed after the completion of all final topsoil spreading and grassing, shall be stockpiled on site in a location to be approved by the Owner.

3.7 SITE IMPROVEMENTS

A. Remove existing above- and below-grade improvements as indicated and as necessary to facilitate new construction.

B. Remove slabs, paving, curbs, gutters, and aggregate base as indicated.
   1. Unless existing full-depth joints coincide with line of demolition, neatly saw-cut length of existing pavement to remain before removing existing pavement. Saw-cut faces vertically.
   2. Paint cut ends of steel reinforcement in concrete to remain to prevent corrosion.

3.8 DISPOSAL

A. Disposal: Remove surplus soil material, unsuitable topsoil, obstructions, demolished materials, and waste materials including trash and debris, and legally dispose of them off the Owner's property.
   1. Burning on site is prohibited.
   2. Separate recyclable materials produced during site clearing from other non-recyclable materials. Store or stockpile without intermixing with other materials and transport them to recycling facilities.

END OF SECTION

SECTION 02 30 00
EARTHWORK

PART 1 - GENERAL

1.1 DESCRIPTION OF WORK

A. Work Included: Provide labor, materials and equipment necessary to complete the work of this Section including, but not limited, to the following:

1. Preparing subgrades for buildings, structures and landscaping.

2. Excavating and backfilling for buildings and structures.

3. Removal of underground utilities.

4. Drainage course for slabs-on-grade.

5. Subbase course for concrete pavements.

6. Subbase and base course for asphalt paving.

7. Subsurface drainage backfill for walls and trenches.

8. Excavating and backfilling for utility trenches.

9. Excavating and backfilling trenches for buried mechanical and electrical utilities and pits for buried utility structures.

B. Related Work: The following items are not included in this Section and will be performed under the designated Sections (If required by Project Scope of Work):

1. Section 02210 - SITE CLEARING for site stripping, grubbing, stripping and stockpiling topsoil, and removal of above- and below-grade improvements and utilities.

2. Section 02270 - EROSION AND SEDIMENTATION CONTROLS for temporary erosion and sedimentation control measures.

3. Section 03300 - CAST-IN-PLACE CONCRETE for granular course if placed over vapor retarder and beneath the slab-on-grade.

4. Division 02, 15, and 16 Sections for installing underground mechanical and electrical utilities and buried mechanical and electrical structures.

1.2 DEFINITIONS

A. Backfill: Soil material or controlled low-strength material used to fill an excavation.

1. Initial Backfill: Backfill placed beside and over pipe in a trench, including haunches to support sides of pipe.

2. Final Backfill: Backfill placed over initial backfill to fill a trench.

B. Base Course: Course placed between the subbase course and hot-mix asphalt paving.

C. Bedding Course: Course placed over the excavated subgrade in a trench before laying pipe.

D. Borrow Soil: Satisfactory soil imported from off-site for use as fill or backfill.

E. Drainage Course: Course supporting the slab-on-grade that also minimizes upward capillary flow of pore water.

F. Excavation: Removal of material encountered above subgrade elevations and to lines and dimensions indicated.

1. Authorized Additional Excavation: Excavation below subgrade elevations or beyond indicated lines and dimensions as directed by Architect. Authorized additional excavation and replacement material will be paid for according to Contract provisions for unit prices.

2. Bulk Excavation: Excavation more than 10 feet in width and more than 30 feet in length.

3. Unauthorized Excavation: Excavation below subgrade elevations or beyond indicated lines and dimensions without direction by Architect. Unauthorized excavation, as well as remedial work directed by Architect, shall be without additional compensation.

G. Fill: Soil materials used to raise existing grades.

H. Rock: Rock material in beds, ledges, unstratified masses, conglomerate deposits, and boulders of rock material that exceed 1 cu. yd. for bulk excavation, or 3/4 cu. yd. for footing, trench, and pit excavation that cannot be removed by rock excavating equipment equivalent to the following in size and performance ratings, without systematic drilling, ram hammering, ripping or blasting, when permitted:

I. Structures: Buildings, footings, foundations, retaining walls, slabs, tanks, curbs, mechanical and electrical appurtenances, or other man-made stationary features constructed above or below the ground surface.

J. Subbase Course: Course placed between the Subgrade and base course for hot-mix asphalt pavement, or course placed between the Subgrade and a cement concrete pavement or a cement concrete or hot-mix asphalt walk.

K. Subgrade: Surface or elevation remaining after completing excavation, or top surface of a fill or backfill immediately below sub base, drainage fill, or topsoil materials.

L. Utilities: On-site underground pipes, conduits, ducts, and cables, as well as underground services within buildings.

1.3 SUBMITTALS

A. Product Data: For the following:

1. Each type of plastic warning tape.

2. Geotextile.

3. Controlled low-strength material, including design mixture.

B. Material Test Reports: From a qualified testing agency indicating and interpreting test results for compliance of the following with requirements indicated:

1. Classification according to ASTM D 2487 of each onsite and borrow soil material proposed for fill and backfill.

2. Laboratory compaction curve according to ASTM D 1557 for each onsite and borrow soil material proposed for fill and backfill.

C. Pre-excavation Photographs and Videotape: Show existing conditions of adjoining construction and site improvements, including finish surfaces, which might be misconstrued as damage caused by earthwork operations. Submit before earthwork begins. Maintain catalog of up-to-date photographs at the site.

1.4 PROJECT CONDITIONS

A. Existing Utilities: Do not interrupt utilities serving facilities occupied by the Owner or others unless permitted in writing by Architect and then only after arranging to provide temporary utility services according to requirements indicated.

1. Notify the Owner not less than two days in advance of proposed utility interruptions.

2. Do not proceed with utility interruptions without the Owner's written permission.

3. Contact utility-locator service for area where Project is located before excavating.

B. Demolish and completely remove from site existing underground utilities indicated to be removed. Coordinate with utility companies to shut off services if lines are active.

PART 2 - PRODUCTS

2.1 SOIL MATERIALS

A. General: Provide borrow soil materials when sufficient satisfactory soil materials are not available from excavations.

B. Satisfactory Soils: ASTM D 2487 Soil Classification Groups GW, GP, GM, SW, SP, and SM or a combination of these groups; free of rock or gravel larger than 3 inches in any dimension, debris, waste, frozen materials, vegetation, and other deleterious matter.

C. Unsatisfactory Soils: Soil Classification Groups GC, SC, CL, ML, OL, CH, MH, OH, and PT according to ASTM D 2487, or a combination of these groups.

1. Unsatisfactory soils also include satisfactory soils not maintained within 2 percent of optimum moisture content at time of compaction.

D. Subbase Material: Naturally or artificially graded mixture of natural or crushed gravel, crushed stone, and natural or crushed sand; ASTM D 2940; with at least 90 percent passing a 1-1/2-inch sieve and not more than 12 percent passing a No. 200 sieve.

E. Base Course: Naturally or artificially graded mixture of natural or crushed gravel, crushed stone, and natural or crushed sand, ASTM D 2940, with at least 95 percent passing a 1-1/2-inch sieve and not more than 8 percent passing a No. 200 sieve.

F. Engineered Fill: Naturally or artificially graded mixture of natural or crushed gravel, crushed stone, and natural or crushed sand, ASTM D 2940, with at least 90 percent passing a 1-1/2-inch sieve and not more than 12 percent passing a No. 200 sieve.

G. Bedding Course: Naturally or artificially graded mixture of natural or crushed gravel, crushed stone, and natural or crushed sand, ASTM D 2940, except with 100 percent passing a 1-inch sieve and not more than 8 percent passing a No. 200 sieve.

H. Drainage Course: Narrowly graded mixture of washed crushed stone, or crushed or uncrushed gravel, ASTM D 448 coarse-aggregate grading Size 57, with 100 percent passing a 1-1/2-inch sieve and 0 to 5 percent passing a No. 8 sieve.

I. Filter Material: Narrowly graded mixture of natural or crushed gravel, or crushed stone and natural sand, ASTM D 448, coarse-aggregate grading Size 67, with 100 percent passing a 1-inch sieve and 0 to 5 percent passing a No. 4 sieve.

J. Sand: ASTM C 33; fine aggregate, natural, or manufactured sand.

K. Impervious Fill: Clayey gravel and sand mixture capable of compacting to a dense state.

2.2 GEOTEXTILES

A. Subsurface Drainage Geotextile: Nonwoven needle-punched geotextile, manufactured for subsurface drainage applications, made from polyolefins or polyesters; with elongation greater than 50 percent; complying with AASHTO M 288 and the following, measured per test methods referenced:

1. Survivability: Class 2, AASHTO M 288.

2. Grab Tensile Strength: 157 lbf, ASTM D 4632.

3. Sewn Seam Strength: 142 lbf, ASTM D 4632.

4. Tear Strength: 56 lbf, ASTM D 4533.

5. Puncture Strength: 56 lbf, ASTM D 4833.

6. Apparent Opening Size: No. 40 sieve, maximum, ASTM D 4751.

7. UV Stability: 50 percent after 500 hours exposure, ASTM D 4355.

B. Separation Geotextile: Woven geotextile fabric, manufactured for separation applications, made from polyolefins or polyesters, with elongation less than 50 percent, complying with AASHTO M 288 and the following, measured per test methods referenced:

1. Survivability: Class 2, AASHTO M 288.

2. Grab Tensile Strength: 247 lbf, ASTM D 4632.

3. Sewn Seam Strength: 222 lbf, ASTM D 4632.

4. Tear Strength: 90 lbf, ASTM D 4533.

5. Puncture Strength: 90 lbf, ASTM D 4833.

6. Apparent Opening Size: No. 60 sieve, maximum, ASTM D 4751.

7. Permittivity: 0.02 per second, minimum, ASTM D 4491.

8. UV Stability: 50 percent after 500 hours exposure, ASTM D 4355.

2.3 ACCESSORIES

A. Detectable Warning Tape: Acid- and alkali-resistant polyethylene film warning tape manufactured for marking and identifying underground utilities, a minimum of 6 inches wide and 4 mils thick, continuously inscribed with a description of the utility, with metallic core encased in a protective jacket for corrosion protection, detectable by metal detector when tape is buried up to 30 inches deep; colored as follows:

1. Red: Electric.

2. Yellow: Gas, oil, steam, and dangerous materials.

3. Orange: Telephone and other communications.

4. Blue: Water systems.

5. Green: Sewer systems.

PART 3 - EXECUTION

3.1 PREPARATION

A. Protect structures, utilities, sidewalks, pavements, and other facilities from damage caused by settlement, lateral movement, undermining, washout, and other hazards created by earthwork operations.

B. Preparation of Subgrade for earthwork operations including removal of vegetation, topsoil, debris, obstructions, and deleterious materials from ground surface is specified in Section 02210 - SITE CLEARING.

C. Protect and maintain erosion and sedimentation controls, which are specified in Section 02210 - SITE CLEARING, during earthwork operations.

D. Provide protective insulating materials to protect subgrades and foundation soils against freezing temperatures or frost.

3.2 DEWATERING

A. Prevent surface water and ground water from entering excavations, from ponding on prepared subgrades, and from flooding Project site and surrounding area. Dispose of contaminated water in accordance with regulations of authorities having jurisdiction.

B. Protect subgrades from softening, undermining, washout, and damage by rain or water accumulation.

1. Reroute surface water runoff away from excavated areas. Do not allow water to accumulate in excavations. Do not use excavated trenches as temporary drainage ditches.

2. Install a dewatering system to keep subgrades dry and convey ground water away from excavations. Maintain until dewatering is no longer required.

3.3 EXPLOSIVES

A. Explosives: Do not use explosives.

3.4 EXCAVATION, GENERAL

A. Unclassified Excavation: Excavate to Subgrade elevations regardless of the character of surface and subsurface conditions encountered. Unclassified excavated materials may include rock, soil materials, and obstructions. No changes in the Contract Sum or the Contract Time will be authorized for rock excavation or removal of obstructions.

1. If excavated materials intended for fill and backfill include unsatisfactory soil materials and rock, replace with satisfactory soil materials.

2. Remove rock to lines and grades indicated to permit installation of permanent construction without exceeding the following dimensions:

a. 24 inches outside of concrete forms other than at footings.

b. 12 inches outside of concrete forms at footings.

c. 6 inches outside of minimum required dimensions of concrete cast against grade.

d. Outside dimensions of concrete walls indicated to be cast against rock without forms or exterior waterproofing treatments.

e. 6 inches beneath bottom of concrete slabs on grade.

f. 6 inches beneath pipe in trenches, and the greater of 24 inches wider than pipe or 42 inches wide.

3.5 EXCAVATION FOR STRUCTURES

A. Excavate to indicated elevations and dimensions within a tolerance of plus or minus 1 inch. If applicable, extend excavations a sufficient distance from structures for placing and removing concrete formwork, for installing services and other construction, and for inspections.

1. Excavations for Footings and Foundations: Do not disturb bottom of excavation. Excavate by hand to final grade just before placing concrete reinforcement. Trim bottoms to required lines and grades to leave solid base to receive other work.

2. Excavation for Underground Tanks, Basins, and Mechanical or Electrical Utility Structures: Excavate to elevations and dimensions indicated within a tolerance of plus or minus 1 inch. Do not disturb bottom of excavations intended as bearing surfaces.

3.6 EXCAVATION FOR WALKS AND PAVEMENTS

A. Excavate surfaces under walks and pavements to indicated lines, cross sections, elevations, and subgrades.

3.7 EXCAVATION FOR UTILITY TRENCHES

A. Excavate trenches to indicated gradients, lines, depths, and elevations.

1. Beyond building perimeter, excavate trenches to allow installation of top of pipe below frost line.

B. Excavate trenches to uniform widths to provide the following clearance on each side of pipe or conduit. Excavate trench walls vertically from trench bottom to 12 inches higher than top of pipe or conduit, unless otherwise indicated.

1. Clearance: 12 inches each side of pipe or conduit.

C. Trench Bottoms: Excavate and shape trench bottoms to provide uniform bearing and support of pipes and conduit. Shape subgrade to provide continuous support for bells, joints, and barrels of pipes and for joints, fittings, and bodies of conduits. Remove projecting stones and sharp objects along trench subgrade.

1. For pipes and conduit less than 6 inches in nominal diameter and flat-bottomed, multiple-duct conduit units, hand-excavate trench bottoms and support pipe and conduit on an undisturbed subgrade.

2. For pipes and conduit 6 inches or larger in nominal diameter, shape bottom of trench to support bottom 90 degrees of pipe circumference. Fill depressions with tamped sand backfill.

3. Excavate trenches 6 inches deeper than elevation required in rock or other unyielding bearing material to allow for bedding course.

3.8 SUBGRADE INSPECTION

A. Notify Architect when excavations have reached required subgrade.

B. If Architect determines that unsatisfactory soil is present, continue excavation and replace with compacted backfill or fill material as directed.

C. Proof-roll subgrade below the building slabs and pavements with heavy pneumatic-tired equipment to identify soft pockets and areas of excess yielding. Do not proof-roll wet or saturated subgrades.

1. Completely proof-roll subgrade in one direction, repeating proof-rolling in direction perpendicular to first direction. Limit vehicle speed to 3 mph.

2. Proof-roll with a loaded 10-wheel, tandem-axle dump truck weighing not less than 15 tons.

3. Excavate soft spots, unsatisfactory soils, and areas of excessive pumping or rutting, as determined by Architect, and replace with compacted backfill or fill as directed.

D. Reconstruct subgrades damaged by freezing temperatures, frost, rain, accumulated water, or construction activities, as directed by Architect, without additional compensation.

3.9 UNAUTHORIZED EXCAVATION

A. Fill unauthorized excavation under foundations or wall footings by extending bottom elevation of concrete foundation or footing to excavation bottom, without altering top elevation. Lean concrete fill, with 28-day compressive strength of 2500 psi may be used when approved by Architect.

1. Fill unauthorized excavations under other construction or utility pipe as directed by Architect.

3.10 STORAGE OF SOIL MATERIALS

A. Stockpile borrow soil materials and excavated satisfactory soil materials without intermixing. Place, grade, and shape stockpiles to drain surface water. Cover to prevent windblown dust.

1. Stockpile soil materials away from edge of excavations. Do not store within drip line of remaining trees.

3.11 BACKFILL

A. Place and compact backfill in excavations promptly, but not before completing the following:

1. Construction below finish grade including, where applicable, subdrainage, damp proofing, waterproofing, and perimeter insulation.

2. Surveying locations of underground utilities for Record Documents.

3. Testing and inspecting underground utilities.

4. Removing concrete formwork.

5. Removing trash and debris.

6. Removing temporary shoring and bracing, and sheeting.

7. Installing permanent or temporary horizontal bracing on horizontally supported walls.

B. Place backfill on subgrades free of mud, frost, snow, or ice.

3.12 UTILITY TRENCH BACKFILL

A. Place backfill on subgrades free of mud, frost, snow, or ice.

B. Place and compact bedding course on trench bottoms and where indicated. Shape bedding course to provide continuous support for bells, joints, and barrels of pipes and for joints, fittings, and bodies of conduits.

C. Backfill trenches excavated under footings and within 18 inches of bottom of footings with satisfactory soil; fill with concrete to elevation of bottom of footings. Concrete is specified in Section 03300 - CAST-IN-PLACE CONCRETE.

D. Provide 4-inch thick, concrete-base slab support for piping or conduit less than 30 inches below surface of roadways. After installing and testing, completely encase piping or conduit in a minimum of 4 inches of concrete before backfilling or placing roadway subbase.

E. Place and compact initial backfill of subbase material free of particles larger than 1 inch in any dimension, to a height of 12 inches over the utility pipe or conduit.

1. Carefully compact initial backfill under pipe haunches and compact evenly up on both sides and along the full length of utility piping or conduit to avoid damage or displacement of piping or conduit. Coordinate backfilling with utilities testing.

F. Backfill voids with satisfactory soil while installing and removing shoring and bracing.

G. Place and compact final backfill of satisfactory soil to final subgrade elevation.

H. Install warning tape directly above utilities, 12 inches below finished grade, except 6 inches below subgrade under pavements and slabs.

3.13 SOIL FILL

A. Plow, scarify, bench, or break up sloped surfaces steeper than 1 vertical to 4 horizontal so fill material will bond with existing material.

B. Place and compact fill material in layers to required elevations as follows:

1. Under grass and planted areas, use satisfactory soil material.

2. Under walks and pavements, use satisfactory soil material.

3. Under steps and ramps, use engineered fill.

4. Under building slabs, use engineered fill.

5. Under footings and foundations, use engineered fill.

C. Place soil fill on subgrades free of mud, frost, snow, or ice.

3.14 SOIL MOISTURE CONTROL

A. Uniformly moisten or aerate subgrade and each subsequent fill or backfill soil layer before compaction to within 2 percent of optimum moisture content.

1. Do not place backfill or fill soil material on surfaces that are muddy, frozen, or contain frost or ice.

2. Remove and replace, or scarify and air dry otherwise satisfactory soil material that exceeds optimum moisture content by 2 percent and is too wet to compact to specified dry unit weight.

3.15 COMPACTION OF SOIL BACKFILLS AND FILLS

A. Place backfill and fill soil materials in layers not more than 8 inches in loose depth for material compacted by heavy compaction equipment, and not more than 4 inches in loose depth for material compacted by hand-operated tampers.

B. Place backfill and fill soil materials evenly on all sides of structures to required elevations, and uniformly along the full length of each structure.

C. Compact soil materials to not less than the following percentages of maximum dry unit weight according to ASTM D 1557:

1. Under structures, building slabs, steps, and pavements, scarify and re-compact top 12 inches of existing subgrade and each layer of backfill or fill soil material at 95 percent, and areas within 10 feet of structures, building slabs, steps, and pavements at 92 percent.

2. Under walkways, scarify and re-compact top 6 inches below subgrade and compact each layer of backfill or fill soil material at 92 percent.

3. Under lawn or unpaved areas, scarify and re-compact top 6 inches below subgrade and compact each layer of backfill or fill soil material at 85 percent.

4. For utility trenches, compact each layer of initial and final backfill soil material at 85 percent.

3.16 GRADING

A. General: Uniformly grade areas to a smooth surface free of irregular surface changes. Comply with compaction requirements and grade to cross sections, lines, and elevations indicated.

1. Provide a smooth transition between adjacent existing grades and new grades.

2. Cut out soft spots, fill low spots, and trim high spots to comply with required surface tolerances.

B. Site Grading: Slope grades to direct water away from buildings and to prevent ponding. Finish subgrades to required elevations within the following tolerances:

1. Lawn or Unpaved Areas: Plus or minus 1 inch.

2. Walks: Plus or minus 1 inch.

3. Pavements: Plus or minus 1/2 inch.

C. Grading inside Building Lines: Finish subgrade to a tolerance of 1/2 inch when tested with a 10 foot straightedge.

3.17 SUBSURFACE DRAINAGE

A. Subdrainage Pipe: Specified in Division 2 Section “Subdrainage.”

B. Subsurface Drain: Place subsurface drainage geotextile around perimeter of subdrainage trench. Place a 6 inch course of filter material on subsurface drainage geotextile to support subdrainage pipe. Encase subdrainage pipe in a minimum of 12 inches of filter material, placed in compacted layers 6 inches thick, and wrap in subsurface drainage geotextile, overlapping sides and ends at least 6 inches.

1. Compact each filter material layer to 85 percent of maximum dry unit weight according to ASTM D 1557.

C. Drainage Backfill: Place and compact filter material over subsurface drain, in width indicated, to within 12 inches of final subgrade in compacted layers 6 inches thick. Overlay drainage backfill with 1 layer of subsurface drainage geotextile, overlapping sides and ends at least 6 inches.

1. Compact each filter material layer to 85 percent of maximum dry unit weight according to ASTM D 1557.

2. Place and compact impervious fill over drainage backfill in 6-inch-thick compacted layers to final subgrade.

3.18 SUBBASE AND BASE COURSES

A. Place subbase and base course on subgrades free of mud, frost, snow, or ice.

B. On prepared subgrade, place subbase and base course under pavements and walks as follows:

1. Install separation geotextile on prepared subgrade according to manufacturer's written instructions, overlapping sides and ends.

2. Place base course material over subbase course under hot-mix asphalt pavement.

3. Shape subbase and base course to required crown elevations and cross-slope grades.

4. Place subbase and base course 6 inches or less in compacted thickness in a single layer.

5. Place subbase and base course that exceeds 6 inches in compacted thickness in layers of equal thickness, with no compacted layer more than 6 inches thick or less than 3 inches thick.

6. Compact subbase and base course at optimum moisture content to required grades, lines, cross sections, and thickness to not less than 95 percent of maximum dry unit weight according to ASTM D 1557.

C. Pavement Shoulders: Place shoulders along edges of subbase and base course to prevent lateral movement. Construct shoulders, at least 12 inches wide, of satisfactory soil materials and compact simultaneously with each subbase and base layer to not less than 95 percent of maximum dry unit weight according to ASTM D 1557.

3.19 DRAINAGE COURSE

A. Place drainage course on subgrades free of mud, frost, snow, or ice.

B. On prepared subgrade, place and compact drainage course under cast-in-place concrete slabs-on-grade as follows:

1. Install subdrainage geotextile on prepared subgrade according to manufacturer's written instructions, overlapping sides and ends.

2. Compact each layer of drainage course to required cross sections and thicknesses to not less than 95 percent of maximum dry unit weight according to ASTM D 1557.

3.20 FIELD QUALITY CONTROL

A. Testing Agency: Engage a qualified independent geotechnical engineering testing agency to perform field quality control testing.

B. Allow testing agency to inspect and test subgrades and each fill or backfill layer. Proceed with subsequent earthwork only after test results for previously completed work comply with requirements.

C. Footing Subgrade: At footing subgrades, at least one test of each soil stratum will be performed to verify design-bearing capacities. Subsequent verification and approval of other footing subgrades may be based on a visual comparison of subgrade with tested subgrade when approved by Architect.

D. Testing agency will test compaction of soils in place according to ASTM D 1556, ASTM D 2167, ASTM D 2922, and ASTM D 2937, as applicable. Tests will be performed at the following locations and frequencies:

1. Paved and Building Slab Areas: At subgrade and at each compacted fill and backfill layer, at least 1 test for every 2000 sq. ft. or less of paved area or building slab, but in no case fewer than 3 tests.

2. Foundation Wall Backfill: At each compacted backfill layer, at least 1 test for each 100 feet or less of wall length, but no fewer than 2 tests.

3. Trench Backfill: At each compacted initial and final backfill layer, at least 1 test for each 150 feet or less of trench length, but no fewer than 2 tests.

E. When testing agency reports that subgrades, fills, or backfills have not achieved degree of compaction specified, scarify and moisten or aerate, or remove and replace soil to depth required; re-compact and retest until specified compaction is obtained.

3.21 PROTECTION

A. Protecting Graded Areas: Protect newly graded areas from traffic, freezing, and erosion. Keep free of trash and debris.

B. Repair and reestablish grades to specified tolerances where completed or partially completed surfaces become eroded, rutted, settled, or where they lose compaction due to subsequent construction operations or weather conditions.

1. Scarify or remove and replace soil material to depth as directed by Architect; reshape and re-compact.

C. Where settling occurs before Project correction period elapses, remove finished surfacing, backfill with additional soil material, compact, and reconstruct surfacing.

1. Restore appearance, quality, and condition of finished surfacing to match adjacent work, and eliminate evidence of restoration to greatest extent possible.

3.22 DISPOSAL OF SURPLUS AND WASTE MATERIALS

A. Disposal: Remove surplus satisfactory soil and waste material, including unsatisfactory soil, trash, and debris, and legally dispose of it off the Owner's property.

END OF SECTION

SECTION 02 41 19
SELECTIVE STRUCTURE DEMOLITION

PART 1 GENERAL

1.1 SECTION INCLUDES

A. Examination of areas.
B. Utility services and mechanical/electrical systems.
C. Preparation.
D. General selective demolition procedures.
E. Demolition and removal of selected portions of building or structure.
F. Disposal of demolished materials.
G. Cleaning.
H. Schedule of selective demolition.

1.2 RELATED SECTIONS

A. Division 01 Sections – General Requirements.

1.3 REFERENCES

A. ANSI/ASSE A10.6 – Safety Requirements for Demolition Operations.
B. 40 CFR 82 – Protection of Stratospheric Ozone.
C. OSHA - Standards for the Construction Industry (29 CFR Part 1926).
D. NFPA 241 – Safeguarding Construction, Alteration, and Demolition Operation.

1.4 DEFINITIONS

A. Remove: Detach items from existing construction and legally dispose of them off-site unless indicated to be removed and salvaged or removed and reinstalled.
B. Remove and Salvage: Carefully detach from existing construction, in a manner to prevent damage, and deliver to Owner Representative ready for reuse.
C. Remove and Reinstall: Detach items from existing construction, prepare for reuse, and reinstall where indicated.
D. Existing to Remain: Existing items of construction that are not to be permanently removed and that are not otherwise indicated to be removed, removed and salvaged, or removed and reinstalled.
E. Relocation: Existing item to be removed and relocated to a different location within the

project.

1.5 MATERIALS OWNERSHIP

A. Unless otherwise indicated, demolition waste becomes property of Contractor.

1.6 PREINSTALLATION MEETINGS

A. Predemolition Conference: Conduct conference at Project site.
   1. Inspect and discuss condition of construction to be selectively demolished.
   2. Review structural load limitations of existing structure.
   3. Review and finalize selective demolition schedule and verify availability of materials, demolition personnel, equipment, and facilities needed to make progress and avoid delays.
   4. Review requirements of work performed by other trades that rely on substrates exposed by selective demolition operations.
   5. Review areas where existing construction is to remain and requires protection.

1.7 INFORMATIONAL SUBMITTALS

A. Section 01340 – Submittal Procedures.
B. Proposed Protection Measures: Submit report, including drawings, that indicates the measures proposed for protecting individuals and property, for environmental protection, for dust control and for noise control. Indicate proposed locations and construction of barriers.
C. Schedule of Selective Demolition Activities: Indicate the following:
   1. Coordinate with Construction Duration and Phasing, for sequencing of demolition activities. Detailed sequence of selective demolition and removal work, with starting and ending dates for each activity.
   2. Interruption of utility services. Indicate how long utility services will be interrupted.
   3. Coordination for shutoff, capping, and continuation of utility services.
   4. Use of elevator and stairs.
   5. Coordination of Owner’s continuing occupancy of adjacent buildings.
D. Inventory: Submit a list of items to be removed and salvaged and deliver to Owner Representative prior to start of demolition.
E. Predemolition Photographs or Video: Submit before Work begins.

F. Warranties: Documentation indicated that existing warranties are still in effect after completion of selective demolition.

1.8 CLOSEOUT SUBMITTALS

A. Section 01340 – Submittal Procedures.
B. Inventory: Submit a list of items that have been removed and salvaged.
C. Landfill Records: Indicate receipt and acceptance of hazardous wastes by a landfill facility licensed to accept hazardous wastes.
D. Recycled Receipts: Receipts of recycled materials with volume or weight details.

1.9 FIELD CONDITIONS

A. Construct temporary insulated dust-proof partitions where required to separate areas where noisy or extensive dirt or dust operations are performed. Equip partitions with dustproof doors and security locks.
B. Conditions existing at time of inspection for bidding purpose will be maintained by Owner as far as practical.
C. Notify Architect-Engineer of discrepancies between existing conditions and Drawings before proceeding with selective demolition.
D. Storage or sale of removed items or materials on-site is not permitted.
E. Utility Service: Maintain existing utilities indicated to remain in service and protect them against damage during selective demolition operations.

PART 2 - PRODUCTS

2.1 PERFORMANCE REQUIREMENTS

A. Erect and maintain dust-proof partitions and closures as required to prevent spread of dust or fumes to occupied portions of the building. Coordinate demolition activities with IAQ Plan During Construction required in section 01 81 19 – Indoor Air Quality Requirements.

B. Equip partitions with dust proof doors and security locks if required.





C. Regulatory Requirements: Comply with governing EPA notification regulations before beginning selective demolition. Comply with hauling and disposal regulations of authorities having jurisdiction.
D. Standards: Comply with ANSI/ASSE A10.6 and NFPA 241.
E. Contractors performing hot work (welding, cutting, soldering, brazing, other) shall comply with OSHA's requirements (29 CFR 1926.352, Fire Prevention for Welding and Cutting) and implement hot work programs including the use of a written hot work permit.

PART 3 - EXECUTION

3.1 EXAMINATION

A. Verify that utilities have been disconnected and capped before starting selective demolition operations.
B. Owner does not guarantee that existing conditions are same as those indicated in record documents.
C. Survey existing conditions and correlate with requirements indicated to determine extent of selective demolition required.
D. When unanticipated mechanical, electrical, or structural elements that conflict with intended function or design are encountered, investigate and measure the nature and extent of conflict. Promptly submit a written report to Architect-Engineer.
E. Perform an engineering survey of condition of building to determine whether removing any element might result in structural deficiency or unplanned collapse of any portion of structure or adjacent structures during selective building demolition operations.

1. Perform surveys as the Work progresses to detect hazards resulting from selective demolition activities.

F. Survey of Existing Conditions: Record existing conditions by use of preconstruction photographs or preconstruction videotapes.
   1. Inventory and record the condition of items to be removed and salvaged. Provide photographs or video of conditions that might be misconstrued as damage caused by salvage operations.

3.2 UTILITY SERVICES AND MECHANICAL/ELECTRICAL SYSTEMS

A. Existing Services/Systems to Be Removed, Relocated, or Abandoned: Locate, identify, disconnect, and seal or cap off indicated utility services and mechanical/electrical systems serving areas to be selectively demolished.
   1. Owner and/or Building manager will arrange to shut off indicated services/systems when requested by Contractor.
   2. Arrange to shut off indicated utilities with utility companies.
   3. If services/systems are required to be removed, relocated, or abandoned, provide temporary services/systems that bypass area of selective demolition and that maintain continuity of services/systems to other parts of building.
   4. Disconnect, demolish, and remove systems, equipment, and components indicated to be removed.
      a. Piping to Be Removed: Remove portion of piping indicated to be removed and cap or plug remaining piping with same or compatible piping material.
      b. Piping to Be Abandoned in Place: Drain piping and cap or plug piping with same or compatible piping material.
      c. Equipment to Be Removed: Disconnect and cap services and remove equipment.
      d. Equipment to Be Removed and Reinstalled: Disconnect and cap services and remove, clean, and store equipment; when appropriate, reinstall, reconnect, and make equipment operational.
      e. Equipment to Be Removed and Salvaged: Disconnect and cap services and

remove equipment and deliver to Owner.

3.3 PREPARATION

A. Site Access and Temporary Controls: Conduct selective demolition and debris-removal operations to ensure minimum interference with roads, streets, walks, walkways, and other adjacent occupied and used facilities.

B. Temporary Facilities: Provide temporary barricades and other protection required to prevent injury to people and damage to adjacent buildings and facilities to remain.

1. Provide protection to ensure safe passage of people around selective demolition area and to and from occupied portions of building.
2. Provide temporary weather protection, during interval between selective demolition of existing construction on exterior surfaces and new construction, to prevent water leakage and damage to structure and interior areas.
3. Protect walls, ceilings, floors, and other existing finish work that are to remain or that are exposed during selective demolition operations.
4. Cover and protect furniture, furnishings, and equipment that have not been removed.
5. Comply with all code and regulations for temporary enclosures and dust control.

6. Strengthen or add new supports when required during progress of selective demolition.

3.4 SELECTIVE DEMOLITION, GENERAL

A. General: Demolish and remove existing construction only to the extent required as indicated. Use methods required to complete the Work within limitations of governing regulations and as follows:

1. Proceed with selective demolition systematically, from higher to lower level. Complete selective demolition operations above each floor or tier before disturbing supporting members on the next lower level.
2. Neatly cut openings and holes plumb, square, and true to dimensions required. Use cutting methods least likely to damage construction to remain or adjoining construction. Use hand tools or small power tools designed for sawing or grinding, not hammering and chopping, to minimize disturbance of adjacent surfaces. Temporarily cover openings to remain.

3. Cut or drill from the exposed or finished side into concealed surfaces to avoid marring existing finished surfaces.
4. Do not use cutting torches until work area is cleared of flammable materials. At concealed spaces, such as duct and pipe interiors, verify condition and contents of hidden space before starting flame-cutting operations. Maintain fire watch and portable fire-suppression devices during flame-cutting operations.
5. Maintain adequate ventilation when using cutting torches.
6. Remove decayed, vermin-infested, or otherwise dangerous or unsuitable materials and promptly dispose of off-site.
7. Remove structural framing members and lower to ground by method suitable to avoid free fall and to prevent ground impact or dust generation.
8. Locate selective demolition equipment and remove debris and materials so as not to impose excessive loads on supporting walls, floors, or framing.
9. Dispose of demolished items and materials promptly. Comply with all codes and regulations.

B. Existing Items to Remain: Protect construction indicated to remain against damage and soiling during selective demolition. When permitted by Architect-Engineer, items may be removed to a suitable, protected storage location during selective demolition and cleaned and reinstalled in their original locations after selective demolition operations are complete.

3.5 SELECTIVE DEMOLITION PROCEDURES FOR SPECIFIC MATERIALS

A. Concrete: Demolish in small sections. Using power-driven saw, cut concrete to a depth of at least 3/4 inch at junctures with construction to remain. Dislodge concrete from reinforcement at perimeter of areas being demolished, cut reinforcement, and then remove remainder of concrete. Neatly trim openings to dimensions indicated.
B. Masonry: Demolish in small sections. Cut masonry at junctures with construction to remain, using power-driven saw, then remove masonry between saw cuts.
C. Windows, Doors and Frames: Remove as units, complete with trim and accessories. Repair edges of openings as required.

3.6 DISPOSAL OF DEMOLISHED MATERIALS

A. General: Except for items or materials indicated to be recycled, reused, salvaged, reinstalled, or otherwise indicated to remain Owner’s property, remove demolished

materials from Project site and legally dispose of them in an EPA-approved landfill.

1. Do not allow demolished materials to accumulate on-site.
2. Remove and transport debris in a manner that will prevent spillage on adjacent surfaces and areas.
3. Remove debris from elevated portions of building by chute, hoist, or other device that will convey debris to grade level in a controlled descent.
4. Comply with requirements specified in Section 01 74 19.

B. Burning: Do not burn demolished materials.

C. Disposal: Transport demolished materials off Owner's property and legally disposes of them.

3.7 CLEANING

A. Clean adjacent structures and improvements of dust, dirt, and debris caused by selective demolition operations.

B. Leave building in broom condition.

C. Return adjacent areas to condition existing before selective demolition operations began.

3.8 SCHEDULE OF SELECTIVE DEMOLITION

A. Coordinate with requirements for construction phasing as Contract Documents.

END OF SECTION

SECTION 03 30 00
CAST-IN-PLACE CONCRETE

PART 1 - GENERAL

1.1 RELATED DOCUMENTS

A. Drawings and general provisions of the Contract, including General and Supplementary Conditions and Division 1 Specification Sections, apply to this Section.

1.2 SUMMARY

A. This Section specifies cast-in place concrete, including formwork, reinforcement, concrete materials, mix design, placement procedures, and finishes.

B. Related Sections include the following:

1. Division 2 Section "Cement Concrete Pavement" for concrete pavement and walks.

2. Division 3 Section "Concrete Toppings" for metallic and nonmetallic concrete floor toppings.

1.3 DEFINITIONS

A. Cementitious Materials: Portland cement alone or in combination with one or more of blended hydraulic cement, fly ash and other pozzolans, ground granulated blast-furnace slag, and silica fume.

1.4 SUBMITTALS

A. Product Data: For each type of manufactured material and product indicated.

B. Design Mixes: For each concrete mix. Include alternate mix designs when characteristics of materials, project conditions, weather, test results, or other circumstances warrant adjustments.

1. Indicate amounts of mix water to be withheld for later addition at Project site.

C. Steel Reinforcement Shop Drawings: Details of fabrication, bending, and placement, prepared according to ACI 315, "Details and Detailing of Concrete Reinforcement." Include material, grade, bar schedules, stirrup spacing, bent bar diagrams, arrangement, and supports of concrete reinforcement. Include special reinforcement required for openings through concrete structures.

D. Postensioning steel cables Shop Drawings: Details of fabrications and placement

E. Formwork Shop Drawings: Prepared by or under the supervision of a qualified professional engineer de- tailing fabrication, assembly, and support of formwork. Design and engineering of formwork are Contractor's responsibility.

1. Shoring and Reshoring: Indicate proposed schedule and sequence of stripping formwork, shoring removal, and installing and removing reshoring.

F. Welding Certificates: Copies of certificates for welding procedures and personnel.

G. Material Certificates: Signed by manufacturers certifying that each of the following items complies with requirements:

1. Cementitious materials and aggregates.

2. Form materials and form-release agents.

3. Steel reinforcement and reinforcement accessories.

4. Fiber reinforcement.

5. Admixtures.

6. Waterstops.

7. Curing materials.

8. Floor and slab treatments.

9. Bonding agents.

10. Adhesives.

11. Vapor retarders.

12. Epoxy joint filler.

13. Joint-filler strips.

14. Repair materials.

H. Minutes of preinstallation conference.

1.5 QUALITY ASSURANCE

A. Installer Qualifications: An experienced installer who has completed concrete Work similar in material, de- sign, and extent to that indicated for this Project and whose work has resulted in construction with a record of successful in-service performance.

B. Professional Engineer Qualifications: A professional engineer who is legally qualified to practice in juris- diction where Project is located and who is experienced in providing engineering services of the kind indicated. Engineering services are defined as those performed for formwork and shoring and reshoring installations that are similar to those indicated for this Project in material, design, and extent.

C. Manufacturer Qualifications: A firm experienced in manufacturing ready-mixed concrete products complying with ASTM C 94 requirements for production facilities

and equipment.

1. Manufacturer must be certified according to the National Ready Mixed Concrete Association's Certification of Ready Mixed Concrete Production Facilities.

D. Testing Agency Qualifications: An independent testing agency, acceptable to authorities having jurisdiction, qualified according to ASTM C 1077 and ASTM E 329 to conduct the testing indicated, as document- ed according to ASTM E 548.

1. Personnel conducting field tests shall be qualified as ACI Concrete Field Testing Technician, Grade 1, according to ACI CP-1 or an equivalent certification program.

E. Source Limitations: Obtain each type or class of cementitious material of the same brand from the same manufacturer's plant, each aggregate from one source, and each admixture from the same manufacturer.

F. Welding: Qualify procedures and personnel according to AWS D1.4, "Structural Welding Code-- Reinforcing Steel."

G. ACI Publications: Comply with the following, unless more stringent provisions are indicated:

1. ACI 301, "Specification for Structural Concrete."

2. ACI 117, "Specifications for Tolerances for Concrete Construction and Materials."

H. Preinstallation Conference: Conduct conference at Project site to comply with requirements in Division 1 Section "Project Meetings."

1. Before submitting design mixes, review concrete mix design and examine procedures for ensuring quality of concrete materials. Require representatives of each entity directly concerned with cast- in-place concrete to attend, including the following:

a. Contractor's superintendent.

b. Independent testing agency responsible for concrete design mixes.

c. Ready-mix concrete producer.

d. Concrete subcontractor.

1.6. DELIVERY, STORAGE, AND HANDLING

A. Deliver, store, and handle steel reinforcement to prevent bending and damage.

B. Avoid damaging coatings on steel reinforcement.

C. Repair damaged epoxy coatings on steel reinforcement according to ASTM D 3963/D

3963M.

PART 2 - PRODUCTS

2.1 FORM-FACING MATERIALS

A. Smooth-Formed Finished Concrete: Form-facing panels that will provide continuous, true, and smooth concrete surfaces. Furnish in largest practicable sizes to minimize number of joints.

1. Plywood, metal, or other approved panel materials.

2. Exterior-grade plywood panels, suitable for concrete forms, complying with DOC PS 1, and as follows:

a. Medium-density overlay, Class 1, or better, mill-release agent treated and edge sealed.

B. Rough-Formed Finished Concrete: Plywood, lumber, metal, or another approved material. Provide lumber dressed on at least two edges and one side for tight fit.

C. Forms for Cylindrical Columns, Pedestals, and Supports: Metal, glass-fiber-reinforced plastic, paper, or fiber tubes that will produce surfaces with gradual or abrupt irregularities not exceeding specified formwork surface class. Provide units with sufficient wall thickness to resist plastic concrete loads without detrimental deformation.

D. Pan-Type Forms: Glass-fiber-reinforced plastic or formed steel, stiffened to resist plastic concrete loads without detrimental deformation.

E. Void Forms: Biodegradable paper surface, treated for moisture resistance, structurally sufficient to support weight of plastic concrete and other superimposed loads.

F. Chamfer Strips: Wood, metal, PVC, or rubber strips, 3/4 by 3/4 inch (19 by 19 mm), minimum.

G. Form-Release Agent: Commercially formulated form-release agent that will not bond with, stain, or adversely affect concrete surfaces and will not impair subsequent treatments of concrete surfaces.

1. Formulate form-release agent with rust inhibitor for steel form-facing materials.

H. Form Ties: Factory-fabricated, removable or snap-off metal or glass-fiber-reinforced plastic form ties de- signed to resist lateral pressure of fresh concrete on forms and to prevent spalling of concrete on removal.

1. Furnish units that will leave no corrodible metal closer than 1 inch (25 mm) to the plane of the ex- posed concrete surface.

2. Furnish ties that, when removed, will leave holes not larger than 1 inch (25 mm) in diameter in concrete surface.

3. Furnish ties with integral water-barrier plates to walls indicated to receive dampproofing or waterproofing.

2.2 STEEL REINFORCEMENT

A. Reinforcing Bars: ASTM A 615/A 615M, Grade 60 (Grade 420), deformed from U.S. domestic manufacturer only.

B. Low-Alloy-Steel Reinforcing Bars: ASTM A 706/A 706M, deformed from U.S. domestic manufacturer only.

C. Epoxy-Coated Fabricated Reinforcing Bars: ASTM A 934/A 934M, and as follows:

1. Steel Reinforcement: ASTM A 615/A 615M, Grade 60 (Grade 420), deformed form U.S. domestic manufacturer only.

D. Steel Bar Mats: ASTM A 184/A 184M, assembled with clips.

1. Steel Reinforcement: ASTM A 615/A 615M, Grade 60 (Grade 420), deformed bars.

E. Plain-Steel Wire: ASTM A 82, as drawn.

F. Deformed-Steel Wire: ASTM A 496.

G. Epoxy-Coated Wire: ASTM A 884/A 884M, Class A coated, plain-steel wire.

H. Plain-Steel Welded Wire Fabric: ASTM A 185, fabricated from as-drawn steel wire into flat sheets.

I. Deformed-Steel Welded Wire Fabric: ASTM A 497, flat sheet.

J. Epoxy-Coated Welded Wire Fabric: ASTM A 884/A 884M, Class A, plain steel.

2.3 REINFORCEMENT ACCESSORIES

A. Bar Supports: Bolsters, chairs, spacers, and other devices for spacing, supporting, and fastening reinforcing bars and welded wire fabric in place. Manufacture bar supports according to CRSI's "Manual of Standard Practice" from steel wire, plastic, or precast concrete or fiber-reinforced concrete of greater com- pressive strength than concrete, and as follows:

1. For concrete surfaces exposed to view where legs of wire bar support contact forms, use CRSI Class 1 plastic-protected or CRSI Class 2 stainless-steel bar supports.

2. For epoxy-coated reinforcement, use epoxy-coated or other dielectric-polymer-coated wire bar supports.

B. Joint Dowel Bars: Plain-steel bars, ASTM A 615/A 615M, Grade 60 (Grade 420). Cut bars true to length with ends square and free of burrs.

C. Epoxy-Coated Joint Dowel Bars: ASTM A 775/A 775M; with ASTM A 615/A 615M, Grade 60 (Grade 420), plain-steel bars.

D. Epoxy Repair Coating: Liquid, two-part, epoxy repair coating; compatible with epoxy coating on reinforcement and complying with ASTM A 775/A 755M.

E. CONCRETE MATERIALS

Normal-Weight Aggregate: ASTM C 33, uniformly graded, and as follows:

1. Class: Moderate weathering region, but not less than 3M.

2. Nominal Maximum Aggregate Size: 1 inch (25 mm), or as indicated on drawings.

3. Combined Aggregate Gradation: Well graded from coarsest to finest with not more than 18 percent and not less than 8 percent retained on an individual sieve, except that less than 8 percent may be retained on coarsest sieve and on No. 50 (0.3-mm) sieve, and less than 8 percent may be retained on sieves finer than No. 50 (0.3 mm).

F. Lightweight Aggregate: ASTM C 330.

1. Nominal Maximum Aggregate Size: as indicated drawings.

G. Water: Potable and complying with ASTM C 94.

2.4 ADMIXTURES

A. General: Admixtures certified by manufacturer to contain no more than 0.1 percent water-soluble chloride ions by mass of cementitious material and to be compatible with other admixtures and cementitious mate- rials. Do not use admixtures containing calcium chloride.

B. Air-Entraining Admixture: ASTM C 260.

C. Water-Reducing Admixture: ASTM C 494, Type A.

D. High-Range, Water-Reducing Admixture: ASTM C 494, Type F.

E. Water-Reducing and Accelerating Admixture: ASTM C 494, Type E.

F. Water-Reducing and Retarding Admixture: ASTM C 494, Type D.

G. Corrosion-Inhibiting Admixture: When indicated use commercially formulated, anodic inhibitor or mixed cathodic and anodic inhibitor; capable of forming a protective barrier and minimizing chloride reactions with steel reinforcement in concrete.

1. Available Products: Subject to compliance with requirements, products that may be incorporated into the Work include, but are not limited to, the following:

a. DCI or DCI-S; W. R. Grace & Co., Construction Products Div.

b. Rheocrete 222+; Master Builders, Inc.

c. FerroGard-901; Sika Corporation.

2.5 FIBER REINFORCEMENT

A. Carbon-Steel Fiber: ASTM A 820, deformed, minimum 2.4 inches (60 mm) long, and of diameter or effec- tive diameter indicated.

1. Fiber: Type 1, cold-drawn wire, or Type 2, cut sheet.

B. Synthetic Fiber: Fibrillated or monofilament polypropylene fibers engineered and designed for use in con- crete, complying with ASTM C 1116, Type III, 1/2 to 1-1/2 inches (13 to 38 mm) long.

C. Available Products: Subject to compliance with requirements, products that may be incorporated into the Work include, but are not limited to, the following:

1. Carbon-Steel Fibers:

a. Dramix; Bekaert Corporation.

b. Fibercon; Fibercon International.

c. Zorex; Novocon International Inc.

2. Fibrillated Fibers:

a. Fibrasol F; Axim Concrete Technologies.

b. Fibermesh; Fibermesh, Div. of Synthetic Industries.

c. Forta; Forta Corporation.

d. Grace Fibers; W. R. Grace & Co., Construction Products Div.

3. Monofilament Fibers:

a. Fibrasol IIP; Axim Concrete Technologies.

b. Fiberstrand 100; Euclid Chemical Co.

c. Fibermix Stealth; Fibermesh, Div. of Synthetic Industries.

d. Forta Mono; Forta Corporation.

e. Grace MicroFiber; W. R. Grace & Co., Construction Products Div.

f. Hi-Tech PPM Fiber; Hi-Tech Fibers, Div. of Martin Color-Fi, Inc.

g. Polystrand 1000; Metalcrete Industries.

2.6 WATERSTOPS

A. Flexible Rubber Waterstops: CE CRD-C 513, for embedding in concrete to prevent passage of fluids through joints. Factory fabricate corners, intersections, and directional changes.

1. Profile: Ribbed with center bulb or as indicated.

B. Flexible PVC Waterstops: CE CRD-C 572, for embedding in concrete to prevent passage of fluids through joints. Factory fabricate corners, intersections, and directional changes.

1. Profile: Ribbed with center bulb or as indicated.

C. Available Manufacturers: Subject to compliance with requirements, manufacturers offering products that may be incorporated into the Work include, but are not limited to, the following:

1. Rubber Waterstops:

a. Greenstreak.

b. Progress Unlimited Inc.

c. Westec Barrier Technologies; Div. of Western Textile Products, Inc.

d. Williams Products, Inc.

2. PVC Waterstops:

a. Greenstreak.

b. Meadows: W. R. Meadows, Inc.

c. Murphy: Paul Murphy Plastics Co.

d. Progress Unlimited Inc.

e. Sternson Group.

f. Tamms Industries Co.; Div. of LaPorte Construction Chemicals North America, Inc.

g. Vinylex Corporation.

h. Westec Barrier Technologies; Div. of Western Textile Products, Inc.

D. Self-Expanding Strip Waterstops: Manufactured rectangular or trapezoidal strip, sodium bentonite or other hydrophylic material for adhesive bonding to concrete.

1. Available Products: Subject to compliance with requirements, products that may be incorporated into the Work include, but are not limited to, the following:

    a. Volclay Waterstop-RX; Colloid Environmental Technologies Co.

    b. Conseal CS-231; Concrete Sealants Inc.

    c. Swellseal Joint; De Neef Construction Chemicals (U.S.) Inc.

    d. Hydrotite; Greenstreak.

    e. Mirastop; Mirafi Moisture Protection, Div. of Royal Ten Cate (USA), Inc.

    f. Adeka Ultra Seal; Mitsubishi International Corporation.

    g. Superstop; Progress Unlimited Inc.

2.7 VAPOR RETARDERS

A. Vapor Retarder: ASTM E 1745, Class C, of one of the following materials; or polyethylene sheet, ASTM D 4397, not less than 10 mils (0.25 mm) thick:

1. Nonwoven, polyester-reinforced, polyethylene coated sheet; 10 mils (0.25 mm) thick.

2. Three-ply, nylon- or polyester-cord-reinforced, laminated, high-density polyethylene sheet; 7.8 mils (0.18 mm) thick.

3. Available Product: Subject to compliance with requirements, a product that may be incorporated into the Work includes, but is not limited to, "Griffolyn T-85" by Reef Industries Inc.

B. Fine-Graded Granular Material: When indicated on drawings use clean mixture of crushed stone, crushed gravel, and manufactured or natural sand; ASTM D 448, Size 10, with 100 percent passing a No. 4 (4.75- mm) sieve and 10 to 30 percent passing a No. 100 (0.15-mm) sieve; meeting deleterious substance limits of ASTM C 33 for fine aggregates.

C. Granular Fill: When indicated on drawings use clean mixture of crushed stone or crushed or uncrushed gravel; ASTM D 448, Size 57, with 100 percent passing a 1-1/2-inch (38-mm) sieve and 0 to 5 percent passing a No. 8 (2.36-mm) sieve.

2.8 FLOOR AND SLAB TREATMENTS

A. Slip-Resistive Aggregate Finish: Factory-graded, packaged, rustproof, nonglazing, abrasive aggregate of fused aluminum-oxide granules or crushed emery with emery aggregate containing not less than 50 per- cent aluminum oxide and not less than 25 percent ferric oxide; unaffected by freezing, moisture, and cleaning materials.

B. Unpigmented Mineral Dry-Shake Floor Hardener: Factory-packaged dry combination of Portland cement, graded quartz aggregate, and plasticizing

admixture.

C. Pigmented Mineral Dry-Shake Floor Hardener: Factory-packaged dry combination of Portland cement, graded quartz aggregate, coloring pigments, and plasticizing admixture. Use coloring pigments that are finely ground, nonfading mineral oxides interground with cement.

1. Colors: As indicated by referencing manufacturer's designations.

D. Penetrating Liquid Floor Treatment: Chemically reactive, waterborne solution of inorganic silicate or siliconate materials and proprietary components; odorless; colorless; that penetrates, hardens, and densifies concrete surfaces.

E. Available Products: Subject to compliance with requirements, products that may be incorporated into the Work include, but are not limited to, the following:

1. Unpigmented Mineral Dry-Shake Floor Hardener:

a. Non-Metallic Floor Hardener; Burke Group, LLC (The).

b. Concolor; ChemMasters.

c. Conshake 500; Conspec Marketing & Manufacturing Co., Inc.

d. Quartz Tuff; Dayton Superior Corporation.

e. Surflex; Euclid Chemical Co.

f. Tycron; Kaufman Products, Inc.

g. Colorhard; Lambert Corporation.

h. Quartzplate; L&M Construction Chemicals, Inc.

i. Maximent; Master Builders, Inc.

j. Floor Quartz; Metalcrete Industries.

k. Hard Top; Richmond Screw Anchor Co.

l. Lithochrome Color Hardener; L. M. Scofield Co.

m. Harcol; Sonneborn, Div. of ChemRex, Inc.

n. Durag Premium; Sternson Group.

o. Hard Top; Symons Corporation.

2. Pigmented Mineral Dry-Shake Floor Hardener:

a. Non-Metallic Floor Hardener; Burke Group, LLC (The).

b. Concolor; ChemMasters.

c. Conshake 600; Conspec Marketing & Manufacturing Co., Inc.

d. Quartz Tuff; Dayton Superior Corporation.

e. Surflex; Euclid Chemical Co.

f. Tycron; Kaufman Products, Inc.

g. Colorhard; Lambert Corporation.

h. Quartzplate; L&M Construction Chemicals, Inc.

i. Maximent; Master Builders, Inc.

j. Floor Quartz; Metalcrete Industries.

k. Lithochrome Color Hardener; L. M. Scofield Co.

l. Harcol; Sonneborn, Div. of ChemRex, Inc.

m. Colorplete; Sternson Group.

3. Penetrating Liquid Floor Treatment:

a. Titan Hard; Burke Group, LLC (The).

b. Chemisil Plus; ChemMasters.

c. Intraseal; Conspec Marketing & Manufacturing Co., Inc.

d. Ashford Formula; Curecrete Chemical Co., Inc.

e. Day-Chem Sure Hard; Dayton Superior Corporation.

f. Euco Diamond Hard; Euclid Chemical Co.

g. Seal Hard; L&M Construction Chemicals, Inc.

h. Vexcon Starseal PS; Vexcon Chemicals, Inc.

2.9 CURING MATERIALS

A. Evaporation Retarder: Waterborne, monomolecular film forming, manufactured for application to fresh concrete.

B. Absorptive Cover: AASHTO M 182, Class 2, burlap cloth made from jute or kenaf, weighing approximately 9 oz./sq. yd. (305 g/sq. m) dry.

C. Moisture-Retaining Cover: ASTM C 171, polyethylene film or white burlap-polyethylene sheet.

D. Water: Potable.

E. Clear, Waterborne, Membrane-Forming Curing Compound: ASTM C 309, Type 1, Class B.

F. Clear, Waterborne, Membrane-Forming Curing Compound: ASTM C 309, Type 1, Class B, 18 to 22 per- cent solids.

G. Available Products: Subject to compliance with requirements, products that may be incorporated into the Work include, but are not limited to, the following:

1. Evaporation Retarder:

a. Cimfilm; Axim Concrete Technologies.

b. Finishing Aid Concentrate; Burke Group, LLC (The).

c. Spray-Film; ChemMasters.

d. Aquafilm; Conspec Marketing & Manufacturing Co., Inc.

e. Sure Film; Dayton Superior Corporation.

f. Eucobar; Euclid Chemical Co.

g. Vapor Aid; Kaufman Products, Inc.

h. Lambco Skin; Lambert Corporation.

i. E-Con; L&M Construction Chemicals, Inc.

j. Confilm; Master Builders, Inc.

k. Waterhold; Metalcrete Industries.

l. Rich Film; Richmond Screw Anchor Co.

m. SikaFilm; Sika Corporation.

n. Finishing Aid; Symons Corporation.

o. Certi-Vex EnvioAssist; Vexcon Chemicals, Inc.

2. Clear, Solvent-Borne, Membrane-Forming Curing Compound:

a. AH Clear Cure; Anti-Hydro International, Inc.

b. Spartan-Cote; Burke Group, LLC (The).

c. Spray-Cure & Seal 15; ChemMasters.

d. Conspec #1-15 percent solids; Conspec Marketing & Manufacturing Co., Inc.

e. Day-Chem Cure and Seal; Dayton Superior Corporation.

f. Diamond Clear; Euclid Chemical Co.

g. Nitocure S; Fosroc.

h. Cure & Seal 309; Kaufman Products Inc.

i. Lambco 120; Lambert Corporation.

j. L&M Dress & Seal 18; L&M Construction Chemicals, Inc.

k. CS-309; W. R. Meadows, Inc.

l. Seal N Kure; Metalcrete Industries.

m. Rich Seal 14 percent UV; Richmond Screw Anchor Co.

n. Kure-N-Seal; Sonneborn, Div. of ChemRex, Inc.

o. Flortec 14; Sternson Group.

p. Cure & Seal 14 percent; Symons Corporation.

q. Clear Seal 150; Tamms Industries Co., Div. of LaPorte Construction Chemicals of North America, Inc.

r. Acrylic Cure; Unitex.

s. Certi-Vex AC 309; Vexcon Chemicals, Inc.

3. Clear, Waterborne, Membrane-Forming Curing Compound:

a. AH Clear Cure WB; Anti-Hydro International, Inc.

b. Klear Kote WB II Regular; Burke Chemicals.

c. Safe-Cure & Seal 20; ChemMasters.

d. High Seal; Conspec Marketing & Manufacturing Co., Inc.

e. Safe Cure and Seal; Dayton Superior Corporation.

f. Aqua Cure VOX; Euclid Chemical Co.

g. Cure & Seal 309 Emulsion; Kaufman Products Inc.

h. Glazecote Sealer-20; Lambert Corporation.

i. Dress & Seal WB; L&M Construction Chemicals, Inc.

j. Vocomp-20; W. R. Meadows, Inc.

k. Metcure; Metalcrete Industries.

l. Cure & Seal 150E; Nox-Crete Products Group, Kinsman Corporation.

m. Rich Seal 14 percent E; Richmond Screw Anchor Co.

n. Kure-N-Seal WB; Sonneborn, Div. of ChemRex, Inc.

o. Florseal W.B.; Sternson Group.

p. Cure & Seal 14 percent E; Symons Corporation.

q. Seal Cure WB 150; Tamms Industries Co., Div. of LaPorte Construction Chemicals of North America, Inc.

r. Hydro Seal; Unitex.

s. Starseal 309; Vexcon Chemicals, Inc.

4. Clear, Waterborne, Membrane-Forming Curing Compound, 18 to 22 Percent Solids:

a. Klear Kote WB II 20 percent; Burke Chemicals.

b. Safe-Cure & Seal 20; ChemMasters.

c. Conspec 21; Conspec Marketing & Manufacturing Co., Inc.

d. Diamond Clear VOX; Euclid Chemical Co.

e. SureCure Emulsion; Kaufman Products Inc.

f. Glazecote Sealer-20; Lambert Corporation.

g. Dress & Seal WB; L&M Construction Chemicals, Inc.

h. Vocomp-20; W. R. Meadows, Inc.

i. Metcure 0800; Metalcrete Industries.

j. Cure & Seal 200E; Nox-Crete Products Group, Kinsman Corporation.

k. Rich Seal 18 percent E; Richmond Screw Anchor Co.

l. Kure-N-Seal W; Sonneborn, Div. of ChemRex, Inc.

m. Florseal W.B.; Sternson Group.

n. Cure & Seal 18 percent E; Symons Corporation.

o. Seal Cure WB STD; Tamms Industries Co., Div. of LaPorte Construction Chemicals of North America, Inc.

p. Hydro Seal 800; Unitex.

q. Starseal 0800; Vexcon Chemicals, Inc.

2.10 RELATED MATERIALS

A. Joint-Filler Strips: ASTM D 1751, asphalt-saturated cellulosic fiber, or ASTM D 1752, cork or self- expanding cork.

B. Epoxy Joint Filler: Two-component, semirigid, 100 percent solids, epoxy resin with a Shore A hardness of 80 per ASTM D 2240.

C. Bonding Agent: ASTM C 1059, Type II, non-redispersible, acrylic emulsion or styrene butadiene.

D. Epoxy-Bonding Adhesive: ASTM C 881, two-component epoxy resin, capable of humid curing and bonding to damp surfaces, of class and grade to suit requirements, and as follows:

1. Types IV and V, load bearing, for bonding hardened or freshly mixed concrete to hardened concrete.

E. Reglets: Fabricate reglets of not less than 0.0217-inch- (0.55-mm-) thick galvanized steel sheet. Temporarily fill or cover face opening of reglet to prevent intrusion of concrete or debris.

F. Dovetail Anchor Slots: Hot-dip galvanized steel sheet, not less than 0.0336 inch (0.85 mm) thick, with bent tab anchors. Temporarily fill or cover face opening of slots to prevent intrusion of concrete or debris.

2.11 REPAIR MATERIALS

A. Repair Underlayment: Cement-based, polymer-modified, self-leveling product that can be applied in thick- nesses from 1/8 inch (3.2 mm) and that can be feathered at edges to match adjacent floor elevations.

1. Cement Binder: ASTM C 150, Portland cement or hydraulic or blended hydraulic cement as de- fined in ASTM C 219.

2. Primer: Product of underlayment manufacturer recommended for substrate, conditions, and application.

3. Aggregate: Well-graded, washed gravel, 1/8 to 1/4 inch (3 to 6 mm) or coarse sand as recommended by underlayment manufacturer.

4. Compressive Strength: Not less than 4100 psi (29 MPa) at 28 days when tested according to ASTM C 109/C 109M.

B. Repair Topping: Traffic-bearing, cement-based, polymer-modified, self-leveling product that can be ap- plied in thicknesses from 1/4 inch (6 mm).

1. Cement Binder: ASTM C 150, Portland cement or hydraulic or blended hydraulic cement as de- fined in ASTM C 219.

2. Primer: Product of topping manufacturer recommended for substrate, conditions, and application.

3. Aggregate: Well-graded, washed gravel, 1/8 to 1/4 inch (3 to 6 mm) or coarse sand as recommended by topping manufacturer.

4. Compressive Strength: Not less than 5700 psi (39 MPa) at 28 days when tested according to ASTM C 109/C 109M.

2.12 CONCRETE MIXES

A. Prepare design mixes for each type and strength of concrete determined by either laboratory trial mix or field test data bases, as follows:

1. Proportion normal-weight concrete according to ACI 211.1 and ACI 301.

2. Proportion lightweight structural concrete according to ACI 211.2 and ACI 301.

B. Footings and Foundation Walls: Proportion normal-weight concrete mix as follows:

1. Compressive Strength (28 Days): 4500 psi (20.7 MPa).

2. Maximum Slump for Concrete Containing High-Range Water-Reducing Admixture: 8 inches (200 mm) after admixture is added to concrete with 2- to 4-inch (50- to 100-mm) slump.

3. Maximum water/cement ratio shall not exceed 0.50.

C. Slab-on-Grade: Proportion normal-weight concrete mix as follows:

1. Compressive Strength (28 Days): 4500 psi (20.7 MPa).

2. Minimum Cementitious Materials Content: 520 lb/cu. yd. (309 kg/cu. m).

3. Maximum Slump: 4 inches (100 mm).

4. Maximum water/cement ratio shall not exceed 0.50.

D. Suspended Slabs: Proportion normal-weight concrete mix as follows:

1. Compressive Strength (28 Days): 4500 psi (27.6 MPa).

2. Maximum Slump: 4 inches (100 mm).

3. Maximum water/cement ratio shall no exceed 0.45.

E. Building Frame Members: Proportion normal-weight concrete mix as follows:

1. Compressive Strength (28 Days): As indicated on drawings, but not less than 4000 psi (27.6 MPa).

2. Maximum Slump: 4 inches (100 mm).

3. Maximum Slump for Concrete Containing High-Range Water-Reducing Admixture: 8 inches (200 mm) after admixture is added to concrete with 2- to 4-inch (50- to 100-mm) slump.

4. Maximum water/cement ratio shall no exceed 0.48.

F. Cementitious Materials: With a previous approval of the Structural Engineer, Limit percentage, by weight, of cementitious materials other than Portland cement in concrete as follows:

1. Fly Ash: 25 percent.

2. Combined Fly Ash and Pozzolan: 25 percent.

3. Ground Granulated Blast-Furnace Slag: 50 percent.

4. Combined Fly Ash or Pozzolan and Ground Granulated Blast-Furnace Slag: 50 percent Portland cement minimum, with fly ash or pozzolan not exceeding 25 percent.

5. Silica Fume: 10 percent.

6. Combined Fly Ash, Pozzolans, and Silica Fume: 35 percent with fly ash or pozzolans not exceeding 25 percent and silica fume not exceeding 10 percent.

7. Combined Fly Ash or Pozzolans, Ground Granulated Blast-Furnace Slag, and Silica Fume: 50 percent Portland cement minimum, with fly ash or pozzolans not exceeding 25 percent and silica fume not exceeding 10 percent.

G. Maximum Water-Cementitious Materials Ratio: Shall be as indicated on drawings and on articles

2.13,C,D,E & F of these specifications, but under any circumstances shall be more than 0.55.

H. Air Content: Add air-entraining admixture at manufacturer's prescribed rate to result in concrete at point of placement having an air content as follows within a tolerance of plus 1 or minus 1.5 percent, unless other- wise indicated:

1. Air Content: 4 percent for 1-1/2-inch- (38-mm-) nominal maximum aggregate size.

2. Air Content: 4.5 percent for 1-inch- (25-mm-) nominal maximum aggregate size.

3. Air Content: 4.5 percent for 3/4-inch- (19-mm-) nominal maximum aggregate size.

I. Do not air entrain concrete to trowel-finished interior floors and suspended slabs. Do not allow entrapped air content to exceed 3 percent.

J. Limit water-soluble, chloride-ion content in hardened concrete to 0.15 percent by weight of cement.

K. Steel-Fiber Reinforcement: When individual add to concrete mix, according to manufacturer's written instructions, at a rate of 50 lb/cu. yd. (29.7 kg/cu. m).

L. Synthetic Fiber: When individual uniformly disperse in concrete mix at manufacturer's recommended rate, but not less than 1.5 lb/cu. yd. (0.90 kg/cu. m).

M. Admixtures: Use admixtures according to manufacturer's written instructions.

1. Use water-reducing admixture or high-range water-reducing admixture (superplasticizer) in concrete, as required, for placement and workability.

2. Use water-reducing and retarding admixture when required by high temperatures, low humidity, or other adverse placement conditions.

3. Use water-reducing admixture in pumped concrete, concrete for heavy-use industrial slabs and parking structure slabs, concrete required to be watertight, and concrete with a water-cementitious materials ratio below 0.50.

4. Use corrosion-inhibiting admixture in concrete mixes where indicated.

2.13 FABRICATING REINFORCEMENT

A. Fabricate steel reinforcement according to CRSI's "Manual of Standard Practice."

2.14 CONCRETE MIXING

A. Ready-Mixed Concrete: Measure, batch, mix, and deliver concrete according to ASTM C 94 and ASTM C 1116, and furnish batch ticket information.

1. When air temperature is between 85 and 90 deg F (30 and 32 deg C), reduce mixing and delivery time from 1-1/2 hours to 75 minutes; when air temperature is above 90 deg F (32 deg C), reduce mixing and delivery time to 60 minutes.

PART 3 - EXECUTION

3.1 FORMWORK

A. Design, erect, shore, brace, and maintain formwork, according to ACI 301, to support vertical, lateral, static, and dynamic loads, and construction loads that might be applied, until concrete structure can support such loads.

B. Construct formwork so concrete members and structures are of size, shape, alignment, elevation, and position indicated, within tolerance limits of ACI 117.

C. Limit concrete surface irregularities, designated by ACI 347R as abrupt or gradual, as follows:

1. Class A, 1/8 inch (3 mm).

D. Construct forms tight enough to prevent loss of concrete mortar.

E. Fabricate forms for easy removal without hammering or prying against concrete surfaces. Provide crush or wrecking plates where stripping may damage cast concrete surfaces. Provide top forms for inclined surfaces steeper than 1.5 horizontal to 1 vertical. Kerf wood inserts for forming keyways, reglets, recess- es, and the like, for easy removal.

1. Do not use rust-stained steel form-facing material.

F. Set edge forms, bulkheads, and intermediate screed strips for slabs to achieve required elevations and slopes in finished concrete surfaces. Provide and secure units to support screed strips; use strike-off templates or compacting-type screeds.

G. Provide temporary openings for cleanouts and inspection ports where interior area of formwork is inaccessible. Close openings with panels tightly fitted to forms and securely braced to prevent loss of concrete mortar. Locate temporary openings in forms at inconspicuous locations.

H. Chamfer exterior corners and edges of permanently exposed concrete.

I. Form openings, chases, offsets, sinkages, keyways, reglets, blocking, screeds, and bulkheads required in the Work. Determine sizes and locations from trades providing such items.

J. Clean forms and adjacent surfaces to receive concrete. Remove chips, wood, sawdust, dirt, and other de- bris just before placing concrete.

K. Retighten forms and bracing before placing concrete, as required, to prevent mortar leaks and maintain proper alignment.

L. Coat contact surfaces of forms with form-release agent, according to manufacturer's written instructions, before placing reinforcement.

3.2 EMBEDDED ITEMS

A. Place and secure anchorage devices and other embedded items required for adjoining work that is attached to or supported by cast-in-place concrete. Use

Setting Drawings, templates, diagrams, instructions, and directions furnished with items to be embedded.

1. Install anchor bolts, accurately located, to elevations required.

2. Install reglets to receive top edge of foundation sheet waterproofing and to receive through-wall flashings in outer face of concrete frame at exterior walls, where flashing is shown at lintels, shelf angles, and other conditions.

3. Install dovetail anchor slots in concrete structures as indicated.

3.3 REMOVING AND REUSING FORMS

A. General: Formwork, for sides of beams, walls, columns, and similar parts of the Work, that does not sup- port weight of concrete may be removed after cumulatively curing at not less than 50 deg F (10 deg C) for 24 hours after placing concrete provided concrete is hard enough to not be damaged by form-removal operations and provided curing and protection operations are maintained.

B. Leave formwork, for beam soffits, joists, slabs, and other structural elements, that supports weight of concrete in place until concrete has achieved the following:

1. At least 70 percent of 28-day design compressive strength.

2. Determine compressive strength of in-place concrete by testing representative field- or laboratory- cured test specimens according to ACI 301.

3. Remove forms only if shores have been arranged to permit removal of forms without loosening or disturbing shores.

C. Clean and repair surfaces of forms to be reused in the Work. Split, frayed, delaminated, or otherwise damaged form-facing material will not be acceptable for exposed surfaces. Apply new form-release agent.

D. When forms are reused, clean surfaces, remove fins and laitance, and tighten to close joints. Align and secure joints to avoid offsets. Do not use patched forms for exposed concrete surfaces unless approved by Architect.

3.4 SHORES AND RESHORES

A. Comply with ACI 318 (ACI 318M), ACI 301, and recommendations in ACI 347R for design, installation, and removal of shoring and reshoring.

B. In multistory construction, extend shoring or reshoring over a sufficient number of stories to distribute loads in such a manner that no floor or member will be excessively loaded or will induce tensile stress in concrete members without sufficient steel reinforcement.

C. Plan sequence of removal of shores and reshore to avoid damage to concrete. Locate and provide adequate reshoring to support construction without excessive stress or deflection.

3.5 VAPOR RETARDERS

A. Vapor Retarder: Place, protect, and repair vapor-retarder sheets according to ASTM E 1643 and manufacturer's written instructions.

B. Fine-Graded Granular Material: Cover vapor retarder with fine-graded granular material, moisten, and compact with mechanical equipment to elevation tolerances of plus 0 inch (0 mm) or minus 3/4 inch (19 mm).

C. Granular Fill: Cover vapor retarder with granular fill, moisten, and compact with mechanical equipment to elevation tolerances of plus 0 inch (0 mm) or minus 3/4 inch (19 mm).

1. Place and compact a 1/2-inch- (13-mm-) thick layer of fine-graded granular material over granular fill.

3.6 STEEL REINFORCEMENT

A. General: Comply with CRSI's "Manual of Standard Practice" for placing reinforcement.

1. Do not cut or puncture vapor retarder. Repair damage and reseal vapor retarder before placing concrete.

B. Clean reinforcement of loose rust and mill scale, earth, ice, and other foreign materials.

C. Accurately position, support, and secure reinforcement against displacement. Locate and support reinforcement with bar supports to maintain minimum concrete cover. Do not tack weld crossing reinforcing bars.

1. Shop- or field-weld reinforcement according to AWS D1.4, where indicated.

D. Set wire ties with ends directed into concrete, not toward exposed concrete surfaces.

E. Install welded wire fabric in longest practicable lengths on bar supports spaced to minimize sagging. Lap edges and ends of adjoining sheets at least one mesh spacing. Offset laps of adjoining sheet widths to prevent continuous laps in either direction. Lace overlaps with wire.

F. Epoxy-Coated Reinforcement: Use epoxy-coated steel wire ties to fasten epoxy-coated reinforcement. Repair cut and damaged epoxy coatings with epoxy repair coating according to ASTM D 3963/D 3963M.

3.7 JOINTS

A. General: Construct joints true to line with faces perpendicular to surface plane of concrete.

B. Construction Joints: Install so strength and appearance of concrete are not

impaired, at locations indicated or as approved by Architect.

1. Place joints perpendicular to main reinforcement. Do not Continue reinforcement across construction joints, unless otherwise indicated. Do not continue reinforcement through sides of strip placements of floors and slabs.

2. Form from preformed galvanized steel, plastic keyway-section forms, or bulkhead forms with keys, unless otherwise indicated. Embed keys at least 1-1/2 inches (38 mm) into concrete.

3. When not indicated on drawings locate joints for beams, slabs, joists, and girders in the middle third of spans. Offset joints in girders a minimum distance of twice the beam width from a beam-girder intersection.

4. When not indicated on drawings locate horizontal joints in walls and columns at underside of floors, slabs, beams, and girders and at the top of footings or floor slabs.

5. Space vertical joints in walls as indicated. Locate joints beside piers integral with walls, near corners, and in concealed locations where possible.

6. Use a bonding agent at locations where fresh concrete is placed against hardened or partially hardened concrete surfaces.

C. Contraction Joints in Slabs-on-Grade: Form weakened-plane contraction joints, sectioning concrete into areas as indicated. Construct contraction joints for a depth equal to at least one-third of concrete thick- ness, as follows:

1. Grooved Joints: Form contraction joints after initial floating by grooving and finishing each edge of joint to a radius of 1/8 inch (3 mm). Repeat grooving of contraction joints after applying surface finishes. Eliminate groover tool marks on concrete surfaces.

2. Sawed Joints: Form contraction joints with power saws equipped with shatterproof abrasive or diamond-rimmed blades. Cut 1/8-inch- (3-mm-) wide joints into concrete when cutting action will not tear, abrade, or otherwise damage surface and before concrete develops random contraction cracks.

D. Isolation Joints in Slabs-on-Grade: After removing formwork, install joint-filler strips at slab junctions with vertical surfaces, such as column pedestals, foundation walls, grade beams, and other locations, as indicated.

1. Extend joint-filler strips full width and depth of joint, terminating flush with finished concrete surface, unless otherwise indicated.

2. Terminate full-width joint-filler strips not less than 1/2 inch (12 mm) or more than 1 inch (25 mm) below finished concrete surface where joint sealants, specified in Division 7 Section "Joint Seal- ants," are indicated.

3. Install joint-filler strips in lengths as long as practicable. Where more than one length is required, lace or clip sections together.

E. Dowel Joints: Install dowel sleeves and dowels or dowel bar and support assemblies at joints where indicated.

1. Use dowel sleeves or lubricate or asphalt-coat one-half of dowel length to prevent concrete bonding to one side of joint.

3.8 WATERSTOPS

A. Flexible Waterstops: Install in construction joints as indicated to form a continuous diaphragm. Install in longest lengths practicable. Support and protect exposed waterstops during progress of Work. Field- fabricate joints in waterstops according to manufacturer's written instructions.

B. Self-Expanding Strip Waterstops: Install in construction joints and at other locations indicated, according to manufacturer's written instructions, bonding or mechanically fastening and firmly pressing into place. Install in longest lengths practicable.

3.9 CONCRETE PLACEMENT

A. Before placing concrete, verify that installation of formwork, reinforcement, and embedded items is complete and that required inspections have been performed.

B. Do not add water to concrete during delivery, at Project site, or during placement, unless approved by Architect.

1. Do not add water to concrete after adding high-range water-reducing admixtures to mix.

C. Deposit concrete continuously or in layers of such thickness that no new concrete will be placed on concrete that has hardened enough to cause seams or planes of weakness. If a section cannot be placed continuously, provide construction joints as specified. Deposit concrete to avoid segregation.

D. Deposit concrete in forms in horizontal layers no deeper than 24 inches (600 mm) and in a manner to avoid inclined construction joints. Place each layer while preceding layer is still plastic, to avoid cold joints.

1. Consolidate placed concrete with mechanical vibrating equipment. Use equipment and procedures for consolidating concrete recommended by ACI 309R.

2. Do not use vibrators to transport concrete inside forms. Insert and withdraw vibrators vertically at uniformly spaced locations no farther than the visible effectiveness of the vibrator. Place vibrators to rapidly penetrate placed layer and at least 6 inches (150 mm) into preceding layer. Do not insert vibrators into lower layers of concrete that have begun to lose plasticity. At each insertion, limit du- ration of vibration to time necessary to consolidate concrete and complete embedment of reinforcement and other embedded items without causing mix constituents to segregate.

E. Deposit and consolidate concrete for floors and slabs in a continuous operation,

within limits of construction joints, until placement of a panel or section is complete.

1. Consolidate concrete during placement operations so concrete is thoroughly worked around reinforcement and other embedded items and into corners.

2. Maintain reinforcement in position on chairs during concrete placement.

3. Screed slab surfaces with a straightedge and strike off to correct elevations.

4. Slope surfaces uniformly to drains where required.

5. Begin initial floating using bull floats or darbies to form a uniform and open-textured surface plane, free of humps or hollows, before excess moisture or bleedwater appears on the surface. Do not further disturb slab surfaces before starting finishing operations.

F. Hot-Weather Placement: Place concrete according to recommendations in ACI 305R and as follows, when hot-weather conditions exist:

1. Cool ingredients before mixing to maintain concrete temperature below 90 deg F (32 deg C) at time of placement. Chilled mixing water or chopped ice may be used to control temperature, provided water equivalent of ice is calculated to total amount of mixing water. Using liquid nitrogen to cool concrete is Contractor's option.

2. Cover steel reinforcement with water-soaked burlap so steel temperature will not exceed ambient air temperature immediately before embedding in concrete.

3. Fog-spray forms, steel reinforcement, and subgrade just before placing concrete. Keep subgrade moisture uniform without standing water, soft spots, or dry areas.

3.10 FINISHING FORMED SURFACES

A. Rough-Formed Finish: As-cast concrete texture imparted by form-facing material with tie holes and defective areas repaired and patched. Remove fins and other projections exceeding ACI 347R limits for class of surface specified.

B. Smooth-Formed Finish: As-cast concrete texture imparted by form-facing material, arranged in an orderly and symmetrical manner with a minimum of seams. Repair and patch tie holes and defective areas. Re- move fins and other projections exceeding 1/8 inch (3 mm) in height.

1. Apply to concrete surfaces exposed to public view or to be covered with a coating or covering material applied directly to concrete, such as waterproofing, dampproofing, veneer plaster, or painting.

2. Do not apply rubbed finish to smooth-formed finish.

C. Related Unformed Surfaces: At tops of walls, horizontal offsets, and similar

unformed surfaces adjacent to formed surfaces, strike off smooth and finish with a texture matching adjacent formed surfaces. Continue final surface treatment of formed surfaces uniformly across adjacent unformed surfaces, unless otherwise indicated.

3.11 FINISHING FLOORS AND SLABS

A. General: Comply with recommendations in ACI 302.1R for screeding, restraightening, and finishing operations for concrete surfaces. Do not wet concrete surfaces.

B. Scratch Finish: While still plastic, texture concrete surface that has been screeded and bull-floated or darbied. Use stiff brushes, brooms, or rakes.

1. Apply scratch finish to surfaces indicated and to surfaces to receive concrete floor topping or mor- tar setting beds for ceramic or quarry tile, Portland cement terrazzo, and other bonded cementitious floor finishes.

C. Float Finish: Consolidate surface with power-driven floats or by hand floating if area is small or inaccessible to power driven floats. Restraighten, cut down high spots, and fill low spots. Repeat float passes and restraightening until surface is left with a uniform, smooth, granular texture.

1. Apply float finish to surfaces indicated, to surfaces to receive trowel finish, and to floor and slab sur- faces to be covered with fluid-applied or sheet waterproofing, built-up or membrane roofing, or sand-bed terrazzo.

D. Trowel Finish: After applying float finish, apply first trowel finish and consolidate concrete by hand or pow- er-driven trowel. Continue troweling passes and restraighten until surface is free of trowel marks and uniform in texture and appearance. Grind smooth any surface defects that would telegraph through applied coatings or floor coverings.

1. Apply a trowel finish to surfaces indicated and to floor and slab surfaces exposed to view or to be covered with resilient flooring, carpet, ceramic or quarry tile set over a cleavage membrane, paint, or another thin film-finish coating system.

2. Finish surfaces to the following tolerances, measured within 24 hours according to ASTM E 1155/E 1155M for a randomly trafficked floor surface:

E. Trowel and Fine-Broom Finish: Apply a partial trowel finish, stopping after second troweling, to surfaces indicated and to surfaces where ceramic or quarry tile is to be installed by either thickset or thin-set meth- od. Immediately after second troweling, and when concrete is still plastic, slightly scarify surface with a fi- ne broom.

F. Broom Finish: Apply a broom finish to exterior concrete platforms, steps, and ramps, and elsewhere as indicated.

1. Immediately after float finishing, slightly roughen trafficked surface by brooming with fiber-bristle broom perpendicular to main traffic route.

Coordinate required final finish with Architect before ap- plication.

G. Slip-Resistive Aggregate Finish: Before final floating, apply slip-resistive aggregate finish where indicated and to concrete stair treads, platforms, and ramps. Apply according to manufacturer's written instructions and as follows:

1. Uniformly spread 25 lb/100 sq. ft. (12 kg/10 sq. m) of dampened slip-resistive aggregate over sur- face in one or two applications. Tamp aggregate flush with surface, but do not force below surface.

2. After broadcasting and tamping, apply float finish.

3. After curing, lightly work surface with a steel wire brush or an abrasive stone, and water to expose slip-resistive aggregate.

H. Mineral Dry-Shake Floor Hardener Finish: After initial floating, apply mineral dry-shake materials to sur- faces according to manufacturer's written instructions and as follows:

1. Uniformly apply mineral dry-shake materials at a rate of 100 lb/100 sq. ft. (49 kg/10 sq. m), unless greater amount is recommended by manufacturer.

2. Uniformly distribute approximately two-thirds of mineral dry-shake materials over surface by hand or with mechanical spreader, and embed by power floating. Follow power floating with a second mineral dry-shake application, uniformly distributing remainder of material, and embed by power floating.

3. After final floating, apply a trowel finish. Cure concrete with curing compound recommended by dry-shake material manufacturer and apply immediately after final finishing.

3.12 MISCELLANEOUS CONCRETE ITEMS

A. Filling In: Fill in holes and openings left in concrete structures, unless otherwise indicated, after work of other trades is in place. Mix, place, and cure concrete, as specified, to blend with in-place construction. Provide other miscellaneous concrete filling indicated or required to complete Work.

B. Curbs: Provide monolithic finish to interior curbs by stripping forms while concrete is still green and by steel-troweling surfaces to a hard, dense finish with corners, intersections, and terminations slightly round- ed.

C. Equipment Bases and Foundations: Provide machine and equipment bases and foundations as shown on Drawings. Set anchor bolts for machines and equipment at correct elevations, complying with diagrams or templates of manufacturer furnishing machines and equipment.

D. Steel Pan Stairs: Provide concrete fill for steel pan stair treads, landings, and associated items. Cast-in inserts and accessories as shown on Drawings. Screed, tamp, and trowel-finish concrete surfaces.

3.13 CONCRETE PROTECTION AND CURING

A. General: Protect freshly placed concrete from premature drying and excessive cold or hot temperatures. Comply with ACI 306.1 for cold-weather protection and with recommendations in ACI 305R for hot-weather protection during curing.

B. Evaporation Retarder: Apply evaporation retarder to unformed concrete surfaces if hot, dry, or windy conditions cause moisture loss approaching 0.2 lb/sq. ft. x h (1 kg/sq. m x h) before and during finishing operations. Apply according to manufacturer's written instructions after placing, screeding, and bull floating or darbying concrete, but before float finishing.

C. Formed Surfaces: Cure formed concrete surfaces, including underside of beams, supported slabs, and other similar surfaces. If forms remain during curing period, moist cure after loosening forms. If removing forms before end of curing period, continue curing by one or a combination of the following methods:

D. Unformed Surfaces: Begin curing immediately after finishing concrete. Cure unformed surfaces, including floors and slabs, concrete floor toppings, and other surfaces, by one or a combination of the following methods:

1. Moisture Curing: Keep surfaces continuously moist for not less than seven days with the following materials:

    a. Water.

    b. Continuous water-fog spray.

    c. Absorptive cover, water saturated, and kept continuously wet. Cover concrete surfaces and edges with 12-inch (300-mm) lap over adjacent absorptive covers.

2. Moisture-Retaining-Cover Curing: Cover concrete surfaces with moisture-retaining cover for curing concrete, placed in widest practicable width, with sides and ends lapped at least 12 inches (300 mm), and sealed by waterproof tape or adhesive. Cure for not less than seven days. Immediately repair any holes or tears during curing period using cover material and waterproof tape.

    a. Moisture cure or use moisture-retaining covers to cure concrete surfaces to receive floor coverings.

    b. Moisture cure or use moisture-retaining covers to cure concrete surfaces to receive penetrating liquid floor treatments.

    c. Cure concrete surfaces to receive floor coverings with either a moisture-retaining cover or a curing compound that the manufacturer recommends for use with floor coverings.

3. Curing Compound: Apply uniformly in continuous operation by power spray or roller according to manufacturer's written instructions. Recoat areas subjected to heavy rainfall within three hours after initial application. Maintain continuity

of coating and repair damage during curing period.

3.14 LIQUID FLOOR TREATMENTS

A. Penetrating Liquid Floor Treatment: Prepare, apply, and finish penetrating liquid floor treatment according to manufacturer's written instructions.

1. Remove curing compounds, sealers, oil, dirt, laitance, and other contaminants and complete sur- face repairs.

2. Do not apply to concrete that is less than seven days old.

3. Apply liquid until surface is saturated, scrubbing into surface until a gel forms; rewet; and repeat brooming or scrubbing. Rinse with water; remove excess material until surface is dry. Apply a second coat in a similar manner if surface is rough or porous.

B. Sealing Coat: Uniformly apply a continuous sealing coat of curing and sealing compound to hardened concrete by power spray or roller according to manufacturer's written instructions.

3.15 JOINT FILLING

A. Prepare, clean, and install joint filler according to manufacturer's written instructions.

1. Defer joint filling until concrete has aged at least six months. Do not fill joints until construction traffic has permanently ceased.

B. Remove dirt, debris, saw cuttings, curing compounds, and sealers from joints; leave contact faces of joint clean and dry.

C. Install semirigid epoxy joint filler full depth in saw-cut joints and at least 2 inches (50 mm) deep in formed joints. Overfill joint and trim joint filler flush with top of joint after hardening.

3.16 CONCRETE SURFACE REPAIRS

A. Defective Concrete: Repair and patch defective areas when approved by Architect. Remove and replace concrete that cannot be repaired and patched to Architect's approval.

B. Patching Mortar: Mix dry-pack patching mortar, consisting of one-part Portland cement to two and one-half parts fine aggregate passing a No. 16 (1.2-mm) sieve, using only enough water for handling and placing.

C. Repairing Formed Surfaces: Surface defects include color and texture irregularities, cracks, spalls, air bubbles, honeycombs, rock pockets, fins and other projections on the surface, and stains and other dis- colorations that cannot be removed by cleaning.

1. Immediately after form removal, cut out honeycombs, rock pockets, and voids more than 1/2 inch (13 mm) in any dimension in solid concrete but not less

than 1 inch (25 mm) in depth. Make edges of cuts perpendicular to concrete surface. Clean, dampen with water, and brush-coat holes and voids with bonding agent. Fill and compact with patching mortar before bonding agent has dried. Fill form-tie voids with patching mortar or cone plugs secured in place with bonding agent.

2. Repair defects on surfaces exposed to view by blending white Portland cement and standard port- land cement so that, when dry, patching mortar will match surrounding color. Patch a test area at inconspicuous locations to verify mixture and color match before proceeding with patching. Com- pact mortar in place and strike off slightly higher than surrounding surface.

3. Repair defects on concealed formed surfaces that affect concrete's durability and structural performance as determined by Architect.

D. Repairing Unformed Surfaces: Test unformed surfaces, such as floors and slabs, for finish and verify sur- face tolerances specified for each surface. Correct low and high areas. Test surfaces sloped to drain for trueness of slope and smoothness; use a sloped template.

1. Repair finished surfaces containing defects. Surface defects include spalls, popouts, honeycombs, rock pockets, crazing and cracks in excess of 0.01 inch (0.25 mm) wide or that penetrate to reinforcement or completely through unreinforced sections regardless of width, and other objectionable conditions.

2. After concrete has cured at least 14 days, correct high areas by grinding.

3. Correct localized low areas during or immediately after completing surface finishing operations by cutting out low areas and replacing with patching mortar. Finish repaired areas to blend into adjacent concrete.

4. Correct other low areas scheduled to receive floor coverings with a repair underlayment. Prepare, mix, and apply repair underlayment and primer according to manufacturer's written instructions to produce a smooth, uniform, plane, and level surface. Feather edges to match adjacent floor elevations.

5. Correct other low areas scheduled to remain exposed with a repair topping. Cut out low areas to ensure a minimum repair topping depth of 1/4 inch (6 mm) to match adjacent floor elevations. Pre- pare, mix, and apply repair topping and primer according to manufacturer's written instructions to produce a smooth, uniform, plane, and level surface.

6. Repair defective areas, except random cracks and single holes 1 inch (25 mm) or less in diameter, by cutting out and replacing with fresh concrete. Remove defective areas with clean, square cuts and expose steel reinforcement with at least 3/4 inch (19 mm) clearance all around. Dampen concrete surfaces in contact with patching concrete and apply bonding agent. Mix patching concrete of same materials and mix as original concrete except without coarse aggregate. Place, compact, and finish to blend with adjacent finished concrete. Cure in same manner as adjacent concrete.

7. Repair random cracks and single holes 1 inch (25 mm) or less in diameter with patching mortar. Groove top of cracks and cut out holes to sound concrete and clean off dust, dirt, and loose particles. Dampen cleaned concrete surfaces and apply bonding agent. Place patching mortar before bonding agent has dried. Compact patching mortar and finish to match adjacent concrete. Keep patched area continuously moist for at least 72 hours.

E. Perform structural repairs of concrete, subject to Architect's approval, using epoxy adhesive and patching mortar.

F. Repair materials and installation not specified above may be used, subject to Architect's approval.

3.17 FIELD QUALITY CONTROL

A. Testing Agency: Owner will engage a qualified independent testing and inspecting agency to sample materials, perform tests, and submit test reports during concrete placement. Sampling and testing for quality control may include those specified in this Article.

B. Testing Services: Testing of composite samples of fresh concrete obtained according to ASTM C 172 shall be performed according to the following requirements:

1. Testing Frequency: Obtain one composite sample for each day's pour of each concrete mix exceeding 5 cu. yd. (4 cu. m), but less than 25 cu. yd. (19 cu. m), plus one set for each additional 50 cu. yd. (38 cu. m) or fraction thereof.

    a. When frequency of testing will provide fewer than five compressive-strength tests for each concrete mix, testing shall be conducted from at least five randomly selected batches or from each batch if fewer than five are used.

2. Slump: ASTM C 143; one test at point of placement for each composite sample, but not less than one test for each day's pour of each concrete mix. Perform additional tests when concrete consistency appears to change.

3. Air Content: ASTM C 231, pressure method, for normal-weight concrete; ASTM C 173, volumetric method, for structural lightweight concrete; one test for each composite sample, but not less than one test for each day's pour of each concrete mix.

4. Concrete Temperature: ASTM C 1064; one test hourly when air temperature is 40 deg F (4.4 deg C) and below and when 80 deg F (27 deg C) and above, and one test for each composite sample.

5. Compression Test Specimens: ASTM C 31/C 31M; cast and laboratory cure one set of six standard cylinder specimens for each composite sample.

    a. Cast and field cure one set of six standard cylinder specimens for each composite sample.

6. Compressive-Strength Tests: ASTM C 39; test three laboratory-cured specimens at 7 days and three at 28 days for normal reinforced concrete and three field-cured at 1 day for postensioned concrete slabs and other structural elements.

    a. A compressive-strength test shall be the average compressive strength from three specimens obtained from same composite sample and tested at age indicated.

C. When strength of field-cured cylinders is less than 85 percent of companion laboratory-cured cylinders, Contractor shall evaluate operations and provide corrective procedures for protecting and curing in-place concrete.

D. Strength of each concrete mix will be satisfactory if every average of any three consecutive compressive- strength tests equals or exceeds specified compressive strength and no compressive-strength test value falls below specified compressive strength by more than 500 psi (3.4 MPa).

E. Test results shall be reported in writing to Architect, concrete manufacturer, and Contractor within 48 hours of testing. Reports of compressive-strength tests shall contain Project identification name and number, date of concrete placement, name of concrete testing and inspecting agency, location of concrete batch in Work, design compressive strength at 28 days, concrete mix proportions and materials, compressive breaking strength, and type of break for both 7-and 28-day tests.

F. Nondestructive Testing: Impact hammer, sonoscope, or other nondestructive device may be permitted by Architect but will not be used as sole basis for approval or rejection of concrete.

G. Additional Tests: Testing and inspecting agency shall make additional tests of concrete when test results indicate that slump, air entrainment, compressive strengths, or other requirements have not been met, as directed by Architect. Testing and inspecting agency may conduct tests to determine adequacy of concrete by cored cylinders complying with ASTM C 42 or by other methods as directed by Architect.

END OF SECTION 03300

SECTION 07 52 19
MODIFIED BITUMEN SHEET ROOFING

PART I - GENERAL

1 .01 SUMMARY

A. Insulation
B. Base Sheet.
C. Base Sheet Fasteners/Plates.
D. Modified Bitumen Interply Membrane.
E. Modified Bitumen Sheet Roofing.
F. Modified Bitumen Flashings.
G. Roof Accessories.
H. Walkways.
I. Surfacing.

I .02 RELATED SECTIONS

A. Division 6 Section Carpentry: Wood Nailers.
B. Division 7 Section Flashing and Sheet Metal: Metal counter Flashings, etc.
C. Division 7 Section Roof Specialties: Roof Hatches, Prefabricated Curbs.
D. Division 7 Section Sealants Caulks, Sealants.
E. Division 15 Section Drainage and Vent Systems: Roof Drains.

I .03 REFERENCES

A. ASTM-American Society for Testing and Material.
B. AWPB-American Wood Preservers' Bureau. C. ASTM D41 -Asphalt Primer Used in Roofing. D. NRCA-National Roofing Contractors Association. E. ASTM D3601 1 or II-Asphalt Glass Felt Used in Roofing. F. ASTM D312-Asphalt used in Roofing.
C. UL-Underwriters Laboratories, Fire Classification.
D. RIC/TIMA — The Roof Insulation Committee of the Thermal Insulation Manufacturers Association.
E. SMACNA-Sheet Metal and Air Conditioning Contractors National Association.
F. FS HH-1 529b-Insulation Board, Thermal, Mineral Aggregate.
G. ASTM DI 227-Asphalt Emulsion as a Roof Coating.
H. ASTM DI 863-Mineral Aggregate.
I. ASTM D2824-Aluminum Pigmented Asphalt Roof Coating.
J. EPA, Energy Star Program.

I .04 REGULATORY REQUIREMENTS

A. Additional Test Agencies & Building Code Requirements: As Applicable.

I .05 SUBMITTALS

A. Submit product data for: All components to be used, i.e: Primer, Membranes, Coatings, et al.

B. Only substitutions equal or better approved in writing by Owner prior to scheduled installation will be considered.

I .06 QUALITY ASSURANCE

A. Manufacturer.

1. Shall provide local Technical Sales Representative to make start-up inspection and in-progress site inspections at regular intervals.
2. Shall provide final inspection of completed roofing system and issuance of the warranty.

B. Contractor.

1. Roofing contractor shall be a registered applicator by the Manufacturer.
2. Contractor shall retain a workmanship warranty for the specified system within the manufacturer's warranty.
3. Strict adherence to the manufacturer's most current published specifications are to be followed. Deviations must be approved in writing by the architect and manufacturer prior to installation.

C. Designation of Responsible Personnel.

D. Walkover Inspection.

1. Attendance: Representative of Owner/Architect, General Contractor, Roofing Contractor and Manufacturer's Technical Representative.

E. Final Inspection.

1. Attendance: Representative of Owner/Architect, General Contractor, Roofing Contractor and Membrane Manufacturer's Technical Representative.

2. Minimum agenda:

a. Walkover inspection.
b. Identification of problems which may impede issuance of warranty.
c. Creation of punch list.

I .07 DELIVERY STORAGE AND HANDLING

A. Delivery of Materials.

1. Deliver and store materials under provisions of Specifications.
2. Deliver materials to job-site in new, dry, unopened and well marked containers showing product and manufacturer's name, production date and/or product code. All materials delivered shall be on pallets.
3. Deliver materials in sufficient quantity to allow continuity of work.

B. Storage of Materials.

1. Storage of plies to be protected from water or extreme humidity.

2. Store all roll roof materials on end to prevent their becoming deformed/damaged. Discard rolls which have flattened, creased or otherwise damaged.

3. Place materials on pallets which are at least four (4) inches above the ground. Do not stack pallets.
4. Rooftop Storage: Disperse materials to avoid concentrated loading.
5. Cover top and sides of all exterior stored materials with canvas tarpaulin (not polyethylene). Secure tarpaulin.

C. Material Handling.

1. Handle plies to avoid bending, tearing or other damage during transportation and installation.
2. Material handling equipment shall be selected and operated so as not to damage existing construction or applied roofing. Do not operate or situate material handling equipment in location(s) that will hinder smooth flow of vehicular or pedestrian traffic.

D. Safety Requirements.

1. All application, material handling and associated equipment shall conform to and be in conformance with OSHA safety requirements.
2. Comply with Federal, State, Local and Owner fire safety requirements.
3. Maintain fire extinguishers within easy access whenever power tools, kettles or torches are being used.

I .08 ENVIRONMENTAL REQUIREMENTS

A. Do not apply roofing membrane during inclement weather.
B. Do not apply roofing membrane to damp or frozen substrates.
C. Do not expose materials vulnerable to water or sun damage in quantities greater than can be weatherproofed during the same day.

I .09 WARRANTY

A. Manufacturer shall provide:
1. 12 years.
2. Workmanship and Materials.
3. Total System Warranty.

PART 2 – PRODUCTS

2.01 MANUFACTURERS

A. Basis of design is Two ply Styrene Butadiene Styrene (SBS) Modified Bituminous Composite Reinforcement Roofing System with new rigid insulation over metal deck and over concrete deck by local manufacturer.
B. Approved equal substitutions are allowed.

2.02 SHEET MATERIALS

A. Base Sheet- One Ply of glass fiber reinforcement SBS Membrane. Shall meet or exceed the requirements of ASTM 6163-00 Type I Grade S.
    1. Thickness min in mils (mm) = (2.0)
    2. Net ,mass/unit area, min lbs/100ft2 (g/m2) = 45 (2197)
    3. Max. load at 0 +/- 3.6 grad Fahrenheit (-18 +/-2 grad Celsius) = 70 (12.3)
    4. Elongation at 0 +/- 3.6 grad Fahrenheit (-18 +/-2 grad Celsius) = 1
    5. Elongation at 73.4 +/- 3.6 grad Fahrenheit (23 +/-2 grad Celsius) MD and XMD, min. at max load before and after heat conditioning (%) = 2
    6. Tear strength at 73.4 +/- 3.6 grad Fahrenheit (23 +/-2 grad Celsius) Min.,lbf(N)=35 (156)
    7. Roll Min weight per 100 SF = 45 lbs (20.5 kg)

B. Modified Bitumen Membrane: SBS Modified Bitumen top membrane with a polyester mat reinforcement, finished with ceramic granule as top protection surface area and burn-off film or silica sand on the other side. ASTM-D-6164-00 Type I Grade G and UBC Standard 15-6-E.

    1. Thickness min in mils (mm) = (3.3)
    2. Net ,mass/unit area, min lbs/100ft2 (g/m2) = 75 (3661)
    3. Max. load at 0 +/- 3.6 grad Fahrenheit (-18 +/-2 grad Celsius) = 70 (12.3)
    4. Elongation at 0 +/- 3.6 grad Fahrenheit (-18 +/-2 grad Celsius) = 20
    5. Elongation at 73.4 +/- 3.6 grad Fahrenheit (23 +/-2 grad Celsius) MD and XMD, min. at max load before and after heat conditioning (%) = 35
    6. Tear strength at 73.4 +/- 3.6 grad Fahrenheit (23 +/-2 grad Celsius) Min.,lbf(N)=55 (246)
    7. Roll Min weight per 100 SF = 75 lbs (20.5 kg)

C. Cold Adhesive- SBS Adhesive Solvent based cold process asphaltic adhesive, asbestos free, specially formulated to bond SBS membranes to insulation and other membranes in compliance to ASTM 3019 Type III and ASTM D3409. Application requires min. 1.5 gallons per square in smooth surface as required in codes. Approximate weight: 10 pounds per Gallons or 50lb per pail.

D. Insulation- Polyisocyanurate Insulation rigid board insulation consisting of a glass-fiber-reinforced polyisocyanurate foam core laminated between 1 mil smooth, reflective aluminum foil facers.

E. Flashing, cant strips, insulation anchorage and accessories acceptable to the Roofing Systems Manufacturer.

F. Termination bars- when specified on drawings, provide a compatible termination bar to secure flashing and membrane acceptable to the roofing systems manufacturers.

2.04 RELATED MATERIALS

A. Sealant: One part urethane.
B. Cants: Perlite, ASTM C728, 4" face.
C. Corrosion Resistant Fasteners.
D. Prefabricated Roof Hatches.

E. Traffic Surfacing: Walking pads: ASTM B-29, 41b. per square foot.
G. Roof Penetrations protection: One-part precast curb components, 1-Part polyether pourable sealant, and structural adhesive/sealant designed for compatible roofing.
H. Grease Containment: Guard system installed around the curb of exhaust fans to catch any output of greases, oils, fats, or other chemicals. System to be compatible with roofing system.

PART 3 – EXECUTION

3.01 EXAMINATION AND PROTECTION

A. Inspection.

1. Verify installation conditions as satisfactory to receive work.
2. Do not install new roofing until all unsatisfactory conditions are corrected. Beginning work constitutes acceptance of conditions.
3. Check projections, curbs and deck for inadequate anchorage, foreign material, moisture, or unevenness that would prevent quality of execution of the new roofing system.

A. General Workmanship.

1. Substrate: Free of foreign particles prior to laying roof membrane.
2. Phased application: Not permitted, all plies shall be completed each day.
3. Confine equipment, storage of materials, debris and the operations and movement of workers within the limits agreed upon for the project.
4. Where wheeled or other traffic over partially completed roofing is unavoidable, provide adequate exterior protection to the roof.
5. Wrapper and package materials: Not to be included in roof system.
6. All metal and masonry shall be asphalt primed before fully adhering flashing sheets.
7. Mechanical Fasteners: Seated firmly with fastener heads flush or below surface.
8. Base flashing height is not less than eight (8) inches above finished surface.

B. Protection.

1. Contractor shall be responsible for protection of property during course of work. Lawn, shrubbery, paved areas and building shall be protected from damage at no extra cost.
2. Roofing and flashing shall be installed and sealed in a watertight manner on same day of installation or upon the arrival of inclement weather.
3. At the end of each work day, partial installation shall be sealed with water stops along edges to prevent water entry.
4. At the start of each work day, drains within daily work area shall be plugged. Plugs are to be removed at end of each work day or before arrival of inclement weather.
5. Preparation work shall be limited to those areas that can be covered with installed roofing material on same day or before arrival of inclement weather.

6. Arrange work sequence to avoid use of newly constructed roofing for storage, walking surface and equipment movement. Move equipment and ground storage areas as work progresses.

C. Surface Preparation.

1. Remove all existing roof membrane, flashings and rigid insulation.
2. Verify structural integrity of the deck. Notify the Architect of any deck or curb deficiency.
3. Remove deteriorated or damaged wood blocking and install new treated wood blocking to match existing.

3.02 APPLICATION OF INSULATION AND ROOFING:

1. On concrete structures- cold adhere insulation board to concrete deck using a one-component, moisture-cured polyurethane adhesive gun applied from pre-pressurized container.
2. On metal deck structures- mechanically fasten the insulation board over metal deck. Refer to fastener layout in drawings and/or standard specifications.
3. Apply insulation, cold adhesive, or membranes over clean dry roof deck in strict conformance with the manufacturer's specification
4. Cant strips shall be provided at all intersections of roof surfaces with vertical walls, parapets and curbs. Roofing layers shall be turned up against cant strip and trimmed parallel with upper edge of cant strip.
5. Roofing shall fit neatly around all pipes, vents, drains, smoke vents and curbs and be sealed with plastic roof cement Metal flanges of smoke vents, pipes, fans, etc., shall be embedded in cold adhesive between layers of roofing. Edges shall be sealed in roofing with 6" wide cold adhesive saturated web fabric, mopped.
6. At all open edges, treated wood blocking, equal in thickness to the insulation, shall be firmly fastened to the roof decking as indicated on the drawings. Around all roof openings, vents, stacks, drains, etc., treated wood blocking nailer strips shall be installed and securely fastened to the metal deck.
7. Flashings: Aluminum metal as specified in the drawings attached,
8. All materials shall be applied over a clean, dry insulation board as specified by the manufacturer.

3.03 SITE CONDITIONS

1. The Contractor shall at all times keep materials and equipment in orderly, safe arrangement, minimize conflicts with other trades, protect surrounding existing building and equipment.
2. At the completion of the work, or whenever directed, the contractor shall remove all rubbish and unused materials accumulated in connection with the Work, and leave the roofs in a clean and acceptable condition.
3. Strictly comply with all safety regulations.

3.04 APPROVALS

1. All roofing materials method of application and method of fastening shall conform to UCB requirements for Class I-120 uplift and UCB Class A Roof. Evidence of compliance is required for submittals approval.
2. All materials shall be delivered in packages bearing the manufacturers label or identifying mark. Each package of asphalt shingles, mineral surfaced roll roofing, life retardant-

treated wood shingles and shales, modified bitumen, thermoplastic and thermoset membranes, and build-up roofing ply materials shall bear the label of an approved agency having a service for the inspection of material and finished products during manufacture.

3.05 WARRANTY:

1. Roofing and flashing shall be guaranteed to remain water tight and in good conditions for a period of twelve (12) years from the date of acceptance of the work by the owner. The Contractor shall provide bonded roof guarantee through a surety Company for the total cost of the roofing work, or other guarantee acceptable to the Owner to make any repair and replacement needed on the roof without any additional cost to the Owner, for any part of the roof that fails to meet the guarantee during that period.

2. In lieu of the written bonded roof guarantee through a surety Company referred to above, the Contractor may file with the Owner a 12 years guarantee of a responsible manufacturer of the material used or to be used in the roofing work; provide, however, that in consideration thereof, the Contractor hereby authorizes the Owner (1) to proceed with and make any repairs for the account and at the expenses of the Contractor in the event the later or any subcontractor thereof fails to undertakes such work within 7 days after being requested in writing to do so as an obligation included in the guarantee of the Contractor, any amounts expended by the owner pursuant to (1) above, as weIl as the amount of any claim, action or demand of the Owner against the Contractor, predicated upon or arising from such roofing work so guaranteed by the Contractor.

END OF SECTION 07 52 19

SECTION 09 24 00
PORTLAND CEMENT PLASTERING

PART 1 - GENERAL

1.1 DESCRIPTION

A. This section specifies lathing and portland cement based plaster.

1.2 TERMINOLOGY

A. Definitions and description of terms to be in accordance with ASTM C11, ASTM C926, ASTM C1063 and as specified.
B. Underside of Structure Overhead: In spaces where steel trusses or bar joists are shown, the underside of structure overhead is defined as the underside of the floor or roof construction supported by beams, trusses, and bar joists.
C. Self-furring Lath: Metal plastering bases having dimples or crimps designed to hold the back plane of the lath 6 to 10 mm (1/4 to 3/8 inch) away from the plane of the solid backing.
D. Solid Backing or Solid Bases: Concrete, masonry, sheathing, rigid insulation, and similar materials to which plaster is directly applied.
E. Wet Areas: Areas of a building where cyclic or continuous exposure to very humid or wet conditions, or in which a dew point condition may occur in the plaster.

1.3 SUBMITTALS

A. Submit in accordance with Section 01 340-0118 Shop Drawings, Product Data & Samples.
B. Manufacturer's Literature and Data:
    1. Accessories for plaster, each type.
    2. Metal plastering bases, each type.
    3. Fasteners.
    4. Bonding compounds, including application instructions.
    5. Admixtures, including mixing and application instructions.
C. Samples:
    1. Accessories for plaster, each type, not less than 152 mm (6 inches) long.

1.4 DELIVERY, STORAGE AND PROTECTION

A. Deliver manufactured materials in the manufacturers' original unbroken packages or containers which are labeled plainly with the manufacturers' names and brands. Keep cementitious materials dry and stored off the ground, under cover, and away from sweating walls and other damp surfaces until ready for use.

1.5 QUALITY ASSURANCE

A. Installers Qualifications: Work is to be performed by installer having a minimum of three (3) years' experience for work relating to this Section.

1.6 PERFORMANCE REQUIREMENTS

A. Where indicated on construction documents, provide cement plaster assemblies identical to those of assemblies tested for fire resistance according to ASTM E119 by a qualified testing agency.
B. Where indicated on construction documents provide cement plaster assemblies identical to those of assemblies tested for STC ratings according to ASTM E90 and classified according to ASTM E413 by a qualified testing agency.

1.7 APPLICABLE PUBLICATIONS

A. The publications listed below form a part of this specification to the extent referenced. The publications are referenced in the text by basic designation only.
B. ASTM International (ASTM):

A653/A653M-20 ..... Steel Sheet, Zinc-Coated (Galvanized) or Zinc-Iron Alloy-Coated (Galvannealed) by the Hot-Dip Process

A1064/A1064M-18a..... Carbon-Steel Wire and Welded Wire Reinforcement, Plain and Deformed, for Concrete

C11-18b ..... Terminology Relating to Gypsum and Related Building Materials and Systems.

C91/C91M-18..... Masonry Cement

C150/C150M-20..... Portland Cement

C206-14 ..... Finishing Hydrated Lime

C207-18 ..... Hydrated Lime for Masonry Purposes

C260/C260M-10a(2016)..... Air Entraining Admixtures for Concrete.

C847-18 ..... Metal Lath

C897-15(2020) ..... Aggregate for Job-Mixed Portland Cement Based Plasters
C926-20 ..... Application of Portland Cement-Based Plaster
C932-06(2019) ..... Surface-Applied Bonding Compounds for Exterior Plastering
C933-18 ..... Welded Wire Lath
C979/C979M-16 ..... Pigments for Integrally Colored Concrete
C1002-18 ..... Steel Self-Piercing Tapping Screws for the Application of Gypsum Panel Products or Metal Plaster Bases to Wood Studs or Steel Studs
C1063-19a ..... Installation of Lathing and Furring to Receive Interior and Exterior Portland Cement-Based Plaster
E90-09(2016) ..... Test Method for Laboratory Measurement of Airborne Sound Transmission Loss of Building Partitions and Elements
E119-20..... Test Methods for Fire Tests of Building Construction and Materials
E413-16..... Classification for Rating Sound Insulation

C. Commercial Item Description (CID):

A-A-55615-95(R2006) ..... Shield, Expansion (Wood Screw and Lag Bolt Self-Threading Anchors)

PART 2 - PRODUCTS

2.1 ACCESSORIES FOR CEMENT PLASTER:

A. Cornerbeads: Fabricated from zinc-coated (galvanized) steel or plastic.
   1. Smallnose cornerbead with expanded flanges; use unless otherwise indicated on construction documents.
   2. Smallnose cornerbead with perforated flanges; use on curved corners.
   3. Smallnose cornerbead with expanded flanges reinforced by perforated stiffening rib; use on columns and for finishing unit masonry corners.

2.2 FASTENERS

A. Tie, wire, screws, staples, clips, nails, and other fasteners ASTM C1063, except as otherwise specified.

B. Provide fasteners for securing metal plastering bases having heads, or inserted through washers large enough to engage two (2) strands (two (2) on each side of screw) of the metal plastering base.
C. For fire rated construction; provide fasteners of type and size as used in fire rated test.
D. Screws: ASTM C1002.
E. Expansion Shields: CID A-A-55615, of the Type and Class applicable.

2.3 CEMENT

A. Portland: ASTM C150/C150M, Type I.
B. Masonry: ASTM C91/C91M, Type N.
C. //White where required for white finish coat.

2.4 LIME

A. ASTM C206, Type S; or ASTM C207, Type S.

2.5 AGGREGATES (SAND)

A. ASTM C897, graded as required to suit texture of finish specified.
B. //White where white finish coat is specified.

2.6 BONDING AGENT

A. ASTM C932.

PART 3 - EXECUTION

3.1 METAL PLASTERING BASES (LATH) LOCATIONS

A. Where plaster is required on solid concrete or masonry bases, metal plastering bases are not required, unless shown on the construction documents.

3.2 INSTALLING PLASTERING ACCESSORIES

A. Install accessories in accordance with ASTM C1063, except as otherwise specified.
    1. Set plastering accessories plumb, level and true to line, neatly mitered at corners and intersections, and securely attach to supporting surfaces.
    2. Install in one (1) piece, within the limits of the longest commercially available lengths.

B. Corner Beads: // External-corner reinforcement // // corner bead // at exterior corners, as required to establish grounds, and where shown on construction documents.

C. Strip Lath:

1. Install centered over joints between dissimilar materials, such as hollow tile, brick, concrete masonry units, concrete, and joints with expanded lath on framing or furring, where both such surfaces are required to be plastered and are in contact with each other in same plane, except where expansion joints and casing beads are required.
2. Wire tie or fasten strip lath to base along both edges at not over 152 mm (6 inches) on centers.

D. Casing Beads:

1. Provide at locations where shown on construction documents and at following locations where plaster terminates to provide finish trim:
    a. Against non-plastered surfaces such as masonry, concrete, and wood.
    b. Against trim of steel frames and trim of other materials and equipment, except where trim overlaps plaster.
    c. Around perimeter of openings except where edge is covered by flanges. Locate to conform to dimensions shown on shop drawings.
    d. Where plaster for new walls or furring (vertical or horizontal) terminates against existing construction.
    e. Both sides of expansion and control joints unless shown otherwise on construction documents.
2. Provide at perimeter angles between walls and ceilings so as to provide floating angle (unrestrained) construction in accordance with ASTM C1063.

3.3 SURFACE PREPARATION OF SOLID BASES

A. Surfaces that are to receive plaster are to be prepared and conditioned in accordance with ASTM C926, except as otherwise specified.

B. New surfaces of masonry and concrete:

1. Remove projections and clean concrete surface of form oil.
2. Fill depressions, holes, cracks and similar voids flush with Portland cement plaster to provide substrate within the tolerance specified in ASTM C926.
3. Use bonding agent.

C. Existing surfaces of concrete and masonry:
    1. Clean surface of dirt and other foreign matter which will prevent bond.
    2. Apply dash bond coat or bonding agent as specified herein.
    3. Where existing surfaces have a coating such as paint or bituminous waterproofing apply metal plastering base as indicated.

3.4 PORTLAND CEMENT BASED PLASTER

A. Provide portland cement based plaster where cement plaster is shown and specified, and as follows:
    1. Three-Coat work is to be used over all metal plastering bases, with or without solid backing.
    2. Two-Coat work may only be used over solid bases conforming to requirements of Paragraph, SURFACE PREPARATION OF SOLID BASES.
B. Proportion, mix and apply plaster in accordance with ASTM C926, except as otherwise specified.
    1. Provide air entrained plaster for all exterior work.
    2. Finish coat is a smooth troweled finish.

END OF SECTION

SECTION 09 91 00
PAINTING

PART 1 - GENERAL

1.1 SECTION INCLUDES

A. Inspection of surfaces.
B. Protection of surface.
C. Surface preparation.
D. Existing Work
E. Application of exterior and interior painting.
F. Cleaning.
G. Schedule of painting – exterior

1.2 RELATED SECTIONS

A. Section 05 50 00 – Metal Fabrications.
B. Section 06 40 23 – Interior Architectural Woodwork.
C. Section 08 12 13 – Standard Hollow Metal Frames.
D. Section 08 13 13 – Standard Hollow Metal Doors.
E. Section 09 21 16 – Gypsum Board Assemblies.

1.3 REFERENCES

A. ASTM D16 -Definitions of Terms Relating to Paint, Varnish, Lacquer, and Related Products.

B. ASTM D523 – Test Method for Specular Gloss

C. ASTM D660 - Method of Evaluating Degree of Checking of Exterior Paints.

D. ASTM D3276 - Recommended Guide for Paint Inspectors.

E. 40 CFR 59, Subpart D – National Volatile Organic Compound Emission Standards for Architectural Coatings.

F. Master Painters Institute (MPI) – MPI Approved Product List.

G. Master Painters Institute (MPI)– MPI Architectural Painting Specifications Manual.

H. Steel Structures Painting Council (SSPC) – Steel Structures Painting Manual.

1.4 QUALITY ASSURANCE

A. Manufacturer: Company specializing in manufacturing products Specified in this section with minimum three years documented experience.

B. Applicator Qualifications: Engage an experienced applicator to perform painting work who has specialized in the application of painting systems similar to that required for

this project and who is acceptable to by manufacturer of specified paint.

C. Applicator Certification: Obtain written certification from manufacturer of paints certifying that Applicator is approved by manufacturer for application of specified paint systems. Provide copy of certification to Architect-Engineer prior to award of paint work.

D. Applicator's Field Supervision: Require Applicator to maintain a full-time supervisor/foreman who is on jobsite during times that paint work is in progress and who is experienced in application of paint systems similar to type and scope required for this Project.

1.5 SUBMITTALS

A. Section 01 33 40 – Shop Drawings, Product Data and Samples.
B. Product Data: Submit data on finishing products.
C. NOT USED
D. Samples:

1. Submit two paper chip samples, 2 x 2 inch in size illustrating range of colors and textures available for each surface finishing product scheduled.

2. Submit two painted samples, illustrating selected colors and textures for each color and system selected with specified coats cascaded. Submit on tempered hardboard 2 x 2 inch in size.

E. Manufacturer's Installation Instructions: Submit special surface preparation procedures, substrate conditions requiring special attention, and any other specific requirements.

1.6 CLOSEOUT SUBMITTALS

A. Operation and Maintenance Data: Submit data on cleaning, touch-up, and repair of painted and coated surfaces.

1.7 MOCKUP

A. Construct mockup panel, 5 feet long by 5 feet wide, illustrating coating color, texture, and finish.
B. Locate where directed by Architect/Engineer.
C. Incorporate accepted mockup as part of Work.

1.8 DELIVERY, STORAGE, AND HANDLING

A. Deliver products to site in sealed and labeled containers; inspect to verify acceptability.

B. Container Label: Include manufacturer's name, type of paint, brand name, lot number, brand code, coverage, surface preparation, drying time, cleanup requirements, color designation, and instructions for mixing and reducing.

C. Paint Materials: Store at minimum ambient temperature of 45 degrees F (7 degrees C) and maximum of 90 degrees F (32 degrees C), in ventilated area, and as required by manufacturer's printed instructions.

1.9 ENVIRONMENTAL REQUIREMENTS

A. Do not apply materials when surface and ambient temperatures are outside temperature ranges required by paint product manufacturer.

B. Do not apply exterior coatings during rain when relative humidity is outside humidity ranges, or moisture content of surfaces exceed those required by paint product manufacturer.

C. Provide lighting level of 80 ft candle measured mid-height at substrate surface.

1.10 WARRANTY

A. Furnish one year manufacturer warranty for paints and coatings.

1.11 EXTRA MATERIALS

A. Furnish extra materials, from the same product run, that match products installed and that are packaged with protection covering for storage and identified with labels describing contents.

1. Paint: 5 percent, but not less than 2 gallons of each material and color applied.

PART 2 - PRODUCTS

2.1 ACCEPTABLE MANUFACTURERS - PAINTING

A. Basis of Design:
1. The Sherwin – Williams Company.

B. Other Acceptable Manufacturers:
1. Benjamin Moore.
2. BLP Mobile Paints Manufacturing.
3. Glidden Coatings.
4. PPG Architectural Finishes.

2.2 MATERIALS - PAINTING

A. MPI Standards: Provide products that comply with MPI standards indicated and that are listed in its “MPI Approved Products List”.

B. Material Compatibility:

1. Provide materials for use within each paint system that are compatible with one another and substrates indicated, under conditions of service and application as demonstrated by manufacturers, based on testing and field experience.

2. For each coat in paint system, provide product recommended in writing by manufacturers of topcoat for use in paint system and on substrate indicated.

C. VOC Content: Products shall comply with VOC limits of authorities having jurisdiction and, for paints and coatings applied at Project site, the following VOC limits, exclusive of colorants added to a tint base, when calculated according to 40 CFR 59, Subpart D (EPA Method24).

1. Flat Paints and Coatings: 50 g/L.

2. Nonflat Paints and Coatings: 150 g/L.

3. Dry-Fog Coatings: 400 g/L.

4. Primers, Sealers, and Undercoaters: 200 g/L.

5. Anticorrosive and Antirust Paints Applied to Ferrous Metals: 250gL.

6. Pretreatment Wash Primers: 420 g/L.

7. Shellacs, Clear: 730 g/L.

8. Shellacs, Pigmented: 550 g/L.

D. Colors: As selected by Architect from manufacturer's full range.

PART 3 - EXECUTION

3.1 INSPECTION OF SURFACES

A. Thoroughly examine surfaces scheduled to be painted prior to commencement of work. Report in writing to Architect/Engineer, any condition that may potentially affect proper application. Do not commence until such defects have been corrected.

B. Correct defects and deficiencies in surfaces which may adversely affect work of this Section.

C. Test shop applied primer for compatibility with subsequent cover materials.

D. Measure moisture content of surfaces using electronic moisture meter. Do not apply finishes unless moisture content of surfaces are below the following maximums:

1. Plaster and Gypsum Wallboard: 12 percent.

2. Concrete: 12 percent.

3.2 PROTECTION OF SURFACES

A. Adequately protect other surfaces from paint and damage. Repair damage as a result of inadequate or unsuitable protection.

B. Furnish sufficient drop cloths, shields, and protective equipment to prevent spray or droppings from fouling surfaces not being painted and in particular, surfaces within storage and preparation area.

C. Place cotton waste, cloths, and material which may constitute a fire hazard in closed metal containers and remove daily from site.

D. Remove electrical plates, surface hardware, fittings and fastenings, prior to painting operations. These items are to be carefully stored, cleaned, and replaced on completion of work in each area. Do not use solvent to clean hardware that may remove permanent lacquer finish.

3.3 SURFACE PREPARATION

A. Surfaces: Correct defects and clean surfaces capable of affecting work of this section. Remove or repair existing coatings exhibiting surface defects.

B. Marks: Seal with shellac those which may bleed through surface finishes.

C. Gypsum Board Surfaces: Fill minor defects with filler compound.
Spot prime defects after repair.

D. Galvanized Surfaces: Remove surface contamination and oils and wash with solvent. Apply coat of etching primer.

E. Concrete Surfaces Scheduled to Receive Paint Finish: Remove dirt, loose mortar, scale, salt or alkali powder, and other foreign matter. Remove oil and grease with solution of tri-sodium phosphate; rinse well and allow to dry. Remove stains caused by weathering of corroding metals with solution of sodium metasilicate after thoroughly wetting with water. Allow to dry.

F. Plaster Surfaces: Fill hairline cracks, small holes, and imperfections with latex patching plaster. Make smooth and flush with adjacent surfaces. Wash and neutralize high alkali surfaces.

G. Uncoated Steel and Iron Surfaces: Remove grease, mill scale, weld splatter, dirt, and rust. Where heavy coatings of scale are evident, remove by hand power tool wire brushing or sandblasting; clean by washing with solvent. Apply treatment of phosphoric acid solution, ensuring weld joints, bolts, and nuts are similarly cleaned. Spot prime paint after repairs.

H. Shop Primed Steel Surfaces: Sand and scrape to remove loose primer and rust. Feather edges to make touch-up patches inconspicuous. Clean surfaces with solvent. Prime bare steel surfaces. Prime metal items including shop primed items.

I. Metal Doors Scheduled for Painting: Prime metal door top and bottom edge surfaces

J. Wood/Wood doors: Clean surfaces of dirt, oil, and other foreign substances with scrapers, mineral spirits, and sandpaper, as required. Sand surfaces exposed to view smooth and dust off.

a. Scrape and clean small, dry, seasoned knots, and apply a thin coat of white shellac or other recommended knot sealer before applying primer. After priming, fill holes and imperfections in finish surfaces with putty or plastic wood filler. Sand smooth when dried.
b. Prime, stain, or seal wood to be painted immediately on delivery. Prime edges, ends, faces, undersides, and back sides of wood, including cabinets, counters, cases, and paneling.
c. If transparent finish is required, backprime with spar varnish.
d. Backprime paneling on interior partitions where masonry, plaster, or other wet wall construction occurs on backside.
e. Seal tops, bottoms, and cutouts of unprimed wood doors with a heavy coat of varnish or sealer immediately on delivery.

3.4 EXISTING WORK

A. Extend existing paint and coatings installations using materials and methods compatible with existing installations and as specified.

3.5 APPLICATIONS

A. Apply each coat at proper consistency.

B. Each coat of paint is to be slightly darker than preceding coat unless otherwise approved by Architect/Engineer.

C. Sand lightly between coats to achieve required finish.

D. Do not apply finishes on surfaces that are not sufficiently dry.

E. Allow each coat of finish to dry before following coat is applied, unless directed otherwise by manufacturer.

F. Prime top and bottom edges of metal doors with enamel undercoat when they are to be painted.

3.6 EXTERIOR AND INTERIOR PAINTING

A. The work includes surface preparation, painting and finishing of interior and exterior exposed items and surfaces throughout the project, except as otherwise indicated. Surface preparation, priming, and coats of paint specified are in addition to shop priming and surface treatment specified under other sections of the work.

B. Paint all exposed surfaces whether or not colors are designed in schedules, except where the natural finish of the material is specifically noted as a surface not to be painted. Where items or surfaces are not specifically mentioned, paint these the same as adjacent similar materials or areas. If color of finish is not designated, the

Architect/Engineer will select these from standard colors available for the material systems specified.

3.7 PAINT SCHEDULE

1. Exterior Plastered Walls:
   a. One Coat
      1) SW Loxon Concrete & Masonry Primer/Sealer or approved equal
   b. Two Coats
      1) SW Superpaint Exterior Acrylic Latex Flat Paint or approved equal
2. Interior Walls:
   a. One Coat
      1) SW General Purpose Interior Primer or approved equal
   b. Two Coats
      1) SW Superpaint Exterior Flat Paint or approved equal
3. Exterior Galvanized Metals, Metal Doors and Structural Steel Columns:
   a. One Coat
      1) SW All Surface Enamel Oil Primer or approved equal.
   b. Two Coats
      1) SW Industrial Enamel Protective & Marine Coating.
4. Exterior Structural Joists and Metal Roofs:
   a. Two Coats
      1) Dryfall Coating

3.8 MECHANICAL AND ELECTRICAL EQUIPMENT

A. Refer to mechanical and electrical Sections with respect to identification banding of equipment, ducting, piping and conduit.

B. Remove grilles, covers, and access panels for mechanical and electrical systems from location and paint separately.

C. Finish paint primed equipment to color selected.

D. Prime and paint insulated and bare pipes, conduits, boxes, insulated and bare ducts, hangers, brackets, collars and supports, except where items are plated or covered with a pre-finished coating.

E. Replace identification markings on mechanical or electrical equipment when painted over or spattered.

F. Paint interior surfaces of air ducts, convector and baseboard heating cabinets that are visible through grilles and louvers with one coat of flat black paint, to limit of sight line. Paint dampers exposed immediately behind louvers, grilles, convector and baseboard cabinets to match face panels.

G. Paint exposed conduit and electrical equipment occurring in finished areas. Color and texture to match adjacent surfaces.

H. Paint both sides and edges of plywood backboards for electrical equipment before installing backboards and mounting equipment on them.

I. Color code equipment, piping, conduit and exposed ductwork in accordance with requirements indicated. Color banding and identification (flow arrows, naming, numbering, etc.)

3.9 PAINTING NOT INCLUDED

A. Shop Priming: Unless otherwise specified, shop priming of ferrous metal items is included under the various sections for structural steel, miscellaneous metals, hollow metal work, and fabricated components. Touch-up of damaged primed surfaces is included in the painting work.

B. Prefinished Items: Do not include painting when factory-finishing is specified, except all roof mounted prefinished mechanical equipment is to be field-painted.

C. Concealed Surfaces: Painting is not required on surfaces such as walls or ceilings in concealed areas and generally inaccessible areas, foundation spaces, furred areas, utility tunnels.

D. Finish Metal Surfaces: Architectural metal surfaces of anodized aluminum, stainless steel, chromium plate, copper, bronze, and similar finished materials will not require finish painting.

E. Operating Parts and Labels: Moving parts of operating units, mechanical and electrical parts, such as valve and damper operations, linkages, sinkages, sensing devices, motor and fan shafts will not require finish painting, unless otherwise indicated. Do not paint over any code-required labels, such as Underwriters' Laboratories and Factory Mutual, or any equipment identification, performance rating, name or nomenclature plates.

3.10 CLEANING

A. As work proceeds and upon completion, promptly remove paint where spilled, splashed, or spattered.

B. During progress of work keep premises free from any unnecessary accumulation of tools, equipment, surplus materials, and debris.

C. Upon completion of work leave premises neat and clean, to the satisfaction of Architect/Engineer.

END OF SECTION

SECTION 23 34 00
EXHAUST FAN CAPS

PART 1 – GENERAL

1.1 DESCRIPTION

A. Curb Mounted Exhaust Fan and Exhaust Fan Cover

1.2 RELATED WORK

A. Section 01 GENERAL REQUIREMENTS.
B. Section 01 SHOP DRAWINGS, PRODUCT DATA, and SAMPLES.
C. SECTION 07 52 19- MODIFIED BITUMEN SHEET ROOFING

1.3 SUBMITTALS

A. Submittals, including number of required copies, shall be submitted in accordance with Section 01340, SHOP DRAWINGS, PRODUCT DATA, AND SAMPLES.
B. Manufacturers Literature and Data Including: Full item description and optional features and accessories. Include dimensions, weights, materials, applications, standard compliance, model numbers, size, and capacity.

C. Shop Drawings: Show fabrication and installation details for metal components.

1. Penetrations through fire-rated and other partitions.
2. Accessories, including bolts and other premanufactured items.

1.4 QUALITY ASSURANCE

A. Corrosion Protection:
1. When applicable, any steel shall be stainless steel or steel mill-galvanized, or phosphatized and coated with minimum two coats, corrosion resistant enamel paint. Manufacturer’s paint and paint system shall meet the minimum requirements of ASTM D1735 water fog, ASTM B117 salt spray, ASTM D3359 adhesion, and ASTM G152 and ASTM G153 for carbon arc light apparatus for exposure of non-metallic material.

PART 2 – PRODUCTS

2.1 Construction: All exhaust fans and covers shall be all-aluminum construction. The exhaust fan shall be equipped with gravity self-acting back draft damper to be installed flush with face of curb.

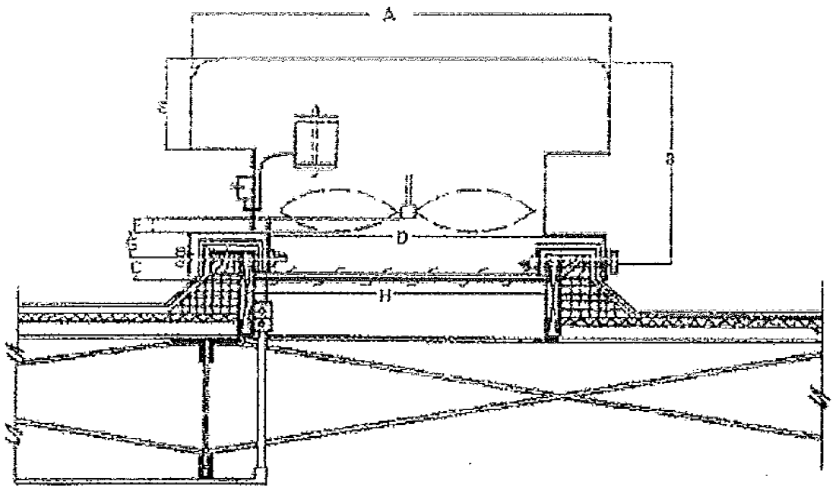

Fan Size	A	B	C	D	E	F	G	H
36"	64 ½"	37"	2 ½"	40 ½"	15"	7 ½"	14 ½"	37"

2.2. Motor:

a. The fan motor power supply must be feed through a liquid tight flexible conduit (3 wire).

b. The fan motor power supply at the building roof must be controlled by a 30A-2P-3W-S/N-240VAC, NMA 3R unfussed disconnect.

Motor Model	HP	Volt	RPM	Hz	PH	Code	AMD
**5KC47UG694 (ball bearing)	1 hp	115 / 230V	1,725rpm	60Hz	1	*K	40°C

*K=Totally enclosed

2.3. Heater and starter specifications: The contractor shall furnish the motor starting switch complete with heater. Heater size shall be equal or similar to Cutler Hammer cat. # 9101-M74. Continuous rated motors with a service factor of 1.15 to 1.25, select a heater from the heater table. For continuous rated motors with a service factor of 1 multiply the

motor full load current by 0.9 and use this value to select the heater. Starter tripping current in 40C ambient is the minimum value of full load current multiplied by 1.25.

Heater for CR101Y
Heater Amperage Based on 90°C Wire

Motor Full Load Amperes	Heater Number CR123	Motor Full Load Amperes	Heater Number CR123
.44-.49	H005A	3.02-3.27	H377A
.49-.53	H061A	3.28-3.56	H410A
.54-.58	H067A	3.57-3.88	H446A
.59-.65	H074A	3.89-4.22	H486A
.66-.71	H082A	4.23-4.60	H529A
.72-.78	H090A	4.61-5	H575A
.79-.86	H099A	5.01-5.43	H625A
.87-.95	H108A	5.44-5.90	H680A
.96-1.04	H120A	5.91-6.41	H739A
1.05-1.14	H132A	6.42-6.98	H802A
1.15-1.25	H144A	6.99-7.6	H873A
1.26-1.37	H158A	7.61-8.25	H950A
1.38-1.49	H172A	8.26-8.95	H103B
1.5-1.63	H188A	8.96-9.75	H112B
1.64-1.78	H205A	9.76-10.6	H122B
1.79-1.95	H224A	10.7-11.4	H132B
1.96-2.13	H245A	11.5-12.5	H144B
2.14-2.32	H267A	12.6-13.6	H157B
2.33-2.53	H291A	13.7-14.8	H171B
2.54-2.76	H317A	14.9-16	H186B
2.77-3.01	H346A		

2.2 SEALANT MATERIALS

B. Joint and Seam Tape: 2 inches wide; glass-fiber-reinforced fabric.

C. Tape Sealing System: Woven-fiber tape impregnated with gypsum mineral compound and modified acrylic/silicone activator to react exothermically with tape to form hard, durable, airtight seal.

D. Water-Based Joint and Seam Sealant: Flexible, adhesive sealant, resistant to UV light when cured, UL 723 listed, and complying with NFPA requirements for Class 1 ducts.

E. Solvent-Based Joint and Seam Sealant: One-part, nonsag, solvent-release-curing, polymerized butyl sealant formulated with a minimum of 75 percent solids.

F. Flanged Joint Mastic: One-part, acid-curing, silicone, elastomeric joint sealant complying with ASTM C 920, Type S, Grade NS, Class 25, Use O.

G. Flange Gaskets: Butyl rubber or EPDM polymer with polyisobutylene plasticizer.

2.3 SUPPORTS

A. Building Attachments: Concrete inserts fasteners, or structural-steel fasteners appropriate for construction materials to which anchoring are being attached as specified on drawings.

1. Use fasteners for standard-weight aggregate concretes or for slabs more than 4 inches thick.

2. Exception: Do not use power-actuated concrete fasteners for lightweight-aggregate concretes or for slabs less than 4 inches thick.

B. Anchoring cabling: Vinyl coated ¼" Stainless Steel Type 316 Cable.

C. Turnbuckles & Eye Hooks: Stainless Steel Type 316

PART 3 - EXECUTION

3.1 INSTALLATION

A. Aluminum side panels and hood must be bolted to the exhaust fan base with screws, nuts and pressure washers, The contractor must use min. two screws, nuts and pressure washers on each side of the exhaust fan – screw dimensions are 8" x 3/4".

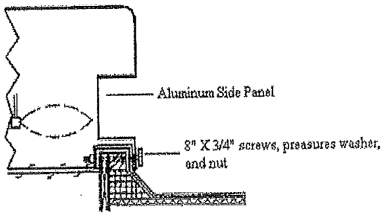

B. Fan must be mounted on heavy gage flange inside of side panels, the contractor must balance the motor pulley with fan pulley. The motor must be statically mounted on vibration absorbing bushings, and the drive belt must be tightening adequately.

C. Install exhaust fan in accordance with manufacturer's instructions.

D. Align components true and straight.

D. Attach equipment to curbs with mechanical bolts as specified.

END OF SECTION

PUERTO RICO
INDUSTRIAL DEVELOPMENT COMPANY
PRIDCO

SUPPLEMENTARY TECHNICAL SPECIFICATIONS

FOR THE FOLLOWING PROPERTY:
DI: 219300
BUILDING: S072906500
PW:7779
LOCATION: BO. CANAS, PONCE, PUERTO RICO

PRIDCO FEMA PA-4339-DR-PR
SOUTH REGION, PUERTO RICO
BID NUMBER: S3-1A

Prepared by

ECRE
ECR ENGINEERING

ELIUD J. VEGA VÁZQUEZ
INGENIERO
LICENCIADO
LIC. # 20541
PUERTO RICO

SEPTEMBER 24, 2025

SUPPLEMENTARY TECHNICAL SPECIFICATIONS

PRIDCO FEMA PA-4339-DR-PR
SOUTH REGION, PUERTO RICO
BID NUMBER: S3-1A

ISSUED FOR BID

TECHNICAL SPECIFICATIONS INDEX

Section No.	Description	Total No. of Pages
01 10 00	SUMMARY OF WORK	
01 34 00	SHOP DRAWINGS, PRODUCT DATA AND SAMPLES	
01 71 00	CLEANING	
02 21 00	SITE CLEARING	
02 41 19	SELECTIVE DEMOLITION	
03 01 00	MAINTENANCE OF CONCRETE	
03 30 00	CAST IN PLACE CONCRETE	
07 52 16	MODIFIED BITUMEN SHEET ROOFING	
08 13 13	HOLLOW METAL DOORS	
09 24 00	PORTLAND CEMENT PLASTER	
09 91 00	PAINTING	
23 34 00	EXHAUST FANS	
32 31 13	GALVANIZED CHAIN LINK FENCE AND GATES	

END OF TABLE OF CONTENTS

SECTION 01 10 00
SUMMARY OF WORK

PART 1 – GENERAL

1.1 SECTION INCLUDES

A. Project Information.

B. Introduction

C. Work covered by Contract Documents.

D. Access to site.

E. Work restrictions.

F. Specification and drawing conventions.

G. Miscellaneous provisions.

H. Scope of Work.

1.2 RELATED SECTIONS

A. OWNER'S STANDARD SPECIFICATIONS

1.3 PROJECT INFORMATION

A. Project Identification: PRIDCO FEMA PA-4339-DR-PR
SOUTH REGION, PUERTO
RICO BID NUMBER: S3-1A

B. Project Location: Ponce, PR

1.4 INTRODUCTION

Industrial building used (leased) for manufacturing and commercial activities damaged by high winds, wind driven rain and water intrusion during the impact of Hurricane María in September 20, 2017. Damages were documented and scope of work for repairs were defined in the Contract Documents.

1.5 WORK COVERED BY CONTRACT DOCUMENTS

A. The Work of Project is defined by the Contract Documents and consists of the following:

1. General Improvements as covered in the Project Drawings and Specifications

2. The Contractor shall furnish all necessary materials, labor, supervision and any other

necessary incidental required to complete the Scope of Work as described herein or as indicated on the drawings and related specifications.

3. All Work of the Project shall be designed and constructed in accordance with the Requirements of the Contract Documents, and all applicable Building Codes and Regulations.

B. Type of Contract:

1. Project will be constructed under a Lump Sum (Single Prime Contract) unless otherwise noted on the Bid Package.

1.6 SPECIFICATION AND DRAWING CONVENTIONS

A. Specification Content: The Specifications use certain conventions for the style of language and the intended meaning of certain terms, words, and phrases when used in particular situations. These conventions are as follows:

1. Imperative mood and streamlined language are generally used in the Specifications. The words "shall," "shall be," or "shall comply with," depending on the context, are implied where a colon (:) is used within a sentence or phrase.

2. Specification requirements are to be performed by Contractor unless specifically stated otherwise.

B. Division 01 General Requirements: Requirements of Sections in Division 01 apply to the Work of all Sections in the Specifications.

C. Drawing Coordination: Requirements for materials and products identified on Drawings are described in detail in the Specifications. One or more of the following are used on Drawings to identify materials and products:

1. Terminology: Materials and products are identified by the typical generic terms used in the individual Specifications Sections.

2. Abbreviations: Materials and products are identified by abbreviations scheduled on Drawings.

3. Keynoting: Materials and products are identified by reference keynotes referencing Specification Section numbers found in this Project Manual.

PART 2 – NOT USED

PART 3 – NOT USED

END OF SECTION

SECTION 01 34 00
SHOP DRAWINGS, PRODUCT DATA AND SAMPLES

PART 1 - GENERAL

1.01 GENERAL CONDITIONS

A. Refer to Bid Package for Owner's Requirements.

B. In the event of conflict between requirements of the General Conditions and this Section covering shop drawings, product data and samples, the requirements of Bid Package govern. Unaltered provisions remain in effect.

1.02 DESCRIPTION

A. Submit shop drawings, product data and samples required by specification sections to the following: Owner, Project Manager, Project Architect and/or Project Engineer and any other Owner's Representative during the Construction.

B. Prepare and submit the Construction Schedule, a separate schedule listing dates for submission and dates reviewed shop drawings, product data and samples will be needed for each product.

PART 2 - PRODUCTS

2.01 SHOP DRAWINGS

A. Submit one digital PDF drawing to be distributed via email and one print. Include fabrication, erection, layout and setting drawings and other such drawings as required under various sections of the specifications until final approval is obtained. Reproduction of Contract Drawings will not be used for Shop Drawings.

B. Date and mark shop drawings to show name of the Project, the Architect, Contractor, originating Subcontractor, Manufacturer or Supplier, and separate details as pertinent.

C. Completely identify on shop drawings specification section and locations at which materials or equipment are to be installed.

2.02 PRODUCT DATA

A. Submit sufficient copies of manufacturer's descriptive data including catalog sheets for materials, equipment and fixtures, showing dimensions, performance characteristics and capacities, wiring diagram and controls, schedule and other pertinent information as required.

B. Submit brochures and other submittal data that cannot be reproduced economically in such quantities as to allow the Architect to retain two (2) copies of each after review. Mark product data to show the name of the Project, Architect, Contractor, originating Subcontractor, Manufacturer or Supplier, and separate details if pertinent.

C. Completely identify on product data specification section and location at which materials or equipment are to be installed.

D. Clearly mark to show pertinent data applicable to the Project.

2.03 SAMPLES

A. Submit physical examples of materials in duplicate when required by specification sections to illustrate materials, workmanship or to establish standards by which completed work shall be judged.

B. Date samples and mark to show the name of the project, Architect, Contractor, originating Subcontractor, Manufacturer or Supplier and separate details if pertinent.

C. Completely identify on samples specification section and location in which materials or equipment are to be installed.

D. Provide wall and ceiling finish material samples from the manufacturer or supplier with attached flame resistance testing classification information (Class A, B or C) for use in Section 01700 Contract Closeout.

E. Provide floor finish material samples from the manufacturer or supplier with attached critical radiant flux testing classification information (Class I or Class II) for use in Section 01700 Contract Closeout.

2.04 CONTRACTOR RESPONSIBILITIES

A. Review shop drawings, product data and samples prior to submission to the Architect.

B. Include on submittals the Contractor's stamp, initialed or signed, certifying review of submittals, verification of field dimensions and compliance with Contract Documents. Shop drawings, product data and samples not so stamped, and checked and approved by the Contractor will not be reviewed by the Architect, but will be returned to the Contractor. Shop drawings stamped and signed as approved by the Contractor but showing evidence that they have not been carefully checked by the Contractor may be returned to the Contractor to be re-checked and re-submitted to the Architect.

2.05 SUBSTITUTIONS

A. Approval required:
   1. The Contract is based on the standards of quality established in the Contract Documents.
   2. All products proposed for use, including those specified by required attributes and performance, require approval by the Architect before being incorporated into the Work.
   3. Do not substitute materials, equipment or methods unless such substitution has been specifically approved for this Work by the Architect.

B. “Or equal”:

1. Where the phrase “or equal” or “or equal as approved by the Architect” occurs in the Contract Documents, do not assume that materials, equipment or methods will be approved as equal unless the items have been specifically approved for this Work by the Architect.
2. Substitutions shall be judged against the specified item for quality, durability, operation, appearance, and other applicable qualities including fitness for use in this situation. The decision of the Architect is final.

PART 3 - EXECUTION

3.01 SUBMISSION REQUIREMENTS

A. Schedule submissions at least two weeks before date reviewed submittals will be needed.

B. Accompany submittals with transmittal letters containing the date, project title, Contractor’s name and address, number of each shop drawing, product data and samples submitted, and notification of deviation from Contract Documents.

1. Material Safety Data Sheet
   Contractor shall furnish to the Architect, for review, four (4) copies of Material Safety Data Sheets (MSDS) for all products as specified or required. Allow ample time for Architect’s comment and review.

   Do not install products until confirmation of review is obtained.

   MSDS copies should be included at the same submittal with shop drawings or product submittal. The following products must include the MSDS copy with the shop drawing or submittal:
   a) Mechanical Insulation
   b) Mastic or Adhesive
   c) Ceiling Tiles or other Composite Materials
   d) Sealants or Caulking
   e) Materials containing or releasing volatile organic compounds (VOC’s)
   f) Paints, Varnishes, Stains or other similar coatings

2. Flame Spread Certificates
   Contractor shall furnish to the Architect, for review, four (4) copies of Flame Spread Certificates for all products as specified or required.

   Allow ample time for Architect’s comment and review.

   Do not install products until confirmation of review is obtained.

   Flame Spread Certificate copies should be included at the same submittal with shop drawings or product submittal. The following products must include the Flame Spread Certificate copy with the shop drawing or submittal:
   a) Carpet
   b) Wallcovering
   c) Fabrics

d) Cubicle curtains

3.02 RESUBMISSION REQUIREMENTS

A. Shop Drawings: Revise initial drawings as required and resubmit as specified for initial submittals. Clearly identify on drawings any changes which have been made other than those requested by the Architect.

B. Product Data and Samples: Submit new datum and samples as required for initial submittal.

3.03 DISTRIBUTION OF SHOP DRAWINGS AND SUBMITTALS

A. Contractor is still responsible for obtaining and distributing prints of shop drawings as necessary after as well as before final approval and for coordination of submittals between his subcontractors and suppliers.

B. Make prints of approved shop drawings which carry the Architect's appropriate stamp.

C. The cost of scanning and printing is the responsibility of the Contractor.

END OF SECTION

SECTION 01 71 00
CLEANING

PART 1 - GENERAL

1.01 DESCRIPTION

A. Work included: Throughout the construction period, maintain the building, work area and site in a standard of cleanliness as described in this Section.

B. Related work:
   1. Documents affecting work of this Section include, but are not necessarily limited to, General Conditions, Supplementary Conditions, and Sections in Division 1 of these Specifications.
   2. In addition to standards described in this Section, comply with requirements for cleaning as described in pertinent other Sections of these Specifications.

1.02 QUALITY ASSURANCE

A. Conduct daily inspection, and more often, if necessary, to verify that requirements for cleanliness are being met.

B. In addition to the standards described in this Section, comply with pertinent requirements of governmental agencies having jurisdiction.

PART 2 - PRODUCTS

2.01 CLEANING MATERIALS AND EQUIPMENT

A. Provide required personnel, equipment, and materials needed to maintain the specified standard of cleanliness.

2.02 COMPATIBILITY

A. Use only the cleaning materials and equipment which are compatible with the surface being cleaned, as recommended by the manufacturer of the material.

PART 3 - EXECUTION

3.01 PROGRESS CLEANING

A. General:
   1. Retain stored items in an orderly arrangement allowing maximum access, not impeding traffic or drainage, and providing required protection of materials.
   2. Do not allow accumulation of scrap, debris, waste material, and other items not required for construction of this Work.
   3. At least twice each month, and more often if necessary, completely remove all scrap, debris, and waste material from the job site.

4. Provide adequate storage for all items awaiting removal from the job site, observing requirements for fire protection and protection of the ecology.

B. Site:
   1. Daily, and more often if necessary, inspect the site and pick up all scrap, debris, and waste material. Remove such items to the place designated for their storage.
   2. Weekly, and more often if necessary, inspect all arrangements of materials stored on the site. Restack, tidy, or otherwise service arrangements to meet the requirements of subparagraph 3.01-A-1 above.
   3. Maintain the site in a neat and orderly condition at all times.

C. Structures:
   1. Weekly, and more often if necessary, inspect the structures and pick up all scrap, debris, and waste material. Remove such items to the place designated for their storage.
   2. Weekly, and more often if necessary, sweep interior spaces clean.
      a) "Clean," for the purpose of this subparagraph, shall be interpreted as meaning free from dust and other material capable of being removed by use of reasonable effort and a hand-held broom.
   3. As required preparatory to installation of succeeding materials, clean the structures or pertinent portions thereof to the degree of cleanliness recommended by the manufacturer of the succeeding material, using equipment and materials required to achieve the necessary cleanliness.
   4. Following the installation of finish floor materials, clean the finish floor daily (and more often if necessary) at all times while work is being performed in the space in which finish materials are installed.
      a) "Clean," for the purpose of this subparagraph, shall be interpreted as meaning free from foreign material which, in the opinion of the Owner, may be injurious to the finish floor material.
   5. For work performed on continuously operated facilities, premises shall be cleaned on a daily basis and more often as necessary in order to maintain premises free of dust in these instances clean shall be interpreted as meaning free from dust and other material capable of being removed by use of reasonable effort and a hand-held wet mop.

3.02 FINAL CLEANING

A. "Clean," for the purpose of this Article, and except as may be specifically provided otherwise, shall be interpreted as meaning the level of cleanliness generally provided by skilled cleaners using commercial quality building maintenance equipment and materials.

B. Prior to completion of the Work, remove from the job site all tools, surplus materials, equipment, scrap, debris, and waste. Conduct final progress cleaning as described in Article 3.1 above.

C. Site:
   1. Unless otherwise specifically directed by the Architect, broom clean paved areas on the site and public paved areas adjacent to the site.
   2. Completely remove the resultant debris.

D. Structures:
   1. Exterior:
      a) Visually inspect exterior surfaces and remove all traces of soil, waste materials, smudges, and other foreign matter.
      b) Remove all traces of splashed materials from adjacent surfaces.

c) If necessary to achieve a uniform degree of cleanliness, hose down the exterior of the structure.
d) In the event of stubborn stains not removable with water, the Owner may require light sandblasting or other cleaning at no additional cost to the Owner.

2. Interior:
   a) Visually inspect interior surfaces and remove all traces of soil, waste materials, smudges, and other foreign matter.
   b) Remove all traces of splashed material from adjacent surfaces.
   c) Remove paint droppings, spots, stains, and dirt from finished surfaces.
3. Glass: Clean inside and outside surfaces with glass cleaner.
5. Polished surfaces: To surfaces requiring routine application of buffed polish, apply the polish recommended by the manufacturer of the material being polished.

B. Schedule final cleaning as approved by the Owner to Provide to the Owner a completely clean Work.

2.03 CLEANING DURING OWNER'S OCCUPANCY

A. Should the Owner occupy the Work or any portion thereof prior to its completion by the Contractor and acceptance by the Owner, responsibilities for interim and final cleaning shall be as determined by the Owner in accordance with the General Conditions of the Contract.

END OF SECTION

SECTION 02 21 00
SITE CLEARING

PART 1 - GENERAL

1.1 DESCRIPTION OF WORK

A. Work Included: Provide labor, materials and equipment necessary to complete the work of this Section, including but not limited to the following:
   1. Protecting existing trees and vegetation to remain, including temporary fencing for trees in close proximity to construction operations.
   2. Removing existing trees and vegetation indicated to be removed.
   3. Clearing and grubbing.
   4. Stripping and stockpiling topsoil.
   5. Removing above and below grade site improvements.
   6. Disconnecting, capping or sealing of utilities as required.

B. Related Work: The following items are not included in this Section and will be performed under the designated Sections:
   1. Section 02300 - EARTHWORK for soil materials, excavating, backfilling, and site grading and removal of site utilities.
   2. Section 02270 - EROSION AND SEDIMENTATION CONTROLS for required erosion and sedimentation control measures.

1.2 DEFINITIONS

A. Topsoil: Natural or cultivated surface-soil layer containing organic matter and sand, silt, and clay particles; friable, pervious, and black or a darker shade of brown, gray, or red than underlying subsoil; reasonably free of subsoil, clay lumps, gravel, and other objects more than 2 inches in diameter; and free of subsoil and weeds, roots, toxic materials, or other non-soil materials.

B. Tree Protection Zone: Area surrounding individual trees or groups of trees to be protected during construction, and defined by the drip line of individual trees or the perimeter drip line of groups of trees, unless otherwise indicated.

1.3 MATERIAL OWNERSHIP

A. Except for stripped topsoil or other materials indicated to remain the Owner’s property, cleared materials shall become Contractor’s property and shall be removed from Project site.

1.4 SUBMITTALS

A. Photographs sufficiently detailed of existing conditions of trees and plantings, adjoining construction, and site improvements that might be misconstrued as damage caused by site clearing.

B. Record drawings, according to Section 001700 - PROJECT CLOSEOUT identifying and accurately locating capped utilities and other subsurface structural, electrical, and mechanical conditions.

1.5 PROJECT CONDITIONS

A. Traffic: Minimize interference with adjoining roads, streets, walks, and other adjacent occupied or used facilities during site-clearing operations.

1. Do not close or obstruct streets, walks, or other adjacent occupied or used facilities without permission from the Owner and authorities having jurisdiction.
2. Provide alternate routes around closed or obstructed traffic ways if required by authorities having jurisdiction.

B. Salvageable Improvements: Carefully remove items indicated to be salvaged and store on Owner's premises where indicated.

C. Utility Locator Service: Notify utility locator service for area where Project is located before site clearing.

D. Do not commence site clearing operations until erosion and sedimentation control measures are in place.

E. Protection of Existing Improvements: Provide protection necessary to prevent damage to existing improvements indicated to remain in place or outside of the limit of work. Protect improvements on adjoining properties and on Owner's property.
1. Restore improvements damaged by Contractor's clearing activities to their original condition, at no additional expense to the Owner.

PART 2 - PRODUCTS (Not Applicable)

PART 3 - EXECUTION

3.1 PREPARATION

A. Protect and maintain benchmarks and survey control points from disturbance during construction.

B. Locate and clearly flag trees and vegetation to remain or to be relocated.

C. Protect existing site improvements to remain from damage during construction.
1. Restore damaged improvements to their original condition, as acceptable to the Owner.

3.2 TREE PROTECTION

A. Erect and maintain temporary fencing around tree protection zones before starting site clearing. Remove fence when construction is complete.
1. Do not store construction materials, debris, or excavated material within fenced area.
2. Do not permit vehicles, equipment, or foot traffic within fenced area.
3. Maintain fenced area free of weeds and trash.
4. Except as otherwise directed, cutting and trimming of existing trees will not be permitted.

B. Do not excavate within tree protection zones, unless otherwise indicated.

C. Where excavation for new construction is required within tree protection zones, hand clear and excavate to minimize damage to root systems. Use narrow-tine spading forks, comb soil to expose roots, and cleanly cut roots as close to excavation as possible.
1. Cover exposed roots with burlap and water regularly.
2. Temporarily support and protect roots from damage until they are permanently redirected and covered with soil.
3. Coat cut faces of roots more than 1-1/2 inches in diameter with emulsified asphalt or other approved coating formulated for use on damaged plant tissues.
4. Backfill with soil as soon as possible.

D. Repair or replace trees and vegetation indicated to remain that are damaged by construction operations, in a manner approved by the Architect.
   1. Employ an arborist, licensed in jurisdiction where Project is located, to submit details of proposed repairs and to repair damage to trees and shrubs.
   2. Replace trees that cannot be repaired and restored to full-growth status, as determined by the Architect.

3.3 UTILITIES

A. Locate, identify, disconnect, and seal or cap off utilities indicated to be removed.
   1. Arrange with utility companies to shut off indicated utilities.

B. Existing Utilities: Do not interrupt utilities serving facilities occupied by the Owner or others unless permitted under the following conditions, and then only after arranging to provide temporary utility services according to requirements indicated.
   1. Notify the Owner not less than two days in advance of proposed utility interruptions.
   2. Do not proceed with utility interruptions without the Owner's written permission.

C. Removal of underground utilities is included in Section 02300 – EARTHWORK.

D. Removal of underground utilities is included in Division 2 Sections covering site utilities.

3.4 CLEARING AND GRUBBING

A. Remove obstructions, trees, shrubs, grass, and other vegetation to permit installation of new construction.
   1. Do not remove trees, shrubs, and other vegetation indicated to remain or to be relocated.
   2. Cut minor roots and branches of trees indicated to remain in a clean and careful manner where such roots and branches obstruct installation of new construction.
   3. Grind stumps and remove roots, obstructions, and debris extending to a depth of 18 inches below exposed subgrade.
   4. Use only hand methods for grubbing within tree protection zone.
   5. Chip removed tree branches and dispose of off-site.

B. Fill depressions caused by clearing and grubbing operations with satisfactory soil material unless further excavation or earthwork is indicated.
   1. Place fill material in horizontal layers not exceeding a loose depth of 8 inches and compact each layer to a density equal to adjacent original ground.

3.5 TOPSOIL STRIPPING

A. Remove sod and grass before stripping topsoil.

B. Strip topsoil to whatever depths are encountered in a manner to prevent intermingling with underlying subsoil or other waste materials.
   1. Remove subsoil and non-soil materials from topsoil, including trash, debris, weeds, roots, and other waste materials.

C. Stockpile topsoil materials away from edge of excavations without intermixing with subsoil. Grade and shape stockpiles to drain surface water. Cover to prevent windblown dust or contamination by air-borne weed seed.
   1. Limit height of topsoil stockpiles to 72 inches.
   2. Do not stockpile topsoil within tree protection zones.

3.6 EXCESS TOPSOIL

A. Topsoil that has been stripped and stockpiled, but is not needed after the completion of all final topsoil spreading and grassing, shall be stockpiled on site in a location to be approved by the Owner.

3.7 SITE IMPROVEMENTS

A. Remove existing above- and below-grade improvements as indicated and as necessary to facilitate new construction.

B. Remove slabs, paving, curbs, gutters, and aggregate base as indicated.
   1. Unless existing full-depth joints coincide with line of demolition, neatly saw-cut length of existing pavement to remain before removing existing pavement. Saw-cut faces vertically.
   2. Paint cut ends of steel reinforcement in concrete to remain to prevent corrosion.

3.8 DISPOSAL

A. Disposal: Remove surplus soil material, unsuitable topsoil, obstructions, demolished materials, and waste materials including trash and debris, and legally dispose of them off the Owner's property.
   1. Burning on site is prohibited.
   2. Separate recyclable materials produced during site clearing from other non-recyclable materials. Store or stockpile without intermixing with other materials and transport them to recycling facilities.

END OF SECTION

SECTION 02 41 19
SELECTIVE STRUCTURE DEMOLITION

PART 1 GENERAL

1.1 SECTION INCLUDES

A. Examination of areas.
B. Utility services and mechanical/electrical systems.
C. Preparation.
D. General selective demolition procedures.
E. Demolition and removal of selected portions of building or structure.
F. Disposal of demolished materials.
G. Cleaning.
H. Schedule of selective demolition.

1.2 RELATED SECTIONS

A. Division 01 Sections – General Requirements.

1.3 REFERENCES

A. ANSI/ASSE A10.6 – Safety Requirements for Demolition Operations.
B. 40 CFR 82 – Protection of Stratospheric Ozone.
C. OSHA - Standards for the Construction Industry (29 CFR Part 1926).
D. NFPA 241 – Safeguarding Construction, Alteration, and Demolition Operation.

1.4 DEFINITIONS

A. Remove: Detach items from existing construction and legally dispose of them off-site unless indicated to be removed and salvaged or removed and reinstalled.
B. Remove and Salvage: Carefully detach from existing construction, in a manner to prevent damage, and deliver to Owner Representative ready for reuse.
C. Remove and Reinstall: Detach items from existing construction, prepare for reuse, and reinstall where indicated.
D. Existing to Remain: Existing items of construction that are not to be permanently removed and that are not otherwise indicated to be removed, removed and salvaged, or removed and reinstalled.
E. Relocation: Existing item to be removed and relocated to a different location within the

project.

1.5 MATERIALS OWNERSHIP

A. Unless otherwise indicated, demolition waste becomes property of Contractor.

1.6 PREINSTALLATION MEETINGS

A. Predemolition Conference: Conduct conference at Project site.
   1. Inspect and discuss condition of construction to be selectively demolished.
   2. Review structural load limitations of existing structure.
   3. Review and finalize selective demolition schedule and verify availability of materials, demolition personnel, equipment, and facilities needed to make progress and avoid delays.
   4. Review requirements of work performed by other trades that rely on substrates exposed by selective demolition operations.
   5. Review areas where existing construction is to remain and requires protection.

1.7 INFORMATIONAL SUBMITTALS

A. Section 01340 – Submittal Procedures.
B. Proposed Protection Measures: Submit report, including drawings, that indicates the measures proposed for protecting individuals and property, for environmental protection, for dust control and for noise control. Indicate proposed locations and construction of barriers.
C. Schedule of Selective Demolition Activities: Indicate the following:
   1. Coordinate with Construction Duration and Phasing, for sequencing of demolition activities. Detailed sequence of selective demolition and removal work, with starting and ending dates for each activity.
   2. Interruption of utility services. Indicate how long utility services will be interrupted.
   3. Coordination for shutoff, capping, and continuation of utility services.
   4. Use of elevator and stairs.
   5. Coordination of Owner’s continuing occupancy of adjacent buildings.
D. Inventory: Submit a list of items to be removed and salvaged and deliver to Owner Representative prior to start of demolition.
E. Predemolition Photographs or Video: Submit before Work begins.

F. Warranties: Documentation indicated that existing warranties are still in effect after completion of selective demolition.

1.8 CLOSEOUT SUBMITTALS

A. Section 01340 – Submittal Procedures.
B. Inventory: Submit a list of items that have been removed and salvaged.
C. Landfill Records: Indicate receipt and acceptance of hazardous wastes by a landfill facility licensed to accept hazardous wastes.
D. Recycled Receipts: Receipts of recycled materials with volume or weight details.

1.9 FIELD CONDITIONS

A. Construct temporary insulated dust-proof partitions where required to separate areas where noisy or extensive dirt or dust operations are performed. Equip partitions with dustproof doors and security locks.
B. Conditions existing at time of inspection for bidding purpose will be maintained by Owner as far as practical.
C. Notify Architect-Engineer of discrepancies between existing conditions and Drawings before proceeding with selective demolition.
D. Storage or sale of removed items or materials on-site is not permitted.
E. Utility Service: Maintain existing utilities indicated to remain in service and protect them against damage during selective demolition operations.

PART 2 - PRODUCTS

2.1 PERFORMANCE REQUIREMENTS

A. Erect and maintain dust-proof partitions and closures as required to prevent spread of dust or fumes to occupied portions of the building. Coordinate demolition activities with IAQ Plan During Construction required in section 01 81 19 – Indoor Air Quality Requirements.

B. Equip partitions with dust proof doors and security locks if required.





C. Regulatory Requirements: Comply with governing EPA notification regulations before beginning selective demolition. Comply with hauling and disposal regulations of authorities having jurisdiction.
D. Standards: Comply with ANSI/ASSE A10.6 and NFPA 241.
E. Contractors performing hot work (welding, cutting, soldering, brazing, other) shall comply with OSHA's requirements (29 CFR 1926.352, Fire Prevention for Welding and Cutting) and implement hot work programs including the use of a written hot work permit.

PART 3 - EXECUTION

3.1 EXAMINATION

A. Verify that utilities have been disconnected and capped before starting selective demolition operations.
B. Owner does not guarantee that existing conditions are same as those indicated in record documents.
C. Survey existing conditions and correlate with requirements indicated to determine extent of selective demolition required.
D. When unanticipated mechanical, electrical, or structural elements that conflict with intended function or design are encountered, investigate and measure the nature and extent of conflict. Promptly submit a written report to Architect-Engineer.
E. Perform an engineering survey of condition of building to determine whether removing any element might result in structural deficiency or unplanned collapse of any portion of structure or adjacent structures during selective building demolition operations.

1. Perform surveys as the Work progresses to detect hazards resulting from selective demolition activities.

F. Survey of Existing Conditions: Record existing conditions by use of preconstruction photographs or preconstruction videotapes.
   1. Inventory and record the condition of items to be removed and salvaged. Provide photographs or video of conditions that might be misconstrued as damage caused by salvage operations.

3.2 UTILITY SERVICES AND MECHANICAL/ELECTRICAL SYSTEMS

A. Existing Services/Systems to Be Removed, Relocated, or Abandoned: Locate, identify, disconnect, and seal or cap off indicated utility services and mechanical/electrical systems serving areas to be selectively demolished.
   1. Owner and/or Building manager will arrange to shut off indicated services/systems when requested by Contractor.
   2. Arrange to shut off indicated utilities with utility companies.
   3. If services/systems are required to be removed, relocated, or abandoned, provide temporary services/systems that bypass area of selective demolition and that maintain continuity of services/systems to other parts of building.
   4. Disconnect, demolish, and remove systems, equipment, and components indicated to be removed.
      a. Piping to Be Removed: Remove portion of piping indicated to be removed and cap or plug remaining piping with same or compatible piping material.
      b. Piping to Be Abandoned in Place: Drain piping and cap or plug piping with same or compatible piping material.
      c. Equipment to Be Removed: Disconnect and cap services and remove equipment.
      d. Equipment to Be Removed and Reinstalled: Disconnect and cap services and remove, clean, and store equipment; when appropriate, reinstall, reconnect, and make equipment operational.
      e. Equipment to Be Removed and Salvaged: Disconnect and cap services and

remove equipment and deliver to Owner.

3.3 PREPARATION

A. Site Access and Temporary Controls: Conduct selective demolition and debris-removal operations to ensure minimum interference with roads, streets, walks, walkways, and other adjacent occupied and used facilities.

B. Temporary Facilities: Provide temporary barricades and other protection required to prevent injury to people and damage to adjacent buildings and facilities to remain.

1. Provide protection to ensure safe passage of people around selective demolition area and to and from occupied portions of building.
2. Provide temporary weather protection, during interval between selective demolition of existing construction on exterior surfaces and new construction, to prevent water leakage and damage to structure and interior areas.
3. Protect walls, ceilings, floors, and other existing finish work that are to remain or that are exposed during selective demolition operations.
4. Cover and protect furniture, furnishings, and equipment that have not been removed.
5. Comply with all code and regulations for temporary enclosures and dust control.

6. Strengthen or add new supports when required during progress of selective demolition.

3.4 SELECTIVE DEMOLITION, GENERAL

A. General: Demolish and remove existing construction only to the extent required as indicated. Use methods required to complete the Work within limitations of governing regulations and as follows:

1. Proceed with selective demolition systematically, from higher to lower level. Complete selective demolition operations above each floor or tier before disturbing supporting members on the next lower level.
2. Neatly cut openings and holes plumb, square, and true to dimensions required. Use cutting methods least likely to damage construction to remain or adjoining construction. Use hand tools or small power tools designed for sawing or grinding, not hammering and chopping, to minimize disturbance of adjacent surfaces. Temporarily cover openings to remain.

3. Cut or drill from the exposed or finished side into concealed surfaces to avoid marring existing finished surfaces.
4. Do not use cutting torches until work area is cleared of flammable materials. At concealed spaces, such as duct and pipe interiors, verify condition and contents of hidden space before starting flame-cutting operations. Maintain fire watch and portable fire-suppression devices during flame-cutting operations.
5. Maintain adequate ventilation when using cutting torches.
6. Remove decayed, vermin-infested, or otherwise dangerous or unsuitable materials and promptly dispose of off-site.
7. Remove structural framing members and lower to ground by method suitable to avoid free fall and to prevent ground impact or dust generation.
8. Locate selective demolition equipment and remove debris and materials so as not to impose excessive loads on supporting walls, floors, or framing.
9. Dispose of demolished items and materials promptly. Comply with all codes and regulations.

B. Existing Items to Remain: Protect construction indicated to remain against damage and soiling during selective demolition. When permitted by Architect-Engineer, items may be removed to a suitable, protected storage location during selective demolition and cleaned and reinstalled in their original locations after selective demolition operations are complete.

3.5 SELECTIVE DEMOLITION PROCEDURES FOR SPECIFIC MATERIALS

A. Concrete: Demolish in small sections. Using power-driven saw, cut concrete to a depth of at least 3/4 inch at junctures with construction to remain. Dislodge concrete from reinforcement at perimeter of areas being demolished, cut reinforcement, and then remove remainder of concrete. Neatly trim openings to dimensions indicated.
B. Masonry: Demolish in small sections. Cut masonry at junctures with construction to remain, using power-driven saw, then remove masonry between saw cuts.
C. Windows, Doors and Frames: Remove as units, complete with trim and accessories. Repair edges of openings as required.

3.6 DISPOSAL OF DEMOLISHED MATERIALS

A. General: Except for items or materials indicated to be recycled, reused, salvaged, reinstalled, or otherwise indicated to remain Owner’s property, remove demolished

materials from Project site and legally dispose of them in an EPA-approved landfill.

1. Do not allow demolished materials to accumulate on-site.
2. Remove and transport debris in a manner that will prevent spillage on adjacent surfaces and areas.
3. Remove debris from elevated portions of building by chute, hoist, or other device that will convey debris to grade level in a controlled descent.
4. Comply with requirements specified in Section 01 74 19.

B. Burning: Do not burn demolished materials.

C. Disposal: Transport demolished materials off Owner's property and legally disposes of them.

3.7 CLEANING

A. Clean adjacent structures and improvements of dust, dirt, and debris caused by selective demolition operations.

B. Leave building in broom condition.

C. Return adjacent areas to condition existing before selective demolition operations began.

3.8 SCHEDULE OF SELECTIVE DEMOLITION

A. Coordinate with requirements for construction phasing as Contract Documents.

END OF SECTION

SECTION 03 01 00
MAINTENANCE OF CONCRETE

PART 1 - GENERAL

1.1 SECTION INCLUDES

A. Cleaning of existing concrete surface.

B. Supply and installation of non-metallic, high strength, cementitious repair and resurfacingmaterials for concrete substrates in structural and non-structural applications.

C. Supply and installation of a rapid hardening, High Early Strength, Low Shrinkage, Repair Mortar for Water Leaks on new construction and rehabilitation of existing structures.

D. Scope of Work as indicated on drawings, including:

1. Repair of deteriorated concrete.
2. Repair of internal concrete reinforcement.
3. Resurfacing of damaged or spalled concrete surfaces.

1.2 REFERENCES

A. ASTM C109 Standard Test Method for Compressive Strength of Hydraulic Cement Mortars

B. ASTM C157 Standard Test Method for Length Change of Harden Hydraulic-Cement Mortarand Concrete

C. ASTM C348 Standard Test Method for Flexural Strength of Hydraulic-Cement Mortars

D. ASTM C469 Standard Test Method for Static Modulus of Elasticity and Poisson’s Ratio ofConcrete in Compression

E. ASTM C496 Standard Test Method for Splitting Tensile Strength of Cylindrical ConcreteSpecimens

F. ASTM C672 Standard Test Method for Scaling Resistance of Concrete Surfaces Exposed toDeicing Chemicals

G. ASTM C882 Standard Test Method for Bond Strength of Epoxy-Resin Systems Used with Concrete by Slant Shear

H. ASTM C928 Standard Specification for Packaged, Dry, Rapid-Hardening CementitiousMaterials for Concrete Repairs

I. ACI 301 Specification for Structural Concrete

J. ACI 318 Building Code Requirements for Structural Concrete

K. ASTM C191 Test Method for Time of Setting of Hydraulic Cement by Vicat

Needle

1.3 SUBMITTALS

A. General: Submit samples and manufacturer's product data sheets, installation instructions, etc. in accordance with Division 01 General Requirements Submittal Section.

B. Test Data: Submit qualified testing data that confirms compliance with specified performance requirements.

C. Project Record Documents: Submit accurate records of locations of structural reinforcement repairs indicating type of repair and material(s) used.

1.4 QUALITY ASSURANCE

A. Qualifications:

1. Manufacturer:

a. At least five years and must have completed projects of the same general scope and complexity.

b. Manufacturer must have a local sales representative with experience in previous projects of the same general scope and complexity.

2. Applicator: Must be experienced and competent in installation of rapid hardening hydraulic cement materials and provide evidence of experience in work similar in size and scope to that required by this section

1.5 DELIVERY, STORAGE, AND HANDLING

A. Delivery: Deliver products in original, unopened, undamaged packaging with manufacturer's identification (i.e., brand logo, product name, weight of packaged unit, lot number).

B. Storage: Store products in a dry location, covered, out of direct sunlight, off the ground, and protected from moisture. Maintain storage temperature required by the manufacturer. Keep materials dry until used. Store bulk sand in a well-drained area on a clean, solid surface. Cover sand to prevent contamination.

C. Handling: Handle products in accordance with manufacturer's published recommendations.

1.6 SITE / ENVIRONMENTAL CONDITIONS

A. Temperature: Maintain ambient and surface temperatures between 45ºF (7ºC) to 90ºF (32ºC). Do not apply materials if ambient temperature falls below 45ºF (7ºC) within 24 hours of application. Protect from uneven and excessive evaporation during dry weather, windy conditions and strong blasts of dry air.

B. Inclement Weather: Do not apply repair or resurfacing materials during inclement weather unlessappropriate protection is employed.

C. Sunlight Exposure: Avoid, whenever possible, installation of repair or resurfacing materials in direct sunlight which could adversely affect aesthetics.

D. Substrate: Prior to installation, the substrates must be properly cleaned and prepared to receive repair or resurfacing materials, then inspected for proper preparation and any surface contamination or other conditions that may adversely affect the performance of the materials. Substrate must be free of residual moisture.

1.7 COORDINATION AND SCHEDULING

A. Coordinate installation of repair or resurfacing materials with all other trades to avoid impeding other construction.

B. Sufficient manpower must be provided to ensure continuous application and timely finishing.

PART 2 - PRODUCTS

2.1 MANUFACTURERS

A. Basis of Design: CTS Cement Manufacturing Corp or similar.

B. Components: Obtain repair or resurfacing materials, complementary admixtures and bonding agents from authorized distributors only.

2.2 MATERIALS

A. Fast Setting, Cementitious Repair Materials – General

1. High performance, polymer-modified cement blend with additives and specially graded fine aggregate and formulated to match the color of typical Portland Cement. Must allow self-curing which means wet curing is not required in most applications. Material shall be non-metallic and no chlorides added. Combine product with water to produce a high-quality repair material that is ideal where rapid strength gain, high durability, and low shrinkage are desired. Integral corrosion inhibitor already added to increase protection of embedded reinforcement. Product should achieve 2000 psi in 2 hours.

2. Additives and admixture materials must be approved for use by Architect / Engineer.

B. Rapid Hardening, High Early Strength, Low Shrinkage Repair Mortar for Water Leaks:

1. Fast setting, calcium sulfoaluminate hydraulic cement-basedproduct used to stop active water leaks. Combine product with water on site to create a fast setting,high strength mortar in 2 hours.

2. Water: Clean, potable water free of deleterious amounts of silt and dissolved salts.

2.3 MATERIAL PROPERTIES

A. Fast Setting, Cementitious Repair Materials – General

1. Product mix:

a. Compliance with: ASTM C928, ASTM C387

b. Minimum performance requirements:

Compressive Strength (ASTM C109)	2 Hours	2000 psi
	24 Hours	4000 psi
	28 Days	6500 psi

2.4 RELATED MATERIALS

A. Admixtures: Do not add additional dry materials such as cement, sand, additives or admixtures. Mix only with water. All additives and admixture materials must be approved by Architect / Engineer.

B. Curing: Prevent rapid water loss from materials as directed in the manufacturer's product data by use of:

1. Water Curing
2. Wet Burlap Method
3. Curing Compound compliant with ASTM C309.

PART 3A – CEMENTITIOUS CONCRETE REPAIR MIX EXECUTION

3.1 EXAMINATION

A. Verify project site conditions under provisions of Section 01 00 00.

B. Compliance: Comply with manufacturer's instructions for installation of repair and resurfacingmaterials.

C. Coordinate installation with adjacent work to ensure proper sequencing of construction.

D. Protect adjacent and surrounding surfaces not specified to receive materials with necessarymeans to ensure protection against overspray, water or other harmful debris.

E. Advise Contractor of discrepancies preventing proper installation of materials.

Do not proceedwith the work until unsatisfactory conditions are corrected.

3.2 CLEANING

A. Protect surrounding area by providing enclosures, barricades and other temporary construction as required to protect adjacent work from damage.

B. Clean concrete surfaces, cracks and voids of dirt or other contamination using the most appropriate method for proper preparation. Ensure methods are in compliance with material manufacturer's recommendations.

C. Do not use any of the following cleaning methods unless approved by the Architect / Engineer and the repair and resurfacing materials manufacturer:

1. Brushes with wire bristles, grinding with abrasives, solvents, hydrochloric or muriatic acid,sodium hydroxide, caustic soda, or lye.
2. Soap or detergent that is not non-ionic.
3. Water washing pressure over 100 psi.
4. Steam-cleaning or steam-generated hot-water washing.
5. Alkaline cleaning agents.
6. Acidic cleaning agents.
7. Abrasive blasting.

3.3 PREPARATION

A. Larger areas to be repaired may require slab shoring prior concrete repair works. Consult with Structural Engineer before proceeding.

B. Remove spalled and unsound concrete from application surface.

C. Concrete substrate must be free of materials such as paint, oil, curing compound, bond breaker or any material that will inhibit bonding. Mechanically remove loose, unsound, contaminated concrete.

D. If rusty reinforcing steel is present, it must be abrasively blasted to remove rust. Do not cut or damage reinforcing steel. If existing rebar after blasting have lost more than 25% of their diameter, rebars have to be cut and removed and a new rebar shall be spliced in. Inform Architect / Engineer.

E. Surrounding concrete on rebars to be repaired shall be removed in order for product mix cover adequately.

F. Thoroughly clean extraneous material such as dirt, loose chips, and dust from concrete surface.If compressed air is used, it shall be free of oil.

G. Concrete surface shall be saturated with potable water. Standing water shall be removed fromsurface to achieve a Saturated, Surface Dry (SSD) condition.

H. Minimum substrate temperature must be 45ºF (7ºC) and maximum substrate temperature 90ºF(32ºC).

3.4 MIXING

A. Organize installation personnel and equipment before mixing begins.

B. Comply with manufacturer's printed instructions.

C. Adjust water to achieve the desired consistency. Do not exceed manufacturer's recommendations.

D. Extend with aggregate as indicated on manufacturer's printed instructions.

E. All additives and admixture materials must be approved for use by Architect / Engineer.

F. Do not re-temper, add water, or remix after material stiffens. Material that stiffens before use must be discarded.

3.5 APPLICATION

A. Place mix product immediately after mixing.

B. Work the mixed repair mix firmly into all application surfaces to achieve good bond. Consolidate to remove air voids.

C. Do not wait for bleed water. Apply final finish as soon as material condition allows.

D. Repair Mix may be troweled, floated, shaved, or broom-finished.

E. On flat work, do not install in layers. Install full depth sections and progress horizontally.

F. Do not install on frozen surfaces. Repair Mix may be applied in temperatures ranging from 45°F to 90°F.

3.6 CURING

A. Repair Mix does not require water curing or curing compound under normal conditions at 70°F.

B. If used in excessively dry, windy, or hot conditions apply a fine water mist to repair Mix installations. Begin curing as soon as surface starts to lose its moist sheen. Keep exposed surfaces wet for a minimum of 1 hour if water curing is necessary

3.7 CLEAN-UP

A. Maintain a clean, orderly work area.

B. Clean excess material from surrounding areas immediately.

C. Protect adjacent surfaces that may be damaged, with drop cloths, waterproof paper or other means to maintain surfaces free of material splashes, water and

debris.

PART 3B – REPAIR MORTAR FOR WATER LEAKS EXECUTION

3.1 EXAMINATION

A. Verify project site conditions under provisions of Section 01 00 00.

B. Compliance: Comply with manufacturer's instructions for installation of materials.

C. Coordinate installation with adjacent work to ensure proper sequencing of construction.

3.2 PREPARATION

A. Follow guidelines provided in ACI 548.4, Section 3.1.1—Surface Preparation.

B. Enlarge small cracks and holes and completely remove all loose materials. Use a chisel or other suitable equipment to create square or undercut edges, avoid creating v-shape cuts.

C. Remove all loose, unsound, contaminated material to create a clean, sound surface free from anymaterials that may inhibit such as oil, dirt, paint, asphalt, sealing and curing compounds, acids, wax and loose dust and debris.

D. Minimum substrate temperature must be 45ºF (7ºC) and maximum substrate temperature 90ºF (32ºC).

3.3 MIXING

A. Mix Repair Mortar for Water Leaks Execution at a 3 parts Water Stop to 1 part clean potable water by volume, until aheavy putty consistency is achieved or as recommended by manufacturer.

B. Admixtures must be approved for use in writing by Architect / Engineer.

3.4 APPLICATION

A. Comply with manufacturer’s printed instructions and the following:

1. Verify that all substrates and ambient temperatures are between 45ºF (7ºC) to 90ºF (32ºC)and will remain within range until the repair mortar has reached final set.

2. Force Water Stop putty into repair area from the top portion of the crack and work down,applying pressure while doing so.

3. Apply constant pressure to putty for several minutes, or initial set is reached.

4. Remove excess material if needed by using a sawing motion to smooth out surface.

3.5 CURING

A. Not required.

3.6 CLEAN-UP

A. Clean excess material from surrounding areas and all tools immediately, before material reachesfinal set. If material has cured, remove using mechanical methods that will not damage the application or substrate.

B. Clean adjacent surfaces as needed using appropriate materials and methods to prevent damageto materials being cleaned. Remove and replace work that cannot be cleaned to the satisfaction of the Engineer or Owner.

END OF SECTION

SECTION 03 30 00
CAST-IN-PLACE CONCRETE

PART 1 - GENERAL

1.1 RELATED DOCUMENTS

A. Drawings and general provisions of the Contract, including General and Supplementary Conditions and Division 1 Specification Sections, apply to this Section.

1.2 SUMMARY

A. This Section specifies cast-in place concrete, including formwork, reinforcement, concrete materials, mix design, placement procedures, and finishes.

B. Related Sections include the following:

1. Division 2 Section "Cement Concrete Pavement" for concrete pavement and walks.

2. Division 3 Section "Concrete Toppings" for metallic and nonmetallic concrete floor toppings.

1.3 DEFINITIONS

A. Cementitious Materials: Portland cement alone or in combination with one or more of blended hydraulic cement, fly ash and other pozzolans, ground granulated blast-furnace slag, and silica fume.

1.4 SUBMITTALS

A. Product Data: For each type of manufactured material and product indicated.

B. Design Mixes: For each concrete mix. Include alternate mix designs when characteristics of materials, project conditions, weather, test results, or other circumstances warrant adjustments.

1. Indicate amounts of mix water to be withheld for later addition at Project site.

C. Steel Reinforcement Shop Drawings: Details of fabrication, bending, and placement, prepared according to ACI 315, "Details and Detailing of Concrete Reinforcement." Include material, grade, bar schedules, stirrup spacing, bent bar diagrams, arrangement, and supports of concrete reinforcement. Include special reinforcement required for openings through concrete structures.

D. Postensioning steel cables Shop Drawings: Details of fabrications and placement

E. Formwork Shop Drawings: Prepared by or under the supervision of a qualified professional engineer de- tailing fabrication, assembly, and support of formwork. Design and engineering of formwork are Contractor's responsibility.

1. Shoring and Reshoring: Indicate proposed schedule and sequence of stripping formwork, shoring removal, and installing and removing reshoring.

F. Welding Certificates: Copies of certificates for welding procedures and personnel.

G. Material Certificates: Signed by manufacturers certifying that each of the following items complies with requirements:

1. Cementitious materials and aggregates.

2. Form materials and form-release agents.

3. Steel reinforcement and reinforcement accessories.

4. Fiber reinforcement.

5. Admixtures.

6. Waterstops.

7. Curing materials.

8. Floor and slab treatments.

9. Bonding agents.

10. Adhesives.

11. Vapor retarders.

12. Epoxy joint filler.

13. Joint-filler strips.

14. Repair materials.

H. Minutes of preinstallation conference.

1.5 QUALITY ASSURANCE

A. Installer Qualifications: An experienced installer who has completed concrete Work similar in material, de- sign, and extent to that indicated for this Project and whose work has resulted in construction with a record of successful in-service performance.

B. Professional Engineer Qualifications: A professional engineer who is legally qualified to practice in juris- diction where Project is located and who is experienced in providing engineering services of the kind indicated. Engineering services are defined as those performed for formwork and shoring and reshoring installations that are similar to those indicated for this Project in material, design, and extent.

C. Manufacturer Qualifications: A firm experienced in manufacturing ready-mixed concrete products complying with ASTM C 94 requirements for production facilities

and equipment.

1. Manufacturer must be certified according to the National Ready Mixed Concrete Association's Certification of Ready Mixed Concrete Production Facilities.

D. Testing Agency Qualifications: An independent testing agency, acceptable to authorities having jurisdiction, qualified according to ASTM C 1077 and ASTM E 329 to conduct the testing indicated, as document- ed according to ASTM E 548.

1. Personnel conducting field tests shall be qualified as ACI Concrete Field Testing Technician, Grade 1, according to ACI CP-1 or an equivalent certification program.

E. Source Limitations: Obtain each type or class of cementitious material of the same brand from the same manufacturer's plant, each aggregate from one source, and each admixture from the same manufacturer.

F. Welding: Qualify procedures and personnel according to AWS D1.4, "Structural Welding Code-- Reinforcing Steel."

G. ACI Publications: Comply with the following, unless more stringent provisions are indicated:

1. ACI 301, "Specification for Structural Concrete."

2. ACI 117, "Specifications for Tolerances for Concrete Construction and Materials."

H. Preinstallation Conference: Conduct conference at Project site to comply with requirements in Division 1 Section "Project Meetings."

1. Before submitting design mixes, review concrete mix design and examine procedures for ensuring quality of concrete materials. Require representatives of each entity directly concerned with cast- in-place concrete to attend, including the following:

a. Contractor's superintendent.

b. Independent testing agency responsible for concrete design mixes.

c. Ready-mix concrete producer.

d. Concrete subcontractor.

1.6. DELIVERY, STORAGE, AND HANDLING

A. Deliver, store, and handle steel reinforcement to prevent bending and damage.

B. Avoid damaging coatings on steel reinforcement.

C. Repair damaged epoxy coatings on steel reinforcement according to ASTM D 3963/D

3963M.

PART 2 - PRODUCTS

2.1 FORM-FACING MATERIALS

A. Smooth-Formed Finished Concrete: Form-facing panels that will provide continuous, true, and smooth concrete surfaces. Furnish in largest practicable sizes to minimize number of joints.

1. Plywood, metal, or other approved panel materials.

2. Exterior-grade plywood panels, suitable for concrete forms, complying with DOC PS 1, and as follows:

a. Medium-density overlay, Class 1, or better, mill-release agent treated and edge sealed.

B. Rough-Formed Finished Concrete: Plywood, lumber, metal, or another approved material. Provide lumber dressed on at least two edges and one side for tight fit.

C. Forms for Cylindrical Columns, Pedestals, and Supports: Metal, glass-fiber-reinforced plastic, paper, or fiber tubes that will produce surfaces with gradual or abrupt irregularities not exceeding specified formwork surface class. Provide units with sufficient wall thickness to resist plastic concrete loads without detrimental deformation.

D. Pan-Type Forms: Glass-fiber-reinforced plastic or formed steel, stiffened to resist plastic concrete loads without detrimental deformation.

E. Void Forms: Biodegradable paper surface, treated for moisture resistance, structurally sufficient to support weight of plastic concrete and other superimposed loads.

F. Chamfer Strips: Wood, metal, PVC, or rubber strips, 3/4 by 3/4 inch (19 by 19 mm), minimum.

G. Form-Release Agent: Commercially formulated form-release agent that will not bond with, stain, or adversely affect concrete surfaces and will not impair subsequent treatments of concrete surfaces.

1. Formulate form-release agent with rust inhibitor for steel form-facing materials.

H. Form Ties: Factory-fabricated, removable or snap-off metal or glass-fiber-reinforced plastic form ties de- signed to resist lateral pressure of fresh concrete on forms and to prevent spalling of concrete on removal.

1. Furnish units that will leave no corrodible metal closer than 1 inch (25 mm) to the plane of the ex- posed concrete surface.

2. Furnish ties that, when removed, will leave holes not larger than 1 inch (25 mm) in diameter in concrete surface.

3. Furnish ties with integral water-barrier plates to walls indicated to receive dampproofing or waterproofing.

2.2 STEEL REINFORCEMENT

A. Reinforcing Bars: ASTM A 615/A 615M, Grade 60 (Grade 420), deformed from U.S. domestic manufacturer only.

B. Low-Alloy-Steel Reinforcing Bars: ASTM A 706/A 706M, deformed from U.S. domestic manufacturer only.

C. Epoxy-Coated Fabricated Reinforcing Bars: ASTM A 934/A 934M, and as follows:

1. Steel Reinforcement: ASTM A 615/A 615M, Grade 60 (Grade 420), deformed form U.S. domestic manufacturer only.

D. Steel Bar Mats: ASTM A 184/A 184M, assembled with clips.

1. Steel Reinforcement: ASTM A 615/A 615M, Grade 60 (Grade 420), deformed bars.

E. Plain-Steel Wire: ASTM A 82, as drawn.

F. Deformed-Steel Wire: ASTM A 496.

G. Epoxy-Coated Wire: ASTM A 884/A 884M, Class A coated, plain-steel wire.

H. Plain-Steel Welded Wire Fabric: ASTM A 185, fabricated from as-drawn steel wire into flat sheets.

I. Deformed-Steel Welded Wire Fabric: ASTM A 497, flat sheet.

J. Epoxy-Coated Welded Wire Fabric: ASTM A 884/A 884M, Class A, plain steel.

2.3 REINFORCEMENT ACCESSORIES

A. Bar Supports: Bolsters, chairs, spacers, and other devices for spacing, supporting, and fastening reinforcing bars and welded wire fabric in place. Manufacture bar supports according to CRSI's "Manual of Standard Practice" from steel wire, plastic, or precast concrete or fiber-reinforced concrete of greater com- pressive strength than concrete, and as follows:

1. For concrete surfaces exposed to view where legs of wire bar support contact forms, use CRSI Class 1 plastic-protected or CRSI Class 2 stainless-steel bar supports.

2. For epoxy-coated reinforcement, use epoxy-coated or other dielectric-polymer-coated wire bar supports.

B. Joint Dowel Bars: Plain-steel bars, ASTM A 615/A 615M, Grade 60 (Grade 420). Cut bars true to length with ends square and free of burrs.

C. Epoxy-Coated Joint Dowel Bars: ASTM A 775/A 775M; with ASTM A 615/A 615M, Grade 60 (Grade 420), plain-steel bars.

D. Epoxy Repair Coating: Liquid, two-part, epoxy repair coating; compatible with epoxy coating on reinforcement and complying with ASTM A 775/A 755M.

E. CONCRETE MATERIALS

Normal-Weight Aggregate: ASTM C 33, uniformly graded, and as follows:

1. Class: Moderate weathering region, but not less than 3M.

2. Nominal Maximum Aggregate Size: 1 inch (25 mm), or as indicated on drawings.

3. Combined Aggregate Gradation: Well graded from coarsest to finest with not more than 18 percent and not less than 8 percent retained on an individual sieve, except that less than 8 percent may be retained on coarsest sieve and on No. 50 (0.3-mm) sieve, and less than 8 percent may be retained on sieves finer than No. 50 (0.3 mm).

F. Lightweight Aggregate: ASTM C 330.

1. Nominal Maximum Aggregate Size: as indicated drawings.

G. Water: Potable and complying with ASTM C 94.

2.4 ADMIXTURES

A. General: Admixtures certified by manufacturer to contain no more than 0.1 percent water-soluble chloride ions by mass of cementitious material and to be compatible with other admixtures and cementitious mate- rials. Do not use admixtures containing calcium chloride.

B. Air-Entraining Admixture: ASTM C 260.

C. Water-Reducing Admixture: ASTM C 494, Type A.

D. High-Range, Water-Reducing Admixture: ASTM C 494, Type F.

E. Water-Reducing and Accelerating Admixture: ASTM C 494, Type E.

F. Water-Reducing and Retarding Admixture: ASTM C 494, Type D.

G. Corrosion-Inhibiting Admixture: When indicated use commercially formulated, anodic inhibitor or mixed cathodic and anodic inhibitor; capable of forming a protective barrier and minimizing chloride reactions with steel reinforcement in concrete.

1. Available Products: Subject to compliance with requirements, products that may be incorporated into the Work include, but are not limited to, the following:

a. DCI or DCI-S; W. R. Grace & Co., Construction Products Div.

b. Rheocrete 222+; Master Builders, Inc.

c. FerroGard-901; Sika Corporation.

2.5 FIBER REINFORCEMENT

A. Carbon-Steel Fiber: ASTM A 820, deformed, minimum 2.4 inches (60 mm) long, and of diameter or effec- tive diameter indicated.

1. Fiber: Type 1, cold-drawn wire, or Type 2, cut sheet.

B. Synthetic Fiber: Fibrillated or monofilament polypropylene fibers engineered and designed for use in con- crete, complying with ASTM C 1116, Type III, 1/2 to 1-1/2 inches (13 to 38 mm) long.

C. Available Products: Subject to compliance with requirements, products that may be incorporated into the Work include, but are not limited to, the following:

1. Carbon-Steel Fibers:

a. Dramix; Bekaert Corporation.

b. Fibercon; Fibercon International.

c. Zorex; Novocon International Inc.

2. Fibrillated Fibers:

a. Fibrasol F; Axim Concrete Technologies.

b. Fibermesh; Fibermesh, Div. of Synthetic Industries.

c. Forta; Forta Corporation.

d. Grace Fibers; W. R. Grace & Co., Construction Products Div.

3. Monofilament Fibers:

a. Fibrasol IIP; Axim Concrete Technologies.

b. Fiberstrand 100; Euclid Chemical Co.

c. Fibermix Stealth; Fibermesh, Div. of Synthetic Industries.

d. Forta Mono; Forta Corporation.

e. Grace MicroFiber; W. R. Grace & Co., Construction Products Div.

f. Hi-Tech PPM Fiber; Hi-Tech Fibers, Div. of Martin Color-Fi, Inc.

g. Polystrand 1000; Metalcrete Industries.

2.6 WATERSTOPS

A. Flexible Rubber Waterstops: CE CRD-C 513, for embedding in concrete to prevent passage of fluids through joints. Factory fabricate corners, intersections, and directional changes.

1. Profile: Ribbed with center bulb or as indicated.

B. Flexible PVC Waterstops: CE CRD-C 572, for embedding in concrete to prevent passage of fluids through joints. Factory fabricate corners, intersections, and directional changes.

1. Profile: Ribbed with center bulb or as indicated.

C. Available Manufacturers: Subject to compliance with requirements, manufacturers offering products that may be incorporated into the Work include, but are not limited to, the following:

1. Rubber Waterstops:

a. Greenstreak.

b. Progress Unlimited Inc.

c. Westec Barrier Technologies; Div. of Western Textile Products, Inc.

d. Williams Products, Inc.

2. PVC Waterstops:

a. Greenstreak.

b. Meadows: W. R. Meadows, Inc.

c. Murphy: Paul Murphy Plastics Co.

d. Progress Unlimited Inc.

e. Sternson Group.

f. Tamms Industries Co.; Div. of LaPorte Construction Chemicals North America, Inc.

g. Vinylex Corporation.

h. Westec Barrier Technologies; Div. of Western Textile Products, Inc.

D. Self-Expanding Strip Waterstops: Manufactured rectangular or trapezoidal strip, sodium bentonite or other hydrophylic material for adhesive bonding to concrete.

1. Available Products: Subject to compliance with requirements, products that may be incorporated into the Work include, but are not limited to, the following:

    a. Volclay Waterstop-RX; Colloid Environmental Technologies Co.

    b. Conseal CS-231; Concrete Sealants Inc.

    c. Swellseal Joint; De Neef Construction Chemicals (U.S.) Inc.

    d. Hydrotite; Greenstreak.

    e. Mirastop; Mirafi Moisture Protection, Div. of Royal Ten Cate (USA), Inc.

    f. Adeka Ultra Seal; Mitsubishi International Corporation.

    g. Superstop; Progress Unlimited Inc.

2.7 VAPOR RETARDERS

A. Vapor Retarder: ASTM E 1745, Class C, of one of the following materials; or polyethylene sheet, ASTM D 4397, not less than 10 mils (0.25 mm) thick:

1. Nonwoven, polyester-reinforced, polyethylene coated sheet; 10 mils (0.25 mm) thick.

2. Three-ply, nylon- or polyester-cord-reinforced, laminated, high-density polyethylene sheet; 7.8 mils (0.18 mm) thick.

3. Available Product: Subject to compliance with requirements, a product that may be incorporated into the Work includes, but is not limited to, "Griffolyn T-85" by Reef Industries Inc.

B. Fine-Graded Granular Material: When indicated on drawings use clean mixture of crushed stone, crushed gravel, and manufactured or natural sand; ASTM D 448, Size 10, with 100 percent passing a No. 4 (4.75- mm) sieve and 10 to 30 percent passing a No. 100 (0.15-mm) sieve; meeting deleterious substance limits of ASTM C 33 for fine aggregates.

C. Granular Fill: When indicated on drawings use clean mixture of crushed stone or crushed or uncrushed gravel; ASTM D 448, Size 57, with 100 percent passing a 1-1/2-inch (38-mm) sieve and 0 to 5 percent passing a No. 8 (2.36-mm) sieve.

2.8 FLOOR AND SLAB TREATMENTS

A. Slip-Resistive Aggregate Finish: Factory-graded, packaged, rustproof, nonglazing, abrasive aggregate of fused aluminum-oxide granules or crushed emery with emery aggregate containing not less than 50 per- cent aluminum oxide and not less than 25 percent ferric oxide; unaffected by freezing, moisture, and cleaning materials.

B. Unpigmented Mineral Dry-Shake Floor Hardener: Factory-packaged dry combination of Portland cement, graded quartz aggregate, and plasticizing

admixture.

C. Pigmented Mineral Dry-Shake Floor Hardener: Factory-packaged dry combination of Portland cement, graded quartz aggregate, coloring pigments, and plasticizing admixture. Use coloring pigments that are finely ground, nonfading mineral oxides interground with cement.

1. Colors: As indicated by referencing manufacturer's designations.

D. Penetrating Liquid Floor Treatment: Chemically reactive, waterborne solution of inorganic silicate or siliconate materials and proprietary components; odorless; colorless; that penetrates, hardens, and densifies concrete surfaces.

E. Available Products: Subject to compliance with requirements, products that may be incorporated into the Work include, but are not limited to, the following:

1. Unpigmented Mineral Dry-Shake Floor Hardener:

a. Non-Metallic Floor Hardener; Burke Group, LLC (The).

b. Concolor; ChemMasters.

c. Conshake 500; Conspec Marketing & Manufacturing Co., Inc.

d. Quartz Tuff; Dayton Superior Corporation.

e. Surflex; Euclid Chemical Co.

f. Tycron; Kaufman Products, Inc.

g. Colorhard; Lambert Corporation.

h. Quartzplate; L&M Construction Chemicals, Inc.

i. Maximent; Master Builders, Inc.

j. Floor Quartz; Metalcrete Industries.

k. Hard Top; Richmond Screw Anchor Co.

l. Lithochrome Color Hardener; L. M. Scofield Co.

m. Harcol; Sonneborn, Div. of ChemRex, Inc.

n. Durag Premium; Sternson Group.

o. Hard Top; Symons Corporation.

2. Pigmented Mineral Dry-Shake Floor Hardener:

a. Non-Metallic Floor Hardener; Burke Group, LLC (The).

b. Concolor; ChemMasters.

c. Conshake 600; Conspec Marketing & Manufacturing Co., Inc.

d. Quartz Tuff; Dayton Superior Corporation.

e. Surflex; Euclid Chemical Co.

f. Tycron; Kaufman Products, Inc.

g. Colorhard; Lambert Corporation.

h. Quartzplate; L&M Construction Chemicals, Inc.

i. Maximent; Master Builders, Inc.

j. Floor Quartz; Metalcrete Industries.

k. Lithochrome Color Hardener; L. M. Scofield Co.

l. Harcol; Sonneborn, Div. of ChemRex, Inc.

m. Colorplete; Sternson Group.

3. Penetrating Liquid Floor Treatment:

a. Titan Hard; Burke Group, LLC (The).

b. Chemisil Plus; ChemMasters.

c. Intraseal; Conspec Marketing & Manufacturing Co., Inc.

d. Ashford Formula; Curecrete Chemical Co., Inc.

e. Day-Chem Sure Hard; Dayton Superior Corporation.

f. Euco Diamond Hard; Euclid Chemical Co.

g. Seal Hard; L&M Construction Chemicals, Inc.

h. Vexcon Starseal PS; Vexcon Chemicals, Inc.

2.9 CURING MATERIALS

A. Evaporation Retarder: Waterborne, monomolecular film forming, manufactured for application to fresh concrete.

B. Absorptive Cover: AASHTO M 182, Class 2, burlap cloth made from jute or kenaf, weighing approximately 9 oz./sq. yd. (305 g/sq. m) dry.

C. Moisture-Retaining Cover: ASTM C 171, polyethylene film or white burlap-polyethylene sheet.

D. Water: Potable.

E. Clear, Waterborne, Membrane-Forming Curing Compound: ASTM C 309, Type 1, Class B.

F. Clear, Waterborne, Membrane-Forming Curing Compound: ASTM C 309, Type 1, Class B, 18 to 22 per- cent solids.

G. Available Products: Subject to compliance with requirements, products that may be incorporated into the Work include, but are not limited to, the following:

1. Evaporation Retarder:

a. Cimfilm; Axim Concrete Technologies.

b. Finishing Aid Concentrate; Burke Group, LLC (The).

c. Spray-Film; ChemMasters.

d. Aquafilm; Conspec Marketing & Manufacturing Co., Inc.

e. Sure Film; Dayton Superior Corporation.

f. Eucobar; Euclid Chemical Co.

g. Vapor Aid; Kaufman Products, Inc.

h. Lambco Skin; Lambert Corporation.

i. E-Con; L&M Construction Chemicals, Inc.

j. Confilm; Master Builders, Inc.

k. Waterhold; Metalcrete Industries.

l. Rich Film; Richmond Screw Anchor Co.

m. SikaFilm; Sika Corporation.

n. Finishing Aid; Symons Corporation.

o. Certi-Vex EnvioAssist; Vexcon Chemicals, Inc.

2. Clear, Solvent-Borne, Membrane-Forming Curing Compound:

a. AH Clear Cure; Anti-Hydro International, Inc.

b. Spartan-Cote; Burke Group, LLC (The).

c. Spray-Cure & Seal 15; ChemMasters.

d. Conspec #1-15 percent solids; Conspec Marketing & Manufacturing Co., Inc.

e. Day-Chem Cure and Seal; Dayton Superior Corporation.

f. Diamond Clear; Euclid Chemical Co.

g. Nitocure S; Fosroc.

h. Cure & Seal 309; Kaufman Products Inc.

i. Lambco 120; Lambert Corporation.

j. L&M Dress & Seal 18; L&M Construction Chemicals, Inc.

k. CS-309; W. R. Meadows, Inc.

l. Seal N Kure; Metalcrete Industries.

m. Rich Seal 14 percent UV; Richmond Screw Anchor Co.

n. Kure-N-Seal; Sonneborn, Div. of ChemRex, Inc.

o. Flortec 14; Sternson Group.

p. Cure & Seal 14 percent; Symons Corporation.

q. Clear Seal 150; Tamms Industries Co., Div. of LaPorte Construction Chemicals of North America, Inc.

r. Acrylic Cure; Unitex.

s. Certi-Vex AC 309; Vexcon Chemicals, Inc.

3. Clear, Waterborne, Membrane-Forming Curing Compound:

a. AH Clear Cure WB; Anti-Hydro International, Inc.

b. Klear Kote WB II Regular; Burke Chemicals.

c. Safe-Cure & Seal 20; ChemMasters.

d. High Seal; Conspec Marketing & Manufacturing Co., Inc.

e. Safe Cure and Seal; Dayton Superior Corporation.

f. Aqua Cure VOX; Euclid Chemical Co.

g. Cure & Seal 309 Emulsion; Kaufman Products Inc.

h. Glazecote Sealer-20; Lambert Corporation.

i. Dress & Seal WB; L&M Construction Chemicals, Inc.

j. Vocomp-20; W. R. Meadows, Inc.

k. Metcure; Metalcrete Industries.

l. Cure & Seal 150E; Nox-Crete Products Group, Kinsman Corporation.

m. Rich Seal 14 percent E; Richmond Screw Anchor Co.

n. Kure-N-Seal WB; Sonneborn, Div. of ChemRex, Inc.

o. Florseal W.B.; Sternson Group.

p. Cure & Seal 14 percent E; Symons Corporation.

q. Seal Cure WB 150; Tamms Industries Co., Div. of LaPorte Construction Chemicals of North America, Inc.

r. Hydro Seal; Unitex.

s. Starseal 309; Vexcon Chemicals, Inc.

4. Clear, Waterborne, Membrane-Forming Curing Compound, 18 to 22 Percent Solids:

a. Klear Kote WB II 20 percent; Burke Chemicals.

b. Safe-Cure & Seal 20; ChemMasters.

c. Conspec 21; Conspec Marketing & Manufacturing Co., Inc.

d. Diamond Clear VOX; Euclid Chemical Co.

e. SureCure Emulsion; Kaufman Products Inc.

f. Glazecote Sealer-20; Lambert Corporation.

g. Dress & Seal WB; L&M Construction Chemicals, Inc.

h. Vocomp-20; W. R. Meadows, Inc.

i. Metcure 0800; Metalcrete Industries.

j. Cure & Seal 200E; Nox-Crete Products Group, Kinsman Corporation.

k. Rich Seal 18 percent E; Richmond Screw Anchor Co.

l. Kure-N-Seal W; Sonneborn, Div. of ChemRex, Inc.

m. Florseal W.B.; Sternson Group.

n. Cure & Seal 18 percent E; Symons Corporation.

o. Seal Cure WB STD; Tamms Industries Co., Div. of LaPorte Construction Chemicals of North America, Inc.

p. Hydro Seal 800; Unitex.

q. Starseal 0800; Vexcon Chemicals, Inc.

2.10 RELATED MATERIALS

A. Joint-Filler Strips: ASTM D 1751, asphalt-saturated cellulosic fiber, or ASTM D 1752, cork or self- expanding cork.

B. Epoxy Joint Filler: Two-component, semirigid, 100 percent solids, epoxy resin with a Shore A hardness of 80 per ASTM D 2240.

C. Bonding Agent: ASTM C 1059, Type II, non-redispersible, acrylic emulsion or styrene butadiene.

D. Epoxy-Bonding Adhesive: ASTM C 881, two-component epoxy resin, capable of humid curing and bonding to damp surfaces, of class and grade to suit requirements, and as follows:

1. Types IV and V, load bearing, for bonding hardened or freshly mixed concrete to hardened concrete.

E. Reglets: Fabricate reglets of not less than 0.0217-inch- (0.55-mm-) thick galvanized steel sheet. Temporarily fill or cover face opening of reglet to prevent intrusion of concrete or debris.

F. Dovetail Anchor Slots: Hot-dip galvanized steel sheet, not less than 0.0336 inch (0.85 mm) thick, with bent tab anchors. Temporarily fill or cover face opening of slots to prevent intrusion of concrete or debris.

2.11 REPAIR MATERIALS

A. Repair Underlayment: Cement-based, polymer-modified, self-leveling product that can be applied in thick- nesses from 1/8 inch (3.2 mm) and that can be feathered at edges to match adjacent floor elevations.

1. Cement Binder: ASTM C 150, Portland cement or hydraulic or blended hydraulic cement as de- fined in ASTM C 219.

2. Primer: Product of underlayment manufacturer recommended for substrate, conditions, and application.

3. Aggregate: Well-graded, washed gravel, 1/8 to 1/4 inch (3 to 6 mm) or coarse sand as recommended by underlayment manufacturer.

4. Compressive Strength: Not less than 4100 psi (29 MPa) at 28 days when tested according to ASTM C 109/C 109M.

B. Repair Topping: Traffic-bearing, cement-based, polymer-modified, self-leveling product that can be ap- plied in thicknesses from 1/4 inch (6 mm).

1. Cement Binder: ASTM C 150, Portland cement or hydraulic or blended hydraulic cement as de- fined in ASTM C 219.

2. Primer: Product of topping manufacturer recommended for substrate, conditions, and application.

3. Aggregate: Well-graded, washed gravel, 1/8 to 1/4 inch (3 to 6 mm) or coarse sand as recommended by topping manufacturer.

4. Compressive Strength: Not less than 5700 psi (39 MPa) at 28 days when tested according to ASTM C 109/C 109M.

2.12 CONCRETE MIXES

A. Prepare design mixes for each type and strength of concrete determined by either laboratory trial mix or field test data bases, as follows:

1. Proportion normal-weight concrete according to ACI 211.1 and ACI 301.

2. Proportion lightweight structural concrete according to ACI 211.2 and ACI 301.

B. Footings and Foundation Walls: Proportion normal-weight concrete mix as follows:

1. Compressive Strength (28 Days): 4500 psi (20.7 MPa).

2. Maximum Slump for Concrete Containing High-Range Water-Reducing Admixture: 8 inches (200 mm) after admixture is added to concrete with 2- to 4-inch (50- to 100-mm) slump.

3. Maximum water/cement ratio shall not exceed 0.50.

C. Slab-on-Grade: Proportion normal-weight concrete mix as follows:

1. Compressive Strength (28 Days): 4500 psi (20.7 MPa).

2. Minimum Cementitious Materials Content: 520 lb/cu. yd. (309 kg/cu. m).

3. Maximum Slump: 4 inches (100 mm).

4. Maximum water/cement ratio shall not exceed 0.50.

D. Suspended Slabs: Proportion normal-weight concrete mix as follows:

1. Compressive Strength (28 Days): 4500 psi (27.6 MPa).

2. Maximum Slump: 4 inches (100 mm).

3. Maximum water/cement ratio shall no exceed 0.45.

E. Building Frame Members: Proportion normal-weight concrete mix as follows:

1. Compressive Strength (28 Days): As indicated on drawings, but not less than 4000 psi (27.6 MPa).

2. Maximum Slump: 4 inches (100 mm).

3. Maximum Slump for Concrete Containing High-Range Water-Reducing Admixture: 8 inches (200 mm) after admixture is added to concrete with 2- to 4-inch (50- to 100-mm) slump.

4. Maximum water/cement ratio shall no exceed 0.48.

F. Cementitious Materials: With a previous approval of the Structural Engineer, Limit percentage, by weight, of cementitious materials other than Portland cement in concrete as follows:

1. Fly Ash: 25 percent.

2. Combined Fly Ash and Pozzolan: 25 percent.

3. Ground Granulated Blast-Furnace Slag: 50 percent.

4. Combined Fly Ash or Pozzolan and Ground Granulated Blast-Furnace Slag: 50 percent Portland cement minimum, with fly ash or pozzolan not exceeding 25 percent.

5. Silica Fume: 10 percent.

6. Combined Fly Ash, Pozzolans, and Silica Fume: 35 percent with fly ash or pozzolans not exceeding 25 percent and silica fume not exceeding 10 percent.

7. Combined Fly Ash or Pozzolans, Ground Granulated Blast-Furnace Slag, and Silica Fume: 50 percent Portland cement minimum, with fly ash or pozzolans not exceeding 25 percent and silica fume not exceeding 10 percent.

G. Maximum Water-Cementitious Materials Ratio: Shall be as indicated on drawings and on articles

2.13,C,D,E & F of these specifications, but under any circumstances shall be more than 0.55.

H. Air Content: Add air-entraining admixture at manufacturer's prescribed rate to result in concrete at point of placement having an air content as follows within a tolerance of plus 1 or minus 1.5 percent, unless other- wise indicated:

1. Air Content: 4 percent for 1-1/2-inch- (38-mm-) nominal maximum aggregate size.

2. Air Content: 4.5 percent for 1-inch- (25-mm-) nominal maximum aggregate size.

3. Air Content: 4.5 percent for 3/4-inch- (19-mm-) nominal maximum aggregate size.

I. Do not air entrain concrete to trowel-finished interior floors and suspended slabs. Do not allow entrapped air content to exceed 3 percent.

J. Limit water-soluble, chloride-ion content in hardened concrete to 0.15 percent by weight of cement.

K. Steel-Fiber Reinforcement: When individual add to concrete mix, according to manufacturer's written instructions, at a rate of 50 lb/cu. yd. (29.7 kg/cu. m).

L. Synthetic Fiber: When individual uniformly disperse in concrete mix at manufacturer's recommended rate, but not less than 1.5 lb/cu. yd. (0.90 kg/cu. m).

M. Admixtures: Use admixtures according to manufacturer's written instructions.

1. Use water-reducing admixture or high-range water-reducing admixture (superplasticizer) in concrete, as required, for placement and workability.

2. Use water-reducing and retarding admixture when required by high temperatures, low humidity, or other adverse placement conditions.

3. Use water-reducing admixture in pumped concrete, concrete for heavy-use industrial slabs and parking structure slabs, concrete required to be watertight, and concrete with a water-cementitious materials ratio below 0.50.

4. Use corrosion-inhibiting admixture in concrete mixes where indicated.

2.13 FABRICATING REINFORCEMENT

A. Fabricate steel reinforcement according to CRSI's "Manual of Standard Practice."

2.14 CONCRETE MIXING

A. Ready-Mixed Concrete: Measure, batch, mix, and deliver concrete according to ASTM C 94 and ASTM C 1116, and furnish batch ticket information.

1. When air temperature is between 85 and 90 deg F (30 and 32 deg C), reduce mixing and delivery time from 1-1/2 hours to 75 minutes; when air temperature is above 90 deg F (32 deg C), reduce mixing and delivery time to 60 minutes.

PART 3 - EXECUTION

3.1 FORMWORK

A. Design, erect, shore, brace, and maintain formwork, according to ACI 301, to support vertical, lateral, static, and dynamic loads, and construction loads that might be applied, until concrete structure can support such loads.

B. Construct formwork so concrete members and structures are of size, shape, alignment, elevation, and position indicated, within tolerance limits of ACI 117.

C. Limit concrete surface irregularities, designated by ACI 347R as abrupt or gradual, as follows:

1. Class A, 1/8 inch (3 mm).

D. Construct forms tight enough to prevent loss of concrete mortar.

E. Fabricate forms for easy removal without hammering or prying against concrete surfaces. Provide crush or wrecking plates where stripping may damage cast concrete surfaces. Provide top forms for inclined surfaces steeper than 1.5 horizontal to 1 vertical. Kerf wood inserts for forming keyways, reglets, recess- es, and the like, for easy removal.

1. Do not use rust-stained steel form-facing material.

F. Set edge forms, bulkheads, and intermediate screed strips for slabs to achieve required elevations and slopes in finished concrete surfaces. Provide and secure units to support screed strips; use strike-off templates or compacting-type screeds.

G. Provide temporary openings for cleanouts and inspection ports where interior area of formwork is inaccessible. Close openings with panels tightly fitted to forms and securely braced to prevent loss of concrete mortar. Locate temporary openings in forms at inconspicuous locations.

H. Chamfer exterior corners and edges of permanently exposed concrete.

I. Form openings, chases, offsets, sinkages, keyways, reglets, blocking, screeds, and bulkheads required in the Work. Determine sizes and locations from trades providing such items.

J. Clean forms and adjacent surfaces to receive concrete. Remove chips, wood, sawdust, dirt, and other de- bris just before placing concrete.

K. Retighten forms and bracing before placing concrete, as required, to prevent mortar leaks and maintain proper alignment.

L. Coat contact surfaces of forms with form-release agent, according to manufacturer's written instructions, before placing reinforcement.

3.2 EMBEDDED ITEMS

A. Place and secure anchorage devices and other embedded items required for adjoining work that is attached to or supported by cast-in-place concrete. Use

Setting Drawings, templates, diagrams, instructions, and directions furnished with items to be embedded.

1. Install anchor bolts, accurately located, to elevations required.

2. Install reglets to receive top edge of foundation sheet waterproofing and to receive through-wall flashings in outer face of concrete frame at exterior walls, where flashing is shown at lintels, shelf angles, and other conditions.

3. Install dovetail anchor slots in concrete structures as indicated.

3.3 REMOVING AND REUSING FORMS

A. General: Formwork, for sides of beams, walls, columns, and similar parts of the Work, that does not sup- port weight of concrete may be removed after cumulatively curing at not less than 50 deg F (10 deg C) for 24 hours after placing concrete provided concrete is hard enough to not be damaged by form-removal operations and provided curing and protection operations are maintained.

B. Leave formwork, for beam soffits, joists, slabs, and other structural elements, that supports weight of concrete in place until concrete has achieved the following:

1. At least 70 percent of 28-day design compressive strength.

2. Determine compressive strength of in-place concrete by testing representative field- or laboratory- cured test specimens according to ACI 301.

3. Remove forms only if shores have been arranged to permit removal of forms without loosening or disturbing shores.

C. Clean and repair surfaces of forms to be reused in the Work. Split, frayed, delaminated, or otherwise damaged form-facing material will not be acceptable for exposed surfaces. Apply new form-release agent.

D. When forms are reused, clean surfaces, remove fins and laitance, and tighten to close joints. Align and secure joints to avoid offsets. Do not use patched forms for exposed concrete surfaces unless approved by Architect.

3.4 SHORES AND RESHORES

A. Comply with ACI 318 (ACI 318M), ACI 301, and recommendations in ACI 347R for design, installation, and removal of shoring and reshoring.

B. In multistory construction, extend shoring or reshoring over a sufficient number of stories to distribute loads in such a manner that no floor or member will be excessively loaded or will induce tensile stress in concrete members without sufficient steel reinforcement.

C. Plan sequence of removal of shores and reshore to avoid damage to concrete. Locate and provide adequate reshoring to support construction without excessive stress or deflection.

3.5 VAPOR RETARDERS

A. Vapor Retarder: Place, protect, and repair vapor-retarder sheets according to ASTM E 1643 and manufacturer's written instructions.

B. Fine-Graded Granular Material: Cover vapor retarder with fine-graded granular material, moisten, and compact with mechanical equipment to elevation tolerances of plus 0 inch (0 mm) or minus 3/4 inch (19 mm).

C. Granular Fill: Cover vapor retarder with granular fill, moisten, and compact with mechanical equipment to elevation tolerances of plus 0 inch (0 mm) or minus 3/4 inch (19 mm).

1. Place and compact a 1/2-inch- (13-mm-) thick layer of fine-graded granular material over granular fill.

3.6 STEEL REINFORCEMENT

A. General: Comply with CRSI's "Manual of Standard Practice" for placing reinforcement.

1. Do not cut or puncture vapor retarder. Repair damage and reseal vapor retarder before placing concrete.

B. Clean reinforcement of loose rust and mill scale, earth, ice, and other foreign materials.

C. Accurately position, support, and secure reinforcement against displacement. Locate and support reinforcement with bar supports to maintain minimum concrete cover. Do not tack weld crossing reinforcing bars.

1. Shop- or field-weld reinforcement according to AWS D1.4, where indicated.

D. Set wire ties with ends directed into concrete, not toward exposed concrete surfaces.

E. Install welded wire fabric in longest practicable lengths on bar supports spaced to minimize sagging. Lap edges and ends of adjoining sheets at least one mesh spacing. Offset laps of adjoining sheet widths to prevent continuous laps in either direction. Lace overlaps with wire.

F. Epoxy-Coated Reinforcement: Use epoxy-coated steel wire ties to fasten epoxy-coated reinforcement. Repair cut and damaged epoxy coatings with epoxy repair coating according to ASTM D 3963/D 3963M.

3.7 JOINTS

A. General: Construct joints true to line with faces perpendicular to surface plane of concrete.

B. Construction Joints: Install so strength and appearance of concrete are not

impaired, at locations indicated or as approved by Architect.

1. Place joints perpendicular to main reinforcement. Do not Continue reinforcement across construction joints, unless otherwise indicated. Do not continue reinforcement through sides of strip placements of floors and slabs.

2. Form from preformed galvanized steel, plastic keyway-section forms, or bulkhead forms with keys, unless otherwise indicated. Embed keys at least 1-1/2 inches (38 mm) into concrete.

3. When not indicated on drawings locate joints for beams, slabs, joists, and girders in the middle third of spans. Offset joints in girders a minimum distance of twice the beam width from a beam-girder intersection.

4. When not indicated on drawings locate horizontal joints in walls and columns at underside of floors, slabs, beams, and girders and at the top of footings or floor slabs.

5. Space vertical joints in walls as indicated. Locate joints beside piers integral with walls, near corners, and in concealed locations where possible.

6. Use a bonding agent at locations where fresh concrete is placed against hardened or partially hardened concrete surfaces.

C. Contraction Joints in Slabs-on-Grade: Form weakened-plane contraction joints, sectioning concrete into areas as indicated. Construct contraction joints for a depth equal to at least one-third of concrete thick- ness, as follows:

1. Grooved Joints: Form contraction joints after initial floating by grooving and finishing each edge of joint to a radius of 1/8 inch (3 mm). Repeat grooving of contraction joints after applying surface finishes. Eliminate groover tool marks on concrete surfaces.

2. Sawed Joints: Form contraction joints with power saws equipped with shatterproof abrasive or diamond-rimmed blades. Cut 1/8-inch- (3-mm-) wide joints into concrete when cutting action will not tear, abrade, or otherwise damage surface and before concrete develops random contraction cracks.

D. Isolation Joints in Slabs-on-Grade: After removing formwork, install joint-filler strips at slab junctions with vertical surfaces, such as column pedestals, foundation walls, grade beams, and other locations, as indicated.

1. Extend joint-filler strips full width and depth of joint, terminating flush with finished concrete surface, unless otherwise indicated.

2. Terminate full-width joint-filler strips not less than 1/2 inch (12 mm) or more than 1 inch (25 mm) below finished concrete surface where joint sealants, specified in Division 7 Section "Joint Seal- ants," are indicated.

3. Install joint-filler strips in lengths as long as practicable. Where more than one length is required, lace or clip sections together.

E. Dowel Joints: Install dowel sleeves and dowels or dowel bar and support assemblies at joints where indicated.

1. Use dowel sleeves or lubricate or asphalt-coat one-half of dowel length to prevent concrete bonding to one side of joint.

3.8 WATERSTOPS

A. Flexible Waterstops: Install in construction joints as indicated to form a continuous diaphragm. Install in longest lengths practicable. Support and protect exposed waterstops during progress of Work. Field- fabricate joints in waterstops according to manufacturer's written instructions.

B. Self-Expanding Strip Waterstops: Install in construction joints and at other locations indicated, according to manufacturer's written instructions, bonding or mechanically fastening and firmly pressing into place. Install in longest lengths practicable.

3.9 CONCRETE PLACEMENT

A. Before placing concrete, verify that installation of formwork, reinforcement, and embedded items is complete and that required inspections have been performed.

B. Do not add water to concrete during delivery, at Project site, or during placement, unless approved by Architect.

1. Do not add water to concrete after adding high-range water-reducing admixtures to mix.

C. Deposit concrete continuously or in layers of such thickness that no new concrete will be placed on concrete that has hardened enough to cause seams or planes of weakness. If a section cannot be placed continuously, provide construction joints as specified. Deposit concrete to avoid segregation.

D. Deposit concrete in forms in horizontal layers no deeper than 24 inches (600 mm) and in a manner to avoid inclined construction joints. Place each layer while preceding layer is still plastic, to avoid cold joints.

1. Consolidate placed concrete with mechanical vibrating equipment. Use equipment and procedures for consolidating concrete recommended by ACI 309R.

2. Do not use vibrators to transport concrete inside forms. Insert and withdraw vibrators vertically at uniformly spaced locations no farther than the visible effectiveness of the vibrator. Place vibrators to rapidly penetrate placed layer and at least 6 inches (150 mm) into preceding layer. Do not insert vibrators into lower layers of concrete that have begun to lose plasticity. At each insertion, limit du- ration of vibration to time necessary to consolidate concrete and complete embedment of reinforcement and other embedded items without causing mix constituents to segregate.

E. Deposit and consolidate concrete for floors and slabs in a continuous operation,

within limits of construction joints, until placement of a panel or section is complete.

1. Consolidate concrete during placement operations so concrete is thoroughly worked around reinforcement and other embedded items and into corners.

2. Maintain reinforcement in position on chairs during concrete placement.

3. Screed slab surfaces with a straightedge and strike off to correct elevations.

4. Slope surfaces uniformly to drains where required.

5. Begin initial floating using bull floats or darbies to form a uniform and open-textured surface plane, free of humps or hollows, before excess moisture or bleedwater appears on the surface. Do not further disturb slab surfaces before starting finishing operations.

F. Hot-Weather Placement: Place concrete according to recommendations in ACI 305R and as follows, when hot-weather conditions exist:

1. Cool ingredients before mixing to maintain concrete temperature below 90 deg F (32 deg C) at time of placement. Chilled mixing water or chopped ice may be used to control temperature, provided water equivalent of ice is calculated to total amount of mixing water. Using liquid nitrogen to cool concrete is Contractor's option.

2. Cover steel reinforcement with water-soaked burlap so steel temperature will not exceed ambient air temperature immediately before embedding in concrete.

3. Fog-spray forms, steel reinforcement, and subgrade just before placing concrete. Keep subgrade moisture uniform without standing water, soft spots, or dry areas.

3.10 FINISHING FORMED SURFACES

A. Rough-Formed Finish: As-cast concrete texture imparted by form-facing material with tie holes and defective areas repaired and patched. Remove fins and other projections exceeding ACI 347R limits for class of surface specified.

B. Smooth-Formed Finish: As-cast concrete texture imparted by form-facing material, arranged in an orderly and symmetrical manner with a minimum of seams. Repair and patch tie holes and defective areas. Re- move fins and other projections exceeding 1/8 inch (3 mm) in height.

1. Apply to concrete surfaces exposed to public view or to be covered with a coating or covering material applied directly to concrete, such as waterproofing, dampproofing, veneer plaster, or painting.

2. Do not apply rubbed finish to smooth-formed finish.

C. Related Unformed Surfaces: At tops of walls, horizontal offsets, and similar

unformed surfaces adjacent to formed surfaces, strike off smooth and finish with a texture matching adjacent formed surfaces. Continue final surface treatment of formed surfaces uniformly across adjacent unformed surfaces, unless otherwise indicated.

3.11 FINISHING FLOORS AND SLABS

A. General: Comply with recommendations in ACI 302.1R for screeding, restraightening, and finishing operations for concrete surfaces. Do not wet concrete surfaces.

B. Scratch Finish: While still plastic, texture concrete surface that has been screeded and bull-floated or darbied. Use stiff brushes, brooms, or rakes.

1. Apply scratch finish to surfaces indicated and to surfaces to receive concrete floor topping or mor- tar setting beds for ceramic or quarry tile, Portland cement terrazzo, and other bonded cementitious floor finishes.

C. Float Finish: Consolidate surface with power-driven floats or by hand floating if area is small or inaccessible to power driven floats. Restraighten, cut down high spots, and fill low spots. Repeat float passes and restraightening until surface is left with a uniform, smooth, granular texture.

1. Apply float finish to surfaces indicated, to surfaces to receive trowel finish, and to floor and slab sur- faces to be covered with fluid-applied or sheet waterproofing, built-up or membrane roofing, or sand-bed terrazzo.

D. Trowel Finish: After applying float finish, apply first trowel finish and consolidate concrete by hand or pow- er-driven trowel. Continue troweling passes and restraighten until surface is free of trowel marks and uniform in texture and appearance. Grind smooth any surface defects that would telegraph through applied coatings or floor coverings.

1. Apply a trowel finish to surfaces indicated and to floor and slab surfaces exposed to view or to be covered with resilient flooring, carpet, ceramic or quarry tile set over a cleavage membrane, paint, or another thin film-finish coating system.

2. Finish surfaces to the following tolerances, measured within 24 hours according to ASTM E 1155/E 1155M for a randomly trafficked floor surface:

E. Trowel and Fine-Broom Finish: Apply a partial trowel finish, stopping after second troweling, to surfaces indicated and to surfaces where ceramic or quarry tile is to be installed by either thickset or thin-set meth- od. Immediately after second troweling, and when concrete is still plastic, slightly scarify surface with a fi- ne broom.

F. Broom Finish: Apply a broom finish to exterior concrete platforms, steps, and ramps, and elsewhere as indicated.

1. Immediately after float finishing, slightly roughen trafficked surface by brooming with fiber-bristle broom perpendicular to main traffic route.

Coordinate required final finish with Architect before ap- plication.

G. Slip-Resistive Aggregate Finish: Before final floating, apply slip-resistive aggregate finish where indicated and to concrete stair treads, platforms, and ramps. Apply according to manufacturer's written instructions and as follows:

1. Uniformly spread 25 lb/100 sq. ft. (12 kg/10 sq. m) of dampened slip-resistive aggregate over sur- face in one or two applications. Tamp aggregate flush with surface, but do not force below surface.

2. After broadcasting and tamping, apply float finish.

3. After curing, lightly work surface with a steel wire brush or an abrasive stone, and water to expose slip-resistive aggregate.

H. Mineral Dry-Shake Floor Hardener Finish: After initial floating, apply mineral dry-shake materials to sur- faces according to manufacturer's written instructions and as follows:

1. Uniformly apply mineral dry-shake materials at a rate of 100 lb/100 sq. ft. (49 kg/10 sq. m), unless greater amount is recommended by manufacturer.

2. Uniformly distribute approximately two-thirds of mineral dry-shake materials over surface by hand or with mechanical spreader, and embed by power floating. Follow power floating with a second mineral dry-shake application, uniformly distributing remainder of material, and embed by power floating.

3. After final floating, apply a trowel finish. Cure concrete with curing compound recommended by dry-shake material manufacturer and apply immediately after final finishing.

3.12 MISCELLANEOUS CONCRETE ITEMS

A. Filling In: Fill in holes and openings left in concrete structures, unless otherwise indicated, after work of other trades is in place. Mix, place, and cure concrete, as specified, to blend with in-place construction. Provide other miscellaneous concrete filling indicated or required to complete Work.

B. Curbs: Provide monolithic finish to interior curbs by stripping forms while concrete is still green and by steel-troweling surfaces to a hard, dense finish with corners, intersections, and terminations slightly round- ed.

C. Equipment Bases and Foundations: Provide machine and equipment bases and foundations as shown on Drawings. Set anchor bolts for machines and equipment at correct elevations, complying with diagrams or templates of manufacturer furnishing machines and equipment.

D. Steel Pan Stairs: Provide concrete fill for steel pan stair treads, landings, and associated items. Cast-in inserts and accessories as shown on Drawings. Screed, tamp, and trowel-finish concrete surfaces.

3.13 CONCRETE PROTECTION AND CURING

A. General: Protect freshly placed concrete from premature drying and excessive cold or hot temperatures. Comply with ACI 306.1 for cold-weather protection and with recommendations in ACI 305R for hot-weather protection during curing.

B. Evaporation Retarder: Apply evaporation retarder to unformed concrete surfaces if hot, dry, or windy conditions cause moisture loss approaching 0.2 lb/sq. ft. x h (1 kg/sq. m x h) before and during finishing operations. Apply according to manufacturer's written instructions after placing, screeding, and bull floating or darbying concrete, but before float finishing.

C. Formed Surfaces: Cure formed concrete surfaces, including underside of beams, supported slabs, and other similar surfaces. If forms remain during curing period, moist cure after loosening forms. If removing forms before end of curing period, continue curing by one or a combination of the following methods:

D. Unformed Surfaces: Begin curing immediately after finishing concrete. Cure unformed surfaces, including floors and slabs, concrete floor toppings, and other surfaces, by one or a combination of the following methods:

1. Moisture Curing: Keep surfaces continuously moist for not less than seven days with the following materials:

    a. Water.

    b. Continuous water-fog spray.

    c. Absorptive cover, water saturated, and kept continuously wet. Cover concrete surfaces and edges with 12-inch (300-mm) lap over adjacent absorptive covers.

2. Moisture-Retaining-Cover Curing: Cover concrete surfaces with moisture-retaining cover for curing concrete, placed in widest practicable width, with sides and ends lapped at least 12 inches (300 mm), and sealed by waterproof tape or adhesive. Cure for not less than seven days. Immediately repair any holes or tears during curing period using cover material and waterproof tape.

    a. Moisture cure or use moisture-retaining covers to cure concrete surfaces to receive floor coverings.

    b. Moisture cure or use moisture-retaining covers to cure concrete surfaces to receive penetrating liquid floor treatments.

    c. Cure concrete surfaces to receive floor coverings with either a moisture-retaining cover or a curing compound that the manufacturer recommends for use with floor coverings.

3. Curing Compound: Apply uniformly in continuous operation by power spray or roller according to manufacturer's written instructions. Recoat areas subjected to heavy rainfall within three hours after initial application. Maintain continuity

of coating and repair damage during curing period.

3.14 LIQUID FLOOR TREATMENTS

A. Penetrating Liquid Floor Treatment: Prepare, apply, and finish penetrating liquid floor treatment according to manufacturer's written instructions.

1. Remove curing compounds, sealers, oil, dirt, laitance, and other contaminants and complete sur- face repairs.

2. Do not apply to concrete that is less than seven days old.

3. Apply liquid until surface is saturated, scrubbing into surface until a gel forms; rewet; and repeat brooming or scrubbing. Rinse with water; remove excess material until surface is dry. Apply a second coat in a similar manner if surface is rough or porous.

B. Sealing Coat: Uniformly apply a continuous sealing coat of curing and sealing compound to hardened concrete by power spray or roller according to manufacturer's written instructions.

3.15 JOINT FILLING

A. Prepare, clean, and install joint filler according to manufacturer's written instructions.

1. Defer joint filling until concrete has aged at least six months. Do not fill joints until construction traffic has permanently ceased.

B. Remove dirt, debris, saw cuttings, curing compounds, and sealers from joints; leave contact faces of joint clean and dry.

C. Install semirigid epoxy joint filler full depth in saw-cut joints and at least 2 inches (50 mm) deep in formed joints. Overfill joint and trim joint filler flush with top of joint after hardening.

3.16 CONCRETE SURFACE REPAIRS

A. Defective Concrete: Repair and patch defective areas when approved by Architect. Remove and replace concrete that cannot be repaired and patched to Architect's approval.

B. Patching Mortar: Mix dry-pack patching mortar, consisting of one-part Portland cement to two and one-half parts fine aggregate passing a No. 16 (1.2-mm) sieve, using only enough water for handling and placing.

C. Repairing Formed Surfaces: Surface defects include color and texture irregularities, cracks, spalls, air bubbles, honeycombs, rock pockets, fins and other projections on the surface, and stains and other dis- colorations that cannot be removed by cleaning.

1. Immediately after form removal, cut out honeycombs, rock pockets, and voids more than 1/2 inch (13 mm) in any dimension in solid concrete but not less

than 1 inch (25 mm) in depth. Make edges of cuts perpendicular to concrete surface. Clean, dampen with water, and brush-coat holes and voids with bonding agent. Fill and compact with patching mortar before bonding agent has dried. Fill form-tie voids with patching mortar or cone plugs secured in place with bonding agent.

2. Repair defects on surfaces exposed to view by blending white Portland cement and standard port- land cement so that, when dry, patching mortar will match surrounding color. Patch a test area at inconspicuous locations to verify mixture and color match before proceeding with patching. Com- pact mortar in place and strike off slightly higher than surrounding surface.

3. Repair defects on concealed formed surfaces that affect concrete's durability and structural performance as determined by Architect.

D. Repairing Unformed Surfaces: Test unformed surfaces, such as floors and slabs, for finish and verify sur- face tolerances specified for each surface. Correct low and high areas. Test surfaces sloped to drain for trueness of slope and smoothness; use a sloped template.

1. Repair finished surfaces containing defects. Surface defects include spalls, popouts, honeycombs, rock pockets, crazing and cracks in excess of 0.01 inch (0.25 mm) wide or that penetrate to reinforcement or completely through unreinforced sections regardless of width, and other objectionable conditions.

2. After concrete has cured at least 14 days, correct high areas by grinding.

3. Correct localized low areas during or immediately after completing surface finishing operations by cutting out low areas and replacing with patching mortar. Finish repaired areas to blend into adjacent concrete.

4. Correct other low areas scheduled to receive floor coverings with a repair underlayment. Prepare, mix, and apply repair underlayment and primer according to manufacturer's written instructions to produce a smooth, uniform, plane, and level surface. Feather edges to match adjacent floor elevations.

5. Correct other low areas scheduled to remain exposed with a repair topping. Cut out low areas to ensure a minimum repair topping depth of 1/4 inch (6 mm) to match adjacent floor elevations. Pre- pare, mix, and apply repair topping and primer according to manufacturer's written instructions to produce a smooth, uniform, plane, and level surface.

6. Repair defective areas, except random cracks and single holes 1 inch (25 mm) or less in diameter, by cutting out and replacing with fresh concrete. Remove defective areas with clean, square cuts and expose steel reinforcement with at least 3/4 inch (19 mm) clearance all around. Dampen concrete surfaces in contact with patching concrete and apply bonding agent. Mix patching concrete of same materials and mix as original concrete except without coarse aggregate. Place, compact, and finish to blend with adjacent finished concrete. Cure in same manner as adjacent concrete.

7. Repair random cracks and single holes 1 inch (25 mm) or less in diameter with patching mortar. Groove top of cracks and cut out holes to sound concrete and clean off dust, dirt, and loose particles. Dampen cleaned concrete surfaces and apply bonding agent. Place patching mortar before bonding agent has dried. Compact patching mortar and finish to match adjacent concrete. Keep patched area continuously moist for at least 72 hours.

E. Perform structural repairs of concrete, subject to Architect's approval, using epoxy adhesive and patching mortar.

F. Repair materials and installation not specified above may be used, subject to Architect's approval.

3.17 FIELD QUALITY CONTROL

A. Testing Agency: Owner will engage a qualified independent testing and inspecting agency to sample materials, perform tests, and submit test reports during concrete placement. Sampling and testing for quality control may include those specified in this Article.

B. Testing Services: Testing of composite samples of fresh concrete obtained according to ASTM C 172 shall be performed according to the following requirements:

1. Testing Frequency: Obtain one composite sample for each day's pour of each concrete mix exceeding 5 cu. yd. (4 cu. m), but less than 25 cu. yd. (19 cu. m), plus one set for each additional 50 cu. yd. (38 cu. m) or fraction thereof.

    a. When frequency of testing will provide fewer than five compressive-strength tests for each concrete mix, testing shall be conducted from at least five randomly selected batches or from each batch if fewer than five are used.

2. Slump: ASTM C 143; one test at point of placement for each composite sample, but not less than one test for each day's pour of each concrete mix. Perform additional tests when concrete consistency appears to change.

3. Air Content: ASTM C 231, pressure method, for normal-weight concrete; ASTM C 173, volumetric method, for structural lightweight concrete; one test for each composite sample, but not less than one test for each day's pour of each concrete mix.

4. Concrete Temperature: ASTM C 1064; one test hourly when air temperature is 40 deg F (4.4 deg C) and below and when 80 deg F (27 deg C) and above, and one test for each composite sample.

5. Compression Test Specimens: ASTM C 31/C 31M; cast and laboratory cure one set of six standard cylinder specimens for each composite sample.

    a. Cast and field cure one set of six standard cylinder specimens for each composite sample.

6. Compressive-Strength Tests: ASTM C 39; test three laboratory-cured specimens at 7 days and three at 28 days for normal reinforced concrete and three field-cured at 1 day for postensioned concrete slabs and other structural elements.

    a. A compressive-strength test shall be the average compressive strength from three specimens obtained from same composite sample and tested at age indicated.

C. When strength of field-cured cylinders is less than 85 percent of companion laboratory-cured cylinders, Contractor shall evaluate operations and provide corrective procedures for protecting and curing in-place concrete.

D. Strength of each concrete mix will be satisfactory if every average of any three consecutive compressive- strength tests equals or exceeds specified compressive strength and no compressive-strength test value falls below specified compressive strength by more than 500 psi (3.4 MPa).

E. Test results shall be reported in writing to Architect, concrete manufacturer, and Contractor within 48 hours of testing. Reports of compressive-strength tests shall contain Project identification name and number, date of concrete placement, name of concrete testing and inspecting agency, location of concrete batch in Work, design compressive strength at 28 days, concrete mix proportions and materials, compressive breaking strength, and type of break for both 7-and 28-day tests.

F. Nondestructive Testing: Impact hammer, sonoscope, or other nondestructive device may be permitted by Architect but will not be used as sole basis for approval or rejection of concrete.

G. Additional Tests: Testing and inspecting agency shall make additional tests of concrete when test results indicate that slump, air entrainment, compressive strengths, or other requirements have not been met, as directed by Architect. Testing and inspecting agency may conduct tests to determine adequacy of concrete by cored cylinders complying with ASTM C 42 or by other methods as directed by Architect.

END OF SECTION 03300

SECTION 07 52 19
MODIFIED BITUMEN SHEET ROOFING

PART I - GENERAL

1 .01 SUMMARY

A. Insulation
B. Base Sheet.
C. Base Sheet Fasteners/Plates.
D. Modified Bitumen Interply Membrane.
E. Modified Bitumen Sheet Roofing.
F. Modified Bitumen Flashings.
G. Roof Accessories.
H. Walkways.
I. Surfacing.

I .02 RELATED SECTIONS

A. Division 6 Section Carpentry: Wood Nailers.
B. Division 7 Section Flashing and Sheet Metal: Metal counter Flashings, etc.
C. Division 7 Section Roof Specialties: Roof Hatches, Prefabricated Curbs.
D. Division 7 Section Sealants Caulks, Sealants.
E. Division 15 Section Drainage and Vent Systems: Roof Drains.

I .03 REFERENCES

A. ASTM-American Society for Testing and Material.
B. AWPB-American Wood Preservers' Bureau. C. ASTM D41 -Asphalt Primer Used in Roofing. D. NRCA-National Roofing Contractors Association. E. ASTM D3601 1 or II-Asphalt Glass Felt Used in Roofing. F. ASTM D312-Asphalt used in Roofing.
C. UL-Underwriters Laboratories, Fire Classification.
D. RIC/TIMA — The Roof Insulation Committee of the Thermal Insulation Manufacturers Association.
E. SMACNA-Sheet Metal and Air Conditioning Contractors National Association.
F. FS HH-1 529b-Insulation Board, Thermal, Mineral Aggregate.
G. ASTM DI 227-Asphalt Emulsion as a Roof Coating.
H. ASTM DI 863-Mineral Aggregate.
I. ASTM D2824-Aluminum Pigmented Asphalt Roof Coating.
J. EPA, Energy Star Program.

I .04 REGULATORY REQUIREMENTS

A. Additional Test Agencies & Building Code Requirements: As Applicable.

I .05 SUBMITTALS

A. Submit product data for: All components to be used, i.e: Primer, Membranes, Coatings, et al.

B. Only substitutions equal or better approved in writing by Owner prior to scheduled installation will be considered.

I .06 QUALITY ASSURANCE

A. Manufacturer.

1. Shall provide local Technical Sales Representative to make start-up inspection and in-progress site inspections at regular intervals.
2. Shall provide final inspection of completed roofing system and issuance of the warranty.

B. Contractor.

1. Roofing contractor shall be a registered applicator by the Manufacturer.
2. Contractor shall retain a workmanship warranty for the specified system within the manufacturer's warranty.
3. Strict adherence to the manufacturer's most current published specifications are to be followed. Deviations must be approved in writing by the architect and manufacturer prior to installation.

C. Designation of Responsible Personnel.

D. Walkover Inspection.

1. Attendance: Representative of Owner/Architect, General Contractor, Roofing Contractor and Manufacturer's Technical Representative.

E. Final Inspection.

1. Attendance: Representative of Owner/Architect, General Contractor, Roofing Contractor and Membrane Manufacturer's Technical Representative.

2. Minimum agenda:

a. Walkover inspection.
b. Identification of problems which may impede issuance of warranty.
c. Creation of punch list.

I .07 DELIVERY STORAGE AND HANDLING

A. Delivery of Materials.

1. Deliver and store materials under provisions of Specifications.
2. Deliver materials to job-site in new, dry, unopened and well marked containers showing product and manufacturer's name, production date and/or product code. All materials delivered shall be on pallets.
3. Deliver materials in sufficient quantity to allow continuity of work.

B. Storage of Materials.

1. Storage of plies to be protected from water or extreme humidity.

2. Store all roll roof materials on end to prevent their becoming deformed/damaged. Discard rolls which have flattened, creased or otherwise damaged.

3. Place materials on pallets which are at least four (4) inches above the ground. Do not stack pallets.
4. Rooftop Storage: Disperse materials to avoid concentrated loading.
5. Cover top and sides of all exterior stored materials with canvas tarpaulin (not polyethylene). Secure tarpaulin.

C. Material Handling.

1. Handle plies to avoid bending, tearing or other damage during transportation and installation.
2. Material handling equipment shall be selected and operated so as not to damage existing construction or applied roofing. Do not operate or situate material handling equipment in location(s) that will hinder smooth flow of vehicular or pedestrian traffic.

D. Safety Requirements.

1. All application, material handling and associated equipment shall conform to and be in conformance with OSHA safety requirements.
2. Comply with Federal, State, Local and Owner fire safety requirements.
3. Maintain fire extinguishers within easy access whenever power tools, kettles or torches are being used.

I .08 ENVIRONMENTAL REQUIREMENTS

A. Do not apply roofing membrane during inclement weather.
B. Do not apply roofing membrane to damp or frozen substrates.
C. Do not expose materials vulnerable to water or sun damage in quantities greater than can be weatherproofed during the same day.

I .09 WARRANTY

A. Manufacturer shall provide:
1. 12 years.
2. Workmanship and Materials.
3. Total System Warranty.

PART 2 – PRODUCTS

2.01 MANUFACTURERS

A. Basis of design is Two ply Styrene Butadiene Styrene (SBS) Modified Bituminous Composite Reinforcement Roofing System with new rigid insulation over metal deck and over concrete deck by local manufacturer.
B. Approved equal substitutions are allowed.

2.02 SHEET MATERIALS

A. Base Sheet- One Ply of glass fiber reinforcement SBS Membrane. Shall meet or exceed the requirements of ASTM 6163-00 Type I Grade S.
    1. Thickness min in mils (mm) = (2.0)
    2. Net ,mass/unit area, min lbs/100ft2 (g/m2) = 45 (2197)
    3. Max. load at 0 +/- 3.6 grad Fahrenheit (-18 +/-2 grad Celsius) = 70 (12.3)
    4. Elongation at 0 +/- 3.6 grad Fahrenheit (-18 +/-2 grad Celsius) = 1
    5. Elongation at 73.4 +/- 3.6 grad Fahrenheit (23 +/-2 grad Celsius) MD and XMD, min. at max load before and after heat conditioning (%) = 2
    6. Tear strength at 73.4 +/- 3.6 grad Fahrenheit (23 +/-2 grad Celsius) Min.,lbf(N)=35 (156)
    7. Roll Min weight per 100 SF = 45 lbs (20.5 kg)

B. Modified Bitumen Membrane: SBS Modified Bitumen top membrane with a polyester mat reinforcement, finished with ceramic granule as top protection surface area and burn-off film or silica sand on the other side. ASTM-D-6164-00 Type I Grade G and UBC Standard 15-6-E.

    1. Thickness min in mils (mm) = (3.3)
    2. Net ,mass/unit area, min lbs/100ft2 (g/m2) = 75 (3661)
    3. Max. load at 0 +/- 3.6 grad Fahrenheit (-18 +/-2 grad Celsius) = 70 (12.3)
    4. Elongation at 0 +/- 3.6 grad Fahrenheit (-18 +/-2 grad Celsius) = 20
    5. Elongation at 73.4 +/- 3.6 grad Fahrenheit (23 +/-2 grad Celsius) MD and XMD, min. at max load before and after heat conditioning (%) = 35
    6. Tear strength at 73.4 +/- 3.6 grad Fahrenheit (23 +/-2 grad Celsius) Min.,lbf(N)=55 (246)
    7. Roll Min weight per 100 SF = 75 lbs (20.5 kg)

C. Cold Adhesive- SBS Adhesive Solvent based cold process asphaltic adhesive, asbestos free, specially formulated to bond SBS membranes to insulation and other membranes in compliance to ASTM 3019 Type III and ASTM D3409. Application requires min. 1.5 gallons per square in smooth surface as required in codes. Approximate weight: 10 pounds per Gallons or 50lb per pail.

D. Insulation- Polyisocyanurate Insulation rigid board insulation consisting of a glass-fiber-reinforced polyisocyanurate foam core laminated between 1 mil smooth, reflective aluminum foil facers.

E. Flashing, cant strips, insulation anchorage and accessories acceptable to the Roofing Systems Manufacturer.

F. Termination bars- when specified on drawings, provide a compatible termination bar to secure flashing and membrane acceptable to the roofing systems manufacturers.

2.04 RELATED MATERIALS

A. Sealant: One part urethane.
B. Cants: Perlite, ASTM C728, 4" face.
C. Corrosion Resistant Fasteners.
D. Prefabricated Roof Hatches.

E. Traffic Surfacing: Walking pads: ASTM B-29, 41b. per square foot.
G. Roof Penetrations protection: One-part precast curb components, 1-Part polyether pourable sealant, and structural adhesive/sealant designed for compatible roofing.
H. Grease Containment: Guard system installed around the curb of exhaust fans to catch any output of greases, oils, fats, or other chemicals. System to be compatible with roofing system.

PART 3 – EXECUTION

3.01 EXAMINATION AND PROTECTION

A. Inspection.

1. Verify installation conditions as satisfactory to receive work.
2. Do not install new roofing until all unsatisfactory conditions are corrected. Beginning work constitutes acceptance of conditions.
3. Check projections, curbs and deck for inadequate anchorage, foreign material, moisture, or unevenness that would prevent quality of execution of the new roofing system.

A. General Workmanship.

1. Substrate: Free of foreign particles prior to laying roof membrane.
2. Phased application: Not permitted, all plies shall be completed each day.
3. Confine equipment, storage of materials, debris and the operations and movement of workers within the limits agreed upon for the project.
4. Where wheeled or other traffic over partially completed roofing is unavoidable, provide adequate exterior protection to the roof.
5. Wrapper and package materials: Not to be included in roof system.
6. All metal and masonry shall be asphalt primed before fully adhering flashing sheets.
7. Mechanical Fasteners: Seated firmly with fastener heads flush or below surface.
8. Base flashing height is not less than eight (8) inches above finished surface.

B. Protection.

1. Contractor shall be responsible for protection of property during course of work. Lawn, shrubbery, paved areas and building shall be protected from damage at no extra cost.
2. Roofing and flashing shall be installed and sealed in a watertight manner on same day of installation or upon the arrival of inclement weather.
3. At the end of each work day, partial installation shall be sealed with water stops along edges to prevent water entry.
4. At the start of each work day, drains within daily work area shall be plugged. Plugs are to be removed at end of each work day or before arrival of inclement weather.
5. Preparation work shall be limited to those areas that can be covered with installed roofing material on same day or before arrival of inclement weather.

6. Arrange work sequence to avoid use of newly constructed roofing for storage, walking surface and equipment movement. Move equipment and ground storage areas as work progresses.

C. Surface Preparation.

1. Remove all existing roof membrane, flashings and rigid insulation.
2. Verify structural integrity of the deck. Notify the Architect of any deck or curb deficiency.
3. Remove deteriorated or damaged wood blocking and install new treated wood blocking to match existing.

3.02 APPLICATION OF INSULATION AND ROOFING:

1. On concrete structures- cold adhere insulation board to concrete deck using a one-component, moisture-cured polyurethane adhesive gun applied from pre-pressurized container.
2. On metal deck structures- mechanically fasten the insulation board over metal deck. Refer to fastener layout in drawings and/or standard specifications.
3. Apply insulation, cold adhesive, or membranes over clean dry roof deck in strict conformance with the manufacturer's specification
4. Cant strips shall be provided at all intersections of roof surfaces with vertical walls, parapets and curbs. Roofing layers shall be turned up against cant strip and trimmed parallel with upper edge of cant strip.
5. Roofing shall fit neatly around all pipes, vents, drains, smoke vents and curbs and be sealed with plastic roof cement Metal flanges of smoke vents, pipes, fans, etc., shall be embedded in cold adhesive between layers of roofing. Edges shall be sealed in roofing with 6" wide cold adhesive saturated web fabric, mopped.
6. At all open edges, treated wood blocking, equal in thickness to the insulation, shall be firmly fastened to the roof decking as indicated on the drawings. Around all roof openings, vents, stacks, drains, etc., treated wood blocking nailer strips shall be installed and securely fastened to the metal deck.
7. Flashings: Aluminum metal as specified in the drawings attached,
8. All materials shall be applied over a clean, dry insulation board as specified by the manufacturer.

3.03 SITE CONDITIONS

1. The Contractor shall at all times keep materials and equipment in orderly, safe arrangement, minimize conflicts with other trades, protect surrounding existing building and equipment.
2. At the completion of the work, or whenever directed, the contractor shall remove all rubbish and unused materials accumulated in connection with the Work, and leave the roofs in a clean and acceptable condition.
3. Strictly comply with all safety regulations.

3.04 APPROVALS

1. All roofing materials method of application and method of fastening shall conform to UCB requirements for Class I-120 uplift and UCB Class A Roof. Evidence of compliance is required for submittals approval.
2. All materials shall be delivered in packages bearing the manufacturers label or identifying mark. Each package of asphalt shingles, mineral surfaced roll roofing, life retardant-

treated wood shingles and shales, modified bitumen, thermoplastic and thermoset membranes, and build-up roofing ply materials shall bear the label of an approved agency having a service for the inspection of material and finished products during manufacture.

3.05 WARRANTY:

1. Roofing and flashing shall be guaranteed to remain water tight and in good conditions for a period of twelve (12) years from the date of acceptance of the work by the owner. The Contractor shall provide bonded roof guarantee through a surety Company for the total cost of the roofing work, or other guarantee acceptable to the Owner to make any repair and replacement needed on the roof without any additional cost to the Owner, for any part of the roof that fails to meet the guarantee during that period.

2. In lieu of the written bonded roof guarantee through a surety Company referred to above, the Contractor may file with the Owner a 12 years guarantee of a responsible manufacturer of the material used or to be used in the roofing work; provide, however, that in consideration thereof, the Contractor hereby authorizes the Owner (1) to proceed with and make any repairs for the account and at the expenses of the Contractor in the event the later or any subcontractor thereof fails to undertakes such work within 7 days after being requested in writing to do so as an obligation included in the guarantee of the Contractor, any amounts expended by the owner pursuant to (1) above, as weIl as the amount of any claim, action or demand of the Owner against the Contractor, predicated upon or arising from such roofing work so guaranteed by the Contractor.

END OF SECTION 07 52 19

SECTION 08 13 13

HOLLOW METAL DOORS

PART 1 -GENERAL

1.1 SECTION INCLUDES

A. Examination of substrates, cures and conditions.

B. Preparation.

C. Installation of hollow metal doors.

D. Adjusting and cleaning.

1.2 RELATED SECTIONS

A. Section 08 71 00 – Door Hardware

B. Section 09 91 00 – Painting: Field painting of hollow metal doors.

1.3 REFERENCES

A. ANSI/DHI A115 Series (ANSI A115.1 through ANSI A115.18) – Specifications for Steel Door and Frame Preparation for Hardware.

B. ANSI/SDI A250.3 – Test Procedure and Acceptance Criteria for Factory Applied Finish Painted Steel Surfaces for Steel Doors and Frames.

C. ANSI/SDI A250.4 – Test Procedure and Acceptance Criteria for Physical Endurance for Steel Doors and Hardware Reinforcing.

D. ANSI/SDI A250.6 – Recommended Practice for Hardware Reinforcing on Standard Steel Doors and Frames.

E. ANSI/SDI A250.8 – Recommended Specifications for Standard Steel Doors and Frames.

F. ANSI/SDI A250.10 – Test Procedure and Acceptance Criteria for Prime Painted Steel Surfaces for Steel Doors and Frames.

G. ASTM A153 – Zinc Coated (Hot Dip) on Iron and Steel Hardware.

H. ASTM A591 – Steel Sheet, Electrolytic Zinc – Coated, for Light Coating Weight (Mass) Application.

I. ASTM A653 – Steel Sheet, Zinc Coated (Galvanized) or Zinc Iron Alloy coated (Galvannealed) by the Hot Dip Process.

J. ASTM A1008 – Steel, Sheet, Cold Rolled, Carbon, Structural, High Strength Low Alloy and High Strength Low Alloy with Improved Formability.

K. ASTM C665 – Mineral Fiber Blanket Thermal Insulation for Light

Frame Construction and Manufactured Housing.

L. ASTM C1363 – Test Method for the Thermal Performance of Building Assemblies by Means of a Hot Box Apparatus.

M. ASTM E136 – Test Method for Behavior of Materials in a Vertical Tube Furnace at 750 Degree C.

N. HMMA 840– Installation and Storage of Hollow Metal Doors and Frames.

O. NFPA 80 – Fire Doors and Fire Windows (ANSI).

P. NFPA 105 – Installation of Smoke Control Door Assemblies (ANSI).

Q. NFPA 252 – Fire Test of Door Assemblies (ANSI).

R. SSPC Paint 12 – Paint Specification No. 12: Cold Applied Asphalt Mastic (Extra Thick Film).

S. SDI 117 – Manufacturing Tolerances for Standard Steel Doors and Frames.

T. SDI 111E – Recommended Guidelines for the Use of Gasketing and Thresholds for Standard Steel Doors and Frames.

U. SDI 118 – Basic Fire Door Requirements.

V. SDI 122 – Installation and Troubleshooting Guide for Standard Steel Doors and Frames.

W. TM5-855-1 - Fundamentals of Design for Conventional Weapons; Department of Army.

1.4 DEFINITIONS

A. Minimum Thickness: Minimum thickness of base metal without coatings.

B. Hollow Metal Work: Hollow metal work fabricated according to ANSI/SDI A250.8.

1.5 SUBMITTALS

A. Section 01 33 40 – Shop Drawings, Product Data and Samples – Requirements for submittals.

B. Product Data: For each type of product indicated. Include construction details, material descriptions, core descriptions, fire-resistance rating, temperature-rise ratings, and finishes.

C. NOT USED.

D. Shop Drawings: Include the following:

1. Elevations of each door design.

2. Details of doors and frames, including vertical and horizontal edge details and

metal thicknesses.

3. Locations of reinforcement and preparations for hardware.

4. Details of accessories.

5. Details of conduit and preparations for power, signal and control systems.

E. Samples for Initial Selection: For units with factory-applied color finishes.

F. Samples for Verification:

1. For each type of exposed finish required, prepared on Samples of not less than 3 by 5 inches.

2. For the following items, prepared on Samples about 12 by 12 inches to demonstrate compliance with requirements for quality of materials and construction:

a. Doors: Show vertical-edge, top, and bottom construction; core construction; and hinge and other applied hardware reinforcement. Include separate section showing glazing if applicable.

G. Other Action Submittals:

1. Schedule: Provide a schedule of hollow metal doors prepared by or under the supervision of supplier, using same reference numbers for details and openings as those on Drawings. Coordinate with door hardware schedule.

H. Oversize Construction Certification: For assemblies required to be fire rated and exceeding limitations of labeled assemblies.

I. Product Test Reports: Based on evaluation of comprehensive tests performed by a qualified testing agency, for each type of hollow metal door and frame assembly.

1.6 QUALITY ASSURANCE

A. Source Limitations: Obtain hollow metal doors and frames from single source from single manufacturer.

D. Preinstallation Conference: Conduct conference at Project site.

1.7 DELIVERY, STORAGE, AND HANDLING

A. Deliver hollow metal doors palletized, wrapped, or crated to provide protection during transit and Project-site storage. Do not use nonvented plastic.

B. Store hollow metal doors under cover at Project site. Place in stacks of five units maximum in a vertical position with heads up, spaced by blocking, on minimum 4-inch- high wood blocking. Do not store in a manner that traps excess humidity.

1. Provide minimum 1/4-inch space between each stacked door to permit air circulation.

C. Remove damp or wet packaging immediately and wipe affected surfaces dry. Replace damaged materials with new.

1.8 PROJECT CONDITIONS

A. Field Measurements: Verify actual dimensions of openings by field measurements before fabrication.

1.9 WARRANY

PART 2 PRODUCTS

2.1 ACCEPTABLE MANUFACTURERS – HOLLOW METAL DOORS

A. Amweld Building Products, LLC.

B. Ceco Door Products; an Assa Abloy Group Company.

C. Curries Company; an Assa Abloy Group Company.

D. Firedoor Corporation

E. Pioneer Industries, Inc.

F. Steelcraft

G. Or, “Approve as Equal”.

2.2 MATERIALS – HOLLOW METAL DOORS

A. Metallic-Coated Steel Sheet: ASTM A 653, Commercial Steel (CS), Type B; with minimum G60 (Z180) or A60 (ZF180) metallic coating (zinc-alloy-iron coating-galvannealed).

B. Inserts, Bolts, and Fasteners: Hot-dip galvanized according to ASTM A 153.

2.3 FABRICATION - HOLLOW METAL DOORS

A. General: Provide doors of design indicated, not less than thickness indicated; fabricated with smooth surfaces, without visible joints or seams on exposed faces and edges. Comply with ANSI/SDI A250.8.

1. Design: Flush panel.

2. Core Construction: Manufacturer's standard kraft-paper honeycomb, polystyrene, polyurethane, polyisocyanurate, mineral-board, or vertical steel-stiffener core.

a. Fire Door Core:As required to provide fire- protection and temperature-rise ratings indicated.

3. Vertical Edges for Single-Acting Doors: Beveled edge. a. Beveled

Edge: 1/8 inch in 2 inches.

4. Top Edge: Closed with flush 0.042-inch- thick, end closures of same material as face sheets. Top edge shall be sealed to prevent water intrusion.

5. Bottom Edge: Closed with flush or inverted 0.042-inch thick, end closures or channels or same material as face sheets.

6. Tolerances: Comply with SDI 117, "Manufacturing Tolerances for Standard Steel Doors and Frames."

B. Interior Doors: Face sheets fabricated from metallic-coated sheet. Provide doors complying with requirements indicated below by Referencing ANSI/SDI A250.8 for level and model and ANSI/SDI A250.4 for physical performance level:

1. Level 2 and Physical Performance Level B (Heavy Duty), Model 2 (Seamless).

C. Hardware Reinforcement: Fabricate according to ANSI/SDI A250.6 with reinforcing plates from same material as door face sheets.

D. Fabricate concealed stiffeners and hardware reinforcement from either cold- or hot-rolled steel sheet.

2.4 HOLLOW METAL DOORS - STOPS AND MOLDINGS

A. Moldings for Glazed Lites in Doors: Minimum 0.032 inch thick, fabricated from same material as door face sheet in which they are installed.

2.5 FABRICATION – HOLLOW METAL DOORS

A. Fabricate Hollow metal doors to be rigid and free of defects, warp, or buckle. Accurately form metal to required sizes and profiles, With minimum radius for thickness of metal. Where practical, fit and assemble units in manufacturer's plant. To ensure proper assembly at Project site, clearly identify work that cannot be permanently factory assembled before shipment.

B. Tolerances: Fabricate hollow metal doors to tolerances indicated in SDI 117.

C. Hollow Metal Doors:

1. Exterior Doors: Provide weep-hole openings in bottom of exterior doors to permit moisture to escape. Seal joints in top edges of doors against water penetration.

D. Fabricate concealed stiffeners, edge channels, and hardware reinforcement from either cold- or hot-rolled steel sheet.

E. Hardware Preparation: Factory prepare hollow metal doors to receive templated mortised hardware; include cutouts, reinforcement, mortising, drilling, and tapping according to the Door Hardware Schedule and templates furnished as specified in Section 08 71 00.

1. Locate hardware as indicated, or if not indicated, according to ANSI/SDI A250.8.

2. Reinforce doors to receive nontemplated, mortised and surface- mounted door

hardware.

3. Comply with applicable requirements in ANSI/SDI A250.6 and ANSI/DHI A115 Series specifications for preparation of hollow metal doors for hardware.

2.6 STEEL FINISHES – HOLLOW METAL DOORS

A. Prime Finish: Apply manufacturer's standard primer immediately after cleaning and pretreating.

1. Shop Primer: Manufacturer's standard, fast-curing, lead- and chromate-free primer complying with ANSI/SDI A250.10 acceptance criteria; recommended by primer manufacturer for substrate; compatible with substrate and field-applied coatings despite prolonged exposure.

B. Final Finish

PART 3 -EXECUTION

3.1 EXAMINATION

A. Examine substrates, areas, and conditions, with Installer present, for compliance with requirements for installation tolerances and other conditions affecting performance of the Work.

B. For the record, prepare written report, endorsed by Installer, listing conditions detrimental to performance of the Work.

C. Proceed with installation only after unsatisfactory conditions have been corrected.

3.2 PREPARATION

A. Drill and tap doors to receive nontemplated, mortised, and surface-mounted door hardware.

3.3 INSTALLATION – HOLLOW METAL DOORS

A. General: Install hollow metal doors plumb, rigid, properly aligned, and securely fastened in place; comply with Drawings and manufacturer's written instructions.

B. Hollow Metal Doors: Fit hollow metal doors accurately in frames, within clearances specified below. Shim as necessary.

1. Fire-Rated Doors: Install doors with clearances according to NFPA 80.

3.4 ADJUSTING AND CLEANING

A. Final Adjustments: Check and readjust operating hardware items immediately before final inspection. Leave work in complete and proper operating condition. Remove and replace defective work, including hollow metal work that is warped, bowed, or otherwise unacceptable.

B. Remove grout and other bonding material from hollow metal doors immediately after installation.

C. Metallic-Coated Surfaces: Clean abraded areas and repair with galvanizing repair paint according to manufacturer's written instructions.

END OF
SECTION

SECTION 09 24 00
PORTLAND CEMENT PLASTERING

PART 1 - GENERAL

1.1 DESCRIPTION

A. This section specifies lathing and portland cement based plaster.

1.2 TERMINOLOGY

A. Definitions and description of terms to be in accordance with ASTM C11, ASTM C926, ASTM C1063 and as specified.
B. Underside of Structure Overhead: In spaces where steel trusses or bar joists are shown, the underside of structure overhead is defined as the underside of the floor or roof construction supported by beams, trusses, and bar joists.
C. Self-furring Lath: Metal plastering bases having dimples or crimps designed to hold the back plane of the lath 6 to 10 mm (1/4 to 3/8 inch) away from the plane of the solid backing.
D. Solid Backing or Solid Bases: Concrete, masonry, sheathing, rigid insulation, and similar materials to which plaster is directly applied.
E. Wet Areas: Areas of a building where cyclic or continuous exposure to very humid or wet conditions, or in which a dew point condition may occur in the plaster.

1.3 SUBMITTALS

A. Submit in accordance with Section 01 340-0118 Shop Drawings, Product Data & Samples.
B. Manufacturer's Literature and Data:
    1. Accessories for plaster, each type.
    2. Metal plastering bases, each type.
    3. Fasteners.
    4. Bonding compounds, including application instructions.
    5. Admixtures, including mixing and application instructions.
C. Samples:
    1. Accessories for plaster, each type, not less than 152 mm (6 inches) long.

1.4 DELIVERY, STORAGE AND PROTECTION

A. Deliver manufactured materials in the manufacturers' original unbroken packages or containers which are labeled plainly with the manufacturers' names and brands. Keep cementitious materials dry and stored off the ground, under cover, and away from sweating walls and other damp surfaces until ready for use.

1.5 QUALITY ASSURANCE

A. Installers Qualifications: Work is to be performed by installer having a minimum of three (3) years' experience for work relating to this Section.

1.6 PERFORMANCE REQUIREMENTS

A. Where indicated on construction documents, provide cement plaster assemblies identical to those of assemblies tested for fire resistance according to ASTM E119 by a qualified testing agency.
B. Where indicated on construction documents provide cement plaster assemblies identical to those of assemblies tested for STC ratings according to ASTM E90 and classified according to ASTM E413 by a qualified testing agency.

1.7 APPLICABLE PUBLICATIONS

A. The publications listed below form a part of this specification to the extent referenced. The publications are referenced in the text by basic designation only.
B. ASTM International (ASTM):

A653/A653M-20 ..... Steel Sheet, Zinc-Coated (Galvanized) or Zinc-Iron Alloy-Coated (Galvannealed) by the Hot-Dip Process

A1064/A1064M-18a..... Carbon-Steel Wire and Welded Wire Reinforcement, Plain and Deformed, for Concrete

C11-18b ..... Terminology Relating to Gypsum and Related Building Materials and Systems.

C91/C91M-18..... Masonry Cement

C150/C150M-20..... Portland Cement

C206-14 ..... Finishing Hydrated Lime

C207-18 ..... Hydrated Lime for Masonry Purposes

C260/C260M-10a(2016)..... Air Entraining Admixtures for Concrete.

C847-18 ..... Metal Lath

C897-15(2020) ..... Aggregate for Job-Mixed Portland Cement Based Plasters
C926-20 ..... Application of Portland Cement-Based Plaster
C932-06(2019) ..... Surface-Applied Bonding Compounds for Exterior Plastering
C933-18 ..... Welded Wire Lath
C979/C979M-16 ..... Pigments for Integrally Colored Concrete
C1002-18 ..... Steel Self-Piercing Tapping Screws for the Application of Gypsum Panel Products or Metal Plaster Bases to Wood Studs or Steel Studs
C1063-19a ..... Installation of Lathing and Furring to Receive Interior and Exterior Portland Cement-Based Plaster
E90-09(2016) ..... Test Method for Laboratory Measurement of Airborne Sound Transmission Loss of Building Partitions and Elements
E119-20..... Test Methods for Fire Tests of Building Construction and Materials
E413-16..... Classification for Rating Sound Insulation

C. Commercial Item Description (CID):

A-A-55615-95(R2006) ..... Shield, Expansion (Wood Screw and Lag Bolt Self-Threading Anchors)

PART 2 - PRODUCTS

2.1 ACCESSORIES FOR CEMENT PLASTER:

A. Cornerbeads: Fabricated from zinc-coated (galvanized) steel or plastic.
   1. Smallnose cornerbead with expanded flanges; use unless otherwise indicated on construction documents.
   2. Smallnose cornerbead with perforated flanges; use on curved corners.
   3. Smallnose cornerbead with expanded flanges reinforced by perforated stiffening rib; use on columns and for finishing unit masonry corners.

2.2 FASTENERS

A. Tie, wire, screws, staples, clips, nails, and other fasteners ASTM C1063, except as otherwise specified.

B. Provide fasteners for securing metal plastering bases having heads, or inserted through washers large enough to engage two (2) strands (two (2) on each side of screw) of the metal plastering base.
C. For fire rated construction; provide fasteners of type and size as used in fire rated test.
D. Screws: ASTM C1002.
E. Expansion Shields: CID A-A-55615, of the Type and Class applicable.

2.3 CEMENT

A. Portland: ASTM C150/C150M, Type I.
B. Masonry: ASTM C91/C91M, Type N.
C. //White where required for white finish coat.

2.4 LIME

A. ASTM C206, Type S; or ASTM C207, Type S.

2.5 AGGREGATES (SAND)

A. ASTM C897, graded as required to suit texture of finish specified.
B. //White where white finish coat is specified.

2.6 BONDING AGENT

A. ASTM C932.

PART 3 - EXECUTION

3.1 METAL PLASTERING BASES (LATH) LOCATIONS

A. Where plaster is required on solid concrete or masonry bases, metal plastering bases are not required, unless shown on the construction documents.

3.2 INSTALLING PLASTERING ACCESSORIES

A. Install accessories in accordance with ASTM C1063, except as otherwise specified.
    1. Set plastering accessories plumb, level and true to line, neatly mitered at corners and intersections, and securely attach to supporting surfaces.
    2. Install in one (1) piece, within the limits of the longest commercially available lengths.

B. Corner Beads: // External-corner reinforcement // // corner bead // at exterior corners, as required to establish grounds, and where shown on construction documents.

C. Strip Lath:

1. Install centered over joints between dissimilar materials, such as hollow tile, brick, concrete masonry units, concrete, and joints with expanded lath on framing or furring, where both such surfaces are required to be plastered and are in contact with each other in same plane, except where expansion joints and casing beads are required.
2. Wire tie or fasten strip lath to base along both edges at not over 152 mm (6 inches) on centers.

D. Casing Beads:

1. Provide at locations where shown on construction documents and at following locations where plaster terminates to provide finish trim:
    a. Against non-plastered surfaces such as masonry, concrete, and wood.
    b. Against trim of steel frames and trim of other materials and equipment, except where trim overlaps plaster.
    c. Around perimeter of openings except where edge is covered by flanges. Locate to conform to dimensions shown on shop drawings.
    d. Where plaster for new walls or furring (vertical or horizontal) terminates against existing construction.
    e. Both sides of expansion and control joints unless shown otherwise on construction documents.
2. Provide at perimeter angles between walls and ceilings so as to provide floating angle (unrestrained) construction in accordance with ASTM C1063.

3.3 SURFACE PREPARATION OF SOLID BASES

A. Surfaces that are to receive plaster are to be prepared and conditioned in accordance with ASTM C926, except as otherwise specified.

B. New surfaces of masonry and concrete:

1. Remove projections and clean concrete surface of form oil.
2. Fill depressions, holes, cracks and similar voids flush with Portland cement plaster to provide substrate within the tolerance specified in ASTM C926.
3. Use bonding agent.

C. Existing surfaces of concrete and masonry:
    1. Clean surface of dirt and other foreign matter which will prevent bond.
    2. Apply dash bond coat or bonding agent as specified herein.
    3. Where existing surfaces have a coating such as paint or bituminous waterproofing apply metal plastering base as indicated.

3.4 PORTLAND CEMENT BASED PLASTER

A. Provide portland cement based plaster where cement plaster is shown and specified, and as follows:
    1. Three-Coat work is to be used over all metal plastering bases, with or without solid backing.
    2. Two-Coat work may only be used over solid bases conforming to requirements of Paragraph, SURFACE PREPARATION OF SOLID BASES.
B. Proportion, mix and apply plaster in accordance with ASTM C926, except as otherwise specified.
    1. Provide air entrained plaster for all exterior work.
    2. Finish coat is a smooth troweled finish.

END OF SECTION

SECTION 09 91 00
PAINTING

PART 1 - GENERAL

1.1 SECTION INCLUDES

A. Inspection of surfaces.
B. Protection of surface.
C. Surface preparation.
D. Existing Work
E. Application of exterior and interior painting.
F. Cleaning.
G. Schedule of painting – exterior

1.2 RELATED SECTIONS

A. Section 05 50 00 – Metal Fabrications.
B. Section 06 40 23 – Interior Architectural Woodwork.
C. Section 08 12 13 – Standard Hollow Metal Frames.
D. Section 08 13 13 – Standard Hollow Metal Doors.
E. Section 09 21 16 – Gypsum Board Assemblies.

1.3 REFERENCES

A. ASTM D16 -Definitions of Terms Relating to Paint, Varnish, Lacquer, and Related Products.

B. ASTM D523 – Test Method for Specular Gloss

C. ASTM D660 - Method of Evaluating Degree of Checking of Exterior Paints.

D. ASTM D3276 - Recommended Guide for Paint Inspectors.

E. 40 CFR 59, Subpart D – National Volatile Organic Compound Emission Standards for Architectural Coatings.

F. Master Painters Institute (MPI) – MPI Approved Product List.

G. Master Painters Institute (MPI)– MPI Architectural Painting Specifications Manual.

H. Steel Structures Painting Council (SSPC) – Steel Structures Painting Manual.

1.4 QUALITY ASSURANCE

A. Manufacturer: Company specializing in manufacturing products Specified in this section with minimum three years documented experience.

B. Applicator Qualifications: Engage an experienced applicator to perform painting work who has specialized in the application of painting systems similar to that required for

this project and who is acceptable to by manufacturer of specified paint.

C. Applicator Certification: Obtain written certification from manufacturer of paints certifying that Applicator is approved by manufacturer for application of specified paint systems. Provide copy of certification to Architect-Engineer prior to award of paint work.

D. Applicator's Field Supervision: Require Applicator to maintain a full-time supervisor/foreman who is on jobsite during times that paint work is in progress and who is experienced in application of paint systems similar to type and scope required for this Project.

1.5 SUBMITTALS

A. Section 01 33 40 – Shop Drawings, Product Data and Samples.
B. Product Data: Submit data on finishing products.
C. NOT USED
D. Samples:

1. Submit two paper chip samples, 2 x 2 inch in size illustrating range of colors and textures available for each surface finishing product scheduled.

2. Submit two painted samples, illustrating selected colors and textures for each color and system selected with specified coats cascaded. Submit on tempered hardboard 2 x 2 inch in size.

E. Manufacturer's Installation Instructions: Submit special surface preparation procedures, substrate conditions requiring special attention, and any other specific requirements.

1.6 CLOSEOUT SUBMITTALS

A. Operation and Maintenance Data: Submit data on cleaning, touch-up, and repair of painted and coated surfaces.

1.7 MOCKUP

A. Construct mockup panel, 5 feet long by 5 feet wide, illustrating coating color, texture, and finish.
B. Locate where directed by Architect/Engineer.
C. Incorporate accepted mockup as part of Work.

1.8 DELIVERY, STORAGE, AND HANDLING

A. Deliver products to site in sealed and labeled containers; inspect to verify acceptability.

B. Container Label: Include manufacturer's name, type of paint, brand name, lot number, brand code, coverage, surface preparation, drying time, cleanup requirements, color designation, and instructions for mixing and reducing.

C. Paint Materials: Store at minimum ambient temperature of 45 degrees F (7 degrees C) and maximum of 90 degrees F (32 degrees C), in ventilated area, and as required by manufacturer's printed instructions.

1.9 ENVIRONMENTAL REQUIREMENTS

A. Do not apply materials when surface and ambient temperatures are outside temperature ranges required by paint product manufacturer.

B. Do not apply exterior coatings during rain when relative humidity is outside humidity ranges, or moisture content of surfaces exceed those required by paint product manufacturer.

C. Provide lighting level of 80 ft candle measured mid-height at substrate surface.

1.10 WARRANTY

A. Furnish one year manufacturer warranty for paints and coatings.

1.11 EXTRA MATERIALS

A. Furnish extra materials, from the same product run, that match products installed and that are packaged with protection covering for storage and identified with labels describing contents.

1. Paint: 5 percent, but not less than 2 gallons of each material and color applied.

PART 2 - PRODUCTS

2.1 ACCEPTABLE MANUFACTURERS - PAINTING

A. Basis of Design:
1. The Sherwin – Williams Company.

B. Other Acceptable Manufacturers:
1. Benjamin Moore.
2. BLP Mobile Paints Manufacturing.
3. Glidden Coatings.
4. PPG Architectural Finishes.

2.2 MATERIALS - PAINTING

A. MPI Standards: Provide products that comply with MPI standards indicated and that are listed in its “MPI Approved Products List”.

B. Material Compatibility:

1. Provide materials for use within each paint system that are compatible with one another and substrates indicated, under conditions of service and application as demonstrated by manufacturers, based on testing and field experience.

2. For each coat in paint system, provide product recommended in writing by manufacturers of topcoat for use in paint system and on substrate indicated.

C. VOC Content: Products shall comply with VOC limits of authorities having jurisdiction and, for paints and coatings applied at Project site, the following VOC limits, exclusive of colorants added to a tint base, when calculated according to 40 CFR 59, Subpart D (EPA Method24).

1. Flat Paints and Coatings: 50 g/L.

2. Nonflat Paints and Coatings: 150 g/L.

3. Dry-Fog Coatings: 400 g/L.

4. Primers, Sealers, and Undercoaters: 200 g/L.

5. Anticorrosive and Antirust Paints Applied to Ferrous Metals: 250gL.

6. Pretreatment Wash Primers: 420 g/L.

7. Shellacs, Clear: 730 g/L.

8. Shellacs, Pigmented: 550 g/L.

D. Colors: As selected by Architect from manufacturer's full range.

PART 3 - EXECUTION

3.1 INSPECTION OF SURFACES

A. Thoroughly examine surfaces scheduled to be painted prior to commencement of work. Report in writing to Architect/Engineer, any condition that may potentially affect proper application. Do not commence until such defects have been corrected.

B. Correct defects and deficiencies in surfaces which may adversely affect work of this Section.

C. Test shop applied primer for compatibility with subsequent cover materials.

D. Measure moisture content of surfaces using electronic moisture meter. Do not apply finishes unless moisture content of surfaces are below the following maximums:

1. Plaster and Gypsum Wallboard: 12 percent.

2. Concrete: 12 percent.

3.2 PROTECTION OF SURFACES

A. Adequately protect other surfaces from paint and damage. Repair damage as a result of inadequate or unsuitable protection.

B. Furnish sufficient drop cloths, shields, and protective equipment to prevent spray or droppings from fouling surfaces not being painted and in particular, surfaces within storage and preparation area.

C. Place cotton waste, cloths, and material which may constitute a fire hazard in closed metal containers and remove daily from site.

D. Remove electrical plates, surface hardware, fittings and fastenings, prior to painting operations. These items are to be carefully stored, cleaned, and replaced on completion of work in each area. Do not use solvent to clean hardware that may remove permanent lacquer finish.

3.3 SURFACE PREPARATION

A. Surfaces: Correct defects and clean surfaces capable of affecting work of this section. Remove or repair existing coatings exhibiting surface defects.

B. Marks: Seal with shellac those which may bleed through surface finishes.

C. Gypsum Board Surfaces: Fill minor defects with filler compound.
Spot prime defects after repair.

D. Galvanized Surfaces: Remove surface contamination and oils and wash with solvent. Apply coat of etching primer.

E. Concrete Surfaces Scheduled to Receive Paint Finish: Remove dirt, loose mortar, scale, salt or alkali powder, and other foreign matter. Remove oil and grease with solution of tri-sodium phosphate; rinse well and allow to dry. Remove stains caused by weathering of corroding metals with solution of sodium metasilicate after thoroughly wetting with water. Allow to dry.

F. Plaster Surfaces: Fill hairline cracks, small holes, and imperfections with latex patching plaster. Make smooth and flush with adjacent surfaces. Wash and neutralize high alkali surfaces.

G. Uncoated Steel and Iron Surfaces: Remove grease, mill scale, weld splatter, dirt, and rust. Where heavy coatings of scale are evident, remove by hand power tool wire brushing or sandblasting; clean by washing with solvent. Apply treatment of phosphoric acid solution, ensuring weld joints, bolts, and nuts are similarly cleaned. Spot prime paint after repairs.

H. Shop Primed Steel Surfaces: Sand and scrape to remove loose primer and rust. Feather edges to make touch-up patches inconspicuous. Clean surfaces with solvent. Prime bare steel surfaces. Prime metal items including shop primed items.

I. Metal Doors Scheduled for Painting: Prime metal door top and bottom edge surfaces

J. Wood/Wood doors: Clean surfaces of dirt, oil, and other foreign substances with scrapers, mineral spirits, and sandpaper, as required. Sand surfaces exposed to view smooth and dust off.

a. Scrape and clean small, dry, seasoned knots, and apply a thin coat of white shellac or other recommended knot sealer before applying primer. After priming, fill holes and imperfections in finish surfaces with putty or plastic wood filler. Sand smooth when dried.
b. Prime, stain, or seal wood to be painted immediately on delivery. Prime edges, ends, faces, undersides, and back sides of wood, including cabinets, counters, cases, and paneling.
c. If transparent finish is required, backprime with spar varnish.
d. Backprime paneling on interior partitions where masonry, plaster, or other wet wall construction occurs on backside.
e. Seal tops, bottoms, and cutouts of unprimed wood doors with a heavy coat of varnish or sealer immediately on delivery.

3.4 EXISTING WORK

A. Extend existing paint and coatings installations using materials and methods compatible with existing installations and as specified.

3.5 APPLICATIONS

A. Apply each coat at proper consistency.

B. Each coat of paint is to be slightly darker than preceding coat unless otherwise approved by Architect/Engineer.

C. Sand lightly between coats to achieve required finish.

D. Do not apply finishes on surfaces that are not sufficiently dry.

E. Allow each coat of finish to dry before following coat is applied, unless directed otherwise by manufacturer.

F. Prime top and bottom edges of metal doors with enamel undercoat when they are to be painted.

3.6 EXTERIOR AND INTERIOR PAINTING

A. The work includes surface preparation, painting and finishing of interior and exterior exposed items and surfaces throughout the project, except as otherwise indicated. Surface preparation, priming, and coats of paint specified are in addition to shop priming and surface treatment specified under other sections of the work.

B. Paint all exposed surfaces whether or not colors are designed in schedules, except where the natural finish of the material is specifically noted as a surface not to be painted. Where items or surfaces are not specifically mentioned, paint these the same as adjacent similar materials or areas. If color of finish is not designated, the

Architect/Engineer will select these from standard colors available for the material systems specified.

3.7 PAINT SCHEDULE

1. Exterior Plastered Walls:
   a. One Coat
      1) SW Loxon Concrete & Masonry Primer/Sealer or approved equal
   b. Two Coats
      1) SW Superpaint Exterior Acrylic Latex Flat Paint or approved equal
2. Interior Walls:
   a. One Coat
      1) SW General Purpose Interior Primer or approved equal
   b. Two Coats
      1) SW Superpaint Exterior Flat Paint or approved equal
3. Exterior Galvanized Metals, Metal Doors and Structural Steel Columns:
   a. One Coat
      1) SW All Surface Enamel Oil Primer or approved equal.
   b. Two Coats
      1) SW Industrial Enamel Protective & Marine Coating.
4. Exterior Structural Joists and Metal Roofs:
   a. Two Coats
      1) Dryfall Coating

3.8 MECHANICAL AND ELECTRICAL EQUIPMENT

A. Refer to mechanical and electrical Sections with respect to identification banding of equipment, ducting, piping and conduit.

B. Remove grilles, covers, and access panels for mechanical and electrical systems from location and paint separately.

C. Finish paint primed equipment to color selected.

D. Prime and paint insulated and bare pipes, conduits, boxes, insulated and bare ducts, hangers, brackets, collars and supports, except where items are plated or covered with a pre-finished coating.

E. Replace identification markings on mechanical or electrical equipment when painted over or spattered.

F. Paint interior surfaces of air ducts, convector and baseboard heating cabinets that are visible through grilles and louvers with one coat of flat black paint, to limit of sight line. Paint dampers exposed immediately behind louvers, grilles, convector and baseboard cabinets to match face panels.

G. Paint exposed conduit and electrical equipment occurring in finished areas. Color and texture to match adjacent surfaces.

H. Paint both sides and edges of plywood backboards for electrical equipment before installing backboards and mounting equipment on them.

I. Color code equipment, piping, conduit and exposed ductwork in accordance with requirements indicated. Color banding and identification (flow arrows, naming, numbering, etc.)

3.9 PAINTING NOT INCLUDED

A. Shop Priming: Unless otherwise specified, shop priming of ferrous metal items is included under the various sections for structural steel, miscellaneous metals, hollow metal work, and fabricated components. Touch-up of damaged primed surfaces is included in the painting work.

B. Prefinished Items: Do not include painting when factory-finishing is specified, except all roof mounted prefinished mechanical equipment is to be field-painted.

C. Concealed Surfaces: Painting is not required on surfaces such as walls or ceilings in concealed areas and generally inaccessible areas, foundation spaces, furred areas, utility tunnels.

D. Finish Metal Surfaces: Architectural metal surfaces of anodized aluminum, stainless steel, chromium plate, copper, bronze, and similar finished materials will not require finish painting.

E. Operating Parts and Labels: Moving parts of operating units, mechanical and electrical parts, such as valve and damper operations, linkages, sinkages, sensing devices, motor and fan shafts will not require finish painting, unless otherwise indicated. Do not paint over any code-required labels, such as Underwriters' Laboratories and Factory Mutual, or any equipment identification, performance rating, name or nomenclature plates.

3.10 CLEANING

A. As work proceeds and upon completion, promptly remove paint where spilled, splashed, or spattered.

B. During progress of work keep premises free from any unnecessary accumulation of tools, equipment, surplus materials, and debris.

C. Upon completion of work leave premises neat and clean, to the satisfaction of Architect/Engineer.

END OF SECTION

SECTION 23 34 00
EXHAUST FAN CAPS

PART 1 – GENERAL

1.1 DESCRIPTION

A. Curb Mounted Exhaust Fan and Exhaust Fan Cover

1.2 RELATED WORK

A. Section 01 GENERAL REQUIREMENTS.
B. Section 01 SHOP DRAWINGS, PRODUCT DATA, and SAMPLES.
C. SECTION 07 52 19- MODIFIED BITUMEN SHEET ROOFING

1.3 SUBMITTALS

A. Submittals, including number of required copies, shall be submitted in accordance with Section 01340, SHOP DRAWINGS, PRODUCT DATA, AND SAMPLES.
B. Manufacturers Literature and Data Including: Full item description and optional features and accessories. Include dimensions, weights, materials, applications, standard compliance, model numbers, size, and capacity.

C. Shop Drawings: Show fabrication and installation details for metal components.

1. Penetrations through fire-rated and other partitions.
2. Accessories, including bolts and other premanufactured items.

1.4 QUALITY ASSURANCE

A. Corrosion Protection:
1. When applicable, any steel shall be stainless steel or steel mill-galvanized, or phosphatized and coated with minimum two coats, corrosion resistant enamel paint. Manufacturer’s paint and paint system shall meet the minimum requirements of ASTM D1735 water fog, ASTM B117 salt spray, ASTM D3359 adhesion, and ASTM G152 and ASTM G153 for carbon arc light apparatus for exposure of non-metallic material.

PART 2 – PRODUCTS

2.1 Construction: All exhaust fans and covers shall be all-aluminum construction. The exhaust fan shall be equipped with gravity self-acting back draft damper to be installed flush with face of curb.

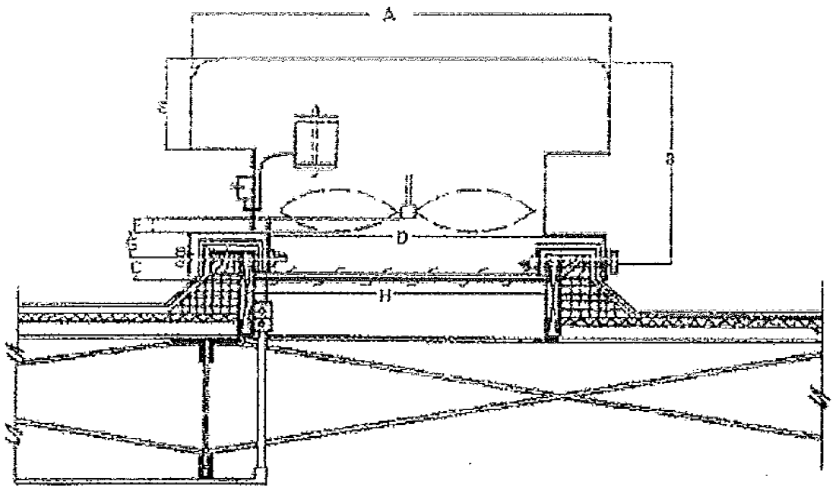

Fan Size	A	B	C	D	E	F	G	H
36"	64 ½"	37"	2 ½"	40 ½"	15"	7 ½"	14 ½"	37"

2.2. Motor:

a. The fan motor power supply must be feed through a liquid tight flexible conduit (3 wire).

b. The fan motor power supply at the building roof must be controlled by a 30A-2P-3W-S/N-240VAC, NMA 3R unfussed disconnect.

Motor Model	HP	Volt	RPM	Hz	PH	Code	AMD
**5KC47UG694 (ball bearing)	1 hp	115 / 230V	1,725rpm	60Hz	1	*K	40°C

*K=Totally enclosed

2.3. Heater and starter specifications: The contractor shall furnish the motor starting switch complete with heater. Heater size shall be equal or similar to Cutler Hammer cat. # 9101-M74. Continuous rated motors with a service factor of 1.15 to 1.25, select a heater from the heater table. For continuous rated motors with a service factor of 1 multiply the

motor full load current by 0.9 and use this value to select the heater. Starter tripping current in 40C ambient is the minimum value of full load current multiplied by 1.25.

Heater for CR101Y
Heater Amperage Based on 90°C Wire

Motor Full Load Amperes	Heater Number CR123	Motor Full Load Amperes	Heater Number CR123
.44-.49	H005A	3.02-3.27	H377A
.49-.53	H061A	3.28-3.56	H410A
.54-.58	H067A	3.57-3.88	H446A
.59-.65	H074A	3.89-4.22	H486A
.66-.71	H082A	4.23-4.60	H529A
.72-.78	H090A	4.61-5	H575A
.79-.86	H099A	5.01-5.43	H625A
.87-.95	H108A	5.44-5.90	H680A
.96-1.04	H120A	5.91-6.41	H739A
1.05-1.14	H132A	6.42-6.98	H802A
1.15-1.25	H144A	6.99-7.6	H873A
1.26-1.37	H158A	7.61-8.25	H950A
1.38-1.49	H172A	8.26-8.95	H103B
1.5-1.63	H188A	8.96-9.75	H112B
1.64-1.78	H205A	9.76-10.6	H122B
1.79-1.95	H224A	10.7-11.4	H132B
1.96-2.13	H245A	11.5-12.5	H144B
2.14-2.32	H267A	12.6-13.6	H157B
2.33-2.53	H291A	13.7-14.8	H171B
2.54-2.76	H317A	14.9-16	H186B
2.77-3.01	H346A		

2.2 SEALANT MATERIALS

B. Joint and Seam Tape: 2 inches wide; glass-fiber-reinforced fabric.

C. Tape Sealing System: Woven-fiber tape impregnated with gypsum mineral compound and modified acrylic/silicone activator to react exothermically with tape to form hard, durable, airtight seal.

D. Water-Based Joint and Seam Sealant: Flexible, adhesive sealant, resistant to UV light when cured, UL 723 listed, and complying with NFPA requirements for Class 1 ducts.

E. Solvent-Based Joint and Seam Sealant: One-part, nonsag, solvent-release-curing, polymerized butyl sealant formulated with a minimum of 75 percent solids.

F. Flanged Joint Mastic: One-part, acid-curing, silicone, elastomeric joint sealant complying with ASTM C 920, Type S, Grade NS, Class 25, Use O.

G. Flange Gaskets: Butyl rubber or EPDM polymer with polyisobutylene plasticizer.

2.3 SUPPORTS

A. Building Attachments: Concrete inserts fasteners, or structural-steel fasteners appropriate for construction materials to which anchoring are being attached as specified on drawings.

1. Use fasteners for standard-weight aggregate concretes or for slabs more than 4 inches thick.

2. Exception: Do not use power-actuated concrete fasteners for lightweight-aggregate concretes or for slabs less than 4 inches thick.

B. Anchoring cabling: Vinyl coated ¼" Stainless Steel Type 316 Cable.

C. Turnbuckles & Eye Hooks: Stainless Steel Type 316

PART 3 - EXECUTION

3.1 INSTALLATION

A. Aluminum side panels and hood must be bolted to the exhaust fan base with screws, nuts and pressure washers, The contractor must use min. two screws, nuts and pressure washers on each side of the exhaust fan – screw dimensions are 8" x 3/4".

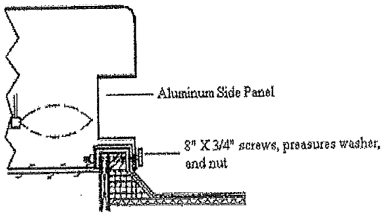

B. Fan must be mounted on heavy gage flange inside of side panels, the contractor must balance the motor pulley with fan pulley. The motor must be statically mounted on vibration absorbing bushings, and the drive belt must be tightening adequately.

C. Install exhaust fan in accordance with manufacturer's instructions.

D. Align components true and straight.

D. Attach equipment to curbs with mechanical bolts as specified.

END OF SECTION

SECTION 32 31 13
CHAIN LINK FENCE AND GATES

PART 1 – GENERAL

1.1 RELATED DOCUMENTS

A. DIVISION 01 - GENERAL REQUIREMENTS: Drawings, quality, product and performance requirements, general and supplemental conditions apply as applicable to the project and project documents.

1.2 SUMMARY

A. This Section includes industrial/commercial chain link fence and gates specifications:
   1. Galvanized steel coated chain link fabric
   2. Galvanized steel framework and fittings
   3. Gates: swing
   4. Barbed wire
   5. Installation
B. Related Sections:
   1. 01340 Shop Drawings, product data
   2. 03300 Cast in Place Concrete

1.3 REFERENCES

A. ASTM A121 Specification for Metallic-Coated Carbon Steel Barbed Wire

B. ASTM A392 Specification for Zinc-Coated Steel Chain-Link Fence Fabric

C. ASTM A780 Standard Practice for Repair of Damaged and Uncoated Areas of Hot-Dip Galvanized Coatings

D. ASTM F552 Standard Terminology Relating to Chain Link Fencing

F. ASTM F567 Standard Practice for Installation of Chain Link Fence

G. ASTM F626 Specification for Fence Fittings

H. ASTM F900 Specification for Industrial and Commercial Swing Gates

I. ASTM F1043 Specification for Strength and Protective Coatings of Steel Industrial Chain Link Fence Framework

J. ASTM F1083 Specification for Pipe, Steel, Hot-Dipped Zinc-Coated (Galvanized) Welded, for Fence Structures

1.4 SUBMITTALS

A. Product Data:

1. Material List of items proposed to be provided under this Section.

2. Shop drawings: Site plan showing layout of fence location with dimensions, location of gates and opening size, cleared area, elevation of fence, gates, footings and details of attachments. Comply with the provisions of Section 01.

3. Manufacturer's data including recommended installation procedures which, when approved by the Architect or Engineer, will become the basis for accepting or rejecting actual installation procedures used on the Work.

1.5 QUALITY ASSURANCE

A. Use adequate numbers of skilled workmen who are thoroughly trained ana experienced in the necessary.
crafts and who are completely familiar with the
specified requirements and the methods needed for proper performance of the work of this Section.

PART 2 – PRODUCTS

2.1 DIMENSIONAL DATA

A. General:

1. Pipe size indicated are commercial pipe sizes.
2. Tube sizes indicated are nominal outside dimensions.
3. H-section sizes indicated are normal flange dimensions.
4. Roll-formed section sizes indicated are the nominal outside dimensions.

2.2 GALVANIZING

A. On steel framework and appurtenances, provide galvanized finish with not less than the following weight of zinc per sq ft.

1. Pipe: 1.8 oz, complying with ASTM A120.
2. H-sections and square tubing: 2.0 oz, complying with ASTM A123.
3. Hardware and accessories: Comply with Table I of ASTM AL53.
4. Fabric: 1.2 0z. min., complying with class I of ASTMA392-84.
5. Galvanizing of steel wire may be after or before woven.

2.3 FABRIC

A. Provide number 9 gage (steel wire gage) zinc costed fence fabric in 2" diamond mesh, with top and bottom selvages twisted and barbed, 1.2 02 galv., class 1 coating in accordance with ASTM A392-84.

B. Provide fabric in one piece widths.

2.4 POSTS, RAILS, AND ASSOCIATED ITEMS

A. End, corner, slope, and pull posts: Provide at least the following minimum sizes and weights:

Material and dimensions:	Lbs per lin ft:
Pipe, 2.875 outside dimension:	5.79
Tubing, 2-1/2" square"	5.70
Roll-formed section, 3621/2" X 3-1/2"	5.14

B. Line posts: provide minimum sizes and weights as follows:

Material and dimension:	Lbs per lin ft:
Pipe, 2.375 outside dimension:	3.65
H-section, 2.25 x 1.95 x 0.143":	0.10

C. Gate posts: Provide gate posts for supporting single gate leaf, or one leaf of a double gate installation, for nominal gate widths as follows:

Material and dimension:	Lbs per lin ft:
Pipe, 4" outside dimension:	9.10
Tubing, 3” square:	9.10
H-section, 4":	14.00

1. Over 13 feet wide, and up to 20 feet wide: Use 6,625" outside diameter pipe weighing 18.97 lbs per linear ft.
2. Over 20 feet wide: Use 8.625" outside diameter pipe weighing 24.70 lps per linear ft.

D.Top rails:

1. Use 1.66" outside diameter pipe weighing 1.806 lbs per linear ft; or
2. Use 1.625" X 1.25" roll-formed sections weighing 1.35 lbs per linear ft.
3. Provide in manufacturer's longest lengths, with expansion type couplings approximately 6" Long for each joint.
4. Provide means for attaching top rail securely to each gate, corner, pull, slope, and end post.

E. Post brace assemblies:

1. Provide at end and gate posts, and at both sides of corner, SLOPE, and pull posts, with the horizontal brace located at mid-height of the fabric.
2. Use 1.66" outside diameter pipe weighing 1.35 lbs per linear ft for horizontal brace.
3. Use 3/8" diameter rod with turnbuckle for diagonal truss.

F. Tension wire: provide number 7 gage galvanized coiled spring wire at bottom of fabric.

G. Post tops:

1. Provide tops: galvanized steel, designed as weathertight closure Cap.
2. Provide one cap, for each post.

3. Provide caps with openings to permit trough passage of top rail.

H. Stretcher bars:

1. Provide one-piece lengths equal to full height of fabric, with a minimum cross-section of 3/16" X 3/4".
2. Provide on stretcher bar for each gate and end post and two for each corner, slope, and pull post, except where fabric is woven integrally into the post.

I. Stretcher bar bands:

1. Provide galvanized steel, spaced not over 15" on pull, centers, to secure stretcher bars to end, corner, slope, and gate posts.
2. Bands may be used also with special fittings for securing rails to end, corner, pull, slope, and gate posts.

2.5 GATES

A. General:

1. Fabricate gate perimeter frames of tubular members.
2. Provide additional horizontal and vertical members to assure proper operation of the gate, and for attachment of fabric, hardware, ana accessories.
3. Space so frame members are not more than 8 feet apart. 4. Fabricate gate frames from:

Material and dimensions:	Lbs per lin ft:
Pipe 1.66" outside diameter	1.806 (8’ or less width)
Pipe 1.90" outside diameter	2.72 (8’ or less width)

C. Fabrication:

1. Assemble gate frames by welding with special malleable or pressed steel fittings and rivets for rigid connections.
2. Use same fabric as used in the fence.
3. Install fabric with stretcher bars at vertical edges as a minimum.
4. Attach stretchers to gate frame at not more than 15" on centers.
5. Attach hardware with rivets or by other means which will provide security against removal and breakage.
6. Provide diagonal cross-bracing consisting of 3/8" diameter adjustable length truss rods on gates where required to provide frame rigidity without sag or twist.

D. Gate hardware: provide Following for each gate:

1. Hinges:
   a. Pressed Hot-Dip galvanized steel to suit the gate size; non-lift-off type.
2. Latches:
   a. Provide forked type to permit operation from either side of the gate.
   b. Provide padlock eye as integral part of latch.
3. Keeper: . provide keeper for vehicle gates, which automatically engages the gate leaf and holds it in the open position until manually released.

4. Double gates:
a. Provide gate stops for double gates consisting of mushroom or flush plate, with anchors.
b. Set in concrete to engage the center drop rod or plunger bar.
c. Provide locking device and padlock eyes as an integral part of the latch, requiring one padlock
for locking both gate leaves.

2.6 MISCELLANEOUS MATERIALS AND ACCESSORIES

A. Wire ties:

1. For tying fabric to line posts, use number 9 gage wire ties spaced 12" on centers.
2. For tying fabric to rails and braces, use number 9 gage wire ties spaced 24" on centers.
3. For tying fabric to tension wire, Use number 11 gage hog rings spaced 294"on centers.
4. Manufacturer's standard wire ties will be acceptable Lf of equal strength and durability.

B. Concrete: Comply with pertinent provisions for concrete for 2500 psi concrete.

PART 3 EXECUTION

3.1 SURFACE CONDITIONS

A. Examine the areas and conditions under which work of this Section will be performed. Correct Conditions detrimental to timely and proper completion of the Work. Do not proceed until unsatisfactory conditions are corrected.

3.2 INSTALLATION

A. General:

1. Install posts at a maximum spacing of 10 feet on centers.
2. Install corner or slope posts where changes in line or grade exceed a 30 degree deflection.

B. Excavating:

1. Drill holes for post footings in firm, undisturbed or compacted soil, strictly adhering to the dimensions and spacing shown.
2. Post hole dimensions:
   a. Provide 30" deep by 8" diameter foundations for line posts for 5 foot fabric height and less.
   b. Provide 30" deep by 8" diameter foundations for line posts for fabric heights exceeding 5 feet.
   c. Provide 36" deep by 12" diameter foundations for all other posts.
3. Spread soil from excavations uniformly adjacent to the fence line, Or On adjacent areas of the site if so directed.

4. When solid rock is encountered near the surface, drill into rock at least 12" for line posts and at least 18" for end, pull, gate, and corner posts. Drill hole at least 1" greater diameter than the largest dimension of the post to be placed.
5. If solid rock is below soil overburden, drill to full depth required, except penetration into rock need not exceed minimum depths specified above.

C. Setting posts:

1. Remove loose and foreign materials from sides and bottoms of holes, and moisten soil prior to placing concrete.
2. Center and align posts in holes.
3. Place concrete around posts in a continuous pour, and vibrate or tamp for consolidation.
4. Check each post for vertical and top alignment, and hold in position during placement and finishing operations.
5. Trowel tops of footings, and slope oF dome to direct water away from posts.
6. Extend footings for gate posts to the underside of bottom hinge.
7. Set keeps, stops, sleeves, and other accessories into concrete as required.
8. Keep exposed concrete surfaces moist for at least seven days after placement, of cure with membrane curing material or other curing method approved by the Architect.
9. Grout-in those posts which are set into sleeved holes, concrete constructions, of rock excavations, using no shrink Portland cement grout or other grouting material approved by the Architect.

D. Concrete strength:

1. Allow concrete to attain at least 75%of its minimum 28-day strength before rails, tension wires, and/or fabric is installed.
2. Do not, in any Case, install such items in less than seven days after placement of concrete.
3. Do not stretch and tension fabric and wire, and do not hang gates, until concrete has attained its full design strength.

E. Rails and bracing:

1. Install fence with a top vail and bottom tension wire.
2. Install top rails continuously through post caps of extension arms, bending to radius for curved runs.
3. Provide expansion couplings as recommended by the fencing manufacturer.
4. Provide bracing to the midpoint of the nearest line post or posts at all end, corner, slope, pull, and gate posts.
5. Install tension wires parallel to the line of fabric by weaving through the fabric, and tying to each post with not less than number 6 gage galvanized wire, or by securing the wire to the fabric.

F. Installing fabric:

1. Leave approximately 2" between finish grade and bottom selvage.
2. Excavate high points in the ground to clear the bottom of the fence.
3. Place and compact fill to within 1" of the bottom of the fabric in depressions.
4. Pull fabric taut ana tie to posts, rails, and tension wires.

5. Install fabric on outward side facing side of fence and anchor to framework so that the fabric remains in tension after pulling force is removed.
6. Install stretcher bars by threading through or clamping to fabric on 4" centers, and secure to posts with metal bands spaced 15" on centers.

G. Installing gates:

1. Install gates plumb, level, and secure for full opening without interference.
2. Install ground-set items in concrete for anchorage in accordance with the fence manufacturer's recommendations as approved by the Architect.
3. Lubricate and adjust the hardware for smooth operations.

H. Miscellaneous:

1. Use U-shaped tie wires, conforming to diameter of pipe to which attached, clasping pipe and fabric firmly with ends twisted at least two full turns.
2. Bend ends of wire to minimize hazards to persons and clothing.
3. Fasteners:
    a. Install nuts for tension band and hardware bolts on side of fence opposite fabric side.
    b. Peen the ends of bolts to prevent removal of nuts.
4. Repair coatings damaged in the shop or field erection, using a hot-applied repair compound applied in accordance with its manufacturer's recommendations as approved by the Architect.

END OF SECTION