Sabre Industries™
INNOVATION DELIVERED

Structural Design Report

697' 7200STRG Guyed Tower
Site: Cayey, PR

Prepared for: PUERTO RICO PUBLIC BROADCASTING CORPORATION
by: Sabre Industries ™

Job Number: 475187

February 1, 2023

Tower Profile..... 1

Foundation Design Summary..... 2-3

Calculations..... 4-95

I, Andrew T. Haldane, Lic. # 23835, certify that I am the professional who designed these plans and the complementary specifications. Also, I certify that I understand that said plans and specifications comply with the applicable provisions of the Joint Regulations and the applicable provisions of the Regulations and Building Codes in force of the Agencies, Regulatory Boards or Public Corporations with jurisdiction. I further certify that the preparation of these plans and specifications has fully complied with the provisions of Act No. 14 of January 8, 2004, as amended, known as the "Law for Investment by the Puerto Rican Industry." and with [Act No. 319 of May 15, 1938, as amended; Act No. 96 of July 6, 1978, as amended; as applicable]. I acknowledge that any false statement or falsification of facts that has been produced by ignorance or negligence either by me, my agents or employees, or by others with my knowledge, makes me responsible for any judicial and disciplinary action by the OGPe.



Electronic Copy

TOWER ENGINEERING PROFESSIONALS

COLEGIO DE INGENIEROS Y AGRIMENSORES
DE PUERTO RICO

PO Box 363845 San Juan Puerto Rico 00936-3845
Tel. 787.758.2250 #205 · practica@ciapr.org

ESTAMPILLA DIGITAL ESPECIAL (EDE)

Ing. Andrew T. Haldane , PE

$6

7387-6541-5056-5169

ANDREW T. HALDANE
INGENIERO
LICENCIADO
LIC.23835
EXPIRA
21 FEB 23
PUERTO RICO

Electronic Copy

Práctica de:	Ingeniería
Licencia:	23835
Renglón:	Documento
Descripción del Trabajo:	Diseño en Ingeniería
Fecha de Emisión:	02/02/2023
Monto Emitido:	$6
Número de Serie:	7387-6541-5056-5169
Número de Caso:	TEP No.328179.820004
Proyecto / Unidad:	Cayey PR (475187)
Rol del Profesional:	Analista

Certificación:

El profesional certifica con la emisión de la estampilla digital especial del Colegio de Ingenieros y Agrimensores de Puerto Rico el haber cumplido con las disposiciones de la Sección 11 de la Ley 319 del 15 de mayo de 1938, según enmendada.

La colocación del sello profesional constituye la cancelación de la estampilla digital especial

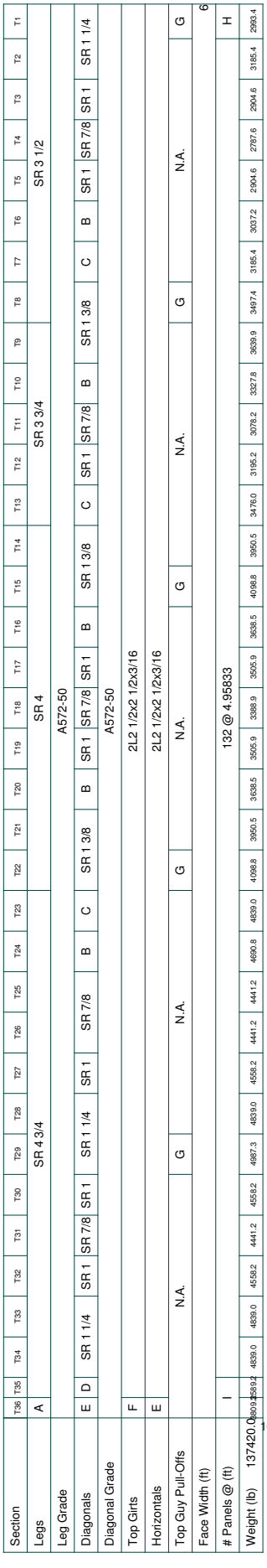

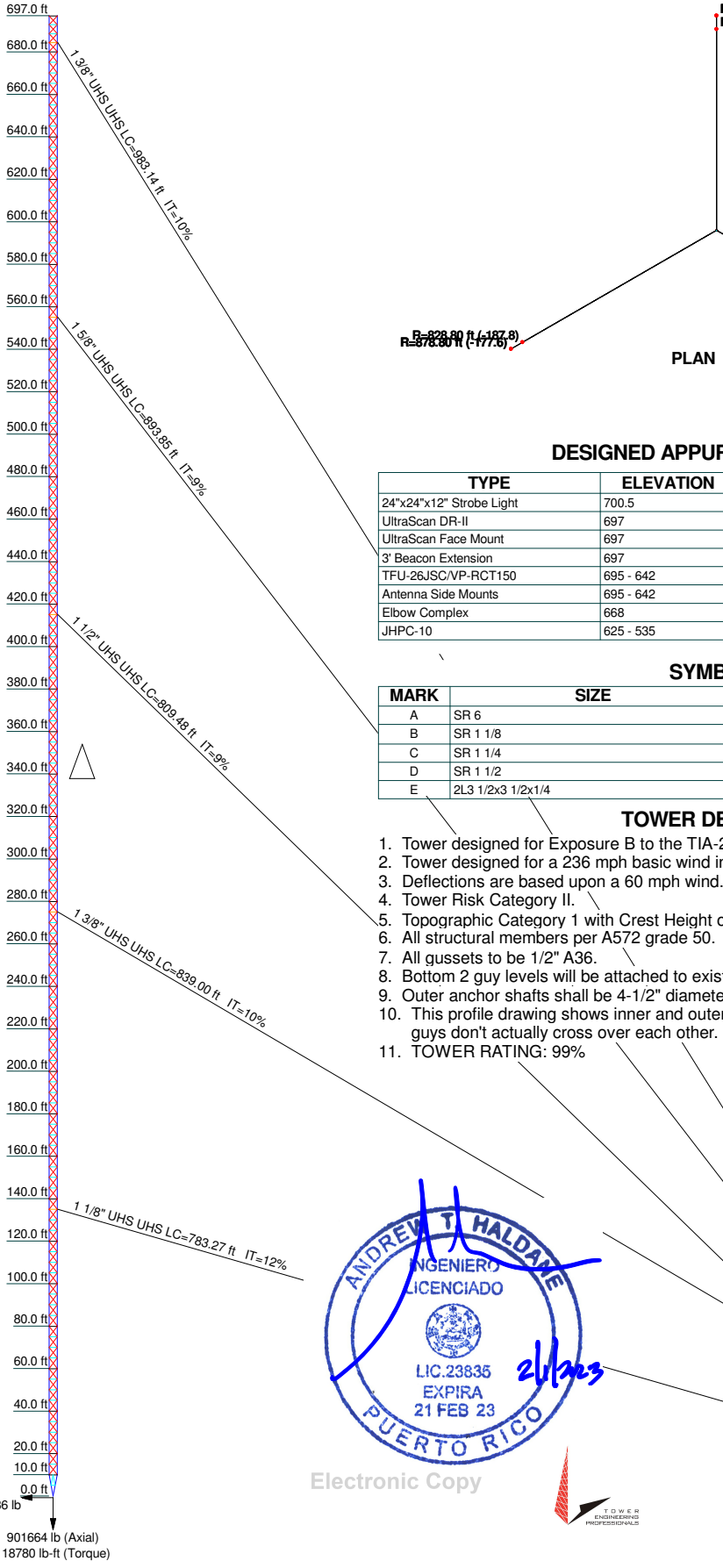

PLAN

DESIGNED APPURTENANCE LOADING

TYPE	ELEVATION	TYPE	ELEVATION
24"x24"x12" Strobe Light	700.5	Elbow Complex	580
UltraScan DR-II	697	Antenna Side Mounts	525 - 472
UltraScan Face Mount	697	TFU-26JSC/VP-RCT150	525 - 472
3' Beacon Extension	697	Elbow Complex	498
TFU-26JSC/VP-RCT150	695 - 642	(2) 24"x24"x12" Strobe Light	351 - 350
Antenna Side Mounts	695 - 642	HP6-65	350
Elbow Complex	668	HP6-65	100
JHPC-10	625 - 535		

SYMBOL LIST

MARK	SIZE	MARK	SIZE
A	SR 6	F	2L4x4x5/16
B	SR 1 1/8	G	2L3x3x3/8
C	SR 1 1/4	H	4 @ 4.20833
D	SR 1 1/2	I	4 @ 4.91667
E	2L3 1/2x3 1/2x1/4		

TOWER DESIGN NOTES

1. Tower designed for Exposure B to the TIA-222-H Standard.
2. Tower designed for a 236 mph basic wind in accordance with the TIA-222-H Standard.
3. Deflections are based upon a 60 mph wind.
4. Tower Risk Category II.
5. Topographic Category 1 with Crest Height of 0.00 ft
6. All structural members per A572 grade 50.
7. All gussets to be 1/2" A36.
8. Bottom 2 guy levels will be attached to existing inner anchor foundations.
9. Outer anchor shafts shall be 4-1/2" diameter solid round, A572 grade 50.
10. This profile drawing shows inner and outer anchor distances for different directions. The guys don't actually cross over each other.
11. TOWER RATING: 99%

Electronic Copy

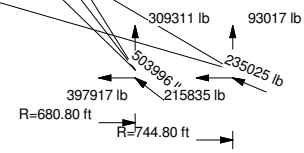

ALL REACTIONS ARE FACTORED

Sabre Industries 7101 Southbridge Drive Sioux City, IA 51111 Phone: (712) 258-6690 FAX:	Job: *475187*			
	Project: *Cayey, PR*			
	Client: Corporacion de Puerto Rico Para la Difusion Public	Drawn by: kjtindall	App'd:	
	Code: TIA-222-H	Date: 02/01/23	Scale: NTS	
	Path: F:\Tower Eng. Data Files\Sabre Order Files\470000 Jobs\475000\475187\475187.eri		Dwg No. E-1	

No.: 475187
Date: 02/01/2023
By: KJT

Customer: Corporacion de Puerto Rico Para la Difusion Public
Site: Cayey, PR
697' model 7200 STRG Guyed Tower (72" face)

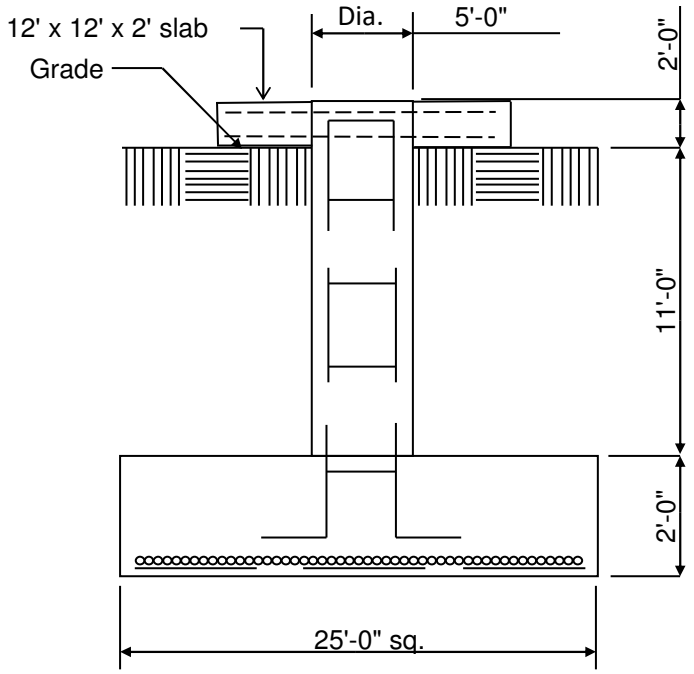

TOWER BASE
(65.0 Cu. Yds.)
(NOT TO SCALE)

Rebar Schedule	
Pier	(20) #8 vertical rebar w/ #3 ties @12" spacing
Pad	(32) #8 horizontal rebar each way, evenly spaced, bottom only
Top Slab	(14) #5 horiz. rebar evenly spaced ea. way top and bot. (56 total)

Notes

1) Concrete shall have a minimum 28-day compressive strength of 4,500 psi, in accordance with ACI 318-14.
2) Rebar to conform to ASTM specification A615 Grade 60.
3) All rebar to have a minimum of 3" concrete cover.
4) All exposed concrete corners to be chamfered 3/4".
5) The foundation design is based on the geotechnical report by Super Foundation Specialist, Corp., Job No. E-646, dated January 25, 2023.
6) See the geotechnical report for compaction requirements, if specified.

ANDREW J. HALDANE
INGENIERO
LICENCIADO
LIC.23835
EXPIRA
21 FEB 23
PUERTO RICO
21/2/2023

Electronic Copy

Information contained herein is the sole property of Sabre Industries, constitutes a trade secret as defined by Iowa Code Ch. 550 and shall not be reproduced, copied or used in whole or part for any purpose whatsoever without the prior written consent of Sabre Industries.

7101 Southbridge Drive - P.O. Box 658 - Sioux City, IA 51102-0658 - Phone 712.258.6690 - Fax 712.279.0814

No.: 475187
Date: 02/01/2023
By: KJT

Customer: Corporacion de Puerto Rico Para la Difusion Public
Site: Cayey, PR
697' model 7200 STRG Guyed Tower (72" face)

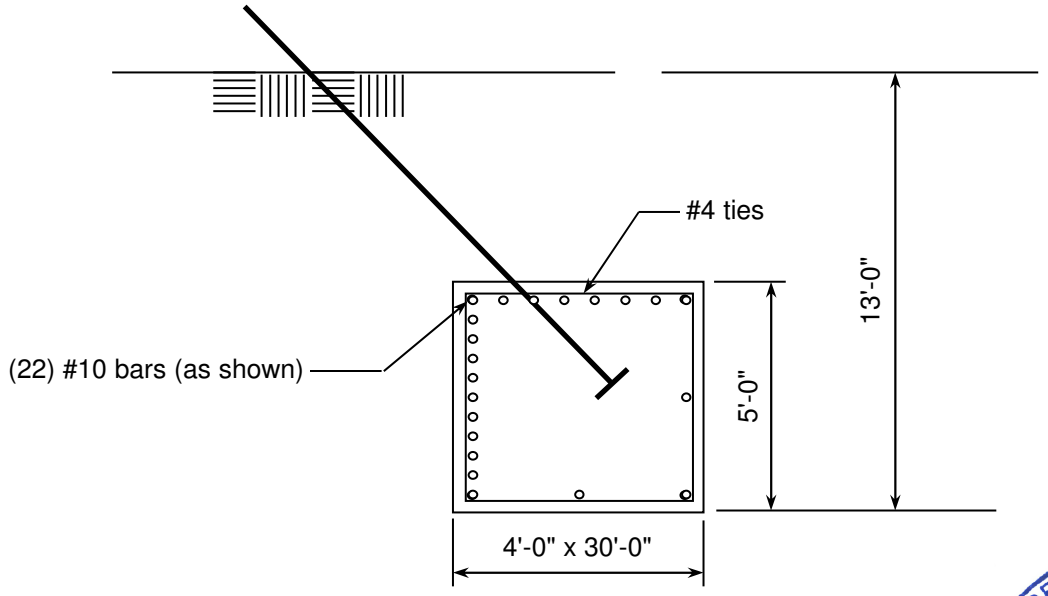

OUTER GUY ANCHOR
(22.22 Cu. Yds. Each)
(3 REQUIRED; NOT TO SCALE)

Rebar Schedule Per Anchor	
Guy Anchor	(22) #10 horizontal rebar x 29'-6"
	(47) #4 ties evenly spaced

ANDREW T. HALDANE
INGENIERO
LICENCIADO
LIC.23835
EXPIRA
21 FEB 23
PUERTO RICO
21/Feb/23

Electronic Copy

Notes

1) Concrete shall have a minimum 28-day compressive strength of 4,500 psi, in accordance with ACI 318-14.
2) Rebar to conform to ASTM specification A615 Grade 60.
3) All rebar to have a minimum of 3" concrete cover.
4) The foundation design is based on the geotechnical report by Super Foundation Specialist, Corp., Job No. E-646, dated January 25, 2023.
5) When the soil electrical resistivity is less than 50 ohm-m and/or the measured soil pH values are below 3 or greater than 9, additional corrosion control is required. See the geotechnical report for these parameters and compaction requirements, if specified.

Information contained herein is the sole property of Sabre Industries, constitutes a trade secret as defined by Iowa Code Ch. 550 and shall not be reproduced, copied or used in whole or part for any purpose whatsoever without the prior written consent of Sabre Industries.

7101 Southbridge Drive - P.O. Box 658 - Sioux City, IA 51102-0658 - Phone 712.258.6690 - Fax 712.279.0814

Tower Input Data

The main tower is a 3x guyed tower with an overall height of 697.00 ft above the ground line.
The base of the tower is set at an elevation of 0.00 ft above the ground line.
The face width of the tower is 6.00 ft at the top and tapered at the base.
This tower is designed using the TIA-222-H standard.
The following design criteria apply:

Tower base elevation above sea level: 2948.00 ft.
Basic wind speed of 236 mph.
Risk Category II.
Exposure Category B.
Simplified Topographic Factor Procedure for wind speed-up calculations is used.
Topographic Category: 1.
Crest Height: 0.00 ft.
Deflections calculated using a wind speed of 60 mph.
All structural members per A572 grade 50..
All gussets to be 1/2" A36..
This profile drawing shows inner and outer anchor distances for different directions. The guys don't actually cross over each other..
Tension only take-up is 0.0313 in.
Pressures are calculated at each section.
Stress ratio used in tower member design is 1.
Safety factor used in guy design is 1.
Local bending stresses due to climbing loads, feed line supports, and appurtenance mounts are not considered.

Options

√ Consider Moments - Legs	Distribute Leg Loads As Uniform	Use ASCE 10 X-Brace Ly Rules
Consider Moments - Horizontals	Assume Legs Pinned	√ Calculate Redundant Bracing Forces
Consider Moments - Diagonals	√ Assume Rigid Index Plate	Ignore Redundant Members in FEA
Use Moment Magnification	√ Use Clear Spans For Wind Area	SR Leg Bolts Resist Compression
√ Use Code Stress Ratios	√ Use Clear Spans For KL/r	√ All Leg Panels Have Same Allowable
√ Use Code Safety Factors - Guys	√ Retension Guys To Initial Tension	Offset Girt At Foundation
Escalate Ice	√ Bypass Mast Stability Checks	√ Consider Feed Line Torque
Always Use Max Kz	√ Use Azimuth Dish Coefficients	√ Include Angle Block Shear Check
Use Special Wind Profile	√ Project Wind Area of Appurt.	Use TIA-222-H Bracing Resist. Exemption
√ Include Bolts In Member Capacity	√ Autocalc Torque Arm Areas	Use TIA-222-H Tension Splice Exemption
Leg Bolts Are At Top Of Section	Add IBC .6D+W Combination	Poles
√ Secondary Horizontal Braces Leg	Sort Capacity Reports By Component	Include Shear-Torsion Interaction
Use Diamond Inner Bracing (4 Sided)	Triangulate Diamond Inner Bracing	Always Use Sub-Critical Flow
SR Members Have Cut Ends	Treat Feed Line Bundles As Cylinder	Use Top Mounted Sockets
SR Members Are Concentric	Ignore KL/ry For 60 Deg. Angle Legs	Pole Without Linear Attachments
		Pole With Shroud Or No Appurtenances
		Outside and Inside Corner Radii Are Known

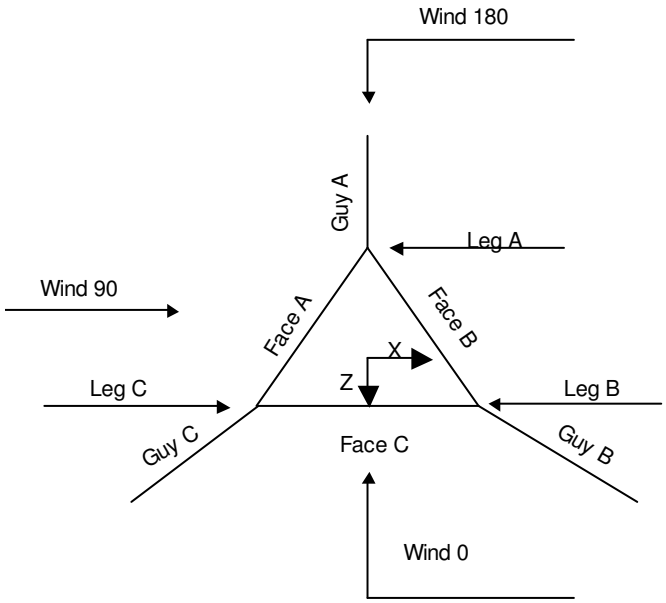

Corner & Starmount Guyed Tower

Tower Section Geometry

Tower Section	*Tower Elevation*	*Assembly Database*	*Description*	*Section Width*	*Number of Sections*	*Section Length*
	ft			*ft*		*ft*
T1	697.00-680.00			6.00	1	17.00
T2	680.00-660.00			6.00	1	20.00
T3	660.00-640.00			6.00	1	20.00
T4	640.00-620.00			6.00	1	20.00
T5	620.00-600.00			6.00	1	20.00
T6	600.00-580.00			6.00	1	20.00
T7	580.00-560.00			6.00	1	20.00
T8	560.00-540.00			6.00	1	20.00
T9	540.00-520.00			6.00	1	20.00
T10	520.00-500.00			6.00	1	20.00
T11	500.00-480.00			6.00	1	20.00
T12	480.00-460.00			6.00	1	20.00
T13	460.00-440.00			6.00	1	20.00
T14	440.00-420.00			6.00	1	20.00
T15	420.00-400.00			6.00	1	20.00
T16	400.00-380.00			6.00	1	20.00
T17	380.00-360.00			6.00	1	20.00
T18	360.00-340.00			6.00	1	20.00
T19	340.00-320.00			6.00	1	20.00
T20	320.00-300.00			6.00	1	20.00
T21	300.00-280.00			6.00	1	20.00
T22	280.00-260.00			6.00	1	20.00

Tower Section	Tower Elevation ft	Assembly Database	Description	Section Width ft	Number of Sections	Section Length ft
T23	260.00-240.00			6.00	1	20.00
T24	240.00-220.00			6.00	1	20.00
T25	220.00-200.00			6.00	1	20.00
T26	200.00-180.00			6.00	1	20.00
T27	180.00-160.00			6.00	1	20.00
T28	160.00-140.00			6.00	1	20.00
T29	140.00-120.00			6.00	1	20.00
T30	120.00-100.00			6.00	1	20.00
T31	100.00-80.00			6.00	1	20.00
T32	80.00-60.00			6.00	1	20.00
T33	60.00-40.00			6.00	1	20.00
T34	40.00-20.00			6.00	1	20.00
T35	20.00-10.00			6.00	1	10.00
T36	10.00-0.00			6.00	1	10.00

Tower Section Geometry *(cont'd)*

Tower Section	Tower Elevation ft	Diagonal Spacing ft	Bracing Type	Has K Brace End Panels	Has Horizontals	Top Girt Offset in	Bottom Girt Offset in
T1	697.00-680.00	4.21	TX Brace	No	Yes	1.0000	1.0000
T2	680.00-660.00	4.96	TX Brace	No	Yes	1.0000	1.0000
T3	660.00-640.00	4.96	TX Brace	No	Yes	1.0000	1.0000
T4	640.00-620.00	4.96	TX Brace	No	Yes	1.0000	1.0000
T5	620.00-600.00	4.96	TX Brace	No	Yes	1.0000	1.0000
T6	600.00-580.00	4.96	TX Brace	No	Yes	1.0000	1.0000
T7	580.00-560.00	4.96	TX Brace	No	Yes	1.0000	1.0000
T8	560.00-540.00	4.96	TX Brace	No	Yes	1.0000	1.0000
T9	540.00-520.00	4.96	TX Brace	No	Yes	1.0000	1.0000
T10	520.00-500.00	4.96	TX Brace	No	Yes	1.0000	1.0000
T11	500.00-480.00	4.96	TX Brace	No	Yes	1.0000	1.0000
T12	480.00-460.00	4.96	TX Brace	No	Yes	1.0000	1.0000
T13	460.00-440.00	4.96	TX Brace	No	Yes	1.0000	1.0000
T14	440.00-420.00	4.96	TX Brace	No	Yes	1.0000	1.0000
T15	420.00-400.00	4.96	TX Brace	No	Yes	1.0000	1.0000
T16	400.00-380.00	4.96	TX Brace	No	Yes	1.0000	1.0000
T17	380.00-360.00	4.96	TX Brace	No	Yes	1.0000	1.0000
T18	360.00-340.00	4.96	TX Brace	No	Yes	1.0000	1.0000
T19	340.00-320.00	4.96	TX Brace	No	Yes	1.0000	1.0000
T20	320.00-300.00	4.96	TX Brace	No	Yes	1.0000	1.0000
T21	300.00-280.00	4.96	TX Brace	No	Yes	1.0000	1.0000
T22	280.00-260.00	4.96	TX Brace	No	Yes	1.0000	1.0000
T23	260.00-240.00	4.96	TX Brace	No	Yes	1.0000	1.0000
T24	240.00-220.00	4.96	TX Brace	No	Yes	1.0000	1.0000
T25	220.00-200.00	4.96	TX Brace	No	Yes	1.0000	1.0000
T26	200.00-180.00	4.96	TX Brace	No	Yes	1.0000	1.0000
T27	180.00-160.00	4.96	TX Brace	No	Yes	1.0000	1.0000
T28	160.00-140.00	4.96	TX Brace	No	Yes	1.0000	1.0000
T29	140.00-120.00	4.96	TX Brace	No	Yes	1.0000	1.0000
T30	120.00-100.00	4.96	TX Brace	No	Yes	1.0000	1.0000
T31	100.00-80.00	4.96	TX Brace	No	Yes	1.0000	1.0000
T32	80.00-60.00	4.96	TX Brace	No	Yes	1.0000	1.0000
T33	60.00-40.00	4.96	TX Brace	No	Yes	1.0000	1.0000
T34	40.00-20.00	4.96	TX Brace	No	Yes	1.0000	1.0000

Tower Section	Tower Elevation ft	Diagonal Spacing ft	Bracing Type	Has K Brace End Panels	Has Horizontals	Top Girt Offset in	Bottom Girt Offset in
T35	20.00-10.00	4.92	TX Brace	No	Yes	1.0000	1.0000
T36	10.00-0.00	4.92	K Brace Down	No	Yes	1.0000	1.0000

Tower Section Geometry *(cont'd)*

Tower Elevation ft	Leg Type	Leg Size	Leg Grade	Diagonal Type	Diagonal Size	Diagonal Grade
T1 697.00-680.00	Solid Round	3 1/2	A572-50 (50 ksi)	Solid Round	1 1/4	A572-50 (50 ksi)
T2 680.00-660.00	Solid Round	3 1/2	A572-50 (50 ksi)	Solid Round	1 1/4	A572-50 (50 ksi)
T3 660.00-640.00	Solid Round	3 1/2	A572-50 (50 ksi)	Solid Round	1	A572-50 (50 ksi)
T4 640.00-620.00	Solid Round	3 1/2	A572-50 (50 ksi)	Solid Round	7/8	A572-50 (50 ksi)
T5 620.00-600.00	Solid Round	3 1/2	A572-50 (50 ksi)	Solid Round	1	A572-50 (50 ksi)
T6 600.00-580.00	Solid Round	3 1/2	A572-50 (50 ksi)	Solid Round	1 1/8	A572-50 (50 ksi)
T7 580.00-560.00	Solid Round	3 1/2	A572-50 (50 ksi)	Solid Round	1 1/4	A572-50 (50 ksi)
T8 560.00-540.00	Solid Round	3 1/2	A572-50 (50 ksi)	Solid Round	1 3/8	A572-50 (50 ksi)
T9 540.00-520.00	Solid Round	3 3/4	A572-50 (50 ksi)	Solid Round	1 3/8	A572-50 (50 ksi)
T10 520.00-500.00	Solid Round	3 3/4	A572-50 (50 ksi)	Solid Round	1 1/8	A572-50 (50 ksi)
T11 500.00-480.00	Solid Round	3 3/4	A572-50 (50 ksi)	Solid Round	7/8	A572-50 (50 ksi)
T12 480.00-460.00	Solid Round	3 3/4	A572-50 (50 ksi)	Solid Round	1	A572-50 (50 ksi)
T13 460.00-440.00	Solid Round	3 3/4	A572-50 (50 ksi)	Solid Round	1 1/4	A572-50 (50 ksi)
T14 440.00-420.00	Solid Round	4	A572-50 (50 ksi)	Solid Round	1 3/8	A572-50 (50 ksi)
T15 420.00-400.00	Solid Round	4	A572-50 (50 ksi)	Solid Round	1 3/8	A572-50 (50 ksi)
T16 400.00-380.00	Solid Round	4	A572-50 (50 ksi)	Solid Round	1 1/8	A572-50 (50 ksi)
T17 380.00-360.00	Solid Round	4	A572-50 (50 ksi)	Solid Round	1	A572-50 (50 ksi)
T18 360.00-340.00	Solid Round	4	A572-50 (50 ksi)	Solid Round	7/8	A572-50 (50 ksi)
T19 340.00-320.00	Solid Round	4	A572-50 (50 ksi)	Solid Round	1	A572-50 (50 ksi)
T20 320.00-300.00	Solid Round	4	A572-50 (50 ksi)	Solid Round	1 1/8	A572-50 (50 ksi)
T21 300.00-280.00	Solid Round	4	A572-50 (50 ksi)	Solid Round	1 3/8	A572-50 (50 ksi)
T22 280.00-260.00	Solid Round	4	A572-50 (50 ksi)	Solid Round	1 3/8	A572-50 (50 ksi)
T23 260.00-240.00	Solid Round	4 3/4	A572-50 (50 ksi)	Solid Round	1 1/4	A572-50 (50 ksi)
T24 240.00-220.00	Solid Round	4 3/4	A572-50 (50 ksi)	Solid Round	1 1/8	A572-50 (50 ksi)
T25	Solid Round	4 3/4	A572-50	Solid Round	7/8	A572-50

Tower Elevation ft	Leg Type	Leg Size	Leg Grade	Diagonal Type	Diagonal Size	Diagonal Grade
220.00-200.00			(50 ksi)			(50 ksi)
T26 200.00-180.00	Solid Round	4 3/4	A572-50 (50 ksi)	Solid Round	7/8	A572-50 (50 ksi)
T27 180.00-160.00	Solid Round	4 3/4	A572-50 (50 ksi)	Solid Round	1	A572-50 (50 ksi)
T28 160.00-140.00	Solid Round	4 3/4	A572-50 (50 ksi)	Solid Round	1 1/4	A572-50 (50 ksi)
T29 140.00-120.00	Solid Round	4 3/4	A572-50 (50 ksi)	Solid Round	1 1/4	A572-50 (50 ksi)
T30 120.00-100.00	Solid Round	4 3/4	A572-50 (50 ksi)	Solid Round	1	A572-50 (50 ksi)
T31 100.00-80.00	Solid Round	4 3/4	A572-50 (50 ksi)	Solid Round	7/8	A572-50 (50 ksi)
T32 80.00-60.00	Solid Round	4 3/4	A572-50 (50 ksi)	Solid Round	1	A572-50 (50 ksi)
T33 60.00-40.00	Solid Round	4 3/4	A572-50 (50 ksi)	Solid Round	1 1/4	A572-50 (50 ksi)
T34 40.00-20.00	Solid Round	4 3/4	A572-50 (50 ksi)	Solid Round	1 1/4	A572-50 (50 ksi)
T35 20.00-10.00	Solid Round	4 3/4	A572-50 (50 ksi)	Solid Round	1 1/2	A572-50 (50 ksi)
T36 10.00-0.00	Solid Round	6	A572-50 (50 ksi)	Double Equal Angle	2L3 1/2x3 1/2x1/4	A572-50 (50 ksi)

Tower Section Geometry *(cont'd)*

Tower Elevation ft	Top Girt Type	Top Girt Size	Top Girt Grade	Bottom Girt Type	Bottom Girt Size	Bottom Girt Grade
T1 697.00-680.00	Double Equal Angle	2L2 1/2x2 1/2x3/16	A572-50 (50 ksi)	Solid Round		A36 (36 ksi)
T2 680.00-660.00	Double Equal Angle	2L2 1/2x2 1/2x3/16	A572-50 (50 ksi)	Solid Round		A36 (36 ksi)
T3 660.00-640.00	Double Equal Angle	2L2 1/2x2 1/2x3/16	A572-50 (50 ksi)	Solid Round		A36 (36 ksi)
T4 640.00-620.00	Double Equal Angle	2L2 1/2x2 1/2x3/16	A572-50 (50 ksi)	Solid Round		A36 (36 ksi)
T5 620.00-600.00	Double Equal Angle	2L2 1/2x2 1/2x3/16	A572-50 (50 ksi)	Solid Round		A36 (36 ksi)
T6 600.00-580.00	Double Equal Angle	2L2 1/2x2 1/2x3/16	A572-50 (50 ksi)	Solid Round		A36 (36 ksi)
T7 580.00-560.00	Double Equal Angle	2L2 1/2x2 1/2x3/16	A572-50 (50 ksi)	Solid Round		A36 (36 ksi)
T8 560.00-540.00	Double Equal Angle	2L2 1/2x2 1/2x3/16	A572-50 (50 ksi)	Solid Round		A36 (36 ksi)
T9 540.00-520.00	Double Equal Angle	2L2 1/2x2 1/2x3/16	A572-50 (50 ksi)	Solid Round		A36 (36 ksi)
T10 520.00-500.00	Double Equal Angle	2L2 1/2x2 1/2x3/16	A572-50 (50 ksi)	Solid Round		A36 (36 ksi)
T11 500.00-480.00	Double Equal Angle	2L2 1/2x2 1/2x3/16	A572-50 (50 ksi)	Solid Round		A36 (36 ksi)
T12 480.00-460.00	Double Equal Angle	2L2 1/2x2 1/2x3/16	A572-50 (50 ksi)	Solid Round		A36 (36 ksi)
T13 460.00-440.00	Double Equal Angle	2L2 1/2x2 1/2x3/16	A572-50 (50 ksi)	Solid Round		A36 (36 ksi)
T14	Double Equal	2L2 1/2x2 1/2x3/16	A572-50	Solid Round		A36

Tower Elevation ft	Top Girt Type	Top Girt Size	Top Girt Grade	Bottom Girt Type	Bottom Girt Size	Bottom Girt Grade
440.00-420.00	Angle		(50 ksi)			(36 ksi)
T15	Double Equal	2L2 1/2x2 1/2x3/16	A572-50	Solid Round		A36
420.00-400.00	Angle		(50 ksi)			(36 ksi)
T16	Double Equal	2L2 1/2x2 1/2x3/16	A572-50	Solid Round		A36
400.00-380.00	Angle		(50 ksi)			(36 ksi)
T17	Double Equal	2L2 1/2x2 1/2x3/16	A572-50	Solid Round		A36
380.00-360.00	Angle		(50 ksi)			(36 ksi)
T18	Double Equal	2L2 1/2x2 1/2x3/16	A572-50	Solid Round		A36
360.00-340.00	Angle		(50 ksi)			(36 ksi)
T19	Double Equal	2L2 1/2x2 1/2x3/16	A572-50	Solid Round		A36
340.00-320.00	Angle		(50 ksi)			(36 ksi)
T20	Double Equal	2L2 1/2x2 1/2x3/16	A572-50	Solid Round		A36
320.00-300.00	Angle		(50 ksi)			(36 ksi)
T21	Double Equal	2L2 1/2x2 1/2x3/16	A572-50	Solid Round		A36
300.00-280.00	Angle		(50 ksi)			(36 ksi)
T22	Double Equal	2L2 1/2x2 1/2x3/16	A572-50	Solid Round		A36
280.00-260.00	Angle		(50 ksi)			(36 ksi)
T23	Double Equal	2L2 1/2x2 1/2x3/16	A572-50	Solid Round		A36
260.00-240.00	Angle		(50 ksi)			(36 ksi)
T24	Double Equal	2L2 1/2x2 1/2x3/16	A572-50	Solid Round		A36
240.00-220.00	Angle		(50 ksi)			(36 ksi)
T25	Double Equal	2L2 1/2x2 1/2x3/16	A572-50	Solid Round		A36
220.00-200.00	Angle		(50 ksi)			(36 ksi)
T26	Double Equal	2L2 1/2x2 1/2x3/16	A572-50	Solid Round		A36
200.00-180.00	Angle		(50 ksi)			(36 ksi)
T27	Double Equal	2L2 1/2x2 1/2x3/16	A572-50	Solid Round		A36
180.00-160.00	Angle		(50 ksi)			(36 ksi)
T28	Double Equal	2L2 1/2x2 1/2x3/16	A572-50	Solid Round		A36
160.00-140.00	Angle		(50 ksi)			(36 ksi)
T29	Double Equal	2L2 1/2x2 1/2x3/16	A572-50	Solid Round		A36
140.00-120.00	Angle		(50 ksi)			(36 ksi)
T30	Double Equal	2L2 1/2x2 1/2x3/16	A572-50	Solid Round		A36
120.00-100.00	Angle		(50 ksi)			(36 ksi)
T31 100.00-80.00	Double Equal	2L2 1/2x2 1/2x3/16	A572-50	Solid Round		A36
	Angle		(50 ksi)			(36 ksi)
T32 80.00-60.00	Double Equal	2L2 1/2x2 1/2x3/16	A572-50	Solid Round		A36
	Angle		(50 ksi)			(36 ksi)
T33 60.00-40.00	Double Equal	2L2 1/2x2 1/2x3/16	A572-50	Solid Round		A36
	Angle		(50 ksi)			(36 ksi)
T34 40.00-20.00	Double Equal	2L2 1/2x2 1/2x3/16	A572-50	Solid Round		A36
	Angle		(50 ksi)			(36 ksi)
T35 20.00-10.00	Double Equal	2L2 1/2x2 1/2x3/16	A572-50	Solid Round		A36
	Angle		(50 ksi)			(36 ksi)
T36 10.00-0.00	Double Equal	2L4x4x5/16	A572-50	Solid Round		A36
	Angle		(50 ksi)			(36 ksi)

Tower Section Geometry *(cont'd)*

Tower Elevation ft	No. of Mid Girts	Mid Girt Type	Mid Girt Size	Mid Girt Grade	Horizontal Type	Horizontal Size	Horizontal Grade
T1 697.00-680.00	None	Flat Bar		A36 (36 ksi)	Double Equal Angle	2L2 1/2x2 1/2x3/16	A572-50 (50 ksi)
T2 680.00-660.00	None	Flat Bar		A36 (36 ksi)	Double Equal Angle	2L2 1/2x2 1/2x3/16	A572-50 (50 ksi)

Tower Elevation ft	No. of Mid Girts	Mid Girt Type	Mid Girt Size	Mid Girt Grade	Horizontal Type	Horizontal Size	Horizontal Grade
T3 660.00-640.00	None	Flat Bar		A36 (36 ksi)	Double Equal Angle	2L2 1/2x2 1/2x3/16	A572-50 (50 ksi)
T4 640.00-620.00	None	Flat Bar		A36 (36 ksi)	Double Equal Angle	2L2 1/2x2 1/2x3/16	A572-50 (50 ksi)
T5 620.00-600.00	None	Flat Bar		A36 (36 ksi)	Double Equal Angle	2L2 1/2x2 1/2x3/16	A572-50 (50 ksi)
T6 600.00-580.00	None	Flat Bar		A36 (36 ksi)	Double Equal Angle	2L2 1/2x2 1/2x3/16	A572-50 (50 ksi)
T7 580.00-560.00	None	Flat Bar		A36 (36 ksi)	Double Equal Angle	2L2 1/2x2 1/2x3/16	A572-50 (50 ksi)
T8 560.00-540.00	None	Flat Bar		A36 (36 ksi)	Double Equal Angle	2L2 1/2x2 1/2x3/16	A572-50 (50 ksi)
T9 540.00-520.00	None	Flat Bar		A36 (36 ksi)	Double Equal Angle	2L2 1/2x2 1/2x3/16	A572-50 (50 ksi)
T10 520.00-500.00	None	Flat Bar		A36 (36 ksi)	Double Equal Angle	2L2 1/2x2 1/2x3/16	A572-50 (50 ksi)
T11 500.00-480.00	None	Flat Bar		A36 (36 ksi)	Double Equal Angle	2L2 1/2x2 1/2x3/16	A572-50 (50 ksi)
T12 480.00-460.00	None	Flat Bar		A36 (36 ksi)	Double Equal Angle	2L2 1/2x2 1/2x3/16	A572-50 (50 ksi)
T13 460.00-440.00	None	Flat Bar		A36 (36 ksi)	Double Equal Angle	2L2 1/2x2 1/2x3/16	A572-50 (50 ksi)
T14 440.00-420.00	None	Flat Bar		A36 (36 ksi)	Double Equal Angle	2L2 1/2x2 1/2x3/16	A572-50 (50 ksi)
T15 420.00-400.00	None	Flat Bar		A36 (36 ksi)	Double Equal Angle	2L2 1/2x2 1/2x3/16	A572-50 (50 ksi)
T16 400.00-380.00	None	Flat Bar		A36 (36 ksi)	Double Equal Angle	2L2 1/2x2 1/2x3/16	A572-50 (50 ksi)
T17 380.00-360.00	None	Flat Bar		A36 (36 ksi)	Double Equal Angle	2L2 1/2x2 1/2x3/16	A572-50 (50 ksi)
T18 360.00-340.00	None	Flat Bar		A36 (36 ksi)	Double Equal Angle	2L2 1/2x2 1/2x3/16	A572-50 (50 ksi)
T19 340.00-320.00	None	Flat Bar		A36 (36 ksi)	Double Equal Angle	2L2 1/2x2 1/2x3/16	A572-50 (50 ksi)
T20 320.00-300.00	None	Flat Bar		A36 (36 ksi)	Double Equal Angle	2L2 1/2x2 1/2x3/16	A572-50 (50 ksi)
T21 300.00-280.00	None	Flat Bar		A36 (36 ksi)	Double Equal Angle	2L2 1/2x2 1/2x3/16	A572-50 (50 ksi)
T22 280.00-260.00	None	Flat Bar		A36 (36 ksi)	Double Equal Angle	2L2 1/2x2 1/2x3/16	A572-50 (50 ksi)
T23 260.00-240.00	None	Flat Bar		A36 (36 ksi)	Double Equal Angle	2L2 1/2x2 1/2x3/16	A572-50 (50 ksi)
T24 240.00-220.00	None	Flat Bar		A36 (36 ksi)	Double Equal Angle	2L2 1/2x2 1/2x3/16	A572-50 (50 ksi)
T25 220.00-200.00	None	Flat Bar		A36 (36 ksi)	Double Equal Angle	2L2 1/2x2 1/2x3/16	A572-50 (50 ksi)
T26 200.00-180.00	None	Flat Bar		A36 (36 ksi)	Double Equal Angle	2L2 1/2x2 1/2x3/16	A572-50 (50 ksi)
T27 180.00-160.00	None	Flat Bar		A36 (36 ksi)	Double Equal Angle	2L2 1/2x2 1/2x3/16	A572-50 (50 ksi)
T28 160.00-140.00	None	Flat Bar		A36 (36 ksi)	Double Equal Angle	2L2 1/2x2 1/2x3/16	A572-50 (50 ksi)
T29 140.00-120.00	None	Flat Bar		A36 (36 ksi)	Double Equal Angle	2L2 1/2x2 1/2x3/16	A572-50 (50 ksi)
T30 120.00-100.00	None	Flat Bar		A36 (36 ksi)	Double Equal Angle	2L2 1/2x2 1/2x3/16	A572-50 (50 ksi)
T31 100.00-80.00	None	Flat Bar		A36 (36 ksi)	Double Equal Angle	2L2 1/2x2 1/2x3/16	A572-50 (50 ksi)
T32 80.00-60.00	None	Flat Bar		A36 (36 ksi)	Double Equal Angle	2L2 1/2x2 1/2x3/16	A572-50 (50 ksi)

Tower Elevation ft	No. of Mid Girts	Mid Girt Type	Mid Girt Size	Mid Girt Grade	Horizontal Type	Horizontal Size	Horizontal Grade
T33 60.00-40.00	None	Flat Bar		A36 (36 ksi)	Double Equal Angle	2L2 1/2x2 1/2x3/16	A572-50 (50 ksi)
T34 40.00-20.00	None	Flat Bar		A36 (36 ksi)	Double Equal Angle	2L2 1/2x2 1/2x3/16	A572-50 (50 ksi)
T35 20.00-10.00	None	Flat Bar		A36 (36 ksi)	Double Equal Angle	2L2 1/2x2 1/2x3/16	A572-50 (50 ksi)
T36 10.00-0.00	None	Flat Bar		A36 (36 ksi)	Double Equal Angle	2L3 1/2x3 1/2x1/4	A572-50 (50 ksi)

Tower Section Geometry *(cont'd)*

Tower Elevation ft	Gusset Area (per face) ft^2	Gusset Thickness in	Gusset Grade	Adjust. Factor A_f	Adjust. Factor A_r	Weight Mult.	Double Angle Stitch Bolt Spacing Diagonals in	Double Angle Stitch Bolt Spacing Horizontals in	Double Angle Stitch Bolt Spacing Redundants in
T1 697.00-680.00	0.00	0.5000	A36 (36 ksi)	1	1	1	36.0000	Mid-Pt	36.0000
T2 680.00-660.00	0.00	0.5000	A36 (36 ksi)	1	1	1	36.0000	Mid-Pt	36.0000
T3 660.00-640.00	0.00	0.5000	A36 (36 ksi)	1	1	1	36.0000	Mid-Pt	36.0000
T4 640.00-620.00	0.00	0.5000	A36 (36 ksi)	1	1	1	36.0000	Mid-Pt	36.0000
T5 620.00-600.00	0.00	0.5000	A36 (36 ksi)	1	1	1	36.0000	Mid-Pt	36.0000
T6 600.00-580.00	0.00	0.5000	A36 (36 ksi)	1	1	1	36.0000	Mid-Pt	36.0000
T7 580.00-560.00	0.00	0.5000	A36 (36 ksi)	1	1	1	36.0000	Mid-Pt	36.0000
T8 560.00-540.00	0.00	0.5000	A36 (36 ksi)	1	1	1	36.0000	Mid-Pt	36.0000
T9 540.00-520.00	0.00	0.5000	A36 (36 ksi)	1	1	1	36.0000	Mid-Pt	36.0000
T10 520.00-500.00	0.00	0.5000	A36 (36 ksi)	1	1	1	36.0000	Mid-Pt	36.0000
T11 500.00-480.00	0.00	0.5000	A36 (36 ksi)	1	1	1	36.0000	Mid-Pt	36.0000
T12 480.00-460.00	0.00	0.5000	A36 (36 ksi)	1	1	1	36.0000	Mid-Pt	36.0000
T13 460.00-440.00	0.00	0.5000	A36 (36 ksi)	1	1	1	36.0000	Mid-Pt	36.0000
T14 440.00-420.00	0.00	0.5000	A36 (36 ksi)	1	1	1	36.0000	Mid-Pt	36.0000
T15 420.00-400.00	0.00	0.5000	A36 (36 ksi)	1	1	1	36.0000	Mid-Pt	36.0000
T16 400.00-380.00	0.00	0.5000	A36 (36 ksi)	1	1	1	36.0000	Mid-Pt	36.0000
T17 380.00-360.00	0.00	0.5000	A36 (36 ksi)	1	1	1	36.0000	Mid-Pt	36.0000
T18 360.00-340.00	0.00	0.5000	A36 (36 ksi)	1	1	1	36.0000	Mid-Pt	36.0000
T19 340.00-320.00	0.00	0.5000	A36 (36 ksi)	1	1	1	36.0000	Mid-Pt	36.0000
T20	0.00	0.5000	A36	1	1	1	36.0000	Mid-Pt	36.0000

Tower Elevation ft	Gusset Area (per face) ft²	Gusset Thickness in	Gusset Grade	Adjust. Factor A_f	Adjust. Factor A_r	Weight Mult.	Double Angle Stitch Bolt Spacing Diagonals in	Double Angle Stitch Bolt Spacing Horizontals in	Double Angle Stitch Bolt Spacing Redundants in
320.00-300.00			(36 ksi)						
T21	0.00	0.5000	A36	1	1	1	36.0000	Mid-Pt	36.0000
300.00-280.00			(36 ksi)						
T22	0.00	0.5000	A36	1	1	1	36.0000	Mid-Pt	36.0000
280.00-260.00			(36 ksi)						
T23	0.00	0.5000	A36	1	1	1	36.0000	Mid-Pt	36.0000
260.00-240.00			(36 ksi)						
T24	0.00	0.5000	A36	1	1	1	36.0000	Mid-Pt	36.0000
240.00-220.00			(36 ksi)						
T25	0.00	0.5000	A36	1	1	1	36.0000	Mid-Pt	36.0000
220.00-200.00			(36 ksi)						
T26	0.00	0.5000	A36	1	1	1	36.0000	Mid-Pt	36.0000
200.00-180.00			(36 ksi)						
T27	0.00	0.5000	A36	1	1	1	36.0000	Mid-Pt	36.0000
180.00-160.00			(36 ksi)						
T28	0.00	0.5000	A36	1	1	1	36.0000	Mid-Pt	36.0000
160.00-140.00			(36 ksi)						
T29	0.00	0.5000	A36	1	1	1	36.0000	Mid-Pt	36.0000
140.00-120.00			(36 ksi)						
T30	0.00	0.5000	A36	1	1	1	36.0000	Mid-Pt	36.0000
120.00-100.00			(36 ksi)						
T31	0.00	0.5000	A36	1	1	1	36.0000	Mid-Pt	36.0000
100.00-80.00			(36 ksi)						
T32	0.00	0.5000	A36	1	1	1	36.0000	Mid-Pt	36.0000
80.00-60.00			(36 ksi)						
T33	0.00	0.5000	A36	1	1	1	36.0000	Mid-Pt	36.0000
60.00-40.00			(36 ksi)						
T34	0.00	0.5000	A36	1	1	1	36.0000	Mid-Pt	36.0000
40.00-20.00			(36 ksi)						
T35	0.00	0.5000	A36	1	1	1	36.0000	Mid-Pt	36.0000
20.00-10.00			(36 ksi)						
T36 10.00-0.00	0.00	0.5000	A36	1	1	1	Mid-Pt	Mid-Pt	36.0000
			(36 ksi)						

Tower Section Geometry *(cont'd)*

Tower Elevation ft	Calc K Single Angles	Calc K Solid Rounds	K Factors[1] Legs	X Brace Diags X Y	K Brace Diags X Y	Single Diags X Y	Girts X Y	Horiz. X Y	Sec. Horiz. X Y	Inner Brace X Y
T1	Yes	Yes	1	1	1	1	1	1	1	1
697.00-680.00				1	1	1	1	1	1	1
T2	Yes	Yes	1	1	1	1	1	1	1	1
680.00-660.00				1	1	1	1	1	1	1
T3	Yes	Yes	1	1	1	1	1	1	1	1
660.00-640.00				1	1	1	1	1	1	1
T4	Yes	Yes	1	1	1	1	1	1	1	1
640.00-620.00				1	1	1	1	1	1	1
T5	Yes	Yes	1	1	1	1	1	1	1	1
620.00-600.00				1	1	1	1	1	1	1
T6	Yes	Yes	1	1	1	1	1	1	1	1
600.00-580.00				1	1	1	1	1	1	1
T7	Yes	Yes	1	1	1	1	1	1	1	1

Tower Elevation ft	Calc K Single Angles	Calc K Solid Rounds	K Factors[1] Legs	X Brace Diags X Y	K Brace Diags X Y	Single Diags X Y	Girts X Y	Horiz. X Y	Sec. Horiz. X Y	Inner Brace X Y
580.00-560.00				1	1	1	1	1	1	1
T8	Yes	Yes	1	1	1	1	1	1	1	1
560.00-540.00				1	1	1	1	1	1	1
T9	Yes	Yes	1	1	1	1	1	1	1	1
540.00-520.00				1	1	1	1	1	1	1
T10	Yes	Yes	1	1	1	1	1	1	1	1
520.00-500.00				1	1	1	1	1	1	1
T11	Yes	Yes	1	1	1	1	1	1	1	1
500.00-480.00				1	1	1	1	1	1	1
T12	Yes	Yes	1	1	1	1	1	1	1	1
480.00-460.00				1	1	1	1	1	1	1
T13	Yes	Yes	1	1	1	1	1	1	1	1
460.00-440.00				1	1	1	1	1	1	1
T14	Yes	Yes	1	1	1	1	1	1	1	1
440.00-420.00				1	1	1	1	1	1	1
T15	Yes	Yes	1	1	1	1	1	1	1	1
420.00-400.00				1	1	1	1	1	1	1
T16	Yes	Yes	1	1	1	1	1	1	1	1
400.00-380.00				1	1	1	1	1	1	1
T17	Yes	Yes	1	1	1	1	1	1	1	1
380.00-360.00				1	1	1	1	1	1	1
T18	Yes	Yes	1	1	1	1	1	1	1	1
360.00-340.00				1	1	1	1	1	1	1
T19	Yes	Yes	1	1	1	1	1	1	1	1
340.00-320.00				1	1	1	1	1	1	1
T20	Yes	Yes	1	1	1	1	1	1	1	1
320.00-300.00				1	1	1	1	1	1	1
T21	Yes	Yes	1	1	1	1	1	1	1	1
300.00-280.00				1	1	1	1	1	1	1
T22	Yes	Yes	1	1	1	1	1	1	1	1
280.00-260.00				1	1	1	1	1	1	1
T23	Yes	Yes	1	1	1	1	1	1	1	1
260.00-240.00				1	1	1	1	1	1	1
T24	Yes	Yes	1	1	1	1	1	1	1	1
240.00-220.00				1	1	1	1	1	1	1
T25	Yes	Yes	1	1	1	1	1	1	1	1
220.00-200.00				1	1	1	1	1	1	1
T26	Yes	Yes	1	1	1	1	1	1	1	1
200.00-180.00				1	1	1	1	1	1	1
T27	Yes	Yes	1	1	1	1	1	1	1	1
180.00-160.00				1	1	1	1	1	1	1
T28	Yes	Yes	1	1	1	1	1	1	1	1
160.00-140.00				1	1	1	1	1	1	1
T29	Yes	Yes	1	1	1	1	1	1	1	1
140.00-120.00				1	1	1	1	1	1	1
T30	Yes	Yes	1	1	1	1	1	1	1	1
120.00-100.00				1	1	1	1	1	1	1
T31	Yes	Yes	1	1	1	1	1	1	1	1
100.00-80.00				1	1	1	1	1	1	1
T32	Yes	Yes	1	1	1	1	1	1	1	1
80.00-60.00				1	1	1	1	1	1	1
T33	Yes	Yes	1	1	1	1	1	1	1	1
60.00-40.00				1	1	1	1	1	1	1
T34	Yes	Yes	1	1	1	1	1	1	1	1
40.00-20.00				1	1	1	1	1	1	1
T35	Yes	Yes	1	1	1	1	1	1	1	1
20.00-10.00				1	1	1	1	1	1	1

Tower Elevation ft	Calc K Single Angles	Calc K Solid Rounds	K Factors[1] Legs	X Brace Diags X Y	K Brace Diags X Y	Single Diags X Y	Girts X Y	Horiz. X Y	Sec. Horiz. X Y	Inner Brace X Y
T36	Yes	Yes	1	1	1	1	1	1	1	1
10.00-0.00				1	1	1	1	1	1	1

[1]*Note: K factors are applied to member segment lengths. K-braces without inner supporting members will have the K factor in the out-of-plane direction applied to the overall length.*

Tower Section Geometry *(cont'd)*

Tower Elevation ft	Leg Net Width Deduct in	Leg U	Diagonal Net Width Deduct in	Diagonal U	Top Girt Net Width Deduct in	Top Girt U	Bottom Girt Net Width Deduct in	Bottom Girt U	Mid Girt Net Width Deduct in	Mid Girt U	Long Horizontal Net Width Deduct in	Long Horizontal U	Short Horizontal Net Width Deduct in	Short Horizontal U
T1 697.00-680.00	0.0000	1	0.0000	1	1.0000	0.75	0.0000	0.75	0.0000	0.75	1.0000	0.75	0.0000	0.75
T2 680.00-660.00	0.0000	1	0.0000	1	1.0000	0.75	0.0000	0.75	0.0000	0.75	1.0000	0.75	0.0000	0.75
T3 660.00-640.00	0.0000	1	0.0000	1	1.0000	0.75	0.0000	0.75	0.0000	0.75	1.0000	0.75	0.0000	0.75
T4 640.00-620.00	0.0000	1	0.0000	1	1.0000	0.75	0.0000	0.75	0.0000	0.75	1.0000	0.75	0.0000	0.75
T5 620.00-600.00	0.0000	1	0.0000	1	1.0000	0.75	0.0000	0.75	0.0000	0.75	1.0000	0.75	0.0000	0.75
T6 600.00-580.00	0.0000	1	0.0000	1	1.0000	0.75	0.0000	0.75	0.0000	0.75	1.0000	0.75	0.0000	0.75
T7 580.00-560.00	0.0000	1	0.0000	1	1.0000	0.75	0.0000	0.75	0.0000	0.75	1.0000	0.75	0.0000	0.75
T8 560.00-540.00	0.0000	1	0.0000	1	1.0000	0.75	0.0000	0.75	0.0000	0.75	1.0000	0.75	0.0000	0.75
T9 540.00-520.00	0.0000	1	0.0000	1	1.0000	0.75	0.0000	0.75	0.0000	0.75	1.0000	0.75	0.0000	0.75
T10 520.00-500.00	0.0000	1	0.0000	1	1.0000	0.75	0.0000	0.75	0.0000	0.75	1.0000	0.75	0.0000	0.75
T11 500.00-480.00	0.0000	1	0.0000	1	1.0000	0.75	0.0000	0.75	0.0000	0.75	1.0000	0.75	0.0000	0.75
T12 480.00-460.00	0.0000	1	0.0000	1	1.0000	0.75	0.0000	0.75	0.0000	0.75	1.0000	0.75	0.0000	0.75
T13 460.00-440.00	0.0000	1	0.0000	1	1.0000	0.75	0.0000	0.75	0.0000	0.75	1.0000	0.75	0.0000	0.75
T14 440.00-420.00	0.0000	1	0.0000	1	1.0000	0.75	0.0000	0.75	0.0000	0.75	1.0000	0.75	0.0000	0.75
T15 420.00-400.00	0.0000	1	0.0000	1	1.0000	0.75	0.0000	0.75	0.0000	0.75	1.0000	0.75	0.0000	0.75
T16 400.00-380.00	0.0000	1	0.0000	1	1.0000	0.75	0.0000	0.75	0.0000	0.75	1.0000	0.75	0.0000	0.75
T17 380.00-360.00	0.0000	1	0.0000	1	1.0000	0.75	0.0000	0.75	0.0000	0.75	1.0000	0.75	0.0000	0.75
T18 360.00-340.00	0.0000	1	0.0000	1	1.0000	0.75	0.0000	0.75	0.0000	0.75	1.0000	0.75	0.0000	0.75
T19 340.00-320.00	0.0000	1	0.0000	1	1.0000	0.75	0.0000	0.75	0.0000	0.75	1.0000	0.75	0.0000	0.75
T20 320.00-300.00	0.0000	1	0.0000	1	1.0000	0.75	0.0000	0.75	0.0000	0.75	1.0000	0.75	0.0000	0.75

Tower Elevation ft	Leg		Diagonal		Top Girt		Bottom Girt		Mid Girt		Long Horizontal		Short Horizontal	
	Net Width Deduct in	U	Net Width Deduct in	U	Net Width Deduct in	U	Net Width Deduct in	U	Net Width Deduct in	U	Net Width Deduct in	U	Net Width Deduct in	U
T21 300.00-280.00	0.0000	1	0.0000	1	1.0000	0.75	0.0000	0.75	0.0000	0.75	1.0000	0.75	0.0000	0.75
T22 280.00-260.00	0.0000	1	0.0000	1	1.0000	0.75	0.0000	0.75	0.0000	0.75	1.0000	0.75	0.0000	0.75
T23 260.00-240.00	0.0000	1	0.0000	1	1.0000	0.75	0.0000	0.75	0.0000	0.75	1.0000	0.75	0.0000	0.75
T24 240.00-220.00	0.0000	1	0.0000	1	1.0000	0.75	0.0000	0.75	0.0000	0.75	1.0000	0.75	0.0000	0.75
T25 220.00-200.00	0.0000	1	0.0000	1	1.0000	0.75	0.0000	0.75	0.0000	0.75	1.0000	0.75	0.0000	0.75
T26 200.00-180.00	0.0000	1	0.0000	1	1.0000	0.75	0.0000	0.75	0.0000	0.75	1.0000	0.75	0.0000	0.75
T27 180.00-160.00	0.0000	1	0.0000	1	1.0000	0.75	0.0000	0.75	0.0000	0.75	1.0000	0.75	0.0000	0.75
T28 160.00-140.00	0.0000	1	0.0000	1	1.0000	0.75	0.0000	0.75	0.0000	0.75	1.0000	0.75	0.0000	0.75
T29 140.00-120.00	0.0000	1	0.0000	1	1.0000	0.75	0.0000	0.75	0.0000	0.75	1.0000	0.75	0.0000	0.75
T30 120.00-100.00	0.0000	1	0.0000	1	1.0000	0.75	0.0000	0.75	0.0000	0.75	1.0000	0.75	0.0000	0.75
T31 100.00-80.00	0.0000	1	0.0000	1	1.0000	0.75	0.0000	0.75	0.0000	0.75	1.0000	0.75	0.0000	0.75
T32 80.00-60.00	0.0000	1	0.0000	1	1.0000	0.75	0.0000	0.75	0.0000	0.75	1.0000	0.75	0.0000	0.75
T33 60.00-40.00	0.0000	1	0.0000	1	1.0000	0.75	0.0000	0.75	0.0000	0.75	1.0000	0.75	0.0000	0.75
T34 40.00-20.00	0.0000	1	0.0000	1	1.0000	0.75	0.0000	0.75	0.0000	0.75	1.0000	0.75	0.0000	0.75
T35 20.00-10.00	0.0000	1	0.0000	1	1.0000	0.75	0.0000	0.75	0.0000	0.75	1.0000	0.75	0.0000	0.75
T36 10.00-0.00	0.0000	1	0.0000	1	1.2500	0.75	0.0000	0.75	0.0000	0.75	1.0000	0.75	0.0000	0.75

Tower Elevation ft	Redundant Horizontal		Redundant Diagonal		Redundant Sub-Diagonal		Redundant Sub-Horizontal		Redundant Vertical		Redundant Hip		Redundant Hip Diagonal	
	Net Width Deduct in	U	Net Width Deduct in	U	Net Width Deduct in	U	Net Width Deduct in	U	Net Width Deduct in	U	Net Width Deduct in	U	Net Width Deduct in	U
T1 697.00-680.00	0.0000	0.75	0.0000	0.75	0.0000	0.75	0.0000	0.75	0.0000	0.75	0.0000	0.75	0.0000	0.75
T2 680.00-660.00	0.0000	0.75	0.0000	0.75	0.0000	0.75	0.0000	0.75	0.0000	0.75	0.0000	0.75	0.0000	0.75
T3 660.00-640.00	0.0000	0.75	0.0000	0.75	0.0000	0.75	0.0000	0.75	0.0000	0.75	0.0000	0.75	0.0000	0.75
T4 640.00-620.00	0.0000	0.75	0.0000	0.75	0.0000	0.75	0.0000	0.75	0.0000	0.75	0.0000	0.75	0.0000	0.75
T5 620.00-600.00	0.0000	0.75	0.0000	0.75	0.0000	0.75	0.0000	0.75	0.0000	0.75	0.0000	0.75	0.0000	0.75
T6 600.00-580.00	0.0000	0.75	0.0000	0.75	0.0000	0.75	0.0000	0.75	0.0000	0.75	0.0000	0.75	0.0000	0.75
T7 580.00-560.00	0.0000	0.75	0.0000	0.75	0.0000	0.75	0.0000	0.75	0.0000	0.75	0.0000	0.75	0.0000	0.75
T8 560.00-540.00	0.0000	0.75	0.0000	0.75	0.0000	0.75	0.0000	0.75	0.0000	0.75	0.0000	0.75	0.0000	0.75

Tower Elevation ft	Redundant Horizontal		Redundant Diagonal		Redundant Sub-Diagonal		Redundant Sub-Horizontal		Redundant Vertical		Redundant Hip		Redundant Hip Diagonal	
	Net Width Deduct in	U	Net Width Deduct in	U	Net Width Deduct in	U	Net Width Deduct in	U	Net Width Deduct in	U	Net Width Deduct in	U	Net Width Deduct in	U
T9 540.00-520.00	0.0000	0.75	0.0000	0.75	0.0000	0.75	0.0000	0.75	0.0000	0.75	0.0000	0.75	0.0000	0.75
T10 520.00-500.00	0.0000	0.75	0.0000	0.75	0.0000	0.75	0.0000	0.75	0.0000	0.75	0.0000	0.75	0.0000	0.75
T11 500.00-480.00	0.0000	0.75	0.0000	0.75	0.0000	0.75	0.0000	0.75	0.0000	0.75	0.0000	0.75	0.0000	0.75
T12 480.00-460.00	0.0000	0.75	0.0000	0.75	0.0000	0.75	0.0000	0.75	0.0000	0.75	0.0000	0.75	0.0000	0.75
T13 460.00-440.00	0.0000	0.75	0.0000	0.75	0.0000	0.75	0.0000	0.75	0.0000	0.75	0.0000	0.75	0.0000	0.75
T14 440.00-420.00	0.0000	0.75	0.0000	0.75	0.0000	0.75	0.0000	0.75	0.0000	0.75	0.0000	0.75	0.0000	0.75
T15 420.00-400.00	0.0000	0.75	0.0000	0.75	0.0000	0.75	0.0000	0.75	0.0000	0.75	0.0000	0.75	0.0000	0.75
T16 400.00-380.00	0.0000	0.75	0.0000	0.75	0.0000	0.75	0.0000	0.75	0.0000	0.75	0.0000	0.75	0.0000	0.75
T17 380.00-360.00	0.0000	0.75	0.0000	0.75	0.0000	0.75	0.0000	0.75	0.0000	0.75	0.0000	0.75	0.0000	0.75
T18 360.00-340.00	0.0000	0.75	0.0000	0.75	0.0000	0.75	0.0000	0.75	0.0000	0.75	0.0000	0.75	0.0000	0.75
T19 340.00-320.00	0.0000	0.75	0.0000	0.75	0.0000	0.75	0.0000	0.75	0.0000	0.75	0.0000	0.75	0.0000	0.75
T20 320.00-300.00	0.0000	0.75	0.0000	0.75	0.0000	0.75	0.0000	0.75	0.0000	0.75	0.0000	0.75	0.0000	0.75
T21 300.00-280.00	0.0000	0.75	0.0000	0.75	0.0000	0.75	0.0000	0.75	0.0000	0.75	0.0000	0.75	0.0000	0.75
T22 280.00-260.00	0.0000	0.75	0.0000	0.75	0.0000	0.75	0.0000	0.75	0.0000	0.75	0.0000	0.75	0.0000	0.75
T23 260.00-240.00	0.0000	0.75	0.0000	0.75	0.0000	0.75	0.0000	0.75	0.0000	0.75	0.0000	0.75	0.0000	0.75
T24 240.00-220.00	0.0000	0.75	0.0000	0.75	0.0000	0.75	0.0000	0.75	0.0000	0.75	0.0000	0.75	0.0000	0.75
T25 220.00-200.00	0.0000	0.75	0.0000	0.75	0.0000	0.75	0.0000	0.75	0.0000	0.75	0.0000	0.75	0.0000	0.75
T26 200.00-180.00	0.0000	0.75	0.0000	0.75	0.0000	0.75	0.0000	0.75	0.0000	0.75	0.0000	0.75	0.0000	0.75
T27 180.00-160.00	0.0000	0.75	0.0000	0.75	0.0000	0.75	0.0000	0.75	0.0000	0.75	0.0000	0.75	0.0000	0.75
T28 160.00-140.00	0.0000	0.75	0.0000	0.75	0.0000	0.75	0.0000	0.75	0.0000	0.75	0.0000	0.75	0.0000	0.75
T29 140.00-120.00	0.0000	0.75	0.0000	0.75	0.0000	0.75	0.0000	0.75	0.0000	0.75	0.0000	0.75	0.0000	0.75
T30 120.00-100.00	0.0000	0.75	0.0000	0.75	0.0000	0.75	0.0000	0.75	0.0000	0.75	0.0000	0.75	0.0000	0.75
T31 100.00-80.00	0.0000	0.75	0.0000	0.75	0.0000	0.75	0.0000	0.75	0.0000	0.75	0.0000	0.75	0.0000	0.75
T32 80.00-60.00	0.0000	0.75	0.0000	0.75	0.0000	0.75	0.0000	0.75	0.0000	0.75	0.0000	0.75	0.0000	0.75
T33 60.00-40.00	0.0000	0.75	0.0000	0.75	0.0000	0.75	0.0000	0.75	0.0000	0.75	0.0000	0.75	0.0000	0.75
T34 40.00-20.00	0.0000	0.75	0.0000	0.75	0.0000	0.75	0.0000	0.75	0.0000	0.75	0.0000	0.75	0.0000	0.75
T35 20.00-10.00	0.0000	0.75	0.0000	0.75	0.0000	0.75	0.0000	0.75	0.0000	0.75	0.0000	0.75	0.0000	0.75
T36 10.00-0.00	0.0000	0.75	0.0000	0.75	0.0000	0.75	0.0000	0.75	0.0000	0.75	0.0000	0.75	0.0000	0.75

Tower Section Geometry *(cont'd)*

Tower Elevation ft	Leg Connection Type	Leg		Diagonal		Top Girt		Bottom Girt		Mid Girt		Long Horizontal		Short Horizontal	
		Bolt Size in	No.	Bolt Size in	No.	Bolt Size in	No.	Bolt Size in	No.	Bolt Size in	No.	Bolt Size in	No.	Bolt Size in	No.
T1	Flange	1.0000	4	0.8750	2	0.8750	2	0.6250	0	0.6250	0	0.8750	2	0.6250	0
697.00-680.00		A325X		A325X		A325X		A325N		A325N		A325X		A325N	
T2	Flange	1.0000	4	0.8750	2	0.8750	2	0.6250	0	0.6250	0	0.8750	2	0.6250	0
680.00-660.00		A325X		A325X		A325X		A325N		A325N		A325X		A325N	
T3	Flange	1.0000	4	0.8750	2	0.8750	2	0.6250	0	0.6250	0	0.8750	2	0.6250	0
660.00-640.00		A325X		A325X		A325X		A325N		A325N		A325X		A325N	
T4	Flange	1.0000	4	0.8750	2	0.8750	2	0.6250	0	0.6250	0	0.8750	2	0.6250	0
640.00-620.00		A325X		A325X		A325X		A325N		A325N		A325X		A325N	
T5	Flange	1.0000	4	0.8750	2	0.8750	2	0.6250	0	0.6250	0	0.8750	2	0.6250	0
620.00-600.00		A325X		A325X		A325X		A325N		A325N		A325X		A325N	
T6	Flange	1.0000	4	0.8750	2	0.8750	2	0.6250	0	0.6250	0	0.8750	2	0.6250	0
600.00-580.00		A325X		A325X		A325X		A325N		A325N		A325X		A325N	
T7	Flange	1.0000	4	0.8750	2	0.8750	2	0.6250	0	0.6250	0	0.8750	2	0.6250	0
580.00-560.00		A325X		A325X		A325X		A325N		A325N		A325X		A325N	
T8	Flange	1.0000	4	0.8750	2	0.8750	2	0.6250	0	0.6250	0	0.8750	2	0.6250	0
560.00-540.00		A325X		A325X		A325X		A325N		A325N		A325X		A325N	
T9	Flange	1.0000	4	0.8750	2	0.8750	2	0.6250	0	0.6250	0	0.8750	2	0.6250	0
540.00-520.00		A325X		A325X		A325X		A325N		A325N		A325X		A325N	
T10	Flange	1.0000	4	0.8750	2	0.8750	2	0.6250	0	0.6250	0	0.8750	2	0.6250	0
520.00-500.00		A325X		A325X		A325X		A325N		A325N		A325X		A325N	
T11	Flange	1.0000	4	0.8750	2	0.8750	2	0.6250	0	0.6250	0	0.8750	2	0.6250	0
500.00-480.00		A325X		A325X		A325X		A325N		A325N		A325X		A325N	
T12	Flange	1.0000	4	0.8750	2	0.8750	2	0.6250	0	0.6250	0	0.8750	2	0.6250	0
480.00-460.00		A325X		A325X		A325X		A325N		A325N		A325X		A325N	
T13	Flange	1.0000	4	0.8750	2	0.8750	2	0.6250	0	0.6250	0	0.8750	2	0.6250	0
460.00-440.00		A325X		A325X		A325X		A325N		A325N		A325X		A325N	
T14	Flange	1.0000	4	0.8750	2	0.8750	2	0.6250	0	0.6250	0	0.8750	2	0.6250	0
440.00-420.00		A325X		A325X		A325X		A325N		A325N		A325X		A325N	
T15	Flange	1.0000	4	0.8750	2	0.8750	2	0.6250	0	0.6250	0	0.8750	2	0.6250	0
420.00-400.00		A325X		A325X		A325X		A325N		A325N		A325X		A325N	
T16	Flange	1.0000	4	0.8750	2	0.8750	2	0.6250	0	0.6250	0	0.8750	2	0.6250	0
400.00-380.00		A325X		A325X		A325X		A325N		A325N		A325X		A325N	
T17	Flange	1.0000	4	0.8750	2	0.8750	2	0.6250	0	0.6250	0	0.8750	2	0.6250	0
380.00-360.00		A325X		A325X		A325X		A325N		A325N		A325X		A325N	
T18	Flange	1.0000	4	0.8750	2	0.8750	2	0.6250	0	0.6250	0	0.8750	2	0.6250	0
360.00-340.00		A325X		A325X		A325X		A325N		A325N		A325X		A325N	
T19	Flange	1.0000	4	0.8750	2	0.8750	2	0.6250	0	0.6250	0	0.8750	2	0.6250	0
340.00-320.00		A325X		A325X		A325X		A325N		A325N		A325X		A325N	
T20	Flange	1.0000	4	0.8750	2	0.8750	2	0.6250	0	0.6250	0	0.8750	2	0.6250	0
320.00-300.00		A325X		A325X		A325X		A325N		A325N		A325X		A325N	
T21	Flange	1.0000	4	0.8750	2	0.8750	2	0.6250	0	0.6250	0	0.8750	2	0.6250	0
300.00-280.00		A325X		A325X		A325X		A325N		A325N		A325X		A325N	
T22	Flange	1.0000	4	0.8750	2	0.8750	2	0.6250	0	0.6250	0	0.8750	2	0.6250	0
280.00-260.00		A325X		A325X		A325X		A325N		A325N		A325X		A325N	
T23	Flange	1.2500	4	0.8750	2	0.8750	2	0.6250	0	0.6250	0	0.8750	2	0.6250	0
260.00-240.00		A325X		A325X		A325X		A325N		A325N		A325X		A325N	
T24	Flange	1.2500	4	0.8750	2	0.8750	2	0.6250	0	0.6250	0	0.8750	2	0.6250	0
240.00-220.00		A325X		A325X		A325X		A325N		A325N		A325X		A325N	
T25	Flange	1.2500	4	0.8750	2	0.8750	2	0.6250	0	0.6250	0	0.8750	2	0.6250	0
220.00-200.00		A325X		A325X		A325X		A325N		A325N		A325X		A325N	
T26	Flange	1.2500	4	0.8750	2	0.8750	2	0.6250	0	0.6250	0	0.8750	2	0.6250	0
200.00-180.00		A325X		A325X		A325X		A325N		A325N		A325X		A325N	

Tower Elevation ft	Leg Connection Type	Leg		Diagonal		Top Girt		Bottom Girt		Mid Girt		Long Horizontal		Short Horizontal	
		Bolt Size in	No.	Bolt Size in	No.	Bolt Size in	No.	Bolt Size in	No.	Bolt Size in	No.	Bolt Size in	No.	Bolt Size in	No.
T27	Flange	1.2500	4	0.8750	2	0.8750	2	0.6250	0	0.6250	0	0.8750	2	0.6250	0
180.00-160.00		A325X		A325X		A325X		A325N		A325N		A325X		A325N	
T28	Flange	1.2500	4	0.8750	2	0.8750	2	0.6250	0	0.6250	0	0.8750	2	0.6250	0
160.00-140.00		A325X		A325X		A325X		A325N		A325N		A325X		A325N	
T29	Flange	1.2500	4	0.8750	2	0.8750	2	0.6250	0	0.6250	0	0.8750	2	0.6250	0
140.00-120.00		A325X		A325X		A325X		A325N		A325N		A325X		A325N	
T30	Flange	1.2500	4	0.8750	2	0.8750	2	0.6250	0	0.6250	0	0.8750	2	0.6250	0
120.00-100.00		A325X		A325X		A325X		A325N		A325N		A325X		A325N	
T31	Flange	1.2500	4	0.8750	2	0.8750	2	0.6250	0	0.6250	0	0.8750	2	0.6250	0
100.00-80.00		A325X		A325X		A325X		A325N		A325N		A325X		A325N	
T32	Flange	1.2500	4	0.8750	2	0.8750	2	0.6250	0	0.6250	0	0.8750	2	0.6250	0
80.00-60.00		A325X		A325X		A325X		A325N		A325N		A325X		A325N	
T33	Flange	1.2500	4	0.8750	2	0.8750	2	0.6250	0	0.6250	0	0.8750	2	0.6250	0
60.00-40.00		A325X		A325X		A325X		A325N		A325N		A325X		A325N	
T34	Flange	1.2500	4	0.8750	2	0.8750	2	0.6250	0	0.6250	0	0.8750	2	0.6250	0
40.00-20.00		A325X		A325X		A325X		A325N		A325N		A325X		A325N	
T35	Flange	1.2500	4	1.0000	2	0.8750	2	0.6250	0	0.6250	0	0.8750	2	0.6250	0
20.00-10.00		A325X		A325X		A325X		A325N		A325N		A325X		A325N	
T36 10.00-0.00	Flange	1.2500	4	0.8750	2	1.1250	2	0.6250	0	0.6250	0	0.8750	2	0.6250	0
		A325X		A325X		A325X		A325N		A325N		A325X		A325N	

Guy Data

Guy Elevation ft	Guy Grade	Guy Size	Initial Tension lb	%	Guy Modulus ksi	Guy Weight plf	L_u ft	Anchor Radius ft	Anchor Azimuth Adj. °	Anchor Elevation ft	End Fitting Efficiency %
684.292	UHS	A 1 3/8" UHS	26600.00	10%	24000	3.970	1127.87	794.80	0.0000	-120.20	100%
		B 1 3/8" UHS	26600.00	10%	24000	3.970	982.50	680.80	0.0000	-28.30	100%
		C 1 3/8" UHS	26600.00	10%	24000	3.970	1227.94	878.80	0.0000	-177.60	100%
554.958	UHS	A 1 5/8" UHS	33480.00	9%	24000	5.550	1039.92	794.80	0.0000	-120.20	100%
		B 1 5/8" UHS	33480.00	9%	24000	5.550	893.46	680.80	0.0000	-28.30	100%
		C 1 5/8" UHS	33480.00	9%	24000	5.550	1141.26	878.80	0.0000	-177.60	100%
414.958	UHS	A 1 1/2" UHS	28440.00	9%	24000	4.730	955.06	794.80	0.0000	-120.20	100%
		B 1 1/2" UHS	28440.00	9%	24000	4.730	809.15	680.80	0.0000	-28.30	100%
		C 1 1/2" UHS	28440.00	9%	24000	4.730	1056.92	878.80	0.0000	-177.60	100%
274.958	UHS	A 1 3/8" UHS	26600.00	10%	24000	3.970	838.56	744.80	0.0000	-117.90	100%
		B 1 3/8" UHS	26600.00	10%	24000	3.970	697.08	630.80	0.0000	-30.00	100%
		C 1 3/8" UHS	26600.00	10%	24000	3.970	945.82	828.80	0.0000	-187.80	100%
134.958	UHS	A 1 1/8" UHS	21528.00	12%	24000	2.660	782.60	744.80	0.0000	-117.90	100%
		B 1 1/8" UHS	21528.00	12%	24000	2.660	648.05	630.80	0.0000	-30.00	100%
		C 1 1/8" UHS	21528.00	12%	24000	2.660	885.50	828.80	0.0000	-187.80	100%

Guy Data *(cont'd)*

Guy Elevation ft	Mount Type	Torque-Arm Spread ft	Torque-Arm Leg Angle °	Torque-Arm Style	Torque-Arm Grade	Torque-Arm Type	Torque-Arm Size
684.292	Corner						

Guy Elevation ft	Mount Type	Torque-Arm Spread ft	Torque-Arm Leg Angle °	Torque-Arm Style	Torque-Arm Grade	Torque-Arm Type	Torque-Arm Size
554.958	Corner						
414.958	Corner						
274.958	Corner						
134.958	Corner						

Guy Data *(cont'd)*

Guy Elevation ft	Diagonal Grade	Diagonal Type	Upper Diagonal Size	Lower Diagonal Size	Is Strap.	Pull-Off Grade	Pull-Off Type	Pull-Off Size
684.29	A572-50 (50 ksi)	Solid Round			No	A572-50 (50 ksi)	Double Equal Angle	2L3x3x3/8
554.96	A572-50 (50 ksi)	Solid Round			No	A572-50 (50 ksi)	Double Equal Angle	2L3x3x3/8
414.96	A572-50 (50 ksi)	Solid Round			No	A572-50 (50 ksi)	Double Equal Angle	2L3x3x3/8
274.96	A572-50 (50 ksi)	Solid Round			No	A572-50 (50 ksi)	Double Equal Angle	2L3x3x3/8
134.96	A572-50 (50 ksi)	Solid Round			No	A572-50 (50 ksi)	Double Equal Angle	2L3x3x3/8

Guy Data *(cont'd)*

Guy Elevation ft	Cable Weight A lb	Cable Weight B lb	Cable Weight C lb	Cable Weight D lb	Tower Intercept A ft	Tower Intercept B ft	Tower Intercept C ft	Tower Intercept D ft
684.292	4477.65	3900.54	4874.91		89.75 16.4 sec/pulse	68.53 14.3 sec/pulse	105.98 17.8 sec/pulse	
554.958	5771.58	4958.71	6333.99		85.08 15.9 sec/pulse	63.24 13.7 sec/pulse	102.05 17.4 sec/pulse	
414.958	4517.43	3827.26	4999.23		72.79 14.7 sec/pulse	52.61 12.5 sec/pulse	88.77 16.3 sec/pulse	
274.958	3329.07	2767.39	3754.90		51.08 12.3 sec/pulse	35.52 10.3 sec/pulse	64.67 13.9 sec/pulse	
134.958	2081.71	1723.80	2355.44		37.33 10.5 sec/pulse	25.73 8.8 sec/pulse	47.59 11.9 sec/pulse	

Guy Data *(cont'd)*

Guy Elevation ft	Calc K Single Angles	Calc K Solid Rounds	Torque Arm K_x	Torque Arm K_y	Pull Off K_x	Pull Off K_y	Diagonal K_x	Diagonal K_y
684.292	No	No			1	1	1	1
554.958	No	No			1	1	1	1

Guy Elevation ft	Calc K Single Angles	Calc K Solid Rounds	Torque Arm K_x	Torque Arm K_y	Pull Off K_x	Pull Off K_y	Diagonal K_x	Diagonal K_y
414.958	No	No			1	1	1	1
274.958	No	No			1	1	1	1
134.958	No	No			1	1	1	1

Guy Data *(cont'd)*

Guy Elevation ft	Torque-Arm Bolt Size in	Torque-Arm Number	Torque-Arm Net Width Deduct in	Torque-Arm U	Pull Off Bolt Size in	Pull Off Number	Pull Off Net Width Deduct in	Pull Off U	Diagonal Bolt Size in	Diagonal Number	Diagonal Net Width Deduct in	Diagonal U
684.292	0.6250 A325N	0	0.0000	0.75	1.0000 A325X	2	0.0000	0.75	0.6250 A325N	0	0.0000	0.75
554.958	0.6250 A325N	0	0.0000	0.75	1.0000 A325X	2	0.0000	0.75	0.6250 A325N	0	0.0000	0.75
414.958	0.6250 A325N	0	0.0000	0.75	1.0000 A325X	2	0.0000	0.75	0.6250 A325N	0	0.0000	0.75
274.958	0.6250 A325N	0	0.0000	0.75	1.0000 A325X	2	0.0000	0.75	0.6250 A325N	0	0.0000	0.75
134.958	0.6250 A325N	0	0.0000	0.75	1.0000 A325X	2	0.0000	0.75	0.6250 A325N	0	0.0000	0.75

Guy Pressures

Guy Elevation ft	Guy Location	z ft	q_z psf	q_z Ice psf	Ice Thickness in
684.292	A	282.05	145		
	B	328.00	151		
	C	253.35	140		
554.958	A	217.38	134		
	B	263.33	142		
	C	188.68	129		
414.958	A	147.38	120		
	B	193.33	130		
	C	118.68	113		
274.958	A	78.53	100		
	B	122.48	114		
	C	43.58	85		
134.958	A	8.53	76		
	B	52.48	90		
	C	-26.42	109		

Guy-Tensioning Information

Temperature At Time Of Tensioning						
0 F	20 F	40 F	60 F	80 F	100 F	120 F

Guy Elevation ft		H ft	V ft	Initial Tension lb	Intercept ft	Initial Tension lb	Intercept ft	Initial Tension lb	Intercept ft	Initial Tension lb	Intercept ft	Initial Tension lb	Intercept ft	Initial Tension lb	Intercept ft	Initial Tension lb	Intercept ft
684.292	A	791.34	804.49	29373	81.66	28408	84.30	27484	87.00	26600	89.75	25756	92.54	24952	95.37	24185	98.23
	B	677.34	712.59	29713	61.64	28648	63.83	27575	66.21	26600	68.53	25667	70.90	24776	73.33	23927	75.81
	C	875.34	861.89	29198	97.00	28292	99.95	27427	102.95	26600	105.98	25811	109.04	25060	112.13	24344	115.24
554.958	A	791.34	675.16	37378	76.58	36004	79.37	34706	82.21	33480	85.08	32324	87.98	31235	90.90	30210	93.83
	B	677.34	583.26	38051	55.91	36440	58.29	34916	60.74	33480	63.24	32051	65.94	30800	68.50	29626	71.09
	C	875.34	732.56	37014	92.74	35769	95.81	34592	98.92	33480	102.05	32430	105.18	31444	108.31	30510	111.45
414.958	A	791.34	535.16	32454	64.07	31048	66.88	29734	69.73	28440	72.79	27315	75.68	26265	78.59	25315	81.42
	B	677.34	443.26	33172	45.30	31485	47.66	29908	50.10	28440	52.61	27079	55.17	25820	57.78	24658	60.41
	C	875.34	592.56	31890	79.50	30665	82.56	29516	85.65	28440	88.77	27433	91.89	26492	95.02	25609	98.16
274.958	A	741.34	392.86	31302	43.56	29627	45.97	28060	48.48	26600	51.08	25247	53.75	23997	56.48	22845	59.25
	B	627.34	304.96	32199	29.43	30212	31.34	28344	33.37	26600	35.52	24987	37.76	23501	40.10	22142	42.51
	C	825.34	462.76	30727	56.19	29257	58.95	27882	61.78	26600	64.67	25409	67.62	24304	70.61	23223	73.79
134.958	A	741.34	252.86	25982	30.99	24415	32.96	22928	35.07	21528	37.33	20219	39.71	19006	42.22	17887	44.82
	B	627.34	164.96	26645	20.81	24857	22.30	23147	23.94	21528	25.73	20010	27.67	18600	29.75	17305	31.95
	C	825.34	322.76	25530	40.23	24118	42.55	22783	45.01	21528	47.59	20356	50.29	19268	53.09	18261	55.96

Feed Line/Linear Appurtenances - Entered As Area

Description	Face or Leg	Allow Shield	Exclude From Torque Calculation	Component Type	Placement ft	Total Number		C_AA_A ft^2/ft	Weight plf
1" Rigid Conduit	A	No	No	CaAa (In Face)	697.00 - 0.00	2	No Ice	0.13	1.13
HJ5-50(7/8")	A	No	No	CaAa (In Face)	697.00 - 0.00	1	No Ice	0.11	0.54
HRL600A (6-1/8 RIGID AIR)	A	No	No	CaAa (Out Of Face)	668.50 - 0.00	1	No Ice	0.61	4.32
HRL600A (6-1/8 RIGID AIR)	A	No	No	CaAa (Out Of Face)	580.00 - 0.00	1	No Ice	0.61	4.32
HRL600A (6-1/8 RIGID AIR)	A	No	No	CaAa (Out Of Face)	498.50 - 0.00	1	No Ice	0.61	4.32
EW63	A	No	No	CaAa (In Face)	350.00 - 0.00	1	No Ice	0.20	0.51
EW63	A	No	No	CaAa (In Face)	100.00 - 0.00	1	No Ice	0.20	0.51
Safety Line 3/8	A	No	No	CaAa (Out Of Face)	697.00 - 0.00	1	No Ice	0.04	0.22
Climbing Ladder	A	No	No	CaAa (Out Of Face)	697.00 - 0.00	1	No Ice	0.50	3.60

Feed Line/Linear Appurtenances Section Areas

Tower Section	Tower Elevation ft	Face	A_R ft^2	A_F ft^2	C_AA_A In Face ft^2	C_AA_A Out Face ft^2	Weight lb
T1	697.00-680.00	A	0.000	0.000	6.358	9.138	112.54
		B	0.000	0.000	0.000	0.000	0.00
		C	0.000	0.000	0.000	0.000	0.00
T2	680.00-660.00	A	0.000	0.000	7.480	15.918	169.12
		B	0.000	0.000	0.000	0.000	0.00
		C	0.000	0.000	0.000	0.000	0.00
T3	660.00-640.00	A	0.000	0.000	7.480	22.910	218.80
		B	0.000	0.000	0.000	0.000	0.00
		C	0.000	0.000	0.000	0.000	0.00

Tower Section	Tower Elevation ft	Face	A_R ft^2	A_F ft^2	C_AA_A In Face ft^2	C_AA_A Out Face ft^2	Weight lb
T4	640.00-620.00	A	0.000	0.000	7.480	22.910	218.80
		B	0.000	0.000	0.000	0.000	0.00
		C	0.000	0.000	0.000	0.000	0.00
T5	620.00-600.00	A	0.000	0.000	7.480	22.910	218.80
		B	0.000	0.000	0.000	0.000	0.00
		C	0.000	0.000	0.000	0.000	0.00
T6	600.00-580.00	A	0.000	0.000	7.480	22.910	218.80
		B	0.000	0.000	0.000	0.000	0.00
		C	0.000	0.000	0.000	0.000	0.00
T7	580.00-560.00	A	0.000	0.000	7.480	35.070	305.20
		B	0.000	0.000	0.000	0.000	0.00
		C	0.000	0.000	0.000	0.000	0.00
T8	560.00-540.00	A	0.000	0.000	7.480	35.070	305.20
		B	0.000	0.000	0.000	0.000	0.00
		C	0.000	0.000	0.000	0.000	0.00
T9	540.00-520.00	A	0.000	0.000	7.480	35.070	305.20
		B	0.000	0.000	0.000	0.000	0.00
		C	0.000	0.000	0.000	0.000	0.00
T10	520.00-500.00	A	0.000	0.000	7.480	35.070	305.20
		B	0.000	0.000	0.000	0.000	0.00
		C	0.000	0.000	0.000	0.000	0.00
T11	500.00-480.00	A	0.000	0.000	7.480	46.318	385.12
		B	0.000	0.000	0.000	0.000	0.00
		C	0.000	0.000	0.000	0.000	0.00
T12	480.00-460.00	A	0.000	0.000	7.480	47.230	391.60
		B	0.000	0.000	0.000	0.000	0.00
		C	0.000	0.000	0.000	0.000	0.00
T13	460.00-440.00	A	0.000	0.000	7.480	47.230	391.60
		B	0.000	0.000	0.000	0.000	0.00
		C	0.000	0.000	0.000	0.000	0.00
T14	440.00-420.00	A	0.000	0.000	7.480	47.230	391.60
		B	0.000	0.000	0.000	0.000	0.00
		C	0.000	0.000	0.000	0.000	0.00
T15	420.00-400.00	A	0.000	0.000	7.480	47.230	391.60
		B	0.000	0.000	0.000	0.000	0.00
		C	0.000	0.000	0.000	0.000	0.00
T16	400.00-380.00	A	0.000	0.000	7.480	47.230	391.60
		B	0.000	0.000	0.000	0.000	0.00
		C	0.000	0.000	0.000	0.000	0.00
T17	380.00-360.00	A	0.000	0.000	7.480	47.230	391.60
		B	0.000	0.000	0.000	0.000	0.00
		C	0.000	0.000	0.000	0.000	0.00
T18	360.00-340.00	A	0.000	0.000	9.490	47.230	396.70
		B	0.000	0.000	0.000	0.000	0.00
		C	0.000	0.000	0.000	0.000	0.00
T19	340.00-320.00	A	0.000	0.000	11.500	47.230	401.80
		B	0.000	0.000	0.000	0.000	0.00
		C	0.000	0.000	0.000	0.000	0.00
T20	320.00-300.00	A	0.000	0.000	11.500	47.230	401.80
		B	0.000	0.000	0.000	0.000	0.00
		C	0.000	0.000	0.000	0.000	0.00
T21	300.00-280.00	A	0.000	0.000	11.500	47.230	401.80
		B	0.000	0.000	0.000	0.000	0.00
		C	0.000	0.000	0.000	0.000	0.00
T22	280.00-260.00	A	0.000	0.000	11.500	47.230	401.80
		B	0.000	0.000	0.000	0.000	0.00
		C	0.000	0.000	0.000	0.000	0.00
T23	260.00-240.00	A	0.000	0.000	11.500	47.230	401.80
		B	0.000	0.000	0.000	0.000	0.00
		C	0.000	0.000	0.000	0.000	0.00
T24	240.00-220.00	A	0.000	0.000	11.500	47.230	401.80

Tower Section	Tower Elevation ft	Face	A_R ft^2	A_F ft^2	C_AA_A In Face ft^2	C_AA_A Out Face ft^2	Weight lb
		B	0.000	0.000	0.000	0.000	0.00
		C	0.000	0.000	0.000	0.000	0.00
T25	220.00-200.00	A	0.000	0.000	11.500	47.230	401.80
		B	0.000	0.000	0.000	0.000	0.00
		C	0.000	0.000	0.000	0.000	0.00
T26	200.00-180.00	A	0.000	0.000	11.500	47.230	401.80
		B	0.000	0.000	0.000	0.000	0.00
		C	0.000	0.000	0.000	0.000	0.00
T27	180.00-160.00	A	0.000	0.000	11.500	47.230	401.80
		B	0.000	0.000	0.000	0.000	0.00
		C	0.000	0.000	0.000	0.000	0.00
T28	160.00-140.00	A	0.000	0.000	11.500	47.230	401.80
		B	0.000	0.000	0.000	0.000	0.00
		C	0.000	0.000	0.000	0.000	0.00
T29	140.00-120.00	A	0.000	0.000	11.500	47.230	401.80
		B	0.000	0.000	0.000	0.000	0.00
		C	0.000	0.000	0.000	0.000	0.00
T30	120.00-100.00	A	0.000	0.000	11.500	47.230	401.80
		B	0.000	0.000	0.000	0.000	0.00
		C	0.000	0.000	0.000	0.000	0.00
T31	100.00-80.00	A	0.000	0.000	15.520	47.230	412.00
		B	0.000	0.000	0.000	0.000	0.00
		C	0.000	0.000	0.000	0.000	0.00
T32	80.00-60.00	A	0.000	0.000	15.520	47.230	412.00
		B	0.000	0.000	0.000	0.000	0.00
		C	0.000	0.000	0.000	0.000	0.00
T33	60.00-40.00	A	0.000	0.000	15.520	47.230	412.00
		B	0.000	0.000	0.000	0.000	0.00
		C	0.000	0.000	0.000	0.000	0.00
T34	40.00-20.00	A	0.000	0.000	15.520	47.230	412.00
		B	0.000	0.000	0.000	0.000	0.00
		C	0.000	0.000	0.000	0.000	0.00
T35	20.00-10.00	A	0.000	0.000	7.760	23.615	206.00
		B	0.000	0.000	0.000	0.000	0.00
		C	0.000	0.000	0.000	0.000	0.00
T36	10.00-0.00	A	0.000	0.000	7.760	23.615	206.00
		B	0.000	0.000	0.000	0.000	0.00
		C	0.000	0.000	0.000	0.000	0.00

Feed Line Center of Pressure

Section	Elevation ft	CP_X in	CP_Z in	CP_X Ice in	CP_Z Ice in
T1	697.00-680.00	-1.4856	-9.4780	-1.3837	-8.8009
T2	680.00-660.00	-1.4428	-13.0962	-1.3409	-12.1406
T3	660.00-640.00	-1.3167	-16.8107	-1.2279	-15.6428
T4	640.00-620.00	-1.3346	-17.0513	-1.2418	-15.8280
T5	620.00-600.00	-1.3167	-16.8107	-1.2279	-15.6428
T6	600.00-580.00	-1.2994	-16.5790	-1.2145	-15.4636
T7	580.00-560.00	-1.0751	-20.5418	-1.0174	-19.4134
T8	560.00-540.00	-1.0557	-20.1828	-1.0015	-19.1219
T9	540.00-520.00	-1.0536	-20.1123	-0.9969	-19.0047
T10	520.00-500.00	-1.0761	-20.5599	-1.0147	-19.3575
T11	500.00-480.00	-0.9539	-23.8268	-0.9034	-22.5373
T12	480.00-460.00	-0.9348	-23.7836	-0.8872	-22.5457
T13	460.00-440.00	-0.9176	-23.3301	-0.8734	-22.1838
T14	440.00-420.00	-0.9019	-22.9141	-0.8584	-21.7868

Section	Elevation	CP_X	CP_Z	CP_X Ice	CP_Z Ice
	ft	in	in	in	in
T15	420.00-400.00	-0.8963	-22.7898	-0.8536	-21.6830
T16	400.00-380.00	-0.9183	-23.3449	-0.8714	-22.1286
T17	380.00-360.00	-0.9268	-23.5692	-0.8781	-22.3057
T18	360.00-340.00	-1.1706	-23.6112	-1.1082	-22.3260
T19	340.00-320.00	-1.3865	-23.2068	-1.3156	-21.9951
T20	320.00-300.00	-1.3741	-22.9919	-1.3058	-21.8251
T21	300.00-280.00	-1.3503	-22.5790	-1.2868	-21.4965
T22	280.00-260.00	-1.3420	-22.4598	-1.2798	-21.3966
T23	260.00-240.00	-1.3294	-22.2102	-1.2603	-21.0357
T24	240.00-220.00	-1.3407	-22.4054	-1.2691	-21.1869
T25	220.00-200.00	-1.3641	-22.8112	-1.2872	-21.4992
T26	200.00-180.00	-1.3641	-22.8112	-1.2872	-21.4992
T27	180.00-160.00	-1.3522	-22.6057	-1.2780	-21.3414
T28	160.00-140.00	-1.3294	-22.2102	-1.2603	-21.0357
T29	140.00-120.00	-1.3215	-22.0968	-1.2538	-20.9428
T30	120.00-100.00	-1.3522	-22.6057	-1.2780	-21.3414
T31	100.00-80.00	-1.7935	-22.4842	-1.6947	-21.2232
T32	80.00-60.00	-1.7783	-22.2870	-1.6830	-21.0713
T33	60.00-40.00	-1.7489	-21.9071	-1.6603	-20.7768
T34	40.00-20.00	-1.7397	-21.7894	-1.6603	-20.7768
T35	20.00-10.00	-1.7129	-21.4422	-1.6389	-20.4997
T36	10.00-0.00	-0.8852	-12.1155	-0.8694	-11.8928

Shielding Factor Ka

Tower Section	Feed Line Record No.	Description	Feed Line Segment Elev.	K_a No Ice	K_a Ice
T1	1	1" Rigid Conduit	680.00 - 697.00	0.6000	0.6000
T1	2	HJ5-50(7/8")	680.00 - 697.00	0.6000	0.6000
T2	1	1" Rigid Conduit	660.00 - 680.00	0.6000	0.6000
T2	2	HJ5-50(7/8")	660.00 - 680.00	0.6000	0.6000
T3	1	1" Rigid Conduit	640.00 - 660.00	0.6000	0.6000
T3	2	HJ5-50(7/8")	640.00 - 660.00	0.6000	0.6000
T4	1	1" Rigid Conduit	620.00 - 640.00	0.6000	0.6000
T4	2	HJ5-50(7/8")	620.00 - 640.00	0.6000	0.6000
T5	1	1" Rigid Conduit	600.00 - 620.00	0.6000	0.6000
T5	2	HJ5-50(7/8")	600.00 - 620.00	0.6000	0.6000
T6	1	1" Rigid Conduit	580.00 - 600.00	0.6000	0.6000
T6	2	HJ5-50(7/8")	580.00 - 600.00	0.6000	0.6000
T7	1	1" Rigid Conduit	560.00 - 580.00	0.6000	0.6000
T7	2	HJ5-50(7/8")	560.00 - 580.00	0.6000	0.6000

Tower Section	Feed Line Record No.	Description	Feed Line Segment Elev.	K_a No Ice	K_a Ice
T8	1	1" Rigid Conduit	540.00 - 560.00	0.6000	0.6000
T8	2	HJ5-50(7/8")	540.00 - 560.00	0.6000	0.6000
T9	1	1" Rigid Conduit	520.00 - 540.00	0.6000	0.6000
T9	2	HJ5-50(7/8")	520.00 - 540.00	0.6000	0.6000
T10	1	1" Rigid Conduit	500.00 - 520.00	0.6000	0.6000
T10	2	HJ5-50(7/8")	500.00 - 520.00	0.6000	0.6000
T11	1	1" Rigid Conduit	480.00 - 500.00	0.6000	0.6000
T11	2	HJ5-50(7/8")	480.00 - 500.00	0.6000	0.6000
T12	1	1" Rigid Conduit	460.00 - 480.00	0.6000	0.6000
T12	2	HJ5-50(7/8")	460.00 - 480.00	0.6000	0.6000
T13	1	1" Rigid Conduit	440.00 - 460.00	0.6000	0.6000
T13	2	HJ5-50(7/8")	440.00 - 460.00	0.6000	0.6000
T14	1	1" Rigid Conduit	420.00 - 440.00	0.6000	0.6000
T14	2	HJ5-50(7/8")	420.00 - 440.00	0.6000	0.6000
T15	1	1" Rigid Conduit	400.00 - 420.00	0.6000	0.6000
T15	2	HJ5-50(7/8")	400.00 - 420.00	0.6000	0.6000
T16	1	1" Rigid Conduit	380.00 - 400.00	0.6000	0.6000
T16	2	HJ5-50(7/8")	380.00 - 400.00	0.6000	0.6000
T17	1	1" Rigid Conduit	360.00 - 380.00	0.6000	0.6000
T17	2	HJ5-50(7/8")	360.00 - 380.00	0.6000	0.6000
T18	1	1" Rigid Conduit	340.00 - 360.00	0.6000	0.6000
T18	2	HJ5-50(7/8")	340.00 - 360.00	0.6000	0.6000
T18	6	EW63	340.00 - 350.00	0.6000	0.6000
T19	1	1" Rigid Conduit	320.00 - 340.00	0.6000	0.6000
T19	2	HJ5-50(7/8")	320.00 - 340.00	0.6000	0.6000
T19	6	EW63	320.00 - 340.00	0.6000	0.6000
T20	1	1" Rigid Conduit	300.00 - 320.00	0.6000	0.6000
T20	2	HJ5-50(7/8")	300.00 - 320.00	0.6000	0.6000
T20	6	EW63	300.00 - 320.00	0.6000	0.6000
T21	1	1" Rigid Conduit	280.00 - 300.00	0.6000	0.6000
T21	2	HJ5-50(7/8")	280.00 - 300.00	0.6000	0.6000

Tower Section	Feed Line Record No.	Description	Feed Line Segment Elev.	K_a No Ice	K_a Ice
T21	6	EW63	280.00 - 300.00	0.6000	0.6000
T22	1	1" Rigid Conduit	260.00 - 280.00	0.6000	0.6000
T22	2	HJ5-50(7/8")	260.00 - 280.00	0.6000	0.6000
T22	6	EW63	260.00 - 280.00	0.6000	0.6000
T23	1	1" Rigid Conduit	240.00 - 260.00	0.6000	0.6000
T23	2	HJ5-50(7/8")	240.00 - 260.00	0.6000	0.6000
T23	6	EW63	240.00 - 260.00	0.6000	0.6000
T24	1	1" Rigid Conduit	220.00 - 240.00	0.6000	0.6000
T24	2	HJ5-50(7/8")	220.00 - 240.00	0.6000	0.6000
T24	6	EW63	220.00 - 240.00	0.6000	0.6000
T25	1	1" Rigid Conduit	200.00 - 220.00	0.6000	0.6000
T25	2	HJ5-50(7/8")	200.00 - 220.00	0.6000	0.6000
T25	6	EW63	200.00 - 220.00	0.6000	0.6000
T26	1	1" Rigid Conduit	180.00 - 200.00	0.6000	0.6000
T26	2	HJ5-50(7/8")	180.00 - 200.00	0.6000	0.6000
T26	6	EW63	180.00 - 200.00	0.6000	0.6000
T27	1	1" Rigid Conduit	160.00 - 180.00	0.6000	0.6000
T27	2	HJ5-50(7/8")	160.00 - 180.00	0.6000	0.6000
T27	6	EW63	160.00 - 180.00	0.6000	0.6000
T28	1	1" Rigid Conduit	140.00 - 160.00	0.6000	0.6000
T28	2	HJ5-50(7/8")	140.00 - 160.00	0.6000	0.6000
T28	6	EW63	140.00 - 160.00	0.6000	0.6000
T29	1	1" Rigid Conduit	120.00 - 140.00	0.6000	0.6000
T29	2	HJ5-50(7/8")	120.00 - 140.00	0.6000	0.6000
T29	6	EW63	120.00 - 140.00	0.6000	0.6000
T30	1	1" Rigid Conduit	100.00 - 120.00	0.6000	0.6000
T30	2	HJ5-50(7/8")	100.00 - 120.00	0.6000	0.6000
T30	6	EW63	100.00 - 120.00	0.6000	0.6000
T31	1	1" Rigid Conduit	80.00 - 100.00	0.6000	0.6000
T31	2	HJ5-50(7/8")	80.00 - 100.00	0.6000	0.6000
T31	6	EW63	80.00 - 100.00	0.6000	0.6000
T31	7	EW63	80.00 - 100.00	0.6000	0.6000
T32	1	1" Rigid Conduit	60.00 - 80.00	0.6000	0.6000
T32	2	HJ5-50(7/8")	60.00 - 80.00	0.6000	0.6000

Tower Section	Feed Line Record No.	Description	Feed Line Segment Elev.	K_a No Ice	K_a Ice
T32	6	EW63	60.00 - 80.00	0.6000	0.6000
T32	7	EW63	60.00 - 80.00	0.6000	0.6000
T33	1	1" Rigid Conduit	40.00 - 60.00	0.6000	0.6000
T33	2	HJ5-50(7/8")	40.00 - 60.00	0.6000	0.6000
T33	6	EW63	40.00 - 60.00	0.6000	0.6000
T33	7	EW63	40.00 - 60.00	0.6000	0.6000
T34	1	1" Rigid Conduit	20.00 - 40.00	0.6000	0.6000
T34	2	HJ5-50(7/8")	20.00 - 40.00	0.6000	0.6000
T34	6	EW63	20.00 - 40.00	0.6000	0.6000
T34	7	EW63	20.00 - 40.00	0.6000	0.6000
T35	1	1" Rigid Conduit	10.00 - 20.00	0.6000	0.6000
T35	2	HJ5-50(7/8")	10.00 - 20.00	0.6000	0.6000
T35	6	EW63	10.00 - 20.00	0.6000	0.6000
T35	7	EW63	10.00 - 20.00	0.6000	0.6000
T36	1	1" Rigid Conduit	0.00 - 10.00	0.5534	0.5534
T36	2	HJ5-50(7/8")	0.00 - 10.00	0.5534	0.5534
T36	6	EW63	0.00 - 10.00	0.5534	0.5534
T36	7	EW63	0.00 - 10.00	0.5534	0.5534

Discrete Tower Loads

Description	Face or Leg	Offset Type	Offsets: Horz Lateral Vert ft ft ft	Azimuth Adjustment °	Placement ft		C_AA_A Front ft^2	C_AA_A Side ft^2	Weight lb
UltraScan DR-II	A	From Face	2.50 0.00 0.00	0.0000	697.00	No Ice	4.00	4.00	100.00
24"x24"x12" Strobe Light	A	None		0.0000	700.50	No Ice	5.60	2.80	40.00
(2) 24"x24"x12" Strobe Light	A	None		0.0000	351.00 - 350.00	No Ice	5.60	2.80	40.00
UltraScan Face Mount	A	From Face	2.00 0.00 0.00	0.0000	697.00	No Ice	5.00	5.00	150.00
3' Beacon Extension	A	None		0.0000	697.00	No Ice	0.60	0.60	30.00
TFU-26JSC/VP-RCT150	A	From Leg	2.50 0.00 0.00	0.0000	695.00 - 642.00	No Ice	67.70	67.70	1700.00
JHPC-10	A	From Leg	2.50 0.00 0.00	0.0000	625.00 - 535.00	No Ice	66.87	66.87	825.00
TFU-26JSC/VP-RCT150	A	From Leg	2.50 0.00 0.00	0.0000	525.00 - 472.00	No Ice	67.70	67.70	1700.00
Antenna Side Mounts	A	From Leg	1.00 0.00 0.00	0.0000	695.00 - 642.00	No Ice	5.00	5.00	150.00
Antenna Side Mounts	A	From Leg	1.00 0.00 0.00	0.0000	525.00 - 472.00	No Ice	5.00	5.00	150.00
Elbow Complex	A	From Leg	0.00 0.00 0.00	0.0000	668.00	No Ice	3.00	3.00	50.00

Description	Face or Leg	Offset Type	Offsets: Horz Lateral Vert ft ft ft	Azimuth Adjustment °	Placement ft		C_AA_A Front ft^2	C_AA_A Side ft^2	Weight lb
Elbow Complex	A	From Leg	0.00 0.00 0.00	0.0000	580.00	No Ice	3.00	3.00	50.00
Elbow Complex	A	From Leg	0.00 0.00 0.00	0.0000	498.00	No Ice	3.00	3.00	50.00

Dishes

Description	Face or Leg	Dish Type	Offset Type	Offsets: Horz Lateral Vert ft	Azimuth Adjustment °	3 dB Beam Width °	Elevation ft	Outside Diameter ft		Aperture Area ft^2	Weight lb
HP6-65	A	Paraboloid w/Shroud (HP)	From Leg	1.50 0.00 0.00	-23.0000		350.00	6.00	No Ice	28.27	143.00
HP6-65	A	Paraboloid w/Shroud (HP)	From Leg	1.50 0.00 0.00	-23.0000		100.00	6.00	No Ice	28.27	143.00

Tower Pressures - No Ice

$G_H = 0.850$

Section Elevation ft	z ft	K_Z	q_z psf	A_G ft^2	Face	A_F ft^2	A_R ft^2	A_{leg} ft^2	Leg % %	C_AA_A In Face ft^2	C_AA_A Out Face ft^2
T1 697.00-680.00	688.50	1.715	187	106.958	A B C	4.995 4.995 4.995	15.727 15.727 15.727	9.917	47.86 47.86 47.86	6.358 0.000 0.000	9.138 0.000 0.000
T2 680.00-660.00	670.00	1.702	185	125.833	A B C	4.757 4.757 4.757	17.838 17.838 17.838	11.667	51.63 51.63 51.63	7.480 0.000 0.000	15.918 0.000 0.000
T3 660.00-640.00	650.00	1.687	184	125.833	A B C	4.757 4.757 4.757	16.604 16.604 16.604	11.667	54.62 54.62 54.62	7.480 0.000 0.000	22.910 0.000 0.000
T4 640.00-620.00	630.00	1.672	182	125.833	A B C	4.757 4.757 4.757	15.986 15.986 15.986	11.667	56.24 56.24 56.24	7.480 0.000 0.000	22.910 0.000 0.000
T5 620.00-600.00	610.00	1.657	180	125.833	A B C	4.757 4.757 4.757	16.604 16.604 16.604	11.667	54.62 54.62 54.62	7.480 0.000 0.000	22.910 0.000 0.000
T6 600.00-580.00	590.00	1.641	179	125.833	A B C	4.757 4.757 4.757	17.221 17.221 17.221	11.667	53.08 53.08 53.08	7.480 0.000 0.000	22.910 0.000 0.000

Section Elevation ft	z ft	K_Z	q_z psf	A_G ft²	Face	A_F ft²	A_R ft²	A_{leg} ft²	Leg %	C_AA_A In Face ft²	C_AA_A Out Face ft²
T7	570.00	1.625	177	125.833	A	4.757	17.838	11.667	51.63	7.480	35.070
580.00-560.00					B	4.757	17.838		51.63	0.000	0.000
					C	4.757	17.838		51.63	0.000	0.000
T8	550.00	1.608	175	125.833	A	4.995	18.455	11.667	49.75	7.480	35.070
560.00-540.00					B	4.995	18.455		49.75	0.000	0.000
					C	4.995	18.455		49.75	0.000	0.000
T9	530.00	1.591	173	126.250	A	4.740	19.263	12.500	52.08	7.480	35.070
540.00-520.00					B	4.740	19.263		52.08	0.000	0.000
					C	4.740	19.263		52.08	0.000	0.000
T10	510.00	1.574	171	126.250	A	4.740	18.034	12.500	54.89	7.480	35.070
520.00-500.00					B	4.740	18.034		54.89	0.000	0.000
					C	4.740	18.034		54.89	0.000	0.000
T11	490.00	1.556	170	126.250	A	4.740	16.804	12.500	58.02	7.480	46.318
500.00-480.00					B	4.740	16.804		58.02	0.000	0.000
					C	4.740	16.804		58.02	0.000	0.000
T12	470.00	1.538	168	126.250	A	4.740	17.419	12.500	56.41	7.480	47.230
480.00-460.00					B	4.740	17.419		56.41	0.000	0.000
					C	4.740	17.419		56.41	0.000	0.000
T13	450.00	1.519	165	126.250	A	4.740	18.649	12.500	53.45	7.480	47.230
460.00-440.00					B	4.740	18.649		53.45	0.000	0.000
					C	4.740	18.649		53.45	0.000	0.000
T14	430.00	1.499	163	126.667	A	4.722	20.072	13.333	53.78	7.480	47.230
440.00-420.00					B	4.722	20.072		53.78	0.000	0.000
					C	4.722	20.072		53.78	0.000	0.000
T15	410.00	1.479	161	126.667	A	4.958	20.072	13.333	53.27	7.480	47.230
420.00-400.00					B	4.958	20.072		53.27	0.000	0.000
					C	4.958	20.072		53.27	0.000	0.000
T16	390.00	1.458	159	126.667	A	4.722	18.847	13.333	56.57	7.480	47.230
400.00-380.00					B	4.722	18.847		56.57	0.000	0.000
					C	4.722	18.847		56.57	0.000	0.000
T17	370.00	1.436	156	126.667	A	4.722	18.234	13.333	58.08	7.480	47.230
380.00-360.00					B	4.722	18.234		58.08	0.000	0.000
					C	4.722	18.234		58.08	0.000	0.000
T18	350.00	1.414	154	126.667	A	4.722	17.622	13.333	59.67	9.490	47.230
360.00-340.00					B	4.722	17.622		59.67	0.000	0.000
					C	4.722	17.622		59.67	0.000	0.000
T19	330.00	1.39	151	126.667	A	4.722	18.234	13.333	58.08	11.500	47.230
340.00-320.00					B	4.722	18.234		58.08	0.000	0.000
					C	4.722	18.234		58.08	0.000	0.000
T20	310.00	1.365	149	126.667	A	4.722	18.847	13.333	56.57	11.500	47.230
320.00-300.00					B	4.722	18.847		56.57	0.000	0.000
					C	4.722	18.847		56.57	0.000	0.000
T21	290.00	1.34	146	126.667	A	4.722	20.072	13.333	53.78	11.500	47.230
300.00-280.00					B	4.722	20.072		53.78	0.000	0.000
					C	4.722	20.072		53.78	0.000	0.000
T22	270.00	1.313	143	126.667	A	4.958	20.072	13.333	53.27	11.500	47.230
280.00-260.00					B	4.958	20.072		53.27	0.000	0.000
					C	4.958	20.072		53.27	0.000	0.000
T23	250.00	1.284	140	127.917	A	4.670	21.892	15.833	59.61	11.500	47.230
260.00-240.00					B	4.670	21.892		59.61	0.000	0.000
					C	4.670	21.892		59.61	0.000	0.000
T24	230.00	1.254	137	127.917	A	4.670	21.286	15.833	61.00	11.500	47.230
240.00-220.00					B	4.670	21.286		61.00	0.000	0.000
					C	4.670	21.286		61.00	0.000	0.000
T25	210.00	1.222	133	127.917	A	4.670	20.074	15.833	63.99	11.500	47.230
220.00-200.00					B	4.670	20.074		63.99	0.000	0.000
					C	4.670	20.074		63.99	0.000	0.000
T26	190.00	1.187	129	127.917	A	4.670	20.074	15.833	63.99	11.500	47.230
200.00-180.00					B	4.670	20.074		63.99	0.000	0.000
					C	4.670	20.074		63.99	0.000	0.000

Section Elevation ft	z ft	K_Z	q_z psf	A_G ft²	Face	A_F ft²	A_R ft²	A_{leg} ft²	Leg %	C_AA_A In Face ft²	C_AA_A Out Face ft²
T27	170.00	1.15	125	127.917	A	4.670	20.680	15.833	62.46	11.500	47.230
180.00-160.00					B	4.670	20.680		62.46	0.000	0.000
					C	4.670	20.680		62.46	0.000	0.000
T28	150.00	1.11	121	127.917	A	4.670	21.892	15.833	59.61	11.500	47.230
160.00-140.00					B	4.670	21.892		59.61	0.000	0.000
					C	4.670	21.892		59.61	0.000	0.000
T29	130.00	1.065	116	127.917	A	4.904	21.892	15.833	59.09	11.500	47.230
140.00-120.00					B	4.904	21.892		59.09	0.000	0.000
					C	4.904	21.892		59.09	0.000	0.000
T30	110.00	1.016	111	127.917	A	4.670	20.680	15.833	62.46	11.500	47.230
120.00-100.00					B	4.670	20.680		62.46	0.000	0.000
					C	4.670	20.680		62.46	0.000	0.000
T31	90.00	0.959	104	127.917	A	4.670	20.074	15.833	63.99	15.520	47.230
100.00-80.00					B	4.670	20.074		63.99	0.000	0.000
					C	4.670	20.074		63.99	0.000	0.000
T32	70.00	0.892	97	127.917	A	4.670	20.680	15.833	62.46	15.520	47.230
80.00-60.00					B	4.670	20.680		62.46	0.000	0.000
					C	4.670	20.680		62.46	0.000	0.000
T33	50.00	0.811	88	127.917	A	4.670	21.892	15.833	59.61	15.520	47.230
60.00-40.00					B	4.670	21.892		59.61	0.000	0.000
					C	4.670	21.892		59.61	0.000	0.000
T34	30.00	0.701	76	127.917	A	4.670	21.892	15.833	59.61	15.520	47.230
40.00-20.00					B	4.670	21.892		59.61	0.000	0.000
					C	4.670	21.892		59.61	0.000	0.000
T35	15.00	0.7	76	63.958	A	2.335	11.539	7.917	57.06	7.760	23.615
20.00-10.00					B	2.335	11.539		57.06	0.000	0.000
					C	2.335	11.539		57.06	0.000	0.000
T36 10.00-0.00	5.00	0.7	76	35.220	A	5.145	10.583	10.583	67.29	7.760	23.615
					B	5.145	10.583		67.29	0.000	0.000
					C	5.145	10.583		67.29	0.000	0.000

Tower Pressure - Service

$G_H = 0.850$

Section Elevation ft	z ft	K_Z	q_z psf	A_G ft²	Face	A_F ft²	A_R ft²	A_{leg} ft²	Leg %	C_AA_A In Face ft²	C_AA_A Out Face ft²
T1	688.50	1.715	12	106.958	A	4.995	15.727	9.917	47.86	6.358	9.138
697.00-680.00					B	4.995	15.727		47.86	0.000	0.000
					C	4.995	15.727		47.86	0.000	0.000
T2	670.00	1.702	12	125.833	A	4.757	17.838	11.667	51.63	7.480	15.918
680.00-660.00					B	4.757	17.838		51.63	0.000	0.000
					C	4.757	17.838		51.63	0.000	0.000
T3	650.00	1.687	12	125.833	A	4.757	16.604	11.667	54.62	7.480	22.910
660.00-640.00					B	4.757	16.604		54.62	0.000	0.000
					C	4.757	16.604		54.62	0.000	0.000
T4	630.00	1.672	12	125.833	A	4.757	15.986	11.667	56.24	7.480	22.910
640.00-620.00					B	4.757	15.986		56.24	0.000	0.000
					C	4.757	15.986		56.24	0.000	0.000
T5	610.00	1.657	12	125.833	A	4.757	16.604	11.667	54.62	7.480	22.910
620.00-600.00					B	4.757	16.604		54.62	0.000	0.000
					C	4.757	16.604		54.62	0.000	0.000
T6	590.00	1.641	12	125.833	A	4.757	17.221	11.667	53.08	7.480	22.910
600.00-580.00					B	4.757	17.221		53.08	0.000	0.000

Section Elevation ft	z ft	K_Z	q_z psf	A_G ft²	Face	A_F ft²	A_R ft²	A_{leg} ft²	Leg %	C_AA_A In Face ft²	C_AA_A Out Face ft²
					C	4.757	17.221		53.08	0.000	0.000
T7	570.00	1.625	11	125.833	A	4.757	17.838	11.667	51.63	7.480	35.070
580.00-560.00					B	4.757	17.838		51.63	0.000	0.000
					C	4.757	17.838		51.63	0.000	0.000
T8	550.00	1.608	11	125.833	A	4.995	18.455	11.667	49.75	7.480	35.070
560.00-540.00					B	4.995	18.455		49.75	0.000	0.000
					C	4.995	18.455		49.75	0.000	0.000
T9	530.00	1.591	11	126.250	A	4.740	19.263	12.500	52.08	7.480	35.070
540.00-520.00					B	4.740	19.263		52.08	0.000	0.000
					C	4.740	19.263		52.08	0.000	0.000
T10	510.00	1.574	11	126.250	A	4.740	18.034	12.500	54.89	7.480	35.070
520.00-500.00					B	4.740	18.034		54.89	0.000	0.000
					C	4.740	18.034		54.89	0.000	0.000
T11	490.00	1.556	11	126.250	A	4.740	16.804	12.500	58.02	7.480	46.318
500.00-480.00					B	4.740	16.804		58.02	0.000	0.000
					C	4.740	16.804		58.02	0.000	0.000
T12	470.00	1.538	11	126.250	A	4.740	17.419	12.500	56.41	7.480	47.230
480.00-460.00					B	4.740	17.419		56.41	0.000	0.000
					C	4.740	17.419		56.41	0.000	0.000
T13	450.00	1.519	11	126.250	A	4.740	18.649	12.500	53.45	7.480	47.230
460.00-440.00					B	4.740	18.649		53.45	0.000	0.000
					C	4.740	18.649		53.45	0.000	0.000
T14	430.00	1.499	11	126.667	A	4.722	20.072	13.333	53.78	7.480	47.230
440.00-420.00					B	4.722	20.072		53.78	0.000	0.000
					C	4.722	20.072		53.78	0.000	0.000
T15	410.00	1.479	10	126.667	A	4.958	20.072	13.333	53.27	7.480	47.230
420.00-400.00					B	4.958	20.072		53.27	0.000	0.000
					C	4.958	20.072		53.27	0.000	0.000
T16	390.00	1.458	10	126.667	A	4.722	18.847	13.333	56.57	7.480	47.230
400.00-380.00					B	4.722	18.847		56.57	0.000	0.000
					C	4.722	18.847		56.57	0.000	0.000
T17	370.00	1.436	10	126.667	A	4.722	18.234	13.333	58.08	7.480	47.230
380.00-360.00					B	4.722	18.234		58.08	0.000	0.000
					C	4.722	18.234		58.08	0.000	0.000
T18	350.00	1.414	10	126.667	A	4.722	17.622	13.333	59.67	9.490	47.230
360.00-340.00					B	4.722	17.622		59.67	0.000	0.000
					C	4.722	17.622		59.67	0.000	0.000
T19	330.00	1.39	10	126.667	A	4.722	18.234	13.333	58.08	11.500	47.230
340.00-320.00					B	4.722	18.234		58.08	0.000	0.000
					C	4.722	18.234		58.08	0.000	0.000
T20	310.00	1.365	10	126.667	A	4.722	18.847	13.333	56.57	11.500	47.230
320.00-300.00					B	4.722	18.847		56.57	0.000	0.000
					C	4.722	18.847		56.57	0.000	0.000
T21	290.00	1.34	9	126.667	A	4.722	20.072	13.333	53.78	11.500	47.230
300.00-280.00					B	4.722	20.072		53.78	0.000	0.000
					C	4.722	20.072		53.78	0.000	0.000
T22	270.00	1.313	9	126.667	A	4.958	20.072	13.333	53.27	11.500	47.230
280.00-260.00					B	4.958	20.072		53.27	0.000	0.000
					C	4.958	20.072		53.27	0.000	0.000
T23	250.00	1.284	9	127.917	A	4.670	21.892	15.833	59.61	11.500	47.230
260.00-240.00					B	4.670	21.892		59.61	0.000	0.000
					C	4.670	21.892		59.61	0.000	0.000
T24	230.00	1.254	9	127.917	A	4.670	21.286	15.833	61.00	11.500	47.230
240.00-220.00					B	4.670	21.286		61.00	0.000	0.000
					C	4.670	21.286		61.00	0.000	0.000
T25	210.00	1.222	9	127.917	A	4.670	20.074	15.833	63.99	11.500	47.230
220.00-200.00					B	4.670	20.074		63.99	0.000	0.000
					C	4.670	20.074		63.99	0.000	0.000
T26	190.00	1.187	8	127.917	A	4.670	20.074	15.833	63.99	11.500	47.230
200.00-180.00					B	4.670	20.074		63.99	0.000	0.000

Section Elevation ft	z ft	K_Z	q_z psf	A_G ft²	Face	A_F ft²	A_R ft²	A_{leg} ft²	Leg %	C_AA_A In Face ft²	C_AA_A Out Face ft²
					C	4.670	20.074		63.99	0.000	0.000
T27	170.00	1.15	8	127.917	A	4.670	20.680	15.833	62.46	11.500	47.230
180.00-160.00					B	4.670	20.680		62.46	0.000	0.000
					C	4.670	20.680		62.46	0.000	0.000
T28	150.00	1.11	8	127.917	A	4.670	21.892	15.833	59.61	11.500	47.230
160.00-140.00					B	4.670	21.892		59.61	0.000	0.000
					C	4.670	21.892		59.61	0.000	0.000
T29	130.00	1.065	7	127.917	A	4.904	21.892	15.833	59.09	11.500	47.230
140.00-120.00					B	4.904	21.892		59.09	0.000	0.000
					C	4.904	21.892		59.09	0.000	0.000
T30	110.00	1.016	7	127.917	A	4.670	20.680	15.833	62.46	11.500	47.230
120.00-100.00					B	4.670	20.680		62.46	0.000	0.000
					C	4.670	20.680		62.46	0.000	0.000
T31	90.00	0.959	7	127.917	A	4.670	20.074	15.833	63.99	15.520	47.230
100.00-80.00					B	4.670	20.074		63.99	0.000	0.000
					C	4.670	20.074		63.99	0.000	0.000
T32	70.00	0.892	6	127.917	A	4.670	20.680	15.833	62.46	15.520	47.230
80.00-60.00					B	4.670	20.680		62.46	0.000	0.000
					C	4.670	20.680		62.46	0.000	0.000
T33	50.00	0.811	6	127.917	A	4.670	21.892	15.833	59.61	15.520	47.230
60.00-40.00					B	4.670	21.892		59.61	0.000	0.000
					C	4.670	21.892		59.61	0.000	0.000
T34	30.00	0.701	5	127.917	A	4.670	21.892	15.833	59.61	15.520	47.230
40.00-20.00					B	4.670	21.892		59.61	0.000	0.000
					C	4.670	21.892		59.61	0.000	0.000
T35	15.00	0.7	5	63.958	A	2.335	11.539	7.917	57.06	7.760	23.615
20.00-10.00					B	2.335	11.539		57.06	0.000	0.000
					C	2.335	11.539		57.06	0.000	0.000
T36 10.00-0.00	5.00	0.7	5	35.220	A	5.145	10.583	10.583	67.29	7.760	23.615
					B	5.145	10.583		67.29	0.000	0.000
					C	5.145	10.583		67.29	0.000	0.000

Tower Forces - No Ice - Wind Normal To Face

Section Elevation ft	Add Weight lb	Self Weight lb	Face	e	C_F	q_z psf	D_F	D_R	A_E ft²	F lb	w plf	Ctrl. Face
T1	112.54	2993.39	A	0.194	2.617	187	1	1	12.712	7339.03	431.71	C
697.00-680.00			B	0.194	2.617		1	1	12.712			
			C	0.194	2.617		1	1	12.712			
T2	169.12	3185.40	A	0.18	2.666	185	1	1	13.349	8821.54	441.08	C
680.00-660.00			B	0.18	2.666		1	1	13.349			
			C	0.18	2.666		1	1	13.349			
T3	218.80	2904.57	A	0.17	2.7	184	1	1	12.575	9583.18	479.16	C
660.00-640.00			B	0.17	2.7		1	1	12.575			
			C	0.17	2.7		1	1	12.575			
T4	218.80	2787.56	A	0.165	2.718	182	1	1	12.190	9370.12	468.51	C
640.00-620.00			B	0.165	2.718		1	1	12.190			
			C	0.165	2.718		1	1	12.190			
T5	218.80	2904.57	A	0.17	2.7	180	1	1	12.575	9410.85	470.54	C
620.00-600.00			B	0.17	2.7		1	1	12.575			
			C	0.17	2.7		1	1	12.575			
T6	218.80	3037.19	A	0.175	2.683	179	1	1	12.961	9445.96	472.30	C
600.00-580.00			B	0.175	2.683		1	1	12.961			
			C	0.175	2.683		1	1	12.961			
T7	305.20	3185.40	A	0.18	2.666	177	1	1	13.349	11304.74	565.24	C

Section Elevation ft	Add Weight lb	Self Weight lb	Face	e	C_F	q_z psf	D_F	D_R	A_E ft²	F lb	w plf	Ctrl. Face
580.00-560.00			B	0.18	2.666		1	1	13.349			
			C	0.18	2.666		1	1	13.349			
T8	305.20	3497.45	A	0.186	2.642	175	1	1	13.990	11395.50	569.78	C
560.00-540.00			B	0.186	2.642		1	1	13.990			
			C	0.186	2.642		1	1	13.990			
T9	305.20	3639.86	A	0.19	2.629	173	1	1	14.116	11297.79	564.89	C
540.00-520.00			B	0.19	2.629		1	1	14.116			
			C	0.19	2.629		1	1	14.116			
T10	305.20	3327.83	A	0.18	2.663	171	1	1	13.336	10940.45	547.02	C
520.00-500.00			B	0.18	2.663		1	1	13.336			
			C	0.18	2.663		1	1	13.336			
T11	385.12	3078.20	A	0.171	2.697	170	1	1	12.561	12201.46	610.07	C
500.00-480.00			B	0.171	2.697		1	1	12.561			
			C	0.171	2.697		1	1	12.561			
T12	391.60	3195.21	A	0.176	2.68	168	1	1	12.948	12303.68	615.18	C
480.00-460.00			B	0.176	2.68		1	1	12.948			
			C	0.176	2.68		1	1	12.948			
T13	391.60	3476.04	A	0.185	2.646	165	1	1	13.725	12379.37	618.97	C
460.00-440.00			B	0.185	2.646		1	1	13.725			
			C	0.185	2.646		1	1	13.725			
T14	391.60	3950.54	A	0.196	2.61	163	1	1	14.500	12432.22	621.61	C
440.00-420.00			B	0.196	2.61		1	1	14.500			
			C	0.196	2.61		1	1	14.500			
T15	391.60	4098.77	A	0.198	2.604	161	1	1	14.752	12341.74	617.09	C
420.00-400.00			B	0.198	2.604		1	1	14.752			
			C	0.198	2.604		1	1	14.752			
T16	391.60	3638.51	A	0.186	2.643	159	1	1	13.716	11874.87	593.74	C
400.00-380.00			B	0.186	2.643		1	1	13.716			
			C	0.186	2.643		1	1	13.716			
T17	391.60	3505.90	A	0.181	2.66	156	1	1	13.326	11590.19	579.51	C
380.00-360.00			B	0.181	2.66		1	1	13.326			
			C	0.181	2.66		1	1	13.326			
T18	396.70	3388.88	A	0.176	2.677	154	1	1	12.938	11458.82	572.94	C
360.00-340.00			B	0.176	2.677		1	1	12.938			
			C	0.176	2.677		1	1	12.938			
T19	401.80	3505.90	A	0.181	2.66	151	1	1	13.326	11527.86	576.39	C
340.00-320.00			B	0.181	2.66		1	1	13.326			
			C	0.181	2.66		1	1	13.326			
T20	401.80	3638.51	A	0.186	2.643	149	1	1	13.716	11425.88	571.29	C
320.00-300.00			B	0.186	2.643		1	1	13.716			
			C	0.186	2.643		1	1	13.716			
T21	401.80	3950.54	A	0.196	2.61	146	1	1	14.500	11408.07	570.40	C
300.00-280.00			B	0.196	2.61		1	1	14.500			
			C	0.196	2.61		1	1	14.500			
T22	401.80	4098.77	A	0.198	2.604	143	1	1	14.752	11246.34	562.32	C
280.00-260.00			B	0.198	2.604		1	1	14.752			
			C	0.198	2.604		1	1	14.752			
T23	401.80	4839.04	A	0.208	2.571	140	1	1	15.287	11106.65	555.33	C
260.00-240.00			B	0.208	2.571		1	1	15.287			
			C	0.208	2.571		1	1	15.287			
T24	401.80	4690.83	A	0.203	2.586	137	1	1	14.890	10753.76	537.69	C
240.00-220.00			B	0.203	2.586		1	1	14.890			
			C	0.203	2.586		1	1	14.890			
T25	401.80	4441.20	A	0.193	2.618	133	1	1	14.101	10297.65	514.88	C
220.00-200.00			B	0.193	2.618		1	1	14.101			
			C	0.193	2.618		1	1	14.101			
T26	401.80	4441.20	A	0.193	2.618	129	1	1	14.101	10007.35	500.37	C
200.00-180.00			B	0.193	2.618		1	1	14.101			
			C	0.193	2.618		1	1	14.101			
T27	401.80	4558.21	A	0.198	2.602	125	1	1	14.494	9779.49	488.97	C

Section Elevation ft	Add Weight lb	Self Weight lb	Face	e	C_F	q_z psf	D_F	D_R	A_E ft²	F lb	w plf	Ctrl. Face
180.00-160.00			B	0.198	2.602		1	1	14.494			
			C	0.198	2.602		1	1	14.494			
T28	401.80	4839.04	A	0.208	2.571	121	1	1	15.287	9598.37	479.92	C
160.00-140.00			B	0.208	2.571		1	1	15.287			
			C	0.208	2.571		1	1	15.287			
T29	401.80	4987.27	A	0.209	2.565	116	1	1	15.539	9268.66	463.43	C
140.00-120.00			B	0.209	2.565		1	1	15.539			
			C	0.209	2.565		1	1	15.539			
T30	401.80	4558.21	A	0.198	2.602	111	1	1	14.494	8635.75	431.79	C
120.00-100.00			B	0.198	2.602		1	1	14.494			
			C	0.198	2.602		1	1	14.494			
T31	412.00	4441.20	A	0.193	2.618	104	1	1	14.101	8297.69	414.88	C
100.00-80.00			B	0.193	2.618		1	1	14.101			
			C	0.193	2.618		1	1	14.101			
T32	412.00	4558.21	A	0.198	2.602	97	1	1	14.494	7788.86	389.44	C
80.00-60.00			B	0.198	2.602		1	1	14.494			
			C	0.198	2.602		1	1	14.494			
T33	412.00	4839.04	A	0.208	2.571	88	1	1	15.287	7193.61	359.68	C
60.00-40.00			B	0.208	2.571		1	1	15.287			
			C	0.208	2.571		1	1	15.287			
T34	412.00	4839.04	A	0.208	2.571	76	1	1	15.484	6249.67	312.48	C
40.00-20.00			B	0.208	2.571		1	1	15.484			
			C	0.208	2.571		1	1	15.484			
T35	206.00	2589.23	A	0.217	2.54	76	1	1	8.131	3171.12	317.11	C
20.00-10.00			B	0.217	2.54		1	1	8.131			
			C	0.217	2.54		1	1	8.131			
T36	206.00	3809.26	A	0.447	1.979	76	1	1	11.637	3301.58	330.16	C
10.00-0.00			B	0.447	1.979		1	1	11.637			
			C	0.447	1.979		1	1	11.637			
Sum Weight:	12390.68	137419.97								356549.86		

Tower Forces - No Ice - Wind 60 To Face

Section Elevation ft	Add Weight lb	Self Weight lb	Face	e	C_F	q_z psf	D_F	D_R	A_E ft²	F lb	w plf	Ctrl. Face
T1	112.54	2993.39	A	0.194	2.617	187	0.8	1	11.713	6923.91	407.29	C
697.00-680.00			B	0.194	2.617		0.8	1	11.713			
			C	0.194	2.617		0.8	1	11.713			
T2	169.12	3185.40	A	0.18	2.666	185	0.8	1	12.397	8421.96	421.10	C
680.00-660.00			B	0.18	2.666		0.8	1	12.397			
			C	0.18	2.666		0.8	1	12.397			
T3	218.80	2904.57	A	0.17	2.7	184	0.8	1	11.624	9181.93	459.10	C
660.00-640.00			B	0.17	2.7		0.8	1	11.624			
			C	0.17	2.7		0.8	1	11.624			
T4	218.80	2787.56	A	0.165	2.718	182	0.8	1	11.239	8969.86	448.49	C
640.00-620.00			B	0.165	2.718		0.8	1	11.239			
			C	0.165	2.718		0.8	1	11.239			
T5	218.80	2904.57	A	0.17	2.7	180	0.8	1	11.624	9016.81	450.84	C
620.00-600.00			B	0.17	2.7		0.8	1	11.624			
			C	0.17	2.7		0.8	1	11.624			
T6	218.80	3037.19	A	0.175	2.683	179	0.8	1	12.010	9058.16	452.91	C
600.00-580.00			B	0.175	2.683		0.8	1	12.010			

Section Elevation ft	Add Weight lb	Self Weight lb	Face	e	C_F	q_z psf	D_F	D_R	A_E ft²	F lb	w plf	Ctrl. Face
			C	0.175	2.683		0.8	1	12.010			
T7	305.20	3185.40	A	0.18	2.666	177	0.8	1	12.397	10923.19	546.16	C
580.00-560.00			B	0.18	2.666		0.8	1	12.397			
			C	0.18	2.666		0.8	1	12.397			
T8	305.20	3497.45	A	0.186	2.642	175	0.8	1	12.991	11002.44	550.12	C
560.00-540.00			B	0.186	2.642		0.8	1	12.991			
			C	0.186	2.642		0.8	1	12.991			
T9	305.20	3639.86	A	0.19	2.629	173	0.8	1	13.168	10930.53	546.53	C
540.00-520.00			B	0.19	2.629		0.8	1	13.168			
			C	0.19	2.629		0.8	1	13.168			
T10	305.20	3327.83	A	0.18	2.663	171	0.8	1	12.388	10572.58	528.63	C
520.00-500.00			B	0.18	2.663		0.8	1	12.388			
			C	0.18	2.663		0.8	1	12.388			
T11	385.12	3078.20	A	0.171	2.697	170	0.8	1	11.613	11833.11	591.66	C
500.00-480.00			B	0.171	2.697		0.8	1	11.613			
			C	0.171	2.697		0.8	1	11.613			
T12	391.60	3195.21	A	0.176	2.68	168	0.8	1	12.000	11942.01	597.10	C
480.00-460.00			B	0.176	2.68		0.8	1	12.000			
			C	0.176	2.68		0.8	1	12.000			
T13	391.60	3476.04	A	0.185	2.646	165	0.8	1	12.777	12026.67	601.33	C
460.00-440.00			B	0.185	2.646		0.8	1	12.777			
			C	0.185	2.646		0.8	1	12.777			
T14	391.60	3950.54	A	0.196	2.61	163	0.8	1	13.555	12090.03	604.50	C
440.00-420.00			B	0.196	2.61		0.8	1	13.555			
			C	0.196	2.61		0.8	1	13.555			
T15	391.60	4098.77	A	0.198	2.604	161	0.8	1	13.760	11988.14	599.41	C
420.00-400.00			B	0.198	2.604		0.8	1	13.760			
			C	0.198	2.604		0.8	1	13.760			
T16	391.60	3638.51	A	0.186	2.643	159	0.8	1	12.771	11537.90	576.90	C
400.00-380.00			B	0.186	2.643		0.8	1	12.771			
			C	0.186	2.643		0.8	1	12.771			
T17	391.60	3505.90	A	0.181	2.66	156	0.8	1	12.381	11256.16	562.81	C
380.00-360.00			B	0.181	2.66		0.8	1	12.381			
			C	0.181	2.66		0.8	1	12.381			
T18	396.70	3388.88	A	0.176	2.677	154	0.8	1	11.993	11127.96	556.40	C
360.00-340.00			B	0.176	2.677		0.8	1	11.993			
			C	0.176	2.677		0.8	1	11.993			
T19	401.80	3505.90	A	0.181	2.66	151	0.8	1	12.381	11204.57	560.23	C
340.00-320.00			B	0.181	2.66		0.8	1	12.381			
			C	0.181	2.66		0.8	1	12.381			
T20	401.80	3638.51	A	0.186	2.643	149	0.8	1	12.771	11110.30	555.52	C
320.00-300.00			B	0.186	2.643		0.8	1	12.771			
			C	0.186	2.643		0.8	1	12.771			
T21	401.80	3950.54	A	0.196	2.61	146	0.8	1	13.555	11102.31	555.12	C
300.00-280.00			B	0.196	2.61		0.8	1	13.555			
			C	0.196	2.61		0.8	1	13.555			
T22	401.80	4098.77	A	0.198	2.604	143	0.8	1	13.760	10932.53	546.63	C
280.00-260.00			B	0.198	2.604		0.8	1	13.760			
			C	0.198	2.604		0.8	1	13.760			
T23	401.80	4839.04	A	0.208	2.571	140	0.8	1	14.353	10821.21	541.06	C
260.00-240.00			B	0.208	2.571		0.8	1	14.353			
			C	0.208	2.571		0.8	1	14.353			
T24	401.80	4690.83	A	0.203	2.586	137	0.8	1	13.956	10473.34	523.67	C
240.00-220.00			B	0.203	2.586		0.8	1	13.956			
			C	0.203	2.586		0.8	1	13.956			
T25	401.80	4441.20	A	0.193	2.618	133	0.8	1	13.167	10021.07	501.05	C
220.00-200.00			B	0.193	2.618		0.8	1	13.167			
			C	0.193	2.618		0.8	1	13.167			
T26	401.80	4441.20	A	0.193	2.618	129	0.8	1	13.167	9738.57	486.93	C
200.00-180.00			B	0.193	2.618		0.8	1	13.167			

Section Elevation ft	Add Weight lb	Self Weight lb	Face	e	C_F	q_z psf	D_F	D_R	A_E ft²	F lb	w plf	Ctrl. Face
			C	0.193	2.618		0.8	1	13.167			
T27	401.80	4558.21	A	0.198	2.602	125	0.8	1	13.560	9520.70	476.04	C
180.00-160.00			B	0.198	2.602		0.8	1	13.560			
			C	0.198	2.602		0.8	1	13.560			
T28	401.80	4839.04	A	0.208	2.571	121	0.8	1	14.353	9351.70	467.58	C
160.00-140.00			B	0.208	2.571		0.8	1	14.353			
			C	0.208	2.571		0.8	1	14.353			
T29	401.80	4987.27	A	0.209	2.565	116	0.8	1	14.558	9020.60	451.03	C
140.00-120.00			B	0.209	2.565		0.8	1	14.558			
			C	0.209	2.565		0.8	1	14.558			
T30	401.80	4558.21	A	0.198	2.602	111	0.8	1	13.560	8407.23	420.36	C
120.00-100.00			B	0.198	2.602		0.8	1	13.560			
			C	0.198	2.602		0.8	1	13.560			
T31	412.00	4441.20	A	0.193	2.618	104	0.8	1	13.167	8080.58	404.03	C
100.00-80.00			B	0.193	2.618		0.8	1	13.167			
			C	0.193	2.618		0.8	1	13.167			
T32	412.00	4558.21	A	0.198	2.602	97	0.8	1	13.560	7588.02	379.40	C
80.00-60.00			B	0.198	2.602		0.8	1	13.560			
			C	0.198	2.602		0.8	1	13.560			
T33	412.00	4839.04	A	0.208	2.571	88	0.8	1	14.353	7013.39	350.67	C
60.00-40.00			B	0.208	2.571		0.8	1	14.353			
			C	0.208	2.571		0.8	1	14.353			
T34	412.00	4839.04	A	0.208	2.571	76	0.8	1	14.550	6093.92	304.70	C
40.00-20.00			B	0.208	2.571		0.8	1	14.550			
			C	0.208	2.571		0.8	1	14.550			
T35	206.00	2589.23	A	0.217	2.54	76	0.8	1	7.664	3094.23	309.42	C
20.00-10.00			B	0.217	2.54		0.8	1	7.664			
			C	0.217	2.54		0.8	1	7.664			
T36	206.00	3809.26	A	0.447	1.979	76	0.8	1	10.608	3169.59	316.96	C
10.00-0.00			B	0.447	1.979		0.8	1	10.608			
			C	0.447	1.979		0.8	1	10.608			
Sum Weight:	12390.68	137419.97								345547.22		

Tower Forces - No Ice - Wind 90 To Face

Section Elevation ft	Add Weight lb	Self Weight lb	Face	e	C_F	q_z psf	D_F	D_R	A_E ft²	F lb	w plf	Ctrl. Face
T1	112.54	2993.39	A	0.194	2.617	187	0.85	1	11.962	7027.69	413.39	C
697.00-680.00			B	0.194	2.617		0.85	1	11.962			
			C	0.194	2.617		0.85	1	11.962			
T2	169.12	3185.40	A	0.18	2.666	185	0.85	1	12.635	8521.86	426.09	C
680.00-660.00			B	0.18	2.666		0.85	1	12.635			
			C	0.18	2.666		0.85	1	12.635			
T3	218.80	2904.57	A	0.17	2.7	184	0.85	1	11.862	9282.24	464.11	C
660.00-640.00			B	0.17	2.7		0.85	1	11.862			
			C	0.17	2.7		0.85	1	11.862			
T4	218.80	2787.56	A	0.165	2.718	182	0.85	1	11.477	9069.93	453.50	C
640.00-620.00			B	0.165	2.718		0.85	1	11.477			
			C	0.165	2.718		0.85	1	11.477			
T5	218.80	2904.57	A	0.17	2.7	180	0.85	1	11.862	9115.32	455.77	C
620.00-600.00			B	0.17	2.7		0.85	1	11.862			
			C	0.17	2.7		0.85	1	11.862			

Section Elevation ft	Add Weight lb	Self Weight lb	Face	e	C_F	q_z psf	D_F	D_R	A_E ft²	F lb	w plf	Ctrl. Face
T6	218.80	3037.19	A	0.175	2.683	179	0.85	1	12.248	9155.11	457.76	C
600.00-580.00			B	0.175	2.683		0.85	1	12.248			
			C	0.175	2.683		0.85	1	12.248			
T7	305.20	3185.40	A	0.18	2.666	177	0.85	1	12.635	11018.58	550.93	C
580.00-560.00			B	0.18	2.666		0.85	1	12.635			
			C	0.18	2.666		0.85	1	12.635			
T8	305.20	3497.45	A	0.186	2.642	175	0.85	1	13.241	11100.71	555.04	C
560.00-540.00			B	0.186	2.642		0.85	1	13.241			
			C	0.186	2.642		0.85	1	13.241			
T9	305.20	3639.86	A	0.19	2.629	173	0.85	1	13.405	11022.35	551.12	C
540.00-520.00			B	0.19	2.629		0.85	1	13.405			
			C	0.19	2.629		0.85	1	13.405			
T10	305.20	3327.83	A	0.18	2.663	171	0.85	1	12.625	10664.55	533.23	C
520.00-500.00			B	0.18	2.663		0.85	1	12.625			
			C	0.18	2.663		0.85	1	12.625			
T11	385.12	3078.20	A	0.171	2.697	170	0.85	1	11.850	11925.19	596.26	C
500.00-480.00			B	0.171	2.697		0.85	1	11.850			
			C	0.171	2.697		0.85	1	11.850			
T12	391.60	3195.21	A	0.176	2.68	168	0.85	1	12.237	12032.43	601.62	C
480.00-460.00			B	0.176	2.68		0.85	1	12.237			
			C	0.176	2.68		0.85	1	12.237			
T13	391.60	3476.04	A	0.185	2.646	165	0.85	1	13.014	12114.84	605.74	C
460.00-440.00			B	0.185	2.646		0.85	1	13.014			
			C	0.185	2.646		0.85	1	13.014			
T14	391.60	3950.54	A	0.196	2.61	163	0.85	1	13.791	12175.58	608.78	C
440.00-420.00			B	0.196	2.61		0.85	1	13.791			
			C	0.196	2.61		0.85	1	13.791			
T15	391.60	4098.77	A	0.198	2.604	161	0.85	1	14.008	12076.54	603.83	C
420.00-400.00			B	0.198	2.604		0.85	1	14.008			
			C	0.198	2.604		0.85	1	14.008			
T16	391.60	3638.51	A	0.186	2.643	159	0.85	1	13.007	11622.14	581.11	C
400.00-380.00			B	0.186	2.643		0.85	1	13.007			
			C	0.186	2.643		0.85	1	13.007			
T17	391.60	3505.90	A	0.181	2.66	156	0.85	1	12.618	11339.66	566.98	C
380.00-360.00			B	0.181	2.66		0.85	1	12.618			
			C	0.181	2.66		0.85	1	12.618			
T18	396.70	3388.88	A	0.176	2.677	154	0.85	1	12.229	11210.68	560.53	C
360.00-340.00			B	0.176	2.677		0.85	1	12.229			
			C	0.176	2.677		0.85	1	12.229			
T19	401.80	3505.90	A	0.181	2.66	151	0.85	1	12.618	11285.39	564.27	C
340.00-320.00			B	0.181	2.66		0.85	1	12.618			
			C	0.181	2.66		0.85	1	12.618			
T20	401.80	3638.51	A	0.186	2.643	149	0.85	1	13.007	11189.19	559.46	C
320.00-300.00			B	0.186	2.643		0.85	1	13.007			
			C	0.186	2.643		0.85	1	13.007			
T21	401.80	3950.54	A	0.196	2.61	146	0.85	1	13.791	11178.75	558.94	C
300.00-280.00			B	0.196	2.61		0.85	1	13.791			
			C	0.196	2.61		0.85	1	13.791			
T22	401.80	4098.77	A	0.198	2.604	143	0.85	1	14.008	11010.98	550.55	C
280.00-260.00			B	0.198	2.604		0.85	1	14.008			
			C	0.198	2.604		0.85	1	14.008			
T23	401.80	4839.04	A	0.208	2.571	140	0.85	1	14.586	10892.57	544.63	C
260.00-240.00			B	0.208	2.571		0.85	1	14.586			
			C	0.208	2.571		0.85	1	14.586			
T24	401.80	4690.83	A	0.203	2.586	137	0.85	1	14.189	10543.45	527.17	C
240.00-220.00			B	0.203	2.586		0.85	1	14.189			
			C	0.203	2.586		0.85	1	14.189			
T25	401.80	4441.20	A	0.193	2.618	133	0.85	1	13.400	10090.21	504.51	C
220.00-200.00			B	0.193	2.618		0.85	1	13.400			
			C	0.193	2.618		0.85	1	13.400			

Section Elevation ft	Add Weight lb	Self Weight lb	Face	e	C_F	q_z psf	D_F	D_R	A_E ft²	F lb	w plf	Ctrl. Face
T26	401.80	4441.20	A	0.193	2.618	129	0.85	1	13.400	9805.77	490.29	C
200.00-180.00			B	0.193	2.618		0.85	1	13.400			
			C	0.193	2.618		0.85	1	13.400			
T27	401.80	4558.21	A	0.198	2.602	125	0.85	1	13.794	9585.40	479.27	C
180.00-160.00			B	0.198	2.602		0.85	1	13.794			
			C	0.198	2.602		0.85	1	13.794			
T28	401.80	4839.04	A	0.208	2.571	121	0.85	1	14.586	9413.36	470.67	C
160.00-140.00			B	0.208	2.571		0.85	1	14.586			
			C	0.208	2.571		0.85	1	14.586			
T29	401.80	4987.27	A	0.209	2.565	116	0.85	1	14.804	9082.62	454.13	C
140.00-120.00			B	0.209	2.565		0.85	1	14.804			
			C	0.209	2.565		0.85	1	14.804			
T30	401.80	4558.21	A	0.198	2.602	111	0.85	1	13.794	8464.36	423.22	C
120.00-100.00			B	0.198	2.602		0.85	1	13.794			
			C	0.198	2.602		0.85	1	13.794			
T31	412.00	4441.20	A	0.193	2.618	104	0.85	1	13.400	8134.86	406.74	C
100.00-80.00			B	0.193	2.618		0.85	1	13.400			
			C	0.193	2.618		0.85	1	13.400			
T32	412.00	4558.21	A	0.198	2.602	97	0.85	1	13.794	7638.23	381.91	C
80.00-60.00			B	0.198	2.602		0.85	1	13.794			
			C	0.198	2.602		0.85	1	13.794			
T33	412.00	4839.04	A	0.208	2.571	88	0.85	1	14.586	7058.45	352.92	C
60.00-40.00			B	0.208	2.571		0.85	1	14.586			
			C	0.208	2.571		0.85	1	14.586			
T34	412.00	4839.04	A	0.208	2.571	76	0.85	1	14.784	6132.86	306.64	C
40.00-20.00			B	0.208	2.571		0.85	1	14.784			
			C	0.208	2.571		0.85	1	14.784			
T35	206.00	2589.23	A	0.217	2.54	76	0.85	1	7.781	3113.45	311.35	C
20.00-10.00			B	0.217	2.54		0.85	1	7.781			
			C	0.217	2.54		0.85	1	7.781			
T36	206.00	3809.26	A	0.447	1.979	76	0.85	1	10.865	3202.58	320.26	C
10.00-0.00			B	0.447	1.979		0.85	1	10.865			
			C	0.447	1.979		0.85	1	10.865			
Sum Weight:	12390.68	137419.97								348297.88		

Tower Forces - Service - Wind Normal To Face

Section Elevation ft	Add Weight lb	Self Weight lb	Face	e	C_F	q_z psf	D_F	D_R	A_E ft²	F lb	w plf	Ctrl. Face
T1	112.54	2993.39	A	0.194	2.617	12	1	1	14.013	509.32	29.96	C
697.00-680.00			B	0.194	2.617		1	1	14.013			
			C	0.194	2.617		1	1	14.013			
T2	169.12	3185.40	A	0.18	2.666	12	1	1	14.946	613.55	30.68	C
680.00-660.00			B	0.18	2.666		1	1	14.946			
			C	0.18	2.666		1	1	14.946			
T3	218.80	2904.57	A	0.17	2.7	12	1	1	14.218	664.22	33.21	C
660.00-640.00			B	0.17	2.7		1	1	14.218			
			C	0.17	2.7		1	1	14.218			
T4	218.80	2787.56	A	0.165	2.718	12	1	1	13.857	650.96	32.55	C
640.00-620.00			B	0.165	2.718		1	1	13.857			
			C	0.165	2.718		1	1	13.857			
T5	218.80	2904.57	A	0.17	2.7	12	1	1	14.218	652.27	32.61	C

Section Elevation ft	Add Weight lb	Self Weight lb	Face	e	C_F	q_z psf	D_F	D_R	A_E ft²	F lb	w plf	Ctrl. Face
620.00-600.00			B	0.17	2.7		1	1	14.218			
			C	0.17	2.7		1	1	14.218			
T6	218.80	3037.19	A	0.175	2.683	12	1	1	14.581	653.24	32.66	C
600.00-580.00			B	0.175	2.683		1	1	14.581			
			C	0.175	2.683		1	1	14.581			
T7	305.20	3185.40	A	0.18	2.666	11	1	1	14.946	772.10	38.60	C
580.00-560.00			B	0.18	2.666		1	1	14.946			
			C	0.18	2.666		1	1	14.946			
T8	305.20	3497.45	A	0.186	2.642	11	1	1	15.555	776.37	38.82	C
560.00-540.00			B	0.186	2.642		1	1	15.555			
			C	0.186	2.642		1	1	15.555			
T9	305.20	3639.86	A	0.19	2.629	11	1	1	15.774	771.78	38.59	C
540.00-520.00			B	0.19	2.629		1	1	15.774			
			C	0.19	2.629		1	1	15.774			
T10	305.20	3327.83	A	0.18	2.663	11	1	1	15.043	749.97	37.50	C
520.00-500.00			B	0.18	2.663		1	1	15.043			
			C	0.18	2.663		1	1	15.043			
T11	385.12	3078.20	A	0.171	2.697	11	1	1	14.317	832.77	41.64	C
500.00-480.00			B	0.171	2.697		1	1	14.317			
			C	0.171	2.697		1	1	14.317			
T12	391.60	3195.21	A	0.176	2.68	11	1	1	14.679	837.97	41.90	C
480.00-460.00			B	0.176	2.68		1	1	14.679			
			C	0.176	2.68		1	1	14.679			
T13	391.60	3476.04	A	0.185	2.646	11	1	1	15.408	840.63	42.03	C
460.00-440.00			B	0.185	2.646		1	1	15.408			
			C	0.185	2.646		1	1	15.408			
T14	391.60	3950.54	A	0.196	2.61	11	1	1	16.238	844.30	42.21	C
440.00-420.00			B	0.196	2.61		1	1	16.238			
			C	0.196	2.61		1	1	16.238			
T15	391.60	4098.77	A	0.198	2.604	10	1	1	16.481	837.58	41.88	C
420.00-400.00			B	0.198	2.604		1	1	16.481			
			C	0.198	2.604		1	1	16.481			
T16	391.60	3638.51	A	0.186	2.643	10	1	1	15.506	808.84	40.44	C
400.00-380.00			B	0.186	2.643		1	1	15.506			
			C	0.186	2.643		1	1	15.506			
T17	391.60	3505.90	A	0.181	2.66	10	1	1	15.142	790.67	39.53	C
380.00-360.00			B	0.181	2.66		1	1	15.142			
			C	0.181	2.66		1	1	15.142			
T18	396.70	3388.88	A	0.176	2.677	10	1	1	14.780	782.37	39.12	C
360.00-340.00			B	0.176	2.677		1	1	14.780			
			C	0.176	2.677		1	1	14.780			
T19	401.80	3505.90	A	0.181	2.66	10	1	1	15.142	785.31	39.27	C
340.00-320.00			B	0.181	2.66		1	1	15.142			
			C	0.181	2.66		1	1	15.142			
T20	401.80	3638.51	A	0.186	2.643	10	1	1	15.506	777.20	38.86	C
320.00-300.00			B	0.186	2.643		1	1	15.506			
			C	0.186	2.643		1	1	15.506			
T21	401.80	3950.54	A	0.196	2.61	9	1	1	16.238	773.77	38.69	C
300.00-280.00			B	0.196	2.61		1	1	16.238			
			C	0.196	2.61		1	1	16.238			
T22	401.80	4098.77	A	0.198	2.604	9	1	1	16.481	762.29	38.11	C
280.00-260.00			B	0.198	2.604		1	1	16.481			
			C	0.198	2.604		1	1	16.481			
T23	401.80	4839.04	A	0.208	2.571	9	1	1	17.277	757.21	37.86	C
260.00-240.00			B	0.208	2.571		1	1	17.277			
			C	0.208	2.571		1	1	17.277			
T24	401.80	4690.83	A	0.203	2.586	9	1	1	16.909	734.28	36.71	C
240.00-220.00			B	0.203	2.586		1	1	16.909			
			C	0.203	2.586		1	1	16.909			
T25	401.80	4441.20	A	0.193	2.618	9	1	1	16.180	705.40	35.27	C

Section Elevation ft	Add Weight lb	Self Weight lb	Face	e	C_F	q_z psf	D_F	D_R	A_E ft²	F lb	w plf	Ctrl. Face
220.00-200.00			B	0.193	2.618		1	1	16.180			
			C	0.193	2.618		1	1	16.180			
T26	401.80	4441.20	A	0.193	2.618	8	1	1	16.180	685.52	34.28	C
200.00-180.00			B	0.193	2.618		1	1	16.180			
			C	0.193	2.618		1	1	16.180			
T27	401.80	4558.21	A	0.198	2.602	8	1	1	16.544	668.82	33.44	C
180.00-160.00			B	0.198	2.602		1	1	16.544			
			C	0.198	2.602		1	1	16.544			
T28	401.80	4839.04	A	0.208	2.571	8	1	1	17.277	654.38	32.72	C
160.00-140.00			B	0.208	2.571		1	1	17.277			
			C	0.208	2.571		1	1	17.277			
T29	401.80	4987.27	A	0.209	2.565	7	1	1	17.518	631.44	31.57	C
140.00-120.00			B	0.209	2.565		1	1	17.518			
			C	0.209	2.565		1	1	17.518			
T30	401.80	4558.21	A	0.198	2.602	7	1	1	16.544	590.60	29.53	C
120.00-100.00			B	0.198	2.602		1	1	16.544			
			C	0.198	2.602		1	1	16.544			
T31	412.00	4441.20	A	0.193	2.618	7	1	1	16.180	567.58	28.38	C
100.00-80.00			B	0.193	2.618		1	1	16.180			
			C	0.193	2.618		1	1	16.180			
T32	412.00	4558.21	A	0.198	2.602	6	1	1	16.544	531.93	26.60	C
80.00-60.00			B	0.198	2.602		1	1	16.544			
			C	0.198	2.602		1	1	16.544			
T33	412.00	4839.04	A	0.208	2.571	6	1	1	17.277	489.79	24.49	C
60.00-40.00			B	0.208	2.571		1	1	17.277			
			C	0.208	2.571		1	1	17.277			
T34	412.00	4839.04	A	0.208	2.571	5	1	1	17.277	423.28	21.16	C
40.00-20.00			B	0.208	2.571		1	1	17.277			
			C	0.208	2.571		1	1	17.277			
T35	206.00	2589.23	A	0.217	2.54	5	1	1	9.001	214.22	21.42	C
20.00-10.00			B	0.217	2.54		1	1	9.001			
			C	0.217	2.54		1	1	9.001			
T36	206.00	3809.26	A	0.447	1.979	5	1	1	12.104	217.28	21.73	C
10.00-0.00			B	0.447	1.979		1	1	12.104			
			C	0.447	1.979		1	1	12.104			
Sum Weight:	12390.68	137419.97								24359.17		

Tower Forces - Service - Wind 60 To Face

Section Elevation ft	Add Weight lb	Self Weight lb	Face	e	C_F	q_z psf	D_F	D_R	A_E ft²	F lb	w plf	Ctrl. Face
T1	112.54	2993.39	A	0.194	2.617	12	0.8	1	13.014	482.49	28.38	C
697.00-680.00			B	0.194	2.617		0.8	1	13.014			
			C	0.194	2.617		0.8	1	13.014			
T2	169.12	3185.40	A	0.18	2.666	12	0.8	1	13.994	587.72	29.39	C
680.00-660.00			B	0.18	2.666		0.8	1	13.994			
			C	0.18	2.666		0.8	1	13.994			
T3	218.80	2904.57	A	0.17	2.7	12	0.8	1	13.267	638.28	31.91	C
660.00-640.00			B	0.17	2.7		0.8	1	13.267			
			C	0.17	2.7		0.8	1	13.267			
T4	218.80	2787.56	A	0.165	2.718	12	0.8	1	12.905	625.09	31.25	C
640.00-620.00			B	0.165	2.718		0.8	1	12.905			

Section Elevation ft	Add Weight lb	Self Weight lb	Face	e	C_F	q_z psf	D_F	D_R	A_E ft²	F lb	w plf	Ctrl. Face
			C	0.165	2.718		0.8	1	12.905			
T5	218.80	2904.57	A	0.17	2.7	12	0.8	1	13.267	626.80	31.34	C
620.00-600.00			B	0.17	2.7		0.8	1	13.267			
			C	0.17	2.7		0.8	1	13.267			
T6	218.80	3037.19	A	0.175	2.683	12	0.8	1	13.630	628.17	31.41	C
600.00-580.00			B	0.175	2.683		0.8	1	13.630			
			C	0.175	2.683		0.8	1	13.630			
T7	305.20	3185.40	A	0.18	2.666	11	0.8	1	13.994	747.44	37.37	C
580.00-560.00			B	0.18	2.666		0.8	1	13.994			
			C	0.18	2.666		0.8	1	13.994			
T8	305.20	3497.45	A	0.186	2.642	11	0.8	1	14.556	750.97	37.55	C
560.00-540.00			B	0.186	2.642		0.8	1	14.556			
			C	0.186	2.642		0.8	1	14.556			
T9	305.20	3639.86	A	0.19	2.629	11	0.8	1	14.826	748.04	37.40	C
540.00-520.00			B	0.19	2.629		0.8	1	14.826			
			C	0.19	2.629		0.8	1	14.826			
T10	305.20	3327.83	A	0.18	2.663	11	0.8	1	14.095	726.19	36.31	C
520.00-500.00			B	0.18	2.663		0.8	1	14.095			
			C	0.18	2.663		0.8	1	14.095			
T11	385.12	3078.20	A	0.171	2.697	11	0.8	1	13.369	808.96	40.45	C
500.00-480.00			B	0.171	2.697		0.8	1	13.369			
			C	0.171	2.697		0.8	1	13.369			
T12	391.60	3195.21	A	0.176	2.68	11	0.8	1	13.731	814.59	40.73	C
480.00-460.00			B	0.176	2.68		0.8	1	13.731			
			C	0.176	2.68		0.8	1	13.731			
T13	391.60	3476.04	A	0.185	2.646	11	0.8	1	14.460	817.83	40.89	C
460.00-440.00			B	0.185	2.646		0.8	1	14.460			
			C	0.185	2.646		0.8	1	14.460			
T14	391.60	3950.54	A	0.196	2.61	11	0.8	1	15.294	822.18	41.11	C
440.00-420.00			B	0.196	2.61		0.8	1	15.294			
			C	0.196	2.61		0.8	1	15.294			
T15	391.60	4098.77	A	0.198	2.604	10	0.8	1	15.489	814.72	40.74	C
420.00-400.00			B	0.198	2.604		0.8	1	15.489			
			C	0.198	2.604		0.8	1	15.489			
T16	391.60	3638.51	A	0.186	2.643	10	0.8	1	14.561	787.06	39.35	C
400.00-380.00			B	0.186	2.643		0.8	1	14.561			
			C	0.186	2.643		0.8	1	14.561			
T17	391.60	3505.90	A	0.181	2.66	10	0.8	1	14.198	769.08	38.45	C
380.00-360.00			B	0.181	2.66		0.8	1	14.198			
			C	0.181	2.66		0.8	1	14.198			
T18	396.70	3388.88	A	0.176	2.677	10	0.8	1	13.835	760.99	38.05	C
360.00-340.00			B	0.176	2.677		0.8	1	13.835			
			C	0.176	2.677		0.8	1	13.835			
T19	401.80	3505.90	A	0.181	2.66	10	0.8	1	14.198	764.41	38.22	C
340.00-320.00			B	0.181	2.66		0.8	1	14.198			
			C	0.181	2.66		0.8	1	14.198			
T20	401.80	3638.51	A	0.186	2.643	10	0.8	1	14.561	756.80	37.84	C
320.00-300.00			B	0.186	2.643		0.8	1	14.561			
			C	0.186	2.643		0.8	1	14.561			
T21	401.80	3950.54	A	0.196	2.61	9	0.8	1	15.294	754.00	37.70	C
300.00-280.00			B	0.196	2.61		0.8	1	15.294			
			C	0.196	2.61		0.8	1	15.294			
T22	401.80	4098.77	A	0.198	2.604	9	0.8	1	15.489	742.01	37.10	C
280.00-260.00			B	0.198	2.604		0.8	1	15.489			
			C	0.198	2.604		0.8	1	15.489			
T23	401.80	4839.04	A	0.208	2.571	9	0.8	1	16.343	738.76	36.94	C
260.00-240.00			B	0.208	2.571		0.8	1	16.343			
			C	0.208	2.571		0.8	1	16.343			
T24	401.80	4690.83	A	0.203	2.586	9	0.8	1	15.975	716.16	35.81	C
240.00-220.00			B	0.203	2.586		0.8	1	15.975			

Section Elevation ft	Add Weight lb	Self Weight lb	Face	e	C_F	q_z psf	D_F	D_R	A_E ft²	F lb	w plf	Ctrl. Face
			C	0.203	2.586		0.8	1	15.975			
T25	401.80	4441.20	A	0.193	2.618	9	0.8	1	15.246	687.53	34.38	C
220.00-200.00			B	0.193	2.618		0.8	1	15.246			
			C	0.193	2.618		0.8	1	15.246			
T26	401.80	4441.20	A	0.193	2.618	8	0.8	1	15.246	668.15	33.41	C
200.00-180.00			B	0.193	2.618		0.8	1	15.246			
			C	0.193	2.618		0.8	1	15.246			
T27	401.80	4558.21	A	0.198	2.602	8	0.8	1	15.610	652.09	32.60	C
180.00-160.00			B	0.198	2.602		0.8	1	15.610			
			C	0.198	2.602		0.8	1	15.610			
T28	401.80	4839.04	A	0.208	2.571	8	0.8	1	16.343	638.43	31.92	C
160.00-140.00			B	0.208	2.571		0.8	1	16.343			
			C	0.208	2.571		0.8	1	16.343			
T29	401.80	4987.27	A	0.209	2.565	7	0.8	1	16.537	615.41	30.77	C
140.00-120.00			B	0.209	2.565		0.8	1	16.537			
			C	0.209	2.565		0.8	1	16.537			
T30	401.80	4558.21	A	0.198	2.602	7	0.8	1	15.610	575.83	28.79	C
120.00-100.00			B	0.198	2.602		0.8	1	15.610			
			C	0.198	2.602		0.8	1	15.610			
T31	412.00	4441.20	A	0.193	2.618	7	0.8	1	15.246	553.54	27.68	C
100.00-80.00			B	0.193	2.618		0.8	1	15.246			
			C	0.193	2.618		0.8	1	15.246			
T32	412.00	4558.21	A	0.198	2.602	6	0.8	1	15.610	518.95	25.95	C
80.00-60.00			B	0.198	2.602		0.8	1	15.610			
			C	0.198	2.602		0.8	1	15.610			
T33	412.00	4839.04	A	0.208	2.571	6	0.8	1	16.343	478.14	23.91	C
60.00-40.00			B	0.208	2.571		0.8	1	16.343			
			C	0.208	2.571		0.8	1	16.343			
T34	412.00	4839.04	A	0.208	2.571	5	0.8	1	16.343	413.21	20.66	C
40.00-20.00			B	0.208	2.571		0.8	1	16.343			
			C	0.208	2.571		0.8	1	16.343			
T35	206.00	2589.23	A	0.217	2.54	5	0.8	1	8.534	209.25	20.93	C
20.00-10.00			B	0.217	2.54		0.8	1	8.534			
			C	0.217	2.54		0.8	1	8.534			
T36	206.00	3809.26	A	0.447	1.979	5	0.8	1	11.075	208.75	20.87	C
10.00-0.00			B	0.447	1.979		0.8	1	11.075			
			C	0.447	1.979		0.8	1	11.075			
Sum Weight:	12390.68	137419.97								23647.99		

Tower Forces - Service - Wind 90 To Face

Section Elevation ft	Add Weight lb	Self Weight lb	Face	e	C_F	q_z psf	D_F	D_R	A_E ft²	F lb	w plf	Ctrl. Face
T1	112.54	2993.39	A	0.194	2.617	12	0.85	1	13.264	489.20	28.78	C
697.00-680.00			B	0.194	2.617		0.85	1	13.264			
			C	0.194	2.617		0.85	1	13.264			
T2	169.12	3185.40	A	0.18	2.666	12	0.85	1	14.232	594.18	29.71	C
680.00-660.00			B	0.18	2.666		0.85	1	14.232			
			C	0.18	2.666		0.85	1	14.232			
T3	218.80	2904.57	A	0.17	2.7	12	0.85	1	13.505	644.76	32.24	C
660.00-640.00			B	0.17	2.7		0.85	1	13.505			
			C	0.17	2.7		0.85	1	13.505			

Section Elevation ft	Add Weight lb	Self Weight lb	Face	e	C_F	q_z psf	D_F	D_R	A_E ft²	F lb	w plf	Ctrl. Face
T4	218.80	2787.56	A	0.165	2.718	12	0.85	1	13.143	631.56	31.58	C
640.00-620.00			B	0.165	2.718		0.85	1	13.143			
			C	0.165	2.718		0.85	1	13.143			
T5	218.80	2904.57	A	0.17	2.7	12	0.85	1	13.505	633.17	31.66	C
620.00-600.00			B	0.17	2.7		0.85	1	13.505			
			C	0.17	2.7		0.85	1	13.505			
T6	218.80	3037.19	A	0.175	2.683	12	0.85	1	13.868	634.44	31.72	C
600.00-580.00			B	0.175	2.683		0.85	1	13.868			
			C	0.175	2.683		0.85	1	13.868			
T7	305.20	3185.40	A	0.18	2.666	11	0.85	1	14.232	753.60	37.68	C
580.00-560.00			B	0.18	2.666		0.85	1	14.232			
			C	0.18	2.666		0.85	1	14.232			
T8	305.20	3497.45	A	0.186	2.642	11	0.85	1	14.806	757.32	37.87	C
560.00-540.00			B	0.186	2.642		0.85	1	14.806			
			C	0.186	2.642		0.85	1	14.806			
T9	305.20	3639.86	A	0.19	2.629	11	0.85	1	15.063	753.97	37.70	C
540.00-520.00			B	0.19	2.629		0.85	1	15.063			
			C	0.19	2.629		0.85	1	15.063			
T10	305.20	3327.83	A	0.18	2.663	11	0.85	1	14.332	732.14	36.61	C
520.00-500.00			B	0.18	2.663		0.85	1	14.332			
			C	0.18	2.663		0.85	1	14.332			
T11	385.12	3078.20	A	0.171	2.697	11	0.85	1	13.606	814.91	40.75	C
500.00-480.00			B	0.171	2.697		0.85	1	13.606			
			C	0.171	2.697		0.85	1	13.606			
T12	391.60	3195.21	A	0.176	2.68	11	0.85	1	13.968	820.44	41.02	C
480.00-460.00			B	0.176	2.68		0.85	1	13.968			
			C	0.176	2.68		0.85	1	13.968			
T13	391.60	3476.04	A	0.185	2.646	11	0.85	1	14.697	823.53	41.18	C
460.00-440.00			B	0.185	2.646		0.85	1	14.697			
			C	0.185	2.646		0.85	1	14.697			
T14	391.60	3950.54	A	0.196	2.61	11	0.85	1	15.530	827.71	41.39	C
440.00-420.00			B	0.196	2.61		0.85	1	15.530			
			C	0.196	2.61		0.85	1	15.530			
T15	391.60	4098.77	A	0.198	2.604	10	0.85	1	15.737	820.43	41.02	C
420.00-400.00			B	0.198	2.604		0.85	1	15.737			
			C	0.198	2.604		0.85	1	15.737			
T16	391.60	3638.51	A	0.186	2.643	10	0.85	1	14.798	792.50	39.63	C
400.00-380.00			B	0.186	2.643		0.85	1	14.798			
			C	0.186	2.643		0.85	1	14.798			
T17	391.60	3505.90	A	0.181	2.66	10	0.85	1	14.434	774.48	38.72	C
380.00-360.00			B	0.181	2.66		0.85	1	14.434			
			C	0.181	2.66		0.85	1	14.434			
T18	396.70	3388.88	A	0.176	2.677	10	0.85	1	14.071	766.33	38.32	C
360.00-340.00			B	0.176	2.677		0.85	1	14.071			
			C	0.176	2.677		0.85	1	14.071			
T19	401.80	3505.90	A	0.181	2.66	10	0.85	1	14.434	769.63	38.48	C
340.00-320.00			B	0.181	2.66		0.85	1	14.434			
			C	0.181	2.66		0.85	1	14.434			
T20	401.80	3638.51	A	0.186	2.643	10	0.85	1	14.798	761.90	38.09	C
320.00-300.00			B	0.186	2.643		0.85	1	14.798			
			C	0.186	2.643		0.85	1	14.798			
T21	401.80	3950.54	A	0.196	2.61	9	0.85	1	15.530	758.94	37.95	C
300.00-280.00			B	0.196	2.61		0.85	1	15.530			
			C	0.196	2.61		0.85	1	15.530			
T22	401.80	4098.77	A	0.198	2.604	9	0.85	1	15.737	747.08	37.35	C
280.00-260.00			B	0.198	2.604		0.85	1	15.737			
			C	0.198	2.604		0.85	1	15.737			
T23	401.80	4839.04	A	0.208	2.571	9	0.85	1	16.576	743.37	37.17	C
260.00-240.00			B	0.208	2.571		0.85	1	16.576			
			C	0.208	2.571		0.85	1	16.576			

Section Elevation ft	Add Weight lb	Self Weight lb	Face	e	C_F	q_z psf	D_F	D_R	A_E ft²	F lb	w plf	Ctrl. Face
T24	401.80	4690.83	A	0.203	2.586	9	0.85	1	16.209	720.69	36.03	C
240.00-220.00			B	0.203	2.586		0.85	1	16.209			
			C	0.203	2.586		0.85	1	16.209			
T25	401.80	4441.20	A	0.193	2.618	9	0.85	1	15.479	692.00	34.60	C
220.00-200.00			B	0.193	2.618		0.85	1	15.479			
			C	0.193	2.618		0.85	1	15.479			
T26	401.80	4441.20	A	0.193	2.618	8	0.85	1	15.479	672.49	33.62	C
200.00-180.00			B	0.193	2.618		0.85	1	15.479			
			C	0.193	2.618		0.85	1	15.479			
T27	401.80	4558.21	A	0.198	2.602	8	0.85	1	15.843	656.27	32.81	C
180.00-160.00			B	0.198	2.602		0.85	1	15.843			
			C	0.198	2.602		0.85	1	15.843			
T28	401.80	4839.04	A	0.208	2.571	8	0.85	1	16.576	642.42	32.12	C
160.00-140.00			B	0.208	2.571		0.85	1	16.576			
			C	0.208	2.571		0.85	1	16.576			
T29	401.80	4987.27	A	0.209	2.565	7	0.85	1	16.782	619.42	30.97	C
140.00-120.00			B	0.209	2.565		0.85	1	16.782			
			C	0.209	2.565		0.85	1	16.782			
T30	401.80	4558.21	A	0.198	2.602	7	0.85	1	15.843	579.52	28.98	C
120.00-100.00			B	0.198	2.602		0.85	1	15.843			
			C	0.198	2.602		0.85	1	15.843			
T31	412.00	4441.20	A	0.193	2.618	7	0.85	1	15.479	557.05	27.85	C
100.00-80.00			B	0.193	2.618		0.85	1	15.479			
			C	0.193	2.618		0.85	1	15.479			
T32	412.00	4558.21	A	0.198	2.602	6	0.85	1	15.843	522.19	26.11	C
80.00-60.00			B	0.198	2.602		0.85	1	15.843			
			C	0.198	2.602		0.85	1	15.843			
T33	412.00	4839.04	A	0.208	2.571	6	0.85	1	16.576	481.05	24.05	C
60.00-40.00			B	0.208	2.571		0.85	1	16.576			
			C	0.208	2.571		0.85	1	16.576			
T34	412.00	4839.04	A	0.208	2.571	5	0.85	1	16.576	415.73	20.79	C
40.00-20.00			B	0.208	2.571		0.85	1	16.576			
			C	0.208	2.571		0.85	1	16.576			
T35	206.00	2589.23	A	0.217	2.54	5	0.85	1	8.651	210.50	21.05	C
20.00-10.00			B	0.217	2.54		0.85	1	8.651			
			C	0.217	2.54		0.85	1	8.651			
T36	206.00	3809.26	A	0.447	1.979	5	0.85	1	11.332	210.88	21.09	C
10.00-0.00			B	0.447	1.979		0.85	1	11.332			
			C	0.447	1.979		0.85	1	11.332			
Sum Weight:	12390.68	137419.97								23825.79		

Force Totals (Does not include forces on guys)

Load Case	Vertical Forces lb	Sum of Forces X lb	Sum of Forces Z lb	Sum of Torques lb-ft
Leg Weight	98064.63			
Bracing Weight	39355.35			
Total Member Self-Weight	137419.97			
Guy Weight	59673.62			
Total Weight	214845.28			
Wind 0 deg - No Ice		-1471.22	-399869.67	-36346.83
Wind 30 deg - No Ice		192839.58	-339541.72	-447056.80

Load Case	Vertical Forces lb	Sum of Forces X lb	Sum of Forces Z lb	Sum of Torques lb-ft
Wind 60 deg - No Ice		334434.68	-194517.66	-744281.53
Wind 90 deg - No Ice		390051.24	3272.69	-836683.82
Wind 120 deg - No Ice		345539.70	203071.34	-704353.69
Wind 150 deg - No Ice		196310.55	341100.06	-387530.46
Wind 180 deg - No Ice		1922.72	390521.46	30467.71
Wind 210 deg - No Ice		-192123.60	340801.11	438929.12
Wind 240 deg - No Ice		-344166.22	199320.82	744154.62
Wind 270 deg - No Ice		-389993.75	-2181.97	840084.93
Wind 300 deg - No Ice		-335133.76	-196357.80	704626.29
Wind 330 deg - No Ice		-195672.47	-339596.85	385714.11
Total Weight	214845.28			
Wind 0 deg - Service		-95.09	-27159.21	-2349.34
Wind 30 deg - Service		13120.99	-23083.91	-28896.23
Wind 60 deg - Service		22753.81	-13229.46	-48107.83
Wind 90 deg - Service		26524.58	211.54	-54080.40
Wind 120 deg - Service		23471.60	13782.34	-45527.03
Wind 150 deg - Service		13345.34	23184.64	-25048.65
Wind 180 deg - Service		124.28	26554.98	1969.33
Wind 210 deg - Service		-13074.71	23165.31	28370.89
Wind 240 deg - Service		-23382.82	13539.92	48099.62
Wind 270 deg - Service		-26520.87	-141.04	54300.23
Wind 300 deg - Service		-22799.00	-13348.40	45544.65
Wind 330 deg - Service		-13304.10	-23087.47	24931.25

Load Combinations

Comb. No.	Description
1	Dead Only
2	1.2D+1.0W (pattern 1) 0 deg - No Ice+1.0 Guy
3	1.2D+1.0W (pattern 2) 0 deg - No Ice+1.0 Guy
4	1.2D+1.0W (pattern 3) 0 deg - No Ice+1.0 Guy
5	1.2D+1.0W (pattern 1) 30 deg - No Ice+1.0 Guy
6	1.2D+1.0W (pattern 2) 30 deg - No Ice+1.0 Guy
7	1.2D+1.0W (pattern 3) 30 deg - No Ice+1.0 Guy
8	1.2D+1.0W (pattern 1) 60 deg - No Ice+1.0 Guy
9	1.2D+1.0W (pattern 2) 60 deg - No Ice+1.0 Guy
10	1.2D+1.0W (pattern 3) 60 deg - No Ice+1.0 Guy
11	1.2D+1.0W (pattern 1) 90 deg - No Ice+1.0 Guy
12	1.2D+1.0W (pattern 2) 90 deg - No Ice+1.0 Guy
13	1.2D+1.0W (pattern 3) 90 deg - No Ice+1.0 Guy
14	1.2D+1.0W (pattern 1) 120 deg - No Ice+1.0 Guy
15	1.2D+1.0W (pattern 2) 120 deg - No Ice+1.0 Guy
16	1.2D+1.0W (pattern 3) 120 deg - No Ice+1.0 Guy
17	1.2D+1.0W (pattern 1) 150 deg - No Ice+1.0 Guy
18	1.2D+1.0W (pattern 2) 150 deg - No Ice+1.0 Guy
19	1.2D+1.0W (pattern 3) 150 deg - No Ice+1.0 Guy
20	1.2D+1.0W (pattern 1) 180 deg - No Ice+1.0 Guy
21	1.2D+1.0W (pattern 2) 180 deg - No Ice+1.0 Guy
22	1.2D+1.0W (pattern 3) 180 deg - No Ice+1.0 Guy
23	1.2D+1.0W (pattern 1) 210 deg - No Ice+1.0 Guy
24	1.2D+1.0W (pattern 2) 210 deg - No Ice+1.0 Guy
25	1.2D+1.0W (pattern 3) 210 deg - No Ice+1.0 Guy
26	1.2D+1.0W (pattern 1) 240 deg - No Ice+1.0 Guy

Comb. No.	Description
27	1.2D+1.0W (pattern 2) 240 deg - No Ice+1.0 Guy
28	1.2D+1.0W (pattern 3) 240 deg - No Ice+1.0 Guy
29	1.2D+1.0W (pattern 1) 270 deg - No Ice+1.0 Guy
30	1.2D+1.0W (pattern 2) 270 deg - No Ice+1.0 Guy
31	1.2D+1.0W (pattern 3) 270 deg - No Ice+1.0 Guy
32	1.2D+1.0W (pattern 1) 300 deg - No Ice+1.0 Guy
33	1.2D+1.0W (pattern 2) 300 deg - No Ice+1.0 Guy
34	1.2D+1.0W (pattern 3) 300 deg - No Ice+1.0 Guy
35	1.2D+1.0W (pattern 1) 330 deg - No Ice+1.0 Guy
36	1.2D+1.0W (pattern 2) 330 deg - No Ice+1.0 Guy
37	1.2D+1.0W (pattern 3) 330 deg - No Ice+1.0 Guy
38	Dead+Wind 0 deg - Service+Guy
39	Dead+Wind 30 deg - Service+Guy
40	Dead+Wind 60 deg - Service+Guy
41	Dead+Wind 90 deg - Service+Guy
42	Dead+Wind 120 deg - Service+Guy
43	Dead+Wind 150 deg - Service+Guy
44	Dead+Wind 180 deg - Service+Guy
45	Dead+Wind 210 deg - Service+Guy
46	Dead+Wind 240 deg - Service+Guy
47	Dead+Wind 270 deg - Service+Guy
48	Dead+Wind 300 deg - Service+Guy
49	Dead+Wind 330 deg - Service+Guy

Maximum Member Forces

Section No.	Elevation ft	Component Type	Condition	Gov. Load Comb.	Axial lb	Major Axis Moment lb-ft	Minor Axis Moment lb-ft
T1	697 - 680	Leg	Max Tension	16	2393.51	-1963.31	-3370.55
			Max. Compression	32	-125804.45	-1288.77	-43.17
			Max. Mx	10	-29074.64	-2745.38	2884.18
			Max. My	4	727.12	-66.97	3424.06
			Max. Vy	10	-24881.83	-2745.38	2884.18
			Max. Vx	4	34194.54	-66.97	3424.06
		Diagonal	Max Tension	10	46952.64	0.00	0.00
		Horizontal	Max Tension	1	0.00	0.00	0.00
			Max. Compression	2	-16832.35	0.00	0.00
			Max. Mx	2	-15572.15	33.08	0.00
			Max. My	13	-15692.88	0.00	0.10
			Max. Vy	2	-22.05	0.00	0.00
			Max. Vx	13	-0.07	0.00	0.00
		Top Girt	Max Tension	1	0.00	0.00	0.00
			Max. Compression	21	-8350.72	0.00	0.00
			Max. Mx	20	-7613.69	33.08	0.00
			Max. My	13	-7729.12	0.00	0.10
			Max. Vy	20	-22.05	0.00	0.00
			Max. Vx	13	-0.07	0.00	0.00
		Guy A	Bottom Tension	20	134891.40		
			Top Tension	20	138023.56		
			Top Cable Vert	20	102393.69		
			Top Cable Norm	20	92552.75		
			Top Cable Tan	20	160.10		
			Bot Cable Vert	20	-91115.91		
			Bot Cable Norm	20	99466.36		
			Bot Cable Tan	20	160.10		
		Guy B	Bottom Tension	32	142088.19		
			Top Tension	32	144855.47		
			Top Cable Vert	32	108512.44		

Section No.	Elevation ft	Component Type	Condition	Gov. Load Comb.	Axial lb	Major Axis Moment lb-ft	Minor Axis Moment lb-ft
			Top Cable Norm	32	95959.14		
			Top Cable Tan	32	41.06		
			Bot Cable Vert	32	-98331.31		
			Bot Cable Norm	32	102567.08		
			Bot Cable Tan	32	41.06		
		Guy C	Bottom Tension	8	130685.75		
			Top Tension	8	134046.62		
			Top Cable Vert	8	98335.06		
			Top Cable Norm	8	91097.09		
			Top Cable Tan	8	177.17		
			Bot Cable Vert	8	-86393.87		
			Bot Cable Norm	8	98055.26		
			Bot Cable Tan	8	177.17		
		Top Guy Pull-Off	Max Tension	2	27884.12	0.00	0.00
			Max. Compression	48	-3896.11	0.00	0.00
			Max. Mx	2	2975.71	77.54	0.00
			Max. My	13	5408.05	0.00	0.24
			Max. Vy	2	-51.70	0.00	0.00
			Max. Vx	13	-0.16	0.00	0.00
T2	680 - 660	Leg	Max Tension	16	103762.97	-949.42	-2239.66
			Max. Compression	34	-207481.05	-688.89	633.57
			Max. Mx	11	-31270.40	-2000.93	1333.10
			Max. My	4	710.40	42.09	-2273.56
			Max. Vy	10	-24863.90	-695.20	548.19
			Max. Vx	4	34187.68	-11.91	575.01
		Diagonal	Max Tension	10	47270.37	0.00	0.00
		Horizontal	Max Tension	1	0.00	0.00	0.00
			Max. Compression	10	-33642.40	0.00	0.00
			Max. Mx	23	-7408.43	33.08	0.00
			Max. My	13	-9297.36	0.00	0.10
			Max. Vy	23	-22.05	0.00	0.00
			Max. Vx	13	-0.07	0.00	0.00
		Top Girt	Max Tension	1	0.00	0.00	0.00
			Max. Compression	10	-36625.27	0.00	0.00
			Max. Mx	20	-15667.68	33.08	0.00
			Max. My	13	-12089.47	0.00	0.10
			Max. Vy	20	-22.05	0.00	0.00
			Max. Vx	13	-0.07	0.00	0.00
T3	660 - 640	Leg	Max Tension	16	150870.56	-293.19	-804.95
			Max. Compression	13	-243409.94	702.31	316.82
			Max. Mx	19	82616.49	1352.83	1116.66
			Max. My	7	78323.97	331.38	-1712.44
			Max. Vy	10	-15428.08	-680.16	81.74
			Max. Vx	7	21984.37	-395.97	119.70
		Diagonal	Max Tension	10	27245.52	0.00	0.00
		Horizontal	Max Tension	1	0.00	0.00	0.00
			Max. Compression	10	-18474.09	0.00	0.00
			Max. Mx	7	-4205.12	33.08	0.00
			Max. My	13	-6823.30	0.00	0.10
			Max. Vy	7	-22.05	0.00	0.00
			Max. Vx	13	-0.07	0.00	0.00
		Top Girt	Max Tension	1	0.00	0.00	0.00
			Max. Compression	10	-22714.28	0.00	0.00
			Max. Mx	25	-5284.27	33.08	0.00
			Max. My	13	-8101.04	0.00	0.10
			Max. Vy	25	-22.05	0.00	0.00
			Max. Vx	13	-0.07	0.00	0.00
T4	640 - 620	Leg	Max Tension	16	152833.96	7.44	-378.32
			Max. Compression	13	-247612.67	316.85	109.03
			Max. Mx	29	-217861.14	-1009.42	114.39
			Max. My	4	144853.96	12.04	-1104.52

Section No.	Elevation ft	Component Type	Condition	Gov. Load Comb.	Axial lb	Major Axis Moment lb-ft	Minor Axis Moment lb-ft
			Max. Vy	32	-10983.49	-56.32	16.06
			Max. Vx	4	11048.61	3.35	-183.77
		Diagonal	Max Tension	29	12175.26	0.00	0.00
		Horizontal	Max Tension	1	0.00	0.00	0.00
			Max. Compression	13	-9346.40	0.00	0.00
			Max. Mx	22	-4879.14	33.08	0.00
			Max. My	15	-6920.94	0.00	0.09
			Max. Vy	22	-22.05	0.00	0.00
			Max. Vx	15	-0.06	0.00	0.00
		Top Girt	Max Tension	1	0.00	0.00	0.00
			Max. Compression	13	-10117.34	0.00	0.00
			Max. Mx	14	-5746.52	33.08	0.00
			Max. My	15	-7717.08	0.00	0.09
			Max. Vy	33	-22.05	0.00	0.00
			Max. Vx	15	-0.06	0.00	0.00
T5	620 - 600	Leg	Max Tension	16	152831.26	210.38	-60.73
			Max. Compression	13	-239891.18	407.48	252.36
			Max. Mx	29	-170272.06	-1619.67	-236.57
			Max. My	20	-175671.70	-17.43	1629.00
			Max. Vy	29	-19400.63	0.58	160.90
			Max. Vx	20	20831.83	31.81	-107.38
		Diagonal	Max Tension	23	18785.40	0.00	0.00
		Horizontal	Max Tension	1	0.00	0.00	0.00
			Max. Compression	23	-13341.36	0.00	0.00
			Max. Mx	29	-10073.03	33.08	0.00
			Max. My	15	-8359.67	0.00	0.09
			Max. Vy	29	-22.05	0.00	0.00
			Max. Vx	15	-0.06	0.00	0.00
		Top Girt	Max Tension	1	0.00	0.00	0.00
			Max. Compression	13	-10175.48	0.00	0.00
			Max. Mx	9	-8085.78	33.08	0.00
			Max. My	15	-7633.28	0.00	0.09
			Max. Vy	9	-22.05	0.00	0.00
			Max. Vx	15	-0.06	0.00	0.00
T6	600 - 580	Leg	Max Tension	16	110642.68	157.46	-148.58
			Max. Compression	13	-193808.45	537.13	85.04
			Max. Mx	29	-79979.84	-2281.64	-727.83
			Max. My	20	-83016.03	-23.94	2419.53
			Max. Vy	29	-29122.62	148.21	242.34
			Max. Vx	20	32360.88	32.02	-277.56
		Diagonal	Max Tension	8	33268.08	0.00	0.00
		Horizontal	Max Tension	1	0.00	0.00	0.00
			Max. Compression	23	-24021.06	0.00	0.00
			Max. Mx	37	-21023.51	33.08	0.00
			Max. My	15	-9401.13	0.00	0.08
			Max. Vy	37	-22.05	0.00	0.00
			Max. Vx	15	-0.05	0.00	0.00
		Top Girt	Max Tension	1	0.00	0.00	0.00
			Max. Compression	23	-15963.36	0.00	0.00
			Max. Mx	10	-8011.79	33.08	0.00
			Max. My	15	-8751.94	0.00	0.08
			Max. Vy	10	-22.05	0.00	0.00
			Max. Vx	15	-0.06	0.00	0.00
T7	580 - 560	Leg	Max Tension	32	102022.69	-3185.62	-2130.28
			Max. Compression	2	-242329.45	-15.78	834.03
			Max. Mx	34	83426.12	-3227.54	-2272.68
			Max. My	22	31196.90	-63.26	3610.41
			Max. Vy	29	-39287.98	155.79	-89.63
			Max. Vx	20	44999.02	8.58	-224.81
		Diagonal	Max Tension	8	51879.58	0.00	0.00
		Horizontal	Max Tension	1	0.00	0.00	0.00

Section No.	Elevation ft	Component Type	Condition	Gov. Load Comb.	Axial lb	Major Axis Moment lb-ft	Minor Axis Moment lb-ft
			Max. Compression	8	-38107.54	0.00	0.00
			Max. Mx	9	-7309.89	33.08	0.00
			Max. My	12	-10608.53	0.00	0.08
			Max. Vy	9	-22.05	0.00	0.00
			Max. Vx	12	-0.05	0.00	0.00
		Top Girt	Max Tension	1	0.00	0.00	0.00
			Max. Compression	8	-27224.10	0.00	0.00
			Max. Mx	25	-25415.47	33.08	0.00
			Max. My	15	-9527.15	0.00	0.08
			Max. Vy	25	-22.05	0.00	0.00
			Max. Vx	15	-0.05	0.00	0.00
T8	560 - 540	Leg	Max Tension	32	102020.22	-44.57	105.85
			Max. Compression	26	-297495.92	279.42	-386.15
			Max. Mx	29	98201.75	3437.37	1574.80
			Max. My	20	100626.68	71.53	-3976.71
			Max. Vy	29	-39288.08	160.86	-85.13
			Max. Vx	20	45006.07	71.10	-3976.16
		Diagonal	Max Tension	9	63526.74	0.00	0.00
		Horizontal	Max Tension	1	0.00	0.00	0.00
			Max. Compression	9	-47485.00	0.00	0.00
			Max. Mx	29	-20298.11	33.08	0.00
			Max. My	12	-7985.62	0.00	0.09
			Max. Vy	29	-22.05	0.00	0.00
			Max. Vx	12	-0.06	0.00	0.00
		Top Girt	Max Tension	1	0.00	0.00	0.00
			Max. Compression	8	-40496.35	0.00	0.00
			Max. Mx	9	-8277.57	33.08	0.00
			Max. My	12	-13994.35	0.00	0.08
			Max. Vy	9	-22.05	0.00	0.00
			Max. Vx	12	-0.05	0.00	0.00
		Guy A	Bottom Tension	22	195059.65		
			Top Tension	22	198750.21		
			Top Cable Vert	22	133077.32		
			Top Cable Norm	22	147621.27		
			Top Cable Tan	22	189.11		
			Bot Cable Vert	22	-121120.63		
			Bot Cable Norm	22	152898.74		
			Bot Cable Tan	22	189.11		
		Guy B	Bottom Tension	34	202875.32		
			Top Tension	34	206059.75		
			Top Cable Vert	34	137986.62		
			Top Cable Norm	34	153036.94		
			Top Cable Tan	34	92.50		
			Bot Cable Vert	34	-127376.83		
			Bot Cable Norm	34	157903.54		
			Bot Cable Tan	34	92.50		
		Guy C	Bottom Tension	10	189824.58		
			Top Tension	10	193832.47		
			Top Cable Vert	10	128813.87		
			Top Cable Norm	10	144837.67		
			Top Cable Tan	10	247.47		
			Bot Cable Vert	10	-116054.79		
			Bot Cable Norm	10	150215.16		
			Bot Cable Tan	10	247.47		
		Top Guy Pull-Off	Max Tension	4	51080.01	0.00	0.00
			Max. Compression	1	0.00	0.00	0.00
			Max. Mx	10	25145.38	77.54	0.00
			Max. My	12	11571.37	0.00	0.20
			Max. Vy	10	-51.70	0.00	0.00
			Max. Vx	12	-0.13	0.00	0.00
T9	540 - 520	Leg	Max Tension	15	94317.91	-986.06	-2631.61

Section No.	Elevation ft	Component Type	Condition	Gov. Load Comb.	Axial lb	Major Axis Moment lb-ft	Minor Axis Moment lb-ft
			Max. Compression	12	-284083.39	420.42	782.89
			Max. Mx	9	-119376.55	2659.49	-2952.25
			Max. My	3	-37200.81	75.35	-3960.50
			Max. Vy	9	-29266.29	221.21	-206.48
			Max. Vx	3	41275.48	33.81	-521.10
		Diagonal	Max Tension	9	54835.43	0.00	0.00
		Horizontal	Max Tension	1	0.00	0.00	0.00
			Max. Compression	9	-39220.33	0.00	0.00
			Max. Mx	34	-10103.00	33.08	0.00
			Max. My	12	-8958.92	0.00	0.09
			Max. Vy	34	-22.05	0.00	0.00
			Max. Vx	12	-0.06	0.00	0.00
		Top Girt	Max Tension	1	0.00	0.00	0.00
			Max. Compression	9	-43343.63	0.00	0.00
			Max. Mx	30	-37721.24	33.08	0.00
			Max. My	12	-8482.01	0.00	0.09
			Max. Vy	30	-22.05	0.00	0.00
			Max. Vx	12	-0.06	0.00	0.00
T10	520 - 500	Leg	Max Tension	15	160890.29	-292.47	-1164.94
			Max. Compression	12	-354796.25	635.92	616.83
			Max. Mx	18	54247.78	1714.08	1543.00
			Max. My	3	89615.69	45.85	-2239.71
			Max. Vy	9	-21011.90	-815.25	111.87
			Max. Vx	3	27815.64	35.86	77.98
		Diagonal	Max Tension	9	36815.24	0.00	0.00
		Horizontal	Max Tension	1	0.00	0.00	0.00
			Max. Compression	9	-25431.41	0.00	0.00
			Max. Mx	33	-4030.31	33.08	0.00
			Max. My	12	-6383.28	0.00	0.08
			Max. Vy	33	-22.05	0.00	0.00
			Max. Vx	12	-0.05	0.00	0.00
		Top Girt	Max Tension	1	0.00	0.00	0.00
			Max. Compression	9	-30364.28	0.00	0.00
			Max. Mx	34	-9025.04	33.08	0.00
			Max. My	12	-7368.64	0.00	0.08
			Max. Vy	34	-22.05	0.00	0.00
			Max. Vx	12	-0.06	0.00	0.00
T11	500 - 480	Leg	Max Tension	15	162801.05	282.35	-312.72
			Max. Compression	12	-365432.22	415.79	181.08
			Max. Mx	12	-114930.07	1467.84	-726.25
			Max. My	3	154346.31	35.20	-1331.70
			Max. Vy	18	-10359.90	276.73	-235.24
			Max. Vx	36	14233.24	359.15	-106.29
		Diagonal	Max Tension	33	13231.27	0.00	0.00
		Horizontal	Max Tension	1	0.00	0.00	0.00
			Max. Compression	16	-8646.38	0.00	0.00
			Max. Mx	12	-1930.50	33.08	0.00
			Max. My	12	-4301.96	0.00	0.06
			Max. Vy	12	-22.05	0.00	0.00
			Max. Vx	12	-0.04	0.00	0.00
		Top Girt	Max Tension	1	0.00	0.00	0.00
			Max. Compression	33	-12625.15	0.00	0.00
			Max. Mx	21	-4190.97	33.08	0.00
			Max. My	12	-5330.94	0.00	0.07
			Max. Vy	21	-22.05	0.00	0.00
			Max. Vx	12	-0.05	0.00	0.00
T12	480 - 460	Leg	Max Tension	15	160433.64	431.82	-100.45
			Max. Compression	12	-358492.88	671.26	114.65
			Max. Mx	13	-285931.90	1899.00	-449.92
			Max. My	22	-255440.46	16.33	1821.37
			Max. Vy	31	-22031.07	-1809.86	-473.60

Section No.	Elevation ft	Component Type	Condition	Gov. Load Comb.	Axial lb	Major Axis Moment lb-ft	Minor Axis Moment lb-ft
			Max. Vx	22	25266.84	81.02	-284.34
		Diagonal	Max Tension	10	31484.68	0.00	0.00
		Horizontal	Max Tension	1	0.00	0.00	0.00
			Max. Compression	28	-23007.21	0.00	0.00
			Max. Mx	5	-4903.38	33.08	0.00
			Max. My	12	-9876.77	0.00	-0.05
			Max. Vy	5	-22.05	0.00	0.00
			Max. Vx	12	0.03	0.00	0.00
		Top Girt	Max Tension	1	0.00	0.00	0.00
			Max. Compression	28	-12261.06	0.00	0.00
			Max. Mx	14	-7271.41	33.08	0.00
			Max. My	12	-9010.04	0.00	-0.05
			Max. Vy	14	-22.05	0.00	0.00
			Max. Vx	12	0.04	0.00	0.00
T13	460 - 440	Leg	Max Tension	15	93902.20	383.01	-497.80
			Max. Compression	26	-313721.38	356.55	-597.82
			Max. Mx	13	-176327.69	2277.95	-1071.42
			Max. My	21	-183087.24	-11.17	2429.11
			Max. Vy	13	32439.28	2275.65	-1066.64
			Max. Vx	22	37685.62	66.86	-722.27
		Diagonal	Max Tension	10	47356.61	0.00	0.00
		Horizontal	Max Tension	1	0.00	0.00	0.00
			Max. Compression	10	-34853.41	0.00	0.00
			Max. Mx	19	-8464.78	33.08	0.00
			Max. My	31	-9671.17	0.00	-0.05
			Max. Vy	19	-22.05	0.00	0.00
			Max. Vx	31	0.03	0.00	0.00
		Top Girt	Max Tension	1	0.00	0.00	0.00
			Max. Compression	28	-25781.39	0.00	0.00
			Max. Mx	5	-5574.99	33.08	0.00
			Max. My	31	-6651.29	0.00	-0.04
			Max. Vy	5	-22.05	0.00	0.00
			Max. Vx	31	0.03	0.00	0.00
T14	440 - 420	Leg	Max Tension	11	81639.32	2095.94	-1922.55
			Max. Compression	26	-406046.64	574.34	-537.82
			Max. Mx	10	55537.86	3798.93	-3341.17
			Max. My	28	-125306.93	-701.46	4693.58
			Max. Vy	13	41452.23	3726.53	-2842.53
			Max. Vx	22	48786.50	7.04	332.71
		Diagonal	Max Tension	10	62962.78	0.00	0.00
		Horizontal	Max Tension	1	0.00	0.00	0.00
			Max. Compression	10	-46954.03	0.00	0.00
			Max. Mx	3	-23317.09	33.08	0.00
			Max. My	31	-11218.25	0.00	-0.05
			Max. Vy	3	-22.05	0.00	0.00
			Max. Vx	31	0.03	0.00	0.00
		Top Girt	Max Tension	1	0.00	0.00	0.00
			Max. Compression	10	-37943.92	0.00	0.00
			Max. Mx	17	-19238.57	33.08	0.00
			Max. My	31	-10601.38	0.00	-0.05
			Max. Vy	17	-22.05	0.00	0.00
			Max. Vx	31	0.03	0.00	0.00
T15	420 - 400	Leg	Max Tension	11	81636.09	185.29	-330.86
			Max. Compression	26	-432213.03	667.16	-3070.29
			Max. Mx	13	-292868.54	-5429.19	-1377.54
			Max. My	10	-33940.29	-1594.39	4895.09
			Max. Vy	13	41449.66	268.57	-541.86
			Max. Vx	22	48789.92	85.48	-3732.54
		Diagonal	Max Tension	10	62655.97	0.00	0.00
		Horizontal	Max Tension	1	0.00	0.00	0.00
			Max. Compression	8	-36395.83	0.00	0.00

Section No.	Elevation ft	Component Type	Condition	Gov. Load Comb.	Axial lb	Major Axis Moment lb-ft	Minor Axis Moment lb-ft
			Max. Mx	20	-22746.04	33.08	0.00
			Max. My	11	-19255.15	0.00	0.04
			Max. Vy	20	-22.05	0.00	0.00
			Max. Vx	11	-0.02	0.00	0.00
		Top Girt	Max Tension	1	0.00	0.00	0.00
			Max. Compression	10	-47772.12	0.00	0.00
			Max. Mx	27	-43706.15	33.08	0.00
			Max. My	31	-14237.32	0.00	-0.04
			Max. Vy	27	-22.05	0.00	0.00
			Max. Vx	31	0.03	0.00	0.00
		Guy A	Bottom Tension	22	164615.51		
			Top Tension	22	167116.73		
			Top Cable Vert	22	96580.43		
			Top Cable Norm	22	136382.58		
			Top Cable Tan	22	125.41		
			Bot Cable Vert	22	-88256.68		
			Bot Cable Norm	22	138956.86		
			Bot Cable Tan	22	125.41		
		Guy B	Bottom Tension	34	165933.37		
			Top Tension	34	168004.68		
			Top Cable Vert	34	94542.72		
			Top Cable Norm	34	138878.50		
			Top Cable Tan	34	104.89		
			Bot Cable Vert	34	-87352.21		
			Bot Cable Norm	34	141079.64		
			Bot Cable Tan	34	104.89		
		Guy C	Bottom Tension	10	162618.68		
			Top Tension	10	165389.31		
			Top Cable Vert	10	95918.37		
			Top Cable Norm	10	134733.99		
			Top Cable Tan	10	204.86		
			Bot Cable Vert	10	-86955.42		
			Bot Cable Norm	10	137417.42		
			Bot Cable Tan	10	204.86		
		Top Guy Pull-Off	Max Tension	16	49296.17	0.00	0.00
			Max. Compression	14	-1390.34	0.00	0.00
			Max. Mx	11	28862.09	77.54	0.00
			Max. My	31	13868.72	0.00	-0.08
			Max. Vy	11	-51.70	0.00	0.00
			Max. Vx	31	0.05	0.00	0.00
T16	400 - 380	Leg	Max Tension	1	0.00	0.00	0.00
			Max. Compression	15	-307925.69	219.08	250.35
			Max. Mx	14	-132900.02	-2216.76	-2245.53
			Max. My	2	-146300.27	-29.49	3110.48
			Max. Vy	14	-31611.88	2033.07	2017.34
			Max. Vx	2	45783.31	-12.52	961.73
		Diagonal	Max Tension	8	41325.36	0.00	0.00
		Horizontal	Max Tension	1	0.00	0.00	0.00
			Max. Compression	8	-29582.82	0.00	0.00
			Max. Mx	32	-4235.71	33.08	0.00
			Max. My	11	-16176.74	0.00	0.04
			Max. Vy	32	-22.05	0.00	0.00
			Max. Vx	11	-0.03	0.00	0.00
		Top Girt	Max Tension	1	0.00	0.00	0.00
			Max. Compression	8	-33141.24	0.00	0.00
			Max. Mx	6	-28913.90	33.08	0.00
			Max. My	11	-18467.62	0.00	0.04
			Max. Vy	6	-22.05	0.00	0.00
			Max. Vx	11	-0.03	0.00	0.00
T17	380 - 360	Leg	Max Tension	15	50196.11	-362.10	-536.61
			Max. Compression	15	-355615.70	432.09	220.53

Section No.	Elevation ft	Component Type	Condition	Gov. Load Comb.	Axial lb	Major Axis Moment lb-ft	Minor Axis Moment lb-ft
			Max. Mx	14	-132906.91	1883.50	1681.80
			Max. My	2	-146310.83	43.93	-2512.89
			Max. Vy	14	-24627.21	1883.50	1681.80
			Max. Vx	2	33744.07	7.44	298.96
		Diagonal	Max Tension	17	27060.88	0.00	0.00
		Horizontal	Max Tension	1	0.00	0.00	0.00
			Max. Compression	17	-19161.50	0.00	0.00
			Max. Mx	20	-9804.46	33.08	0.00
			Max. My	11	-14112.25	0.00	0.04
			Max. Vy	20	-22.05	0.00	0.00
			Max. Vx	11	-0.03	0.00	0.00
		Top Girt	Max Tension	1	0.00	0.00	0.00
			Max. Compression	17	-22312.27	0.00	0.00
			Max. Mx	3	-14603.86	33.08	0.00
			Max. My	11	-15301.59	0.00	0.04
			Max. Vy	3	-22.05	0.00	0.00
			Max. Vx	11	-0.03	0.00	0.00
T18	360 - 340	Leg	Max Tension	15	56534.70	399.64	-140.33
			Max. Compression	12	-370479.64	405.64	124.88
			Max. Mx	14	-32155.83	1426.27	1072.42
			Max. My	2	-47816.50	32.67	-1763.20
			Max. Vy	14	-17151.35	1426.27	1072.42
			Max. Vx	2	20908.55	23.78	-20.97
		Diagonal	Max Tension	14	17234.34	0.00	0.00
		Horizontal	Max Tension	18	372.46	0.00	0.00
			Max. Compression	14	-12599.85	0.00	0.00
			Max. Mx	15	-362.74	33.08	0.00
			Max. My	31	-3166.09	0.00	-0.04
			Max. Vy	8	-22.05	0.00	0.00
			Max. Vx	31	0.03	0.00	0.00
		Top Girt	Max Tension	1	0.00	0.00	0.00
			Max. Compression	14	-14116.42	0.00	0.00
			Max. Mx	20	-6334.71	33.08	0.00
			Max. My	31	-4026.88	0.00	-0.03
			Max. Vy	20	-22.05	0.00	0.00
			Max. Vx	31	0.02	0.00	0.00
T19	340 - 320	Leg	Max Tension	15	51196.87	497.60	-65.08
			Max. Compression	15	-363741.34	606.89	162.46
			Max. Mx	12	-308454.20	1672.08	-509.79
			Max. My	21	-239570.79	67.49	1685.02
			Max. Vy	30	-17656.87	-1571.56	-597.09
			Max. Vx	21	22084.01	10.75	-155.17
		Diagonal	Max Tension	33	27310.70	0.00	0.00
		Horizontal	Max Tension	1	0.00	0.00	0.00
			Max. Compression	15	-19812.09	0.00	0.00
			Max. Mx	26	-8838.90	33.08	0.00
			Max. My	31	-3865.05	0.00	-0.04
			Max. Vy	26	-22.05	0.00	0.00
			Max. Vx	31	0.03	0.00	0.00
		Top Girt	Max Tension	1	0.00	0.00	0.00
			Max. Compression	15	-11573.01	0.00	0.00
			Max. Mx	12	-9600.20	33.08	0.00
			Max. My	31	-3501.38	0.00	-0.04
			Max. Vy	12	-22.05	0.00	0.00
			Max. Vx	31	0.03	0.00	0.00
T20	320 - 300	Leg	Max Tension	1	0.00	0.00	0.00
			Max. Compression	15	-326173.14	631.59	60.00
			Max. Mx	12	-210609.60	1993.53	-736.17
			Max. My	15	-220677.73	-135.45	2131.77
			Max. Vy	30	-26460.16	-1878.46	-800.68
			Max. Vx	21	33385.80	10.62	-673.04

Section No.	Elevation ft	Component Type	Condition	Gov. Load Comb.	Axial lb	Major Axis Moment lb-ft	Minor Axis Moment lb-ft
		Diagonal	Max Tension	9	41456.66	0.00	0.00
		Horizontal	Max Tension	1	0.00	0.00	0.00
			Max. Compression	9	-30612.52	0.00	0.00
			Max. Mx	2	-13348.16	33.08	0.00
			Max. My	13	-5153.94	0.00	-0.04
			Max. Vy	2	-22.05	0.00	0.00
			Max. Vx	13	0.03	0.00	0.00
		Top Girt	Max Tension	1	0.00	0.00	0.00
			Max. Compression	15	-22465.32	0.00	0.00
			Max. Mx	4	-2563.96	33.08	0.00
			Max. My	31	-4226.15	0.00	-0.04
			Max. Vy	4	-22.05	0.00	0.00
			Max. Vx	31	0.03	0.00	0.00
T21	300 - 280	Leg	Max Tension	33	24481.42	-3113.83	-2978.91
			Max. Compression	28	-386994.08	196.48	-448.98
			Max. Mx	12	-72324.38	3326.01	-2494.50
			Max. My	15	-168402.92	1026.85	4286.25
			Max. Vy	12	34371.78	3326.01	-2494.50
			Max. Vx	21	43284.32	-46.49	394.12
		Diagonal	Max Tension	9	55674.04	0.00	0.00
		Horizontal	Max Tension	1	0.00	0.00	0.00
			Max. Compression	9	-41459.61	0.00	0.00
			Max. Mx	2	-20921.55	33.08	0.00
			Max. My	13	-6792.26	0.00	-0.04
			Max. Vy	2	-22.05	0.00	0.00
			Max. Vx	13	0.03	0.00	0.00
		Top Girt	Max Tension	1	0.00	0.00	0.00
			Max. Compression	9	-33283.22	0.00	0.00
			Max. Mx	3	-4479.36	33.08	0.00
			Max. My	13	-6077.04	0.00	-0.04
			Max. Vy	3	-22.05	0.00	0.00
			Max. Vx	13	0.03	0.00	0.00
T22	280 - 260	Leg	Max Tension	33	24478.76	-388.07	-421.20
			Max. Compression	28	-429095.63	546.68	-200.18
			Max. Mx	31	-303280.93	5260.14	-1308.32
			Max. My	7	-151131.39	-1104.52	4889.02
			Max. Vy	14	-38014.19	1146.57	719.71
			Max. Vx	2	49748.02	36.22	2850.51
		Diagonal	Max Tension	9	55077.21	0.00	0.00
		Horizontal	Max Tension	1	0.00	0.00	0.00
			Max. Compression	7	-37187.42	0.00	0.00
			Max. Mx	2	-30010.30	33.08	0.00
			Max. My	13	-25845.32	0.00	-0.03
			Max. Vy	2	-22.05	0.00	0.00
			Max. Vx	13	0.02	0.00	0.00
		Top Girt	Max Tension	1	0.00	0.00	0.00
			Max. Compression	9	-42170.64	0.00	0.00
			Max. Mx	2	-21422.41	33.08	0.00
			Max. My	13	-9091.06	0.00	-0.04
			Max. Vy	2	-22.05	0.00	0.00
			Max. Vx	13	0.02	0.00	0.00
		Guy A	Bottom Tension	24	143941.93		
			Top Tension	24	145469.27		
			Top Cable Vert	24	70193.71		
			Top Cable Norm	24	127410.47		
			Top Cable Tan	24	850.44		
			Bot Cable Vert	24	-64593.69		
			Bot Cable Norm	24	128613.99		
			Bot Cable Tan	24	2318.70		
		Guy B	Bottom Tension	33	141189.56		
			Top Tension	33	142388.96		

Section No.	Elevation ft	Component Type	Condition	Gov. Load Comb.	Axial lb	Major Axis Moment lb-ft	Minor Axis Moment lb-ft
			Top Cable Vert	33	63857.00		
			Top Cable Norm	33	127267.02		
			Top Cable Tan	33	67.49		
			Bot Cable Vert	33	-59492.28		
			Bot Cable Norm	33	128043.57		
			Bot Cable Tan	33	67.49		
		Guy C	Bottom Tension	6	145089.95		
			Top Tension	6	146892.82		
			Top Cable Vert	6	74019.18		
			Top Cable Norm	6	126878.03		
			Top Cable Tan	6	791.94		
			Bot Cable Vert	6	-67992.44		
			Bot Cable Norm	6	128151.90		
			Bot Cable Tan	6	2283.02		
		Top Guy Pull-Off	Max Tension	15	50205.70	0.00	0.00
			Max. Compression	1	0.00	0.00	0.00
			Max. Mx	26	43391.56	77.54	0.00
			Max. My	13	6147.35	0.00	-0.08
			Max. Vy	26	-51.70	0.00	0.00
			Max. Vx	13	0.05	0.00	0.00
T23	260 - 240	Leg	Max Tension	14	67790.73	-2092.27	-1847.88
			Max. Compression	14	-456306.41	469.42	193.59
			Max. Mx	14	-96321.23	4314.59	3507.97
			Max. My	2	-118799.52	242.05	-5440.15
			Max. Vy	14	-38012.92	1146.73	718.73
			Max. Vx	2	49744.84	139.02	-1294.91
		Diagonal	Max Tension	7	43551.33	0.00	0.00
		Horizontal	Max Tension	1	0.00	0.00	0.00
			Max. Compression	7	-31277.50	0.00	0.00
			Max. Mx	26	-26340.76	33.08	0.00
			Max. My	13	-22378.65	0.00	-0.03
			Max. Vy	26	-22.05	0.00	0.00
			Max. Vx	13	0.02	0.00	0.00
		Top Girt	Max Tension	1	0.00	0.00	0.00
			Max. Compression	7	-34796.04	0.00	0.00
			Max. Mx	11	-16155.31	33.08	0.00
			Max. My	13	-25152.01	0.00	-0.03
			Max. Vy	11	-22.05	0.00	0.00
			Max. Vx	13	0.02	0.00	0.00
T24	240 - 220	Leg	Max Tension	14	179941.74	-1838.48	-767.91
			Max. Compression	11	-554024.38	-80.31	-468.19
			Max. Mx	14	67575.17	2848.75	2038.17
			Max. My	2	41022.57	178.59	-3381.13
			Max. Vy	16	-29701.48	47.42	-110.14
			Max. Vx	4	37563.14	86.21	67.06
		Diagonal	Max Tension	25	29691.03	0.00	0.00
		Horizontal	Max Tension	1	0.00	0.00	0.00
			Max. Compression	25	-21248.30	0.00	0.00
			Max. Mx	26	-2937.97	33.08	0.00
			Max. My	12	-17620.33	0.00	-0.04
			Max. Vy	26	-22.05	0.00	0.00
			Max. Vx	12	0.03	0.00	0.00
		Top Girt	Max Tension	1	0.00	0.00	0.00
			Max. Compression	25	-24425.58	0.00	0.00
			Max. Mx	26	-4199.83	33.08	0.00
			Max. My	13	-21256.23	0.00	-0.03
			Max. Vy	26	-22.05	0.00	0.00
			Max. Vx	13	0.02	0.00	0.00
T25	220 - 200	Leg	Max Tension	14	238395.93	441.88	160.50
			Max. Compression	11	-608614.56	1778.44	-295.74
			Max. Mx	11	-236155.86	2085.71	576.97

Section No.	Elevation ft	Component Type	Condition	Gov. Load Comb.	Axial lb	Major Axis Moment lb-ft	Minor Axis Moment lb-ft
			Max. My	2	149165.52	157.05	-2050.70
			Max. Vy	16	-21488.62	-446.61	16.75
			Max. Vx	4	24885.50	101.57	349.24
		Diagonal	Max Tension	13	21356.31	0.00	0.00
		Horizontal	Max Tension	1	0.00	0.00	0.00
			Max. Compression	11	-16037.60	0.00	0.00
			Max. Mx	17	-8745.93	33.08	0.00
			Max. My	12	-13220.94	0.00	-0.05
			Max. Vy	17	-22.05	0.00	0.00
			Max. Vx	12	0.03	0.00	0.00
		Top Girt	Max Tension	1	0.00	0.00	0.00
			Max. Compression	14	-17326.83	0.00	0.00
			Max. Mx	26	-1129.82	33.08	0.00
			Max. My	12	-16150.86	0.00	-0.04
			Max. Vy	26	-22.05	0.00	0.00
			Max. Vx	12	0.03	0.00	0.00
T26	200 - 180	Leg	Max Tension	14	241462.37	1047.85	224.16
			Max. Compression	11	-619481.77	1259.33	76.97
			Max. Mx	14	234539.97	2525.28	953.75
			Max. My	4	72193.82	35.52	-2152.81
			Max. Vy	34	14146.47	-1860.85	-86.90
			Max. Vx	11	-11672.76	1549.31	1226.07
		Diagonal	Max Tension	11	19042.84	0.00	0.00
		Horizontal	Max Tension	1	0.00	0.00	0.00
			Max. Compression	11	-13208.49	0.00	0.00
			Max. Mx	18	-7592.74	33.08	0.00
			Max. My	12	-8342.22	0.00	-0.06
			Max. Vy	18	-22.05	0.00	0.00
			Max. Vx	12	0.04	0.00	0.00
		Top Girt	Max Tension	1	0.00	0.00	0.00
			Max. Compression	34	-13824.23	0.00	0.00
			Max. Mx	22	-6562.68	33.08	0.00
			Max. My	12	-12058.45	0.00	-0.05
			Max. Vy	22	-22.05	0.00	0.00
			Max. Vx	12	0.04	0.00	0.00
T27	180 - 160	Leg	Max Tension	14	241457.02	1478.34	252.88
			Max. Compression	11	-610203.65	1608.73	-80.65
			Max. Mx	11	115487.55	2388.36	-318.58
			Max. My	11	-604061.43	689.55	2164.64
			Max. Vy	11	17257.59	2290.46	331.51
			Max. Vx	26	20345.71	1314.23	183.04
		Diagonal	Max Tension	8	31825.50	0.00	0.00
		Horizontal	Max Tension	1	0.00	0.00	0.00
			Max. Compression	8	-23773.10	0.00	0.00
			Max. Mx	37	-5046.18	33.08	0.00
			Max. My	12	-4958.96	0.00	-0.07
			Max. Vy	37	-22.05	0.00	0.00
			Max. Vx	12	0.05	0.00	0.00
		Top Girt	Max Tension	1	0.00	0.00	0.00
			Max. Compression	8	-15499.47	0.00	0.00
			Max. Mx	35	-5829.45	33.08	0.00
			Max. My	12	-7232.72	0.00	-0.06
			Max. Vy	35	-22.05	0.00	0.00
			Max. Vx	12	0.04	0.00	0.00
T28	160 - 140	Leg	Max Tension	14	188799.88	1191.78	-692.62
			Max. Compression	11	-557049.34	1424.96	-323.41
			Max. Mx	11	-457559.72	4027.60	-2244.10
			Max. My	26	-385708.28	-1357.65	4346.57
			Max. Vy	11	25299.42	4027.60	-2244.10
			Max. Vx	26	29876.81	-246.93	1843.88
		Diagonal	Max Tension	8	46226.89	0.00	0.00

Section No.	Elevation ft	Component Type	Condition	Gov. Load Comb.	Axial lb	Major Axis Moment lb-ft	Minor Axis Moment lb-ft
		Horizontal	Max Tension	1	0.00	0.00	0.00
			Max. Compression	8	-34532.27	0.00	0.00
			Max. Mx	34	-12585.33	33.08	0.00
			Max. My	12	-6529.29	0.00	-0.07
			Max. Vy	34	-22.05	0.00	0.00
			Max. Vx	12	0.05	0.00	0.00
		Top Girt	Max Tension	1	0.00	0.00	0.00
			Max. Compression	8	-26163.55	0.00	0.00
			Max. Mx	36	-4061.90	33.08	0.00
			Max. My	12	-5887.98	0.00	-0.07
			Max. Vy	36	-22.05	0.00	0.00
			Max. Vx	12	0.05	0.00	0.00
T29	140 - 120	Leg	Max Tension	14	123556.84	-1700.33	-403.06
			Max. Compression	11	-537227.14	-44.01	-517.71
			Max. Mx	29	-331826.66	5684.61	-883.56
			Max. My	37	-389831.87	1541.19	5613.58
			Max. Vy	11	25312.96	1959.91	-240.71
			Max. Vx	26	29888.62	852.92	-672.38
		Diagonal	Max Tension	8	45906.25	0.00	0.00
		Horizontal	Max Tension	1	0.00	0.00	0.00
			Max. Compression	31	-24400.81	0.00	0.00
			Max. Mx	32	-8930.59	33.08	0.00
			Max. My	12	-23967.28	0.00	-0.07
			Max. Vy	32	-22.05	0.00	0.00
			Max. Vx	12	0.05	0.00	0.00
		Top Girt	Max Tension	1	0.00	0.00	0.00
			Max. Compression	8	-34732.71	0.00	0.00
			Max. Mx	33	-12182.07	33.08	0.00
			Max. My	12	-7462.28	0.00	-0.07
			Max. Vy	33	-22.05	0.00	0.00
			Max. Vx	12	0.05	0.00	0.00
		Guy A	Bottom Tension	20	93980.78		
			Top Tension	20	94648.82		
			Top Cable Vert	20	31630.40		
			Top Cable Norm	20	89207.11		
			Top Cable Tan	20	90.05		
			Bot Cable Vert	20	-28985.90		
			Bot Cable Norm	20	89399.08		
			Bot Cable Tan	20	90.05		
		Guy B	Bottom Tension	32	94274.43		
			Top Tension	32	94710.35		
			Top Cable Vert	32	24954.91		
			Top Cable Norm	32	91363.58		
			Top Cable Tan	32	1.98		
			Bot Cable Vert	32	-22884.11		
			Bot Cable Norm	32	91454.83		
			Bot Cable Tan	32	1.98		
		Guy C	Bottom Tension	5	90923.26		
			Top Tension	5	91763.81		
			Top Cable Vert	5	35090.96		
			Top Cable Norm	5	84783.20		
			Top Cable Tan	5	1014.77		
			Bot Cable Vert	5	-31133.86		
			Bot Cable Norm	5	85409.56		
			Bot Cable Tan	5	1711.54		
		Top Guy Pull-Off	Max Tension	2	38494.54	0.00	0.00
			Max. Compression	8	-5547.36	0.00	0.00
			Max. Mx	33	-1120.14	77.54	0.00
			Max. My	12	1861.18	0.00	-0.16
			Max. Vy	33	-51.70	0.00	0.00
			Max. Vx	12	0.11	0.00	0.00

Section No.	Elevation ft	Component Type	Condition	Gov. Load Comb.	Axial lb	Major Axis Moment lb-ft	Minor Axis Moment lb-ft
T30	120 - 100	Leg	Max Tension	14	182770.85	-475.01	1034.61
			Max. Compression	11	-601511.02	1014.81	-1880.59
			Max. Mx	11	-280694.64	3547.79	1090.35
			Max. My	8	-559440.66	200.06	-2548.51
			Max. Vy	28	24087.19	-1433.80	1361.61
			Max. Vx	4	26319.47	210.63	88.77
		Diagonal	Max Tension	31	28960.08	0.00	0.00
		Horizontal	Max Tension	1	0.00	0.00	0.00
			Max. Compression	31	-21732.87	0.00	0.00
			Max. Mx	32	-9640.62	33.08	0.00
			Max. My	11	-19031.17	0.00	-0.08
			Max. Vy	32	-22.05	0.00	0.00
			Max. Vx	11	0.05	0.00	0.00
		Top Girt	Max Tension	1	0.00	0.00	0.00
			Max. Compression	31	-22951.99	0.00	0.00
			Max. Mx	32	-9739.85	33.08	0.00
			Max. My	12	-22430.06	0.00	-0.07
			Max. Vy	32	-22.05	0.00	0.00
			Max. Vx	12	0.05	0.00	0.00
T31	100 - 80	Leg	Max Tension	14	182818.57	1805.46	1665.09
			Max. Compression	11	-618568.33	1038.51	96.03
			Max. Mx	11	-280701.30	3260.79	494.09
			Max. My	8	-559445.97	4.57	-2307.57
			Max. Vy	31	19491.19	320.93	1384.57
			Max. Vx	37	15239.32	-1320.41	-690.56
		Diagonal	Max Tension	31	25936.78	0.00	0.00
		Horizontal	Max Tension	2	113.31	0.00	0.00
			Max. Compression	31	-19512.52	0.00	0.00
			Max. Mx	27	-12739.53	33.08	0.00
			Max. My	11	-16800.04	0.00	-0.08
			Max. Vy	27	-22.05	0.00	0.00
			Max. Vx	11	0.05	0.00	0.00
		Top Girt	Max Tension	2	360.46	0.00	0.00
			Max. Compression	31	-19927.08	0.00	0.00
			Max. Mx	32	-12805.49	33.08	0.00
			Max. My	11	-17871.23	0.00	-0.08
			Max. Vy	32	-22.05	0.00	0.00
			Max. Vx	11	0.05	0.00	0.00
T32	80 - 60	Leg	Max Tension	14	179621.48	1649.79	-89.32
			Max. Compression	11	-614305.78	1518.76	-143.95
			Max. Mx	31	-39750.13	-3257.61	-861.05
			Max. My	26	-467970.57	-753.23	2732.45
			Max. Vy	10	-16451.52	3190.81	-1484.01
			Max. Vx	8	-20890.11	1408.74	1731.56
		Diagonal	Max Tension	8	32232.39	0.00	0.00
		Horizontal	Max Tension	1	0.00	0.00	0.00
			Max. Compression	8	-24370.86	0.00	0.00
			Max. Mx	27	-15618.91	33.08	0.00
			Max. My	11	-12236.30	0.00	-0.07
			Max. Vy	27	-22.05	0.00	0.00
			Max. Vx	11	0.05	0.00	0.00
		Top Girt	Max Tension	2	47.16	0.00	0.00
			Max. Compression	11	-18705.98	0.00	0.00
			Max. Mx	27	-13598.37	33.08	0.00
			Max. My	11	-14002.94	0.00	-0.07
			Max. Vy	27	-22.05	0.00	0.00
			Max. Vx	11	0.05	0.00	0.00
T33	60 - 40	Leg	Max Tension	14	125645.51	1105.94	-929.81
			Max. Compression	11	-574545.04	1340.10	-405.40
			Max. Mx	10	-166548.41	2676.04	-1782.06
			Max. My	11	-567895.65	202.31	3734.53

Section No.	Elevation ft	Component Type	Condition	Gov. Load Comb.	Axial lb	Major Axis Moment lb-ft	Minor Axis Moment lb-ft
			Max. Vy	8	19225.71	2274.22	-2694.71
			Max. Vx	14	28317.41	744.42	589.54
		Diagonal	Max Tension	8	43596.03	0.00	0.00
		Horizontal	Max Tension	1	0.00	0.00	0.00
			Max. Compression	8	-32520.89	0.00	0.00
			Max. Mx	28	-16465.17	33.08	0.00
			Max. My	11	-6969.80	0.00	-0.06
			Max. Vy	28	-22.05	0.00	0.00
			Max. Vx	11	0.04	0.00	0.00
		Top Girt	Max Tension	1	0.00	0.00	0.00
			Max. Compression	8	-26170.02	0.00	0.00
			Max. Mx	26	-16405.66	33.08	0.00
			Max. My	11	-8357.69	0.00	-0.06
			Max. Vy	26	-22.05	0.00	0.00
			Max. Vx	11	0.04	0.00	0.00
T34	40 - 20	Leg	Max Tension	14	25927.70	770.21	462.63
			Max. Compression	22	-507854.88	-117.34	1078.30
			Max. Mx	10	-191564.03	1392.15	-329.05
			Max. My	14	-389759.58	580.92	2188.23
			Max. Vy	8	22172.24	1285.01	-1611.22
			Max. Vx	14	34515.82	-1024.69	-713.26
		Diagonal	Max Tension	8	52133.65	0.00	0.00
		Horizontal	Max Tension	1	0.00	0.00	0.00
			Max. Compression	8	-39482.14	0.00	0.00
			Max. Mx	28	-18570.73	33.08	0.00
			Max. My	11	-6074.56	0.00	-0.05
			Max. Vy	28	-22.05	0.00	0.00
			Max. Vx	11	0.03	0.00	0.00
		Top Girt	Max Tension	1	0.00	0.00	0.00
			Max. Compression	8	-34434.44	0.00	0.00
			Max. Mx	28	-18413.62	33.08	0.00
			Max. My	11	-6109.18	0.00	-0.05
			Max. Vy	28	-22.05	0.00	0.00
			Max. Vx	11	0.04	0.00	0.00
T35	20 - 10	Leg	Max Tension	1	0.00	0.00	0.00
			Max. Compression	22	-408399.40	-10.69	2393.36
			Max. Mx	29	-282831.40	-19018.33	-2664.87
			Max. My	8	-237497.20	-7631.19	19844.30
			Max. Vy	8	30963.78	-15050.52	-14112.53
			Max. Vx	26	45038.25	-14704.76	-7888.08
		Diagonal	Max Tension	8	66051.84	0.00	0.00
		Horizontal	Max Tension	1	0.00	0.00	0.00
			Max. Compression	8	-44207.13	0.00	0.00
			Max. Mx	28	-22800.37	33.08	0.00
			Max. My	11	-10598.82	0.00	-0.04
			Max. Vy	28	-22.05	0.00	0.00
			Max. Vx	11	0.03	0.00	0.00
		Top Girt	Max Tension	1	0.00	0.00	0.00
			Max. Compression	14	-40810.24	0.00	0.00
			Max. Mx	28	-19453.83	33.08	0.00
			Max. My	11	-6472.70	0.00	-0.04
			Max. Vy	28	-22.05	0.00	0.00
			Max. Vx	11	0.03	0.00	0.00
T36	10 - 0	Leg	Max Tension	1	0.00	0.00	0.00
			Max. Compression	13	-373478.79	275.57	-101402.34
			Max. Mx	10	-337873.50	9937.01	16972.75
			Max. My	11	-361438.11	392.96	-102970.32
			Max. Vy	22	82272.36	647.75	-223.58
			Max. Vx	11	21802.71	6600.45	-101347.56
		Diagonal	Max Tension	11	36932.19	0.00	0.00
			Max. Compression	11	-37731.28	0.00	0.00

Section No.	Elevation ft	Component Type	Condition	Gov. Load Comb.	Axial lb	Major Axis Moment lb-ft	Minor Axis Moment lb-ft
			Max. Mx	14	28085.01	15.54	0.00
			Max. My	8	-35193.61	0.00	10.01
			Max. Vy	14	-11.93	0.00	0.00
			Max. Vx	8	-7.68	0.00	0.00
		Horizontal	Max Tension	14	1185.39	14.45	2.62
			Max. Compression	13	-354.60	0.00	0.00
			Max. Mx	26	969.38	16.25	3.01
			Max. My	12	621.27	15.06	5.31
			Max. Vy	26	21.03	0.00	0.00
			Max. Vx	12	-5.80	0.00	0.00
		Top Girt	Max Tension	16	62472.98	-1373.91	-121.21
			Max. Compression	1	0.00	0.00	0.00
			Max. Mx	16	47086.56	-1377.29	-59.79
			Max. My	11	49536.12	-1214.29	-166.76
			Max. Vy	16	491.88	-1377.29	-59.79
			Max. Vx	11	-61.05	-1214.29	-166.76

Maximum Reactions

Location	Condition	Gov. Load Comb.	Vertical lb	Horizontal, X lb	Horizontal, Z lb
Mast	Max. Vert	16	901664.37	3787.10	475.21
	Max. H_x	32	843099.59	9010.36	5166.39
	Max. H_z	33	842814.34	8920.55	5190.65
	Max. M_x	1	0.00	-73.82	-57.79
	Max. M_z	1	0.00	-73.82	-57.79
	Max. Torsion	11	118780.02	-3103.13	3031.71
	Min. Vert	40	421006.05	-1040.59	477.12
	Min. H_x	8	808386.67	-6578.55	2597.76
	Min. H_z	20	824088.94	-966.19	-8915.00
	Min. M_x	1	0.00	-73.82	-57.79
	Min. M_z	1	0.00	-73.82	-57.79
	Min. Torsion	29	-117752.04	7753.86	3267.46
Guy C @ 878.8 ft Elev -177.6 ft Azimuth 240 deg	Max. Vert	28	-22202.58	-14157.86	8149.19
	Max. H_x	28	-22202.58	-14157.86	8149.19
	Max. H_z	7	-273036.21	-311884.59	194529.34
	Min. Vert	10	-286260.62	-330889.87	191763.08
	Min. H_x	10	-286260.62	-330889.87	191763.08
	Min. H_z	28	-22202.58	-14157.86	8149.19
Guy B @ 680.8 ft Elev -28.3 ft Azimuth 120 deg	Max. Vert	16	-21813.30	12701.30	7313.54
	Max. H_x	34	-309311.02	344485.32	199168.62
	Max. H_z	34	-309311.02	344485.32	199168.62
	Min. Vert	34	-309311.02	344485.32	199168.62
	Min. H_x	16	-21813.30	12701.30	7313.54
	Min. H_z	16	-21813.30	12701.30	7313.54
Guy A @ 794.8 ft Elev -120.2 ft Azimuth 0 deg	Max. Vert	4	-22710.73	-7.95	-16011.35
	Max. H_x	31	-165687.12	28229.21	-208383.36
	Max. H_z	4	-22710.73	-7.95	-16011.35
	Min. Vert	22	-297052.88	468.15	-387876.99
	Min. H_x	13	-158625.65	-28473.27	-200438.33

Location	Condition	Gov. Load Comb.	Vertical lb	Horizontal, X lb	Horizontal, Z lb
	Min. H_z	22	-297052.88	468.15	-387876.99
Guy C @ 828.8 ft Elev -187.8 ft Azimuth 240 deg	Max. Vert	27	-1121.85	-3987.95	2295.43
	Max. H_x	27	-1121.85	-3987.95	2295.43
	Max. H_z	6	-98630.98	-181848.15	109587.75
	Min. Vert	6	-98630.98	-181848.15	109587.75
	Min. H_x	12	-98102.57	-184857.94	102311.55
	Min. H_z	27	-1121.85	-3987.95	2295.43
Guy B @ 630.8 ft Elev -30 ft Azimuth 120 deg	Max. Vert	15	-215.40	3268.12	1885.25
	Max. H_x	33	-81873.44	188383.98	108839.28
	Max. H_z	36	-79586.60	182083.94	109144.75
	Min. Vert	33	-81873.44	188383.98	108839.28
	Min. H_x	15	-215.40	3268.12	1885.25
	Min. H_z	15	-215.40	3268.12	1885.25
Guy A @ 744.8 ft Elev -117.9 ft Azimuth 0 deg	Max. Vert	3	-731.88	-4.95	-4624.70
	Max. H_x	30	-50285.17	8535.54	-116984.59
	Max. H_z	3	-731.88	-4.95	-4624.70
	Min. Vert	21	-93016.62	220.14	-215835.19
	Min. H_x	12	-50826.82	-8843.80	-118100.43
	Min. H_z	21	-93016.62	220.14	-215835.19

Tower Mast Reaction Summary

Load Combination	Vertical lb	$Shear_x$ lb	$Shear_z$ lb	Overturning Moment, M_x lb-ft	Overturning Moment, M_z lb-ft	Torque lb-ft
Dead Only	422307.40	73.82	57.79	0.00	0.00	-12.57
1.2D+1.0W (pattern 1) 0 deg - No Ice+1.0 Guy	834467.55	-2251.92	-3187.54	0.00	0.00	-8957.52
1.2D+1.0W (pattern 2) 0 deg - No Ice+1.0 Guy	845685.04	-2681.37	-376.99	0.00	0.00	-8965.51
1.2D+1.0W (pattern 3) 0 deg - No Ice+1.0 Guy	891029.09	-2768.20	444.34	0.00	0.00	-8883.62
1.2D+1.0W (pattern 1) 30 deg - No Ice+1.0 Guy	828450.11	3633.09	-1549.29	0.00	0.00	-63815.39
1.2D+1.0W (pattern 2) 30 deg - No Ice+1.0 Guy	837110.10	3507.81	801.18	0.00	0.00	-63853.84
1.2D+1.0W (pattern 3) 30 deg - No Ice+1.0 Guy	871042.35	3129.12	1201.09	0.00	0.00	-63925.31
1.2D+1.0W (pattern 1) 60 deg - No Ice+1.0 Guy	808386.67	6578.55	-2597.76	0.00	0.00	-112926.49
1.2D+1.0W (pattern 2) 60 deg - No Ice+1.0 Guy	810191.21	6238.47	-2166.94	0.00	0.00	-112293.58
1.2D+1.0W (pattern 3) 60 deg - No Ice+1.0 Guy	829548.09	6065.11	-2087.90	0.00	0.00	-112513.17
1.2D+1.0W (pattern 1) 90 deg - No Ice+1.0 Guy	827425.37	3103.13	-3031.71	0.00	0.00	-118780.02
1.2D+1.0W (pattern 2) 90 deg - No Ice+1.0 Guy	840019.91	626.66	-4482.32	0.00	0.00	-117124.20
1.2D+1.0W (pattern 3) 90 deg - No Ice+1.0 Guy	869842.71	203.29	-4339.12	0.00	0.00	-117138.12
1.2D+1.0W (pattern 1) 120 deg	843994.09	65.86	1499.46	0.00	0.00	-90584.48

Load Combination	Vertical	$Shear_x$	$Shear_z$	Overturning Moment, M_x	Overturning Moment, M_z	Torque
	lb	lb	lb	lb-ft	lb-ft	lb-ft
- No Ice+1.0 Guy 1.2D+1.0W (pattern 2) 120 deg	858350.58	-3006.35	-54.83	0.00	0.00	-89791.08
- No Ice+1.0 Guy 1.2D+1.0W (pattern 3) 120 deg	901664.37	-3787.10	-475.21	0.00	0.00	-89554.54
- No Ice+1.0 Guy 1.2D+1.0W (pattern 1) 150 deg	831073.99	-1577.41	6664.99	0.00	0.00	-49486.54
- No Ice+1.0 Guy 1.2D+1.0W (pattern 2) 150 deg	843928.59	-4216.13	5542.96	0.00	0.00	-49608.38
- No Ice+1.0 Guy 1.2D+1.0W (pattern 3) 150 deg	872774.15	-4175.18	5199.56	0.00	0.00	-50167.17
- No Ice+1.0 Guy 1.2D+1.0W (pattern 1) 180 deg	824088.94	966.19	8915.00	0.00	0.00	6377.73
- No Ice+1.0 Guy 1.2D+1.0W (pattern 2) 180 deg	825500.33	1210.78	8601.66	0.00	0.00	6319.51
- No Ice+1.0 Guy 1.2D+1.0W (pattern 3) 180 deg	845910.78	1248.38	8373.59	0.00	0.00	6290.99
- No Ice+1.0 Guy 1.2D+1.0W (pattern 1) 210 deg	833254.09	-530.94	6297.23	0.00	0.00	61134.57
- No Ice+1.0 Guy 1.2D+1.0W (pattern 2) 210 deg	840131.34	1248.96	5343.23	0.00	0.00	61210.60
- No Ice+1.0 Guy 1.2D+1.0W (pattern 3) 210 deg	875384.20	1337.94	4870.17	0.00	0.00	61239.45
- No Ice+1.0 Guy 1.2D+1.0W (pattern 1) 240 deg	826413.86	-5211.31	1872.92	0.00	0.00	102499.94
- No Ice+1.0 Guy 1.2D+1.0W (pattern 2) 240 deg	836079.79	-3190.56	447.35	0.00	0.00	101525.09
- No Ice+1.0 Guy 1.2D+1.0W (pattern 3) 240 deg	882926.01	-2616.47	53.88	0.00	0.00	101140.25
- No Ice+1.0 Guy 1.2D+1.0W (pattern 1) 270 deg	840073.05	-7753.86	-3267.46	0.00	0.00	117752.04
- No Ice+1.0 Guy 1.2D+1.0W (pattern 2) 270 deg	846988.73	-6284.36	-4571.00	0.00	0.00	116496.92
- No Ice+1.0 Guy 1.2D+1.0W (pattern 3) 270 deg	880401.11	-5997.75	-4385.39	0.00	0.00	116368.78
- No Ice+1.0 Guy 1.2D+1.0W (pattern 1) 300 deg	843099.59	-9010.36	-5166.39	0.00	0.00	98194.78
- No Ice+1.0 Guy 1.2D+1.0W (pattern 2) 300 deg	842814.34	-8920.55	-5190.65	0.00	0.00	97874.27
- No Ice+1.0 Guy 1.2D+1.0W (pattern 3) 300 deg	865014.00	-8697.89	-5133.40	0.00	0.00	97950.02
- No Ice+1.0 Guy 1.2D+1.0W (pattern 1) 330 deg	837662.86	-7587.56	-3797.47	0.00	0.00	48828.18
- No Ice+1.0 Guy 1.2D+1.0W (pattern 2) 330 deg	846769.03	-8139.85	-1544.76	0.00	0.00	48986.67
- No Ice+1.0 Guy 1.2D+1.0W (pattern 3) 330 deg	877733.93	-7834.97	-1479.78	0.00	0.00	49416.35
- No Ice+1.0 Guy Dead+Wind 0 deg - Service+Guy	427343.82	-21.58	-1103.48	0.00	0.00	-1163.31
Dead+Wind 30 deg - Service+Guy	423756.02	582.67	-920.60	0.00	0.00	-9206.47
Dead+Wind 60 deg - Service+Guy	421006.05	1040.59	-477.12	0.00	0.00	-16211.87
Dead+Wind 90 deg - Service+Guy	422994.01	1213.73	136.67	0.00	0.00	-18577.06
Dead+Wind 120 deg - Service+Guy	425451.13	1079.45	727.16	0.00	0.00	-14798.71
Dead+Wind 150 deg - Service+Guy	424354.98	679.53	1128.14	0.00	0.00	-7285.68
Dead+Wind 180 deg - Service+Guy	423191.11	132.61	1243.84	0.00	0.00	1008.89

Load Combination	Vertical	$Shear_x$	$Shear_z$	Overturning Moment, M_x	Overturning Moment, M_z	Torque
	lb	lb	lb	lb-ft	lb-ft	lb-ft
Dead+Wind 210 deg - Service+Guy	426154.97	-441.17	1051.50	0.00	0.00	8895.74
Dead+Wind 240 deg - Service+Guy	429542.27	-911.67	592.88	0.00	0.00	15829.17
Dead+Wind 270 deg - Service+Guy	427651.61	-1090.19	-14.23	0.00	0.00	18353.14
Dead+Wind 300 deg - Service+Guy	425397.94	-970.18	-588.04	0.00	0.00	14721.56
Dead+Wind 330 deg - Service+Guy	426586.19	-590.34	-978.51	0.00	0.00	7165.41

Solution Summary

	Sum of Applied Forces			Sum of Reactions			
Load Comb.	PX	PY	PZ	PX	PY	PZ	% Error
	lb	lb	lb	lb	lb	lb	
1	0.00	-214841.27	0.00	34.60	214841.44	-11.06	0.017%
2	-4414.81	-255439.47	-479387.39	4548.54	255396.38	478512.10	0.163%
3	-4414.81	-255439.47	-485458.59	4558.55	255385.59	484507.86	0.176%
4	-4414.81	-255439.47	**-518344.84**	4575.75	255382.50	517263.90	0.189%
5	229821.75	-247355.11	-406148.50	-229888.12	247315.47	405272.63	0.166%
6	232825.52	-247355.11	-411351.18	-232865.33	247306.98	410416.45	0.176%
7	248939.69	-247355.11	**-439261.75**	-248986.55	247308.63	438242.02	0.182%
8	401796.09	-238774.14	-231988.89	-402053.17	238787.33	232659.96	0.138%
9	406980.39	-238774.14	-234982.05	-407278.09	238792.22	235690.94	0.146%
10	434701.04	-238774.14	-250986.57	-434932.28	238791.07	251745.76	0.143%
11	469326.33	-249384.75	5638.65	-468682.87	249345.72	-5116.73	0.156%
12	475333.87	-249384.75	5638.65	-474624.34	249335.89	-5103.81	0.166%
13	507562.22	-249384.75	5638.65	-506787.83	249338.66	-5043.20	0.173%
14	416091.21	-258929.13	245783.34	-415227.34	258875.16	-245354.69	0.176%
15	421349.02	-258929.13	248818.94	-420431.57	258862.41	-248363.20	0.185%
16	449829.35	-258929.13	265262.07	-448844.41	258863.36	-264771.81	0.189%
17	238977.94	-247905.23	412822.03	-238262.87	247872.34	-412635.47	0.138%
18	241981.71	-247905.23	418024.71	-241239.43	247865.69	-417806.26	0.143%
19	258095.89	-247905.23	445935.28	-257237.51	247867.29	-445692.20	0.156%
20	4866.31	-236311.72	471188.08	-4301.44	236317.00	-471402.28	0.115%
21	4866.31	-236311.72	477174.40	-4270.30	236317.35	-477346.11	0.116%
22	4866.31	-236311.72	509183.44	-4212.97	236317.07	-509346.21	0.120%
23	-229105.76	-244396.08	407407.88	228337.31	244367.06	-407105.05	0.157%
24	-232109.53	-244396.08	412610.56	231353.87	244362.28	-412284.31	0.155%
25	-248223.71	-244396.08	440521.13	247324.03	244360.59	-440134.08	0.175%
26	-410532.66	-252977.05	236217.60	409858.39	252945.70	-235740.50	0.154%
27	-415790.47	-252977.05	239253.20	415103.01	252939.52	-238768.06	0.155%
28	-444270.81	-252977.05	255696.33	443475.42	252936.18	-255137.57	0.170%
29	-469268.85	-242366.45	-4547.93	468783.47	242346.59	5059.13	0.134%
30	-475276.38	-242366.45	-4547.93	474762.13	242340.89	5057.07	0.136%
31	-507504.73	-242366.45	-4547.93	506923.30	242342.43	5131.67	0.147%
32	-406680.24	-232822.06	-239644.25	406790.71	232821.52	239612.70	0.022%
33	-411864.54	-232822.06	-242637.41	412093.90	232824.41	242592.02	0.044%
34	-439585.19	-232822.06	-258641.93	439806.16	232824.44	258585.31	0.041%
35	-238339.87	-243845.96	-411318.82	238560.51	243822.26	410669.33	0.128%
36	-241343.64	-243845.96	-416521.50	241549.68	243817.40	415857.59	0.129%
37	-257457.81	-243845.96	-444432.07	257705.81	243819.03	443655.77	0.143%
38	-285.36	-215459.44	-35030.51	299.59	215459.35	34994.51	0.018%
39	16849.32	-214936.90	-29706.50	-16836.23	214936.77	29663.53	0.021%
40	29409.10	-214382.25	-16980.11	-29383.55	214382.20	16953.88	0.017%
41	34324.50	-215068.08	364.46	-34289.16	215068.09	-352.33	0.017%
42	30397.39	-215685.00	17908.87	-30363.02	215685.00	-17898.15	0.016%

	Sum of Applied Forces			Sum of Reactions			
Load Comb.	PX lb	PY lb	PZ lb	PX lb	PY lb	PZ lb	% Error
43	17441.14	-214972.45	30137.85	-17407.44	214972.48	-30130.35	0.016%
44	314.54	-214223.09	34426.27	-324.93	214222.94	-34391.50	0.017%
45	-16803.04	-214745.63	29787.90	16766.12	214745.41	-29762.61	0.021%
46	-30038.11	-215300.28	17290.57	30005.62	215300.07	-17262.41	0.020%
47	-34320.79	-214614.45	-293.96	34293.24	214614.30	322.16	0.018%
48	-29724.79	-213997.53	-17474.93	29714.55	213997.48	17475.59	0.005%
49	-17399.90	-214710.08	-30040.69	17414.92	214710.04	30009.66	0.016%

Non-Linear Convergence Results

Load Combination	Converged?	Number of Cycles	Displacement Tolerance	Force Tolerance
1	Yes	34	0.00025000	0.00001861
2	Yes	82	0.00023851	0.00015930
3	Yes	79	0.00024930	0.00020840
4	Yes	78	0.00024667	0.00022937
5	Yes	76	0.00023766	0.00017254
6	Yes	74	0.00024757	0.00021126
7	Yes	74	0.00023735	0.00020224
8	Yes	40	0.00023548	0.00016207
9	Yes	40	0.00024802	0.00017776
10	Yes	41	0.00024493	0.00018581
11	Yes	94	0.00023971	0.00017117
12	Yes	92	0.00024498	0.00021002
13	Yes	92	0.00023668	0.00020004
14	Yes	93	0.00024531	0.00018265
15	Yes	90	0.00024949	0.00023631
16	Yes	90	0.00023441	0.00024725
17	Yes	102	0.00024359	0.00017057
18	Yes	100	0.00023955	0.00020024
19	Yes	99	0.00024000	0.00020034
20	Yes	45	0.00024575	0.00019954
21	Yes	47	0.00024210	0.00017494
22	Yes	48	0.00024623	0.00019043
23	Yes	67	0.00024270	0.00013792
24	Yes	66	0.00023793	0.00015832
25	Yes	65	0.00024949	0.00015671
26	Yes	74	0.00024560	0.00014053
27	Yes	72	0.00023947	0.00016654
28	Yes	71	0.00024079	0.00017750
29	Yes	73	0.00024325	0.00011716
30	Yes	72	0.00024721	0.00014672
31	Yes	72	0.00024540	0.00012551
32	Yes	44	0.00014257	0.00023522
33	Yes	40	0.00017502	0.00024072
34	Yes	41	0.00016459	0.00024301
35	Yes	88	0.00024738	0.00014674
36	Yes	87	0.00024272	0.00017082
37	Yes	86	0.00024122	0.00015667
38	Yes	41	0.00022812	0.00001664
39	Yes	36	0.00024634	0.00001953
40	Yes	30	0.00022275	0.00001855
41	Yes	33	0.00022312	0.00002026
42	Yes	37	0.00023060	0.00001831
43	Yes	33	0.00022570	0.00001855
44	Yes	23	0.00022371	0.00001877

45	Yes	35	0.00024361	0.00001979
46	Yes	40	0.00022728	0.00001865
47	Yes	37	0.00023117	0.00001755
48	Yes	28	0.00022453	0.00001721
49	Yes	37	0.00022889	0.00001584

Maximum Tower Deflections - Service Wind

Section No.	Elevation ft	Horz. Deflection in	Gov. Load Comb.	Tilt °	Twist °
T1	697 - 680	2.602	48	0.1420	2.1374
T2	680 - 660	2.848	48	0.1413	2.1414
T3	660 - 640	3.129	48	0.1315	2.1627
T4	640 - 620	3.360	48	0.1152	2.1778
T5	620 - 600	3.524	48	0.0974	2.1826
T6	600 - 580	3.629	44	0.0824	2.1754
T7	580 - 560	3.831	46	0.0726	2.1596
T8	560 - 540	4.071	46	0.0708	2.1373
T9	540 - 520	4.332	46	0.0709	2.1398
T10	520 - 500	4.565	46	0.0611	2.1449
T11	500 - 480	4.734	46	0.0452	2.1388
T12	480 - 460	4.812	46	0.0295	2.0998
T13	460 - 440	4.802	46	0.0303	2.0488
T14	440 - 420	4.730	46	0.0349	2.0082
T15	420 - 400	4.633	46	0.0311	1.9686
T16	400 - 380	4.570	46	0.0241	1.9474
T17	380 - 360	4.512	46	0.0239	1.9194
T18	360 - 340	4.480	39	0.0279	1.8727
T19	340 - 320	4.414	39	0.0372	1.7932
T20	320 - 300	4.298	39	0.0448	1.7182
T21	300 - 280	4.149	39	0.0474	1.6508
T22	280 - 260	3.997	39	0.0422	1.6002
T23	260 - 240	3.889	39	0.0338	1.5636
T24	240 - 220	3.791	39	0.0339	1.5206
T25	220 - 200	3.670	39	0.0383	1.4593
T26	200 - 180	3.513	39	0.0453	1.3457
T27	180 - 160	3.307	39	0.0539	1.2193
T28	160 - 140	3.054	39	0.0625	1.1138
T29	140 - 120	2.773	40	0.0679	1.0407
T30	120 - 100	2.489	40	0.0725	0.9755
T31	100 - 80	2.183	40	0.0806	0.8720
T32	80 - 60	1.830	40	0.0905	0.7210
T33	60 - 40	1.427	40	0.1009	0.5980
T34	40 - 20	0.980	40	0.1099	0.5151
T35	20 - 10	0.497	40	0.1161	0.4289
T36	10 - 0	0.249	40	0.1179	0.3905

Critical Deflections and Radius of Curvature - Service Wind

Elevation ft	Appurtenance	Gov. Load Comb.	Deflection in	Tilt °	Twist °	Radius of Curvature ft
700.50	24"x24"x12" Strobe Light	48	2.602	0.1420	2.1374	17878
697.00	UltraScan DR-II	48	2.602	0.1420	2.1374	17878
695.00	TFU-26JSC/VP-RCT150	48	2.631	0.1421	2.1374	17878

Elevation ft	Appurtenance	Gov. Load Comb.	Deflection in	Tilt °	Twist °	Radius of Curvature ft
689.70	TFU-26JSC/VP-RCT150	48	2.707	0.1422	2.1378	12245
684.40	TFU-26JSC/VP-RCT150	48	2.784	0.1420	2.1391	7096
684.29	Guy	48	2.786	0.1420	2.1391	7037
679.10	TFU-26JSC/VP-RCT150	48	2.861	0.1411	2.1420	5848
673.80	TFU-26JSC/VP-RCT150	48	2.938	0.1393	2.1468	7926
668.50	TFU-26JSC/VP-RCT150	48	3.013	0.1368	2.1528	13995
668.00	Elbow Complex	48	3.020	0.1365	2.1534	15085
663.20	TFU-26JSC/VP-RCT150	48	3.086	0.1336	2.1591	58290
657.90	TFU-26JSC/VP-RCT150	48	3.156	0.1300	2.1649	70455
652.60	TFU-26JSC/VP-RCT150	48	3.222	0.1259	2.1697	66008
647.30	TFU-26JSC/VP-RCT150	48	3.283	0.1216	2.1736	62439
642.00	TFU-26JSC/VP-RCT150	48	3.340	0.1170	2.1768	59322
625.00	JHPC-10	48	3.489	0.1016	2.1825	56835
620.00	JHPC-10	48	3.524	0.0974	2.1826	57084
615.00	JHPC-10	48	3.554	0.0933	2.1818	60173
610.00	JHPC-10	48	3.580	0.0893	2.1802	64459
605.00	JHPC-10	48	3.602	0.0856	2.1780	69402
600.00	JHPC-10	44	3.629	0.0824	2.1754	74842
595.00	JHPC-10	44	3.682	0.0793	2.1724	79714
590.00	JHPC-10	44	3.732	0.0766	2.1690	84848
585.00	JHPC-10	44	3.779	0.0743	2.1648	90688
580.00	JHPC-10	46	3.831	0.0726	2.1596	104930
575.00	JHPC-10	46	3.892	0.0714	2.1534	196724
570.00	JHPC-10	46	3.951	0.0708	2.1469	177231
565.00	JHPC-10	46	4.010	0.0705	2.1412	92750
560.00	JHPC-10	46	4.071	0.0708	2.1373	69919
555.00	JHPC-10	46	4.135	0.0713	2.1357	88118
554.96	Guy	46	4.136	0.0713	2.1357	88415
550.00	JHPC-10	46	4.201	0.0716	2.1362	147585
545.00	JHPC-10	46	4.267	0.0716	2.1378	326447
540.00	JHPC-10	46	4.332	0.0709	2.1398	140155
535.00	JHPC-10	46	4.395	0.0695	2.1416	109505
525.00	TFU-26JSC/VP-RCT150	46	4.512	0.0644	2.1441	82722
519.70	TFU-26JSC/VP-RCT150	46	4.568	0.0609	2.1450	73189
514.40	TFU-26JSC/VP-RCT150	46	4.620	0.0570	2.1454	65506
509.10	TFU-26JSC/VP-RCT150	46	4.667	0.0529	2.1448	59265
503.80	TFU-26JSC/VP-RCT150	46	4.708	0.0485	2.1422	54119
498.50	TFU-26JSC/VP-RCT150	46	4.743	0.0438	2.1371	51061
498.00	Elbow Complex	46	4.746	0.0434	2.1364	50956
493.20	TFU-26JSC/VP-RCT150	46	4.771	0.0391	2.1290	50567
487.90	TFU-26JSC/VP-RCT150	46	4.793	0.0347	2.1185	50286
482.60	TFU-26JSC/VP-RCT150	46	4.808	0.0311	2.1063	50106
477.30	TFU-26JSC/VP-RCT150	46	4.816	0.0280	2.0928	52834
472.00	TFU-26JSC/VP-RCT150	46	4.817	0.0284	2.0789	59439
414.96	Guy	46	4.614	0.0292	1.9619	79557
351.00	(2) 24"x24"x12" Strobe Light	39	4.457	0.0320	1.8390	87784
350.50	(2) 24"x24"x12" Strobe Light	39	4.455	0.0322	1.8370	87736
350.00	HP6-65	39	4.454	0.0325	1.8349	87689
274.96	Guy	39	3.966	0.0399	1.5904	67691
134.96	Guy	40	2.702	0.0690	1.0253	313942
100.00	HP6-65	40	2.183	0.0806	0.8720	98356

Maximum Tower Deflections - Design Wind

Section No.	Elevation ft	Horz. Deflection in	Gov. Load Comb.	Tilt °	Twist °
T1	697 - 680	88.937	5	1.8977	14.1252
T2	680 - 660	89.105	5	1.8962	14.2783
T3	660 - 640	90.817	7	1.8277	15.0550
T4	640 - 620	94.637	7	1.7162	15.5864
T5	620 - 600	97.514	16	1.5959	15.8861
T6	600 - 580	101.217	16	1.4944	15.9514
T7	580 - 560	103.941	16	1.4411	15.7348
T8	560 - 540	106.090	16	1.4678	15.1732
T9	540 - 520	108.940	16	1.4666	15.5526
T10	520 - 500	111.487	16	1.3017	16.1735
T11	500 - 480	113.061	16	1.0308	16.6683
T12	480 - 460	113.323	16	0.7394	16.6229
T13	460 - 440	112.272	16	0.6920	15.9467
T14	440 - 420	110.465	16	0.7123	15.4200
T15	420 - 400	108.461	16	0.5985	14.7503
T16	400 - 380	107.673	16	0.6188	14.9648
T17	380 - 360	107.351	16	0.6403	15.4270
T18	360 - 340	106.985	15	0.5439	15.5663
T19	340 - 320	106.401	15	0.5600	15.2425
T20	320 - 300	104.639	15	0.6485	14.6161
T21	300 - 280	102.029	15	0.6928	13.7282
T22	280 - 260	99.126	15	0.6353	12.8175
T23	260 - 240	97.237	15	0.5644	12.8297
T24	240 - 220	95.420	15	0.6123	12.9371
T25	220 - 200	92.906	15	0.7880	12.8089
T26	200 - 180	89.442	15	1.0194	12.2885
T27	180 - 160	84.659	15	1.2722	11.4049
T28	160 - 140	78.944	14	1.5102	10.3814
T29	140 - 120	72.539	14	1.6995	9.4265
T30	120 - 100	65.624	14	1.8658	8.9612
T31	100 - 80	57.796	14	2.0906	8.3287
T32	80 - 60	48.495	14	2.3649	6.8676
T33	60 - 40	37.717	14	2.6426	5.4613
T34	40 - 20	25.830	14	2.8705	4.3793
T35	20 - 10	13.009	14	3.0219	3.0894
T36	10 - 0	6.454	14	3.0620	2.5505

Critical Deflections and Radius of Curvature - Design Wind

Elevation ft	Appurtenance	Gov. Load Comb.	Deflection in	Tilt °	Twist °	Radius of Curvature ft
700.50	24"x24"x12" Strobe Light	5	88.937	1.8977	14.1252	17457
697.00	UltraScan DR-II	5	88.937	1.8977	14.1252	17457
695.00	TFU-26JSC/VP-RCT150	5	88.953	1.8989	14.1273	17457
689.70	TFU-26JSC/VP-RCT150	5	88.999	1.9012	14.1430	11957
684.40	TFU-26JSC/VP-RCT150	5	89.052	1.9005	14.1930	6929
684.29	Guy	5	89.053	1.9004	14.1945	6871
679.10	TFU-26JSC/VP-RCT150	5	89.117	1.8947	14.3020	5650
673.80	TFU-26JSC/VP-RCT150	5	89.192	1.8826	14.4797	7258
668.50	TFU-26JSC/VP-RCT150	5	89.257	1.8649	14.6989	8921
668.00	Elbow Complex	5	89.261	1.8629	14.7205	8400
663.20	TFU-26JSC/VP-RCT150	7	90.109	1.8427	14.9269	5397
657.90	TFU-26JSC/VP-RCT150	7	91.268	1.8172	15.1313	4340
652.60	TFU-26JSC/VP-RCT150	7	92.354	1.7893	15.2973	4200
647.30	TFU-26JSC/VP-RCT150	7	93.366	1.7595	15.4327	4103
642.00	TFU-26JSC/VP-RCT150	7	94.303	1.7282	15.5469	4012

Elevation ft	Appurtenance	Gov. Load Comb.	Deflection in	Tilt °	Twist °	Radius of Curvature ft
625.00	JHPC-10	7	96.798	1.6252	15.8318	3910
620.00	JHPC-10	16	97.514	1.5959	15.8861	3935
615.00	JHPC-10	16	98.543	1.5679	15.9231	4160
610.00	JHPC-10	16	99.500	1.5415	15.9446	4472
605.00	JHPC-10	16	100.390	1.5169	15.9531	4834
600.00	JHPC-10	16	101.217	1.4944	15.9514	5166
595.00	JHPC-10	16	101.987	1.4745	15.9396	5146
590.00	JHPC-10	16	102.698	1.4582	15.9078	5037
585.00	JHPC-10	16	103.350	1.4467	15.8437	4932
580.00	JHPC-10	16	103.941	1.4411	15.7348	5401
575.00	JHPC-10	16	104.476	1.4422	15.5777	11064
570.00	JHPC-10	16	104.987	1.4483	15.4044	5668
565.00	JHPC-10	16	105.513	1.4576	15.2560	3378
560.00	JHPC-10	16	106.090	1.4678	15.1732	2573
555.00	JHPC-10	16	106.746	1.4769	15.1851	3121
554.96	Guy	16	106.752	1.4770	15.1855	3127
550.00	JHPC-10	16	107.460	1.4818	15.2728	4087
545.00	JHPC-10	16	108.202	1.4794	15.4056	5919
540.00	JHPC-10	16	108.940	1.4666	15.5526	9177
535.00	JHPC-10	16	109.646	1.4409	15.6885	6907
525.00	TFU-26JSC/VP-RCT150	16	110.926	1.3566	16.0084	5166
519.70	TFU-26JSC/VP-RCT150	16	111.519	1.2982	16.1831	4563
514.40	TFU-26JSC/VP-RCT150	16	112.042	1.2331	16.3444	4103
509.10	TFU-26JSC/VP-RCT150	16	112.490	1.1625	16.4870	3730
503.80	TFU-26JSC/VP-RCT150	16	112.854	1.0871	16.6040	3419
498.50	TFU-26JSC/VP-RCT150	16	113.129	1.0081	16.6886	3207
498.00	Elbow Complex	16	113.150	1.0005	16.6947	3194
493.20	TFU-26JSC/VP-RCT150	16	113.308	0.9265	16.7338	3105
487.90	TFU-26JSC/VP-RCT150	16	113.389	0.8439	16.7315	3016
482.60	TFU-26JSC/VP-RCT150	16	113.370	0.7645	16.6739	2940
477.30	TFU-26JSC/VP-RCT150	16	113.249	0.7146	16.5536	3082
472.00	TFU-26JSC/VP-RCT150	16	113.032	0.6694	16.3782	3506
414.96	Guy	16	108.144	0.5549	14.7206	2910
351.00	(2) 24"x24"x12" Strobe Light	15	106.876	0.5071	15.4704	3883
350.50	(2) 24"x24"x12" Strobe Light	15	106.862	0.5095	15.4624	3878
350.00	HP6-65	15	106.848	0.5120	15.4541	3874
274.96	Guy	15	98.560	0.6125	12.7445	2897
134.96	Guy	14	70.842	1.7403	9.2713	13174
100.00	HP6-65	14	57.796	2.0906	8.3287	3088

Bolt Design Data

Section No.	Elevation ft	Component Type	Bolt Grade	Bolt Size in	Number Of Bolts	Maximum Load per Bolt lb	Allowable Load per Bolt lb	Ratio Load / Allowable	Allowable Ratio	Criteria
T1	697	Leg	A325X	1.0000	4	9904.35	54517.00	0.182 ✔	1	Bolt Tension
		Diagonal	A325X	0.8750	2	23476.30	33824.30	0.694 ✔	1	Bolt Shear
		Horizontal	A325X	0.8750	2	8416.17	40950.00	0.206 ✔	1	Member Bearing
		Top Girt	A325X	0.8750	2	4175.36	40950.00	0.102 ✔	1	Member Bearing
		Top Guy Pull-Off@684.29 2	A325X	1.0000	2	13942.10	43418.00	0.321 ✔	1	Member Block Shear
T2	680	Leg	A325X	1.0000	4	25940.70	54517.00	0.476 ✔	1	Bolt Tension

Section No.	Elevation ft	Component Type	Bolt Grade	Bolt Size in	Number Of Bolts	Maximum Load per Bolt lb	Allowable Load per Bolt lb	Ratio Load / Allowable	Allowable Ratio	Criteria
		Diagonal	A325X	0.8750	2	23635.20	33824.30	0.699 ✔	1	Bolt Shear
		Horizontal	A325X	0.8750	2	16821.20	40950.00	0.411 ✔	1	Member Bearing
		Top Girt	A325X	0.8750	2	18312.60	40950.00	0.447 ✔	1	Member Bearing
T3	660	Leg	A325X	1.0000	4	37717.60	54517.00	0.692 ✔	1	Bolt Tension
		Diagonal	A325X	0.8750	2	13622.80	33824.30	0.403 ✔	1	Bolt Shear
		Horizontal	A325X	0.8750	2	9237.04	40950.00	0.226 ✔	1	Member Bearing
		Top Girt	A325X	0.8750	2	11357.10	40950.00	0.277 ✔	1	Member Bearing
T4	640	Leg	A325X	1.0000	4	38208.50	54517.00	0.701 ✔	1	Bolt Tension
		Diagonal	A325X	0.8750	2	6087.63	33824.30	0.180 ✔	1	Bolt Shear
		Horizontal	A325X	0.8750	2	4673.20	40950.00	0.114 ✔	1	Member Bearing
		Top Girt	A325X	0.8750	2	5058.67	40950.00	0.124 ✔	1	Member Bearing
T5	620	Leg	A325X	1.0000	4	27661.30	54517.00	0.507 ✔	1	Bolt Tension
		Diagonal	A325X	0.8750	2	9392.70	33824.30	0.278 ✔	1	Bolt Shear
		Horizontal	A325X	0.8750	2	6670.68	40950.00	0.163 ✔	1	Member Bearing
		Top Girt	A325X	0.8750	2	5087.74	40950.00	0.124 ✔	1	Member Bearing
T6	600	Leg	A325X	1.0000	4	10772.30	54517.00	0.198 ✔	1	Bolt Tension
		Diagonal	A325X	0.8750	2	16634.00	33824.30	0.492 ✔	1	Bolt Shear
		Horizontal	A325X	0.8750	2	12010.50	40950.00	0.293 ✔	1	Member Bearing
		Top Girt	A325X	0.8750	2	7981.68	40950.00	0.195 ✔	1	Member Bearing
T7	580	Leg	A325X	1.0000	4	25505.70	54517.00	0.468 ✔	1	Bolt Tension
		Diagonal	A325X	0.8750	2	25939.80	33824.30	0.767 ✔	1	Bolt Shear
		Horizontal	A325X	0.8750	2	19053.80	40950.00	0.465 ✔	1	Member Bearing
		Top Girt	A325X	0.8750	2	13612.00	40950.00	0.332 ✔	1	Member Bearing
T8	560	Leg	A325X	1.0000	4	20310.90	54517.00	0.373 ✔	1	Bolt Tension
		Diagonal	A325X	0.8750	2	31763.40	33824.30	0.939 ✔	1	Bolt Shear
		Horizontal	A325X	0.8750	2	23742.50	40950.00	0.580 ✔	1	Member Bearing
		Top Girt	A325X	0.8750	2	20248.20	40950.00	0.494 ✔	1	Member Bearing
		Top Guy Pull-Off@554.958	A325X	1.0000	2	25540.00	43418.00	0.588 ✔	1	Member Block Shear
T9	540	Leg	A325X	1.0000	4	23579.50	54517.00	0.433 ✔	1	Bolt Tension
		Diagonal	A325X	0.8750	2	27417.70	33824.30	0.811 ✔	1	Bolt Shear
		Horizontal	A325X	0.8750	2	19610.20	40950.00	0.479 ✔	1	Member Bearing
		Top Girt	A325X	0.8750	2	21671.80	40950.00	0.529 ✔	1	Member Bearing
T10	520	Leg	A325X	1.0000	4	40222.60	54517.00	0.738 ✔	1	Bolt Tension
		Diagonal	A325X	0.8750	2	18407.60	33824.30	0.544 ✔	1	Bolt Shear
		Horizontal	A325X	0.8750	2	12715.70	40950.00	0.311 ✔	1	Member Bearing
		Top Girt	A325X	0.8750	2	15182.10	40950.00	0.371 ✔	1	Member Bearing
T11	500	Leg	A325X	1.0000	4	40109.00	54517.00	0.736 ✔	1	Bolt Tension
		Diagonal	A325X	0.8750	2	6615.64	33824.30	0.196 ✔	1	Bolt Shear
		Horizontal	A325X	0.8750	2	3164.74	20109.40	0.157 ✔	1	Member Block

Section No.	Elevation ft	Component Type	Bolt Grade	Bolt Size in	Number Of Bolts	Maximum Load per Bolt lb	Allowable Load per Bolt lb	Ratio Load / Allowable	Allowable Ratio	Criteria
		Top Girt	A325X	0.8750	2	3164.74	20109.40	0.157 ✔	1	Shear Member Block Shear
T12	480	Leg	A325X	1.0000	4	24563.70	54517.00	0.451 ✔	1	Bolt Tension
		Diagonal	A325X	0.8750	2	15742.30	33824.30	0.465 ✔	1	Bolt Shear
		Horizontal	A325X	0.8750	2	11503.60	40950.00	0.281 ✔	1	Member Bearing
		Top Girt	A325X	0.8750	2	3104.64	20109.40	0.154 ✔	1	Member Block Shear
T13	460	Leg	A325X	1.0000	4	26003.10	54517.00	0.477 ✔	1	Bolt Tension
		Diagonal	A325X	0.8750	2	23678.30	33824.30	0.700 ✔	1	Bolt Shear
		Horizontal	A325X	0.8750	2	17426.70	40950.00	0.426 ✔	1	Member Bearing
		Top Girt	A325X	0.8750	2	12890.70	40950.00	0.315 ✔	1	Member Bearing
T14	440	Leg	A325X	1.0000	4	33652.60	54517.00	0.617 ✔	1	Bolt Tension
		Diagonal	A325X	0.8750	2	31481.40	33824.30	0.931 ✔	1	Bolt Shear
		Horizontal	A325X	0.8750	2	23477.00	40950.00	0.573 ✔	1	Member Bearing
		Top Girt	A325X	0.8750	2	18972.00	40950.00	0.463 ✔	1	Member Bearing
T15	420	Leg	A325X	1.0000	4	25262.30	54517.00	0.463 ✔	1	Bolt Tension
		Diagonal	A325X	0.8750	2	31328.00	33824.30	0.926 ✔	1	Bolt Shear
		Horizontal	A325X	0.8750	2	18197.90	40950.00	0.444 ✔	1	Member Bearing
		Top Girt	A325X	0.8750	2	23886.10	40950.00	0.583 ✔	1	Member Bearing
		Top Guy Pull-Off@414.958	A325X	1.0000	2	24648.10	43418.00	0.568 ✔	1	Member Block Shear
T16	400	Leg	A325X	1.0000	4	25660.50	54517.00	0.471 ✔	1	Bolt Tension
		Diagonal	A325X	0.8750	2	20662.70	33824.30	0.611 ✔	1	Bolt Shear
		Horizontal	A325X	0.8750	2	14791.40	40950.00	0.361 ✔	1	Member Bearing
		Top Girt	A325X	0.8750	2	16570.60	40950.00	0.405 ✔	1	Member Bearing
T17	380	Leg	A325X	1.0000	4	29634.60	54517.00	0.544 ✔	1	Bolt Tension
		Diagonal	A325X	0.8750	2	13530.40	33824.30	0.400 ✔	1	Bolt Shear
		Horizontal	A325X	0.8750	2	9580.75	40950.00	0.234 ✔	1	Member Bearing
		Top Girt	A325X	0.8750	2	11156.10	40950.00	0.272 ✔	1	Member Bearing
T18	360	Leg	A325X	1.0000	4	30108.30	54517.00	0.552 ✔	1	Bolt Tension
		Diagonal	A325X	0.8750	2	8617.17	33824.30	0.255 ✔	1	Bolt Shear
		Horizontal	A325X	0.8750	2	3208.45	20109.40	0.160 ✔	1	Member Block Shear
		Top Girt	A325X	0.8750	2	7058.21	40950.00	0.172 ✔	1	Member Bearing
T19	340	Leg	A325X	1.0000	4	27140.10	54517.00	0.498 ✔	1	Bolt Tension
		Diagonal	A325X	0.8750	2	13655.40	33824.30	0.404 ✔	1	Bolt Shear
		Horizontal	A325X	0.8750	2	9906.04	40950.00	0.242 ✔	1	Member Bearing
		Top Girt	A325X	0.8750	2	3150.09	20109.40	0.157 ✔	1	Member Block Shear
T20	320	Leg	A325X	1.0000	4	25392.50	54517.00	0.466 ✔	1	Bolt Tension
		Diagonal	A325X	0.8750	2	20728.30	33824.30	0.613 ✔	1	Bolt Shear
		Horizontal	A325X	0.8750	2	15306.30	40950.00	0.374 ✔	1	Member Bearing

Section No.	Elevation ft	Component Type	Bolt Grade	Bolt Size in	Number Of Bolts	Maximum Load per Bolt lb	Allowable Load per Bolt lb	Ratio Load / Allowable	Allowable Ratio	Criteria
		Top Girt	A325X	0.8750	2	11232.70	40950.00	0.274 ✔	1	Member Bearing
T21	300	Leg	A325X	1.0000	4	32249.50	54517.00	0.592 ✔	1	Bolt Tension
		Diagonal	A325X	0.8750	2	27837.00	33824.30	0.823 ✔	1	Bolt Shear
		Horizontal	A325X	0.8750	2	20729.80	40950.00	0.506 ✔	1	Member Bearing
		Top Girt	A325X	0.8750	2	16641.60	40950.00	0.406 ✔	1	Member Bearing
T22	280	Leg	A325X	1.0000	4	28952.10	54517.00	0.531 ✔	1	Bolt Tension
		Diagonal	A325X	0.8750	2	27538.60	33824.30	0.814 ✔	1	Bolt Shear
		Horizontal	A325X	0.8750	2	18593.70	40950.00	0.454 ✔	1	Member Bearing
		Top Girt	A325X	0.8750	2	21085.30	40950.00	0.515 ✔	1	Member Bearing
		Top Guy Pull-Off@274.958	A325X	1.0000	2	25102.80	43418.00	0.578 ✔	1	Member Block Shear
T23	260	Leg	A325X	1.2500	4	38025.50	87219.80	0.436 ✔	1	Bolt Tension
		Diagonal	A325X	0.8750	2	21775.70	33824.30	0.644 ✔	1	Bolt Shear
		Horizontal	A325X	0.8750	2	15638.70	40950.00	0.382 ✔	1	Member Bearing
		Top Girt	A325X	0.8750	2	17398.00	40950.00	0.425 ✔	1	Member Bearing
T24	240	Leg	A325X	1.2500	4	46168.70	87219.80	0.529 ✔	1	Bolt Tension
		Diagonal	A325X	0.8750	2	14845.50	33824.30	0.439 ✔	1	Bolt Shear
		Horizontal	A325X	0.8750	2	10624.10	40950.00	0.259 ✔	1	Member Bearing
		Top Girt	A325X	0.8750	2	12212.80	40950.00	0.298 ✔	1	Member Bearing
T25	220	Leg	A325X	1.2500	4	59599.00	87219.80	0.683 ✔	1	Bolt Tension
		Diagonal	A325X	0.8750	2	10678.20	33824.30	0.316 ✔	1	Bolt Shear
		Horizontal	A325X	0.8750	2	5270.76	20109.40	0.262 ✔	1	Member Block Shear
		Top Girt	A325X	0.8750	2	5270.76	20109.40	0.262 ✔	1	Member Block Shear
T26	200	Leg	A325X	1.2500	4	60365.60	87219.80	0.692 ✔	1	Bolt Tension
		Diagonal	A325X	0.8750	2	9521.42	33824.30	0.281 ✔	1	Bolt Shear
		Horizontal	A325X	0.8750	2	5364.87	20109.40	0.267 ✔	1	Member Block Shear
		Top Girt	A325X	0.8750	2	5364.87	20109.40	0.267 ✔	1	Member Block Shear
T27	180	Leg	A325X	1.2500	4	47201.30	87219.80	0.541 ✔	1	Bolt Tension
		Diagonal	A325X	0.8750	2	15912.70	33824.30	0.470 ✔	1	Bolt Shear
		Horizontal	A325X	0.8750	2	11886.50	40950.00	0.290 ✔	1	Member Bearing
		Top Girt	A325X	0.8750	2	5284.52	20109.40	0.263 ✔	1	Member Block Shear
T28	160	Leg	A325X	1.2500	4	38130.40	87219.80	0.437 ✔	1	Bolt Tension
		Diagonal	A325X	0.8750	2	23113.40	33824.30	0.683 ✔	1	Bolt Shear
		Horizontal	A325X	0.8750	2	17266.10	40950.00	0.422 ✔	1	Member Bearing
		Top Girt	A325X	0.8750	2	13081.80	40950.00	0.319 ✔	1	Member Bearing
T29	140	Leg	A325X	1.2500	4	44768.90	87219.80	0.513 ✔	1	Bolt Tension
		Diagonal	A325X	0.8750	2	22953.10	33824.30	0.679 ✔	1	Bolt Shear
		Horizontal	A325X	0.8750	2	12200.40	40950.00	0.298 ✔	1	Member Bearing

Section No.	Elevation ft	Component Type	Bolt Grade	Bolt Size in	Number Of Bolts	Maximum Load per Bolt lb	Allowable Load per Bolt lb	Ratio Load / Allowable	Allowable Ratio	Criteria
		Top Girt	A325X	0.8750	2	17366.40	40950.00	0.424 ✔	1	Member Bearing
		Top Guy Pull-Off@134.958	A325X	1.0000	2	19247.30	43418.00	0.443 ✔	1	Member Block Shear
T30	120	Leg	A325X	1.2500	4	49695.90	87219.80	0.570 ✔	1	Bolt Tension
		Diagonal	A325X	0.8750	2	14480.00	33824.30	0.428 ✔	1	Bolt Shear
		Horizontal	A325X	0.8750	2	10866.40	40950.00	0.265 ✔	1	Member Bearing
		Top Girt	A325X	0.8750	2	11476.00	40950.00	0.280 ✔	1	Member Bearing
T31	100	Leg	A325X	1.2500	4	50259.20	87219.80	0.576 ✔	1	Bolt Tension
		Diagonal	A325X	0.8750	2	12968.40	33824.30	0.383 ✔	1	Bolt Shear
		Horizontal	A325X	0.8750	2	5356.96	20109.40	0.266 ✔	1	Member Block Shear
		Top Girt	A325X	0.8750	2	5356.96	20109.40	0.266 ✔	1	Member Block Shear
T32	80	Leg	A325X	1.2500	4	47619.50	87219.80	0.546 ✔	1	Bolt Tension
		Diagonal	A325X	0.8750	2	16116.20	33824.30	0.476 ✔	1	Bolt Shear
		Horizontal	A325X	0.8750	2	12185.40	40950.00	0.298 ✔	1	Member Bearing
		Top Girt	A325X	0.8750	2	5320.04	20109.40	0.265 ✔	1	Member Block Shear
T33	60	Leg	A325X	1.2500	4	42274.30	87219.80	0.485 ✔	1	Bolt Tension
		Diagonal	A325X	0.8750	2	21798.00	33824.30	0.644 ✔	1	Bolt Shear
		Horizontal	A325X	0.8750	2	16260.40	40950.00	0.397 ✔	1	Member Bearing
		Top Girt	A325X	0.8750	2	13085.00	40950.00	0.320 ✔	1	Member Bearing
T34	40	Leg	A325X	1.2500	4	33983.30	87219.80	0.390 ✔	1	Bolt Tension
		Diagonal	A325X	0.8750	2	26066.80	33824.30	0.771 ✔	1	Bolt Shear
		Horizontal	A325X	0.8750	2	19741.10	40950.00	0.482 ✔	1	Member Bearing
		Top Girt	A325X	0.8750	2	17217.20	40950.00	0.420 ✔	1	Member Bearing
T35	20	Leg	A325X	1.2500	4	29259.60	87219.80	0.335 ✔	1	Bolt Tension
		Diagonal	A325X	1.0000	2	33025.90	44178.60	0.748 ✔	1	Bolt Shear
		Horizontal	A325X	0.8750	2	22103.60	40950.00	0.540 ✔	1	Member Bearing
		Top Girt	A325X	0.8750	2	20405.10	40950.00	0.498 ✔	1	Member Bearing
T36	10	Leg	A325X	1.2500	4	31123.20	87219.80	0.357 ✔	1	Bolt Tension
		Diagonal	A325X	0.8750	2	18466.10	30011.70	0.615 ✔	1	Member Block Shear
		Horizontal	A325X	0.8750	2	3372.77	31382.80	0.107 ✔	1	Member Block Shear
		Top Girt	A325X	1.1250	2	31236.50	45322.30	0.689 ✔	1	Member Block Shear

Guy Design Data

Section No.	Elevation ft	Size	Initial Tension lb	Breaking Load lb	Actual T_u lb	Allowable ϕT_n lb	Required S.F.	Actual S.F.
T1	684.29 (A) (1365)	1 3/8" UHS UHS	26600.00	265999.75	138024.00	159600.00	1.000	1.156 ✔
	684.29 (B) (1364)	1 3/8" UHS UHS	26600.00	265999.75	144855.00	159600.00	1.000	1.102 ✔
	684.29 (C) (1363)	1 3/8" UHS UHS	26600.00	265999.75	134047.00	159600.00	1.000	1.191 ✔
T8	554.96 (A) (1368)	1 5/8" UHS UHS	33480.00	371999.59	198750.00	223200.00	1.000	1.123 ✔
	554.96 (B) (1367)	1 5/8" UHS UHS	33480.00	371999.59	206060.00	223200.00	1.000	1.083 ✔
	554.96 (C) (1366)	1 5/8" UHS UHS	33480.00	371999.59	193832.00	223200.00	1.000	1.152 ✔
T15	414.96 (A) (1371)	1 1/2" UHS UHS	28440.00	315999.91	167117.00	189600.00	1.000	1.135 ✔
	414.96 (B) (1370)	1 1/2" UHS UHS	28440.00	315999.91	168005.00	189600.00	1.000	1.129 ✔
	414.96 (C) (1369)	1 1/2" UHS UHS	28440.00	315999.91	165389.00	189600.00	1.000	1.146 ✔
T22	274.96 (A) (1374)	1 3/8" UHS UHS	26600.00	265999.75	145469.00	159600.00	1.000	1.097 ✔
	274.96 (B) (1373)	1 3/8" UHS UHS	26600.00	265999.75	142389.00	159600.00	1.000	1.121 ✔
	274.96 (C) (1372)	1 3/8" UHS UHS	26600.00	265999.75	146893.00	159600.00	1.000	1.087 ✔
T29	134.96 (A) (1377)	1 1/8" UHS UHS	21528.00	179400.28	94648.80	107640.00	1.000	1.137 ✔
	134.96 (B) (1376)	1 1/8" UHS UHS	21528.00	179400.28	94710.40	107640.00	1.000	1.137 ✔
	134.96 (C) (1375)	1 1/8" UHS UHS	21528.00	179400.28	91763.80	107640.00	1.000	1.173 ✔

Compression Checks

Leg Design Data (Compression)

Section No.	Elevation ft	Size	L ft	L_u ft	Kl/r	A in^2	P_u lb	ϕP_n lb	Ratio $\frac{P_u}{\phi P_n}$
T1	697 - 680	3 1/2	17.00	4.21	57.7 K=1.00	9.6211	-125747.00	339365.00	0.371
T2	680 - 660	3 1/2	20.00	4.96	68.0 K=1.00	9.6211	-207481.00	308749.00	0.672 [1]
T3	660 - 640	3 1/2	20.00	4.96	68.0 K=1.00	9.6211	-243410.00	308749.00	0.788 [1]
T4	640 - 620	3 1/2	20.00	4.96	68.0 K=1.00	9.6211	-247613.00	308749.00	0.802 [1]
T5	620 - 600	3 1/2	20.00	4.96	68.0 K=1.00	9.6211	-239891.00	308749.00	0.777 [1]
T6	600 - 580	3 1/2	20.00	4.96	68.0 K=1.00	9.6211	-193808.00	308749.00	0.628 [1]
T7	580 - 560	3 1/2	20.00	4.96	68.0 K=1.00	9.6211	-242329.00	308749.00	0.785 [1]
T8	560 - 540	3 1/2	20.00	4.96	68.0	9.6211	-297496.00	308749.00	0.964 [1]

Section No.	Elevation ft	Size	L ft	L_u ft	Kl/r	A in^2	P_u lb	ϕP_n lb	Ratio $\frac{P_u}{\phi P_n}$
T9	540 - 520	3 3/4	20.00	4.96	K=1.00 63.5	11.0447	-284083.00	370218.00	0.767 [1]
T10	520 - 500	3 3/4	20.00	4.96	K=1.00 63.5	11.0447	-354796.00	370218.00	0.958 [1]
T11	500 - 480	3 3/4	20.00	4.96	K=1.00 63.5	11.0447	-365432.00	370218.00	0.987 [1]
T12	480 - 460	3 3/4	20.00	4.96	K=1.00 63.5	11.0447	-358493.00	370218.00	0.968 [1]
T13	460 - 440	3 3/4	20.00	4.96	K=1.00 63.5	11.0447	-313721.00	370218.00	0.847 [1]
T14	440 - 420	4	20.00	4.96	K=1.00 59.5	12.5664	-406047.00	436520.00	0.930 [1]
T15	420 - 400	4	20.00	4.96	K=1.00 59.5	12.5664	-432213.00	436520.00	0.990 [1]
T16	400 - 380	4	20.00	4.96	K=1.00 59.5	12.5664	-307926.00	436520.00	0.705 [1]
T17	380 - 360	4	20.00	4.96	K=1.00 59.5	12.5664	-355616.00	436520.00	0.815 [1]
T18	360 - 340	4	20.00	4.96	K=1.00 59.5	12.5664	-370480.00	436520.00	0.849 [1]
T19	340 - 320	4	20.00	4.96	K=1.00 59.5	12.5664	-363741.00	436520.00	0.833 [1]
T20	320 - 300	4	20.00	4.96	K=1.00 59.5	12.5664	-326173.00	436520.00	0.747 [1]
T21	300 - 280	4	20.00	4.96	K=1.00 59.5	12.5664	-386994.00	436520.00	0.887 [1]
T22	280 - 260	4	20.00	4.96	K=1.00 59.5	12.5664	-429096.00	436520.00	0.983 [1]
T23	260 - 240	4 3/4	20.00	4.96	K=1.00 50.1	17.7205	-456306.00	663696.00	0.688 [1]
T24	240 - 220	4 3/4	20.00	4.96	K=1.00 50.1	17.7205	-554024.00	663696.00	0.835 [1]
T25	220 - 200	4 3/4	20.00	4.96	K=1.00 50.1	17.7205	-608615.00	663696.00	0.917 [1]
T26	200 - 180	4 3/4	20.00	4.96	K=1.00 50.1	17.7205	-619482.00	663696.00	0.933 [1]
T27	180 - 160	4 3/4	20.00	4.96	K=1.00 50.1	17.7205	-610204.00	663696.00	0.919 [1]
T28	160 - 140	4 3/4	20.00	4.96	K=1.00 50.1	17.7205	-557049.00	663696.00	0.839 [1]
T29	140 - 120	4 3/4	20.00	4.96	K=1.00 50.1	17.7205	-537227.00	663696.00	0.809 [1]
T30	120 - 100	4 3/4	20.00	4.96	K=1.00 50.1	17.7205	-601511.00	663696.00	0.906 [1]
T31	100 - 80	4 3/4	20.00	4.96	K=1.00 50.1	17.7205	-618568.00	663696.00	0.932 [1]
T32	80 - 60	4 3/4	20.00	4.96	K=1.00 50.1	17.7205	-614306.00	663696.00	0.926 [1]
T33	60 - 40	4 3/4	20.00	4.96	K=1.00 50.1	17.7205	-574545.00	663696.00	0.866 [1]
T34	40 - 20	4 3/4	20.00	4.96	K=1.00 50.1	17.7205	-507855.00	663696.00	0.765 [1]
T35	20 - 10	4 3/4	10.00	4.92	K=1.00 49.7	17.7205	-389532.00	665738.00	0.585
T36	10 - 0	6	10.58	5.29	K=1.00 42.3	28.2743	-361438.00	1116090.00	0.324
					K=1.00				

[1] $P_u / \phi P_n$ controls

Leg Bending Design Data (Compression)

Section No.	Elevation ft	Size	M_{ux} lb-ft	ϕM_{nx} lb-ft	Ratio $\frac{M_{ux}}{\phi M_{nx}}$	M_{uy} lb-ft	ϕM_{ny} lb-ft	Ratio $\frac{M_{uy}}{\phi M_{ny}}$
T1	697 - 680	3 1/2	2701.46	26796.92	0.101	0.00	26796.92	0.000
T2	680 - 660	3 1/2	935.93	26796.92	0.035	0.00	26796.92	0.000
T3	660 - 640	3 1/2	770.47	26796.92	0.029	0.00	26796.92	0.000
T4	640 - 620	3 1/2	335.09	26796.92	0.013	0.00	26796.92	0.000
T5	620 - 600	3 1/2	479.30	26796.92	0.018	0.00	26796.92	0.000
T6	600 - 580	3 1/2	543.82	26796.92	0.020	0.00	26796.92	0.000
T7	580 - 560	3 1/2	834.18	26796.92	0.031	0.00	26796.92	0.000
T8	560 - 540	3 1/2	476.65	26796.92	0.018	0.00	26796.92	0.000
T9	540 - 520	3 3/4	888.63	32959.00	0.027	0.00	32959.00	0.000
T10	520 - 500	3 3/4	885.93	32959.00	0.027	0.00	32959.00	0.000
T11	500 - 480	3 3/4	453.51	32959.00	0.014	0.00	32959.00	0.000
T12	480 - 460	3 3/4	680.98	32959.00	0.021	0.00	32959.00	0.000
T13	460 - 440	3 3/4	696.07	32959.00	0.021	0.00	32959.00	0.000
T14	440 - 420	4	786.84	40000.00	0.020	0.00	40000.00	0.000
T15	420 - 400	4	3141.94	40000.00	0.079	0.00	40000.00	0.000
T16	400 - 380	4	332.67	40000.00	0.008	0.00	40000.00	0.000
T17	380 - 360	4	485.11	40000.00	0.012	0.00	40000.00	0.000
T18	360 - 340	4	424.43	40000.00	0.011	0.00	40000.00	0.000
T19	340 - 320	4	628.25	40000.00	0.016	0.00	40000.00	0.000
T20	320 - 300	4	634.44	40000.00	0.016	0.00	40000.00	0.000
T21	300 - 280	4	490.09	40000.00	0.012	0.00	40000.00	0.000
T22	280 - 260	4	582.18	40000.00	0.015	0.00	40000.00	0.000
T23	260 - 240	4 3/4	507.77	66982.42	0.008	0.00	66982.42	0.000
T24	240 - 220	4 3/4	475.03	66982.42	0.007	0.00	66982.42	0.000
T25	220 - 200	4 3/4	1802.86	66982.42	0.027	0.00	66982.42	0.000
T26	200 - 180	4 3/4	1261.67	66982.42	0.019	0.00	66982.42	0.000
T27	180 - 160	4 3/4	1610.76	66982.42	0.024	0.00	66982.42	0.000
T28	160 - 140	4 3/4	1461.20	66982.42	0.022	0.00	66982.42	0.000
T29	140 - 120	4 3/4	519.57	66982.42	0.008	0.00	66982.42	0.000
T30	120 - 100	4 3/4	2136.92	66982.42	0.032	0.00	66982.42	0.000
T31	100 - 80	4 3/4	1042.94	66982.42	0.016	0.00	66982.42	0.000
T32	80 - 60	4 3/4	1525.56	66982.42	0.023	0.00	66982.42	0.000
T33	60 - 40	4 3/4	1400.08	66982.42	0.021	0.00	66982.42	0.000
T34	40 - 20	4 3/4	1084.67	66982.42	0.016	0.00	66982.42	0.000
T35	20 - 10	4 3/4	22290.42	66982.42	0.333	0.00	66982.42	0.000
T36	10 - 0	6	102970.83	135000.00	0.763	0.00	135000.00	0.000

Leg Interaction Design Data (Compression)

Section No.	Elevation ft	Size	Ratio $\frac{P_u}{\phi P_n}$	Ratio $\frac{M_{ux}}{\phi M_{nx}}$	Ratio $\frac{M_{uy}}{\phi M_{ny}}$	Comb. Stress Ratio	Allow. Stress Ratio	Criteria
T1	697 - 680	3 1/2	0.371	0.101	0.000	0.419 ✔	1.000	4.8.1 ✔
T2	680 - 660	3 1/2	0.672	0.035	0.000	0.672 [1] ✔	1.000	4.8.1 ✔
T3	660 - 640	3 1/2	0.788	0.029	0.000	0.788 [1] ✔	1.000	4.8.1 ✔
T4	640 - 620	3 1/2	0.802	0.013	0.000	0.802 [1] ✔	1.000	4.8.1 ✔

Section No.	Elevation ft	Size	Ratio $P_u/\phi P_n$	Ratio $M_{ux}/\phi M_{nx}$	Ratio $M_{uy}/\phi M_{ny}$	Comb. Stress Ratio	Allow. Stress Ratio	Criteria
T5	620 - 600	3 1/2	0.777	0.018	0.000	0.777 [1] ✔	1.000	4.8.1 ✔
T6	600 - 580	3 1/2	0.628	0.020	0.000	0.628 [1] ✔	1.000	4.8.1 ✔
T7	580 - 560	3 1/2	0.785	0.031	0.000	0.785 [1] ✔	1.000	4.8.1 ✔
T8	560 - 540	3 1/2	0.964	0.018	0.000	0.964 [1] ✔	1.000	4.8.1 ✔
T9	540 - 520	3 3/4	0.767	0.027	0.000	0.767 [1] ✔	1.000	4.8.1 ✔
T10	520 - 500	3 3/4	0.958	0.027	0.000	0.958 [1] ✔	1.000	4.8.1 ✔
T11	500 - 480	3 3/4	0.987	0.014	0.000	0.987 [1] ✔	1.000	4.8.1 ✔
T12	480 - 460	3 3/4	0.968	0.021	0.000	0.968 [1] ✔	1.000	4.8.1 ✔
T13	460 - 440	3 3/4	0.847	0.021	0.000	0.847 [1] ✔	1.000	4.8.1 ✔
T14	440 - 420	4	0.930	0.020	0.000	0.930 [1] ✔	1.000	4.8.1 ✔
T15	420 - 400	4	0.990	0.079	0.000	0.990 [1] ✔	1.000	4.8.1 ✔
T16	400 - 380	4	0.705	0.008	0.000	0.705 [1] ✔	1.000	4.8.1 ✔
T17	380 - 360	4	0.815	0.012	0.000	0.815 [1] ✔	1.000	4.8.1 ✔
T18	360 - 340	4	0.849	0.011	0.000	0.849 [1] ✔	1.000	4.8.1 ✔
T19	340 - 320	4	0.833	0.016	0.000	0.833 [1] ✔	1.000	4.8.1 ✔
T20	320 - 300	4	0.747	0.016	0.000	0.747 [1] ✔	1.000	4.8.1 ✔
T21	300 - 280	4	0.887	0.012	0.000	0.887 [1] ✔	1.000	4.8.1 ✔
T22	280 - 260	4	0.983	0.015	0.000	0.983 [1] ✔	1.000	4.8.1 ✔
T23	260 - 240	4 3/4	0.688	0.008	0.000	0.688 [1] ✔	1.000	4.8.1 ✔
T24	240 - 220	4 3/4	0.835	0.007	0.000	0.835 [1] ✔	1.000	4.8.1 ✔
T25	220 - 200	4 3/4	0.917	0.027	0.000	0.917 [1] ✔	1.000	4.8.1 ✔
T26	200 - 180	4 3/4	0.933	0.019	0.000	0.933 [1] ✔	1.000	4.8.1 ✔
T27	180 - 160	4 3/4	0.919	0.024	0.000	0.919 [1] ✔	1.000	4.8.1 ✔
T28	160 - 140	4 3/4	0.839	0.022	0.000	0.839 [1] ✔	1.000	4.8.1 ✔
T29	140 - 120	4 3/4	0.809	0.008	0.000	0.809 [1] ✔	1.000	4.8.1 ✔
T30	120 - 100	4 3/4	0.906	0.032	0.000	0.906 [1] ✔	1.000	4.8.1 ✔

Section No.	Elevation ft	Size	Ratio $\frac{P_u}{\phi P_n}$	Ratio $\frac{M_{ux}}{\phi M_{nx}}$	Ratio $\frac{M_{uy}}{\phi M_{ny}}$	Comb. Stress Ratio	Allow. Stress Ratio	Criteria
T31	100 - 80	4 3/4	0.932	0.016	0.000	0.932 [1] ✔	1.000	4.8.1 ✔
T32	80 - 60	4 3/4	0.926	0.023	0.000	0.926 [1] ✔	1.000	4.8.1 ✔
T33	60 - 40	4 3/4	0.866	0.021	0.000	0.866 [1] ✔	1.000	4.8.1 ✔
T34	40 - 20	4 3/4	0.765	0.016	0.000	0.765 [1] ✔	1.000	4.8.1 ✔
T35	20 - 10	4 3/4	0.585	0.333	0.000	0.816 ✔	1.000	4.8.1 ✔
T36	10 - 0	6	0.324	0.763	0.000	0.966 ✔	1.000	4.8.1 ✔

[1] P_u / ϕP_n controls

Diagonal Design Data (Compression)

Section No.	Elevation ft	Size	L ft	L_u ft	Kl/r	A in^2	P_u lb	ϕP_n lb	Ratio $\frac{P_u}{\phi P_n}$
T36	10 - 0	2L3 1/2x3 1/2x1/4	5.21	3.93	43.3 K=1.00	3.3800	-37731.30	128356.00	0.294 [1] ✔

[1] P_u / ϕP_n controls

Horizontal Design Data (Compression)

Section No.	Elevation ft	Size	L ft	L_u ft	Kl/r	A in^2	P_u lb	ϕP_n lb	Ratio $\frac{P_u}{\phi P_n}$
T1	697 - 680	2L2 1/2x2 1/2x3/16	6.00	5.16	79.5 K=1.00	1.8000	-16832.30	65091.20	0.259 [1] ✔
T2	680 - 660	2L2 1/2x2 1/2x3/16	6.00	5.16	79.5 K=1.00	1.8000	-33642.40	65091.20	0.517 [1] ✔
T3	660 - 640	2L2 1/2x2 1/2x3/16	6.00	5.16	79.5 K=1.00	1.8000	-18474.10	65091.20	0.284 [1] ✔
T4	640 - 620	2L2 1/2x2 1/2x3/16	6.00	5.16	79.5 K=1.00	1.8000	-9346.40	65091.20	0.144 [1] ✔
T5	620 - 600	2L2 1/2x2 1/2x3/16	6.00	5.16	79.5 K=1.00	1.8000	-13341.40	65091.20	0.205 [1] ✔
T6	600 - 580	2L2 1/2x2 1/2x3/16	6.00	5.16	79.5 K=1.00	1.8000	-24021.10	65091.20	0.369 [1] ✔
T7	580 - 560	2L2 1/2x2 1/2x3/16	6.00	5.16	79.5 K=1.00	1.8000	-38107.50	65091.20	0.585 [1] ✔
T8	560 - 540	2L2 1/2x2 1/2x3/16	6.00	5.16	79.5 K=1.00	1.8000	-47485.00	65091.20	0.730 [1] ✔
T9	540 - 520	2L2 1/2x2 1/2x3/16	6.00	5.14	79.2	1.8000	-39220.30	65291.30	0.601 [1]

Section No.	Elevation ft	Size	L ft	L_u ft	Kl/r	A in^2	P_u lb	ϕP_n lb	Ratio $\frac{P_u}{\phi P_n}$
					K=1.00				✔
T10	520 - 500	2L2 1/2x2 1/2x3/16	6.00	5.14	79.2	1.8000	-25431.40	65291.30	0.390 [1]
					K=1.00				✔
T11	500 - 480	2L2 1/2x2 1/2x3/16	6.00	5.14	79.2	1.8000	-8646.38	65291.30	0.132 [1]
					K=1.00				✔
T12	480 - 460	2L2 1/2x2 1/2x3/16	6.00	5.14	79.2	1.8000	-23007.20	65291.30	0.352 [1]
					K=1.00				✔
T13	460 - 440	2L2 1/2x2 1/2x3/16	6.00	5.14	79.2	1.8000	-34853.40	65291.30	0.534 [1]
					K=1.00				✔
T14	440 - 420	2L2 1/2x2 1/2x3/16	6.00	5.11	78.9	1.8000	-46954.00	65490.50	0.717 [1]
					K=1.00				✔
T15	420 - 400	2L2 1/2x2 1/2x3/16	6.00	5.11	78.9	1.8000	-36395.80	65490.50	0.556 [1]
					K=1.00				✔
T16	400 - 380	2L2 1/2x2 1/2x3/16	6.00	5.11	78.9	1.8000	-29582.80	65490.50	0.452 [1]
					K=1.00				✔
T17	380 - 360	2L2 1/2x2 1/2x3/16	6.00	5.11	78.9	1.8000	-19161.50	65490.50	0.293 [1]
					K=1.00				✔
T18	360 - 340	2L2 1/2x2 1/2x3/16	6.00	5.11	78.9	1.8000	-12599.80	65490.50	0.192 [1]
					K=1.00				✔
T19	340 - 320	2L2 1/2x2 1/2x3/16	6.00	5.11	78.9	1.8000	-19812.10	65490.50	0.303 [1]
					K=1.00				✔
T20	320 - 300	2L2 1/2x2 1/2x3/16	6.00	5.11	78.9	1.8000	-30612.50	65490.50	0.467 [1]
					K=1.00				✔
T21	300 - 280	2L2 1/2x2 1/2x3/16	6.00	5.11	78.9	1.8000	-41459.60	65490.50	0.633 [1]
					K=1.00				✔
T22	280 - 260	2L2 1/2x2 1/2x3/16	6.00	5.11	78.9	1.8000	-37187.40	65490.50	0.568 [1]
					K=1.00				✔
T23	260 - 240	2L2 1/2x2 1/2x3/16	6.00	5.05	77.9	1.8000	-31277.50	66083.30	0.473 [1]
					K=1.00				✔
T24	240 - 220	2L2 1/2x2 1/2x3/16	6.00	5.05	77.9	1.8000	-21248.30	66083.30	0.322 [1]
					K=1.00				✔
T25	220 - 200	2L2 1/2x2 1/2x3/16	6.00	5.05	77.9	1.8000	-16037.60	66083.30	0.243 [1]
					K=1.00				✔
T26	200 - 180	2L2 1/2x2 1/2x3/16	6.00	5.05	77.9	1.8000	-13208.50	66083.30	0.200 [1]
					K=1.00				✔
T27	180 - 160	2L2 1/2x2 1/2x3/16	6.00	5.05	77.9	1.8000	-23773.10	66083.30	0.360 [1]
					K=1.00				✔
T28	160 - 140	2L2 1/2x2 1/2x3/16	6.00	5.05	77.9	1.8000	-34532.30	66083.30	0.523 [1]
					K=1.00				✔
T29	140 - 120	2L2 1/2x2 1/2x3/16	6.00	5.05	77.9	1.8000	-24400.80	66083.30	0.369 [1]
					K=1.00				✔
T30	120 - 100	2L2 1/2x2 1/2x3/16	6.00	5.05	77.9	1.8000	-21732.90	66083.30	0.329 [1]
					K=1.00				✔
T31	100 - 80	2L2 1/2x2 1/2x3/16	6.00	5.05	77.9	1.8000	-19512.50	66083.30	0.295 [1]
					K=1.00				✔
T32	80 - 60	2L2 1/2x2 1/2x3/16	6.00	5.05	77.9	1.8000	-24370.90	66083.30	0.369 [1]
					K=1.00				✔
T33	60 - 40	2L2 1/2x2 1/2x3/16	6.00	5.05	77.9	1.8000	-32520.90	66083.30	0.492 [1]
					K=1.00				✔
T34	40 - 20	2L2 1/2x2 1/2x3/16	6.00	5.05	77.9	1.8000	-39482.10	66083.30	0.597 [1]
					K=1.00				✔
T35	20 - 10	2L2 1/2x2 1/2x3/16	6.00	5.05	77.9	1.8000	-44207.10	66083.30	0.669 [1]

Section No.	Elevation ft	Size	L ft	L_u ft	Kl/r	A in^2	P_u lb	ϕP_n lb	Ratio $\frac{P_u}{\phi P_n}$
T36	10 - 0	2L3 1/2x3 1/2x1/4	3.00	1.60	K=1.00 16.0 K=1.00	3.3800	-6745.54	128356.00	0.053 [1]

[1] P_u / ϕP_n controls

Top Girt Design Data (Compression)

Section No.	Elevation ft	Size	L ft	L_u ft	Kl/r	A in^2	P_u lb	ϕP_n lb	Ratio $\frac{P_u}{\phi P_n}$
T1	697 - 680	2L2 1/2x2 1/2x3/16	6.00	5.16	79.5 K=1.00	1.8000	-8350.72	65091.20	0.128 [1]
T2	680 - 660	2L2 1/2x2 1/2x3/16	6.00	5.16	79.5 K=1.00	1.8000	-36625.30	65091.20	0.563 [1]
T3	660 - 640	2L2 1/2x2 1/2x3/16	6.00	5.16	79.5 K=1.00	1.8000	-22714.30	65091.20	0.349 [1]
T4	640 - 620	2L2 1/2x2 1/2x3/16	6.00	5.16	79.5 K=1.00	1.8000	-10117.30	65091.20	0.155 [1]
T5	620 - 600	2L2 1/2x2 1/2x3/16	6.00	5.16	79.5 K=1.00	1.8000	-10175.50	65091.20	0.156 [1]
T6	600 - 580	2L2 1/2x2 1/2x3/16	6.00	5.16	79.5 K=1.00	1.8000	-15963.40	65091.20	0.245 [1]
T7	580 - 560	2L2 1/2x2 1/2x3/16	6.00	5.16	79.5 K=1.00	1.8000	-27224.10	65091.20	0.418 [1]
T8	560 - 540	2L2 1/2x2 1/2x3/16	6.00	5.16	79.5 K=1.00	1.8000	-40496.40	65091.20	0.622 [1]
T9	540 - 520	2L2 1/2x2 1/2x3/16	6.00	5.14	79.2 K=1.00	1.8000	-43343.60	65291.30	0.664 [1]
T10	520 - 500	2L2 1/2x2 1/2x3/16	6.00	5.14	79.2 K=1.00	1.8000	-30364.30	65291.30	0.465 [1]
T11	500 - 480	2L2 1/2x2 1/2x3/16	6.00	5.14	79.2 K=1.00	1.8000	-12625.10	65291.30	0.193 [1]
T12	480 - 460	2L2 1/2x2 1/2x3/16	6.00	5.14	79.2 K=1.00	1.8000	-12261.10	65291.30	0.188 [1]
T13	460 - 440	2L2 1/2x2 1/2x3/16	6.00	5.14	79.2 K=1.00	1.8000	-25781.40	65291.30	0.395 [1]
T14	440 - 420	2L2 1/2x2 1/2x3/16	6.00	5.11	78.9 K=1.00	1.8000	-37943.90	65490.50	0.579 [1]
T15	420 - 400	2L2 1/2x2 1/2x3/16	6.00	5.11	78.9 K=1.00	1.8000	-47772.10	65490.50	0.729 [1]
T16	400 - 380	2L2 1/2x2 1/2x3/16	6.00	5.11	78.9 K=1.00	1.8000	-33141.20	65490.50	0.506 [1]
T17	380 - 360	2L2 1/2x2 1/2x3/16	6.00	5.11	78.9 K=1.00	1.8000	-22312.30	65490.50	0.341 [1]
T18	360 - 340	2L2 1/2x2 1/2x3/16	6.00	5.11	78.9 K=1.00	1.8000	-14116.40	65490.50	0.216 [1]
T19	340 - 320	2L2 1/2x2 1/2x3/16	6.00	5.11	78.9 K=1.00	1.8000	-11573.00	65490.50	0.177 [1]

Section No.	Elevation ft	Size	L ft	L_u ft	Kl/r	A in^2	P_u lb	ϕP_n lb	Ratio $\frac{P_u}{\phi P_n}$
T20	320 - 300	2L2 1/2x2 1/2x3/16	6.00	5.11	78.9 K=1.00	1.8000	-22465.30	65490.50	0.343 [1] ✔
T21	300 - 280	2L2 1/2x2 1/2x3/16	6.00	5.11	78.9 K=1.00	1.8000	-33283.20	65490.50	0.508 [1] ✔
T22	280 - 260	2L2 1/2x2 1/2x3/16	6.00	5.11	78.9 K=1.00	1.8000	-42170.60	65490.50	0.644 [1] ✔
T23	260 - 240	2L2 1/2x2 1/2x3/16	6.00	5.05	77.9 K=1.00	1.8000	-34796.00	66083.30	0.527 [1] ✔
T24	240 - 220	2L2 1/2x2 1/2x3/16	6.00	5.05	77.9 K=1.00	1.8000	-24425.60	66083.30	0.370 [1] ✔
T25	220 - 200	2L2 1/2x2 1/2x3/16	6.00	5.05	77.9 K=1.00	1.8000	-17326.80	66083.30	0.262 [1] ✔
T26	200 - 180	2L2 1/2x2 1/2x3/16	6.00	5.05	77.9 K=1.00	1.8000	-13824.20	66083.30	0.209 [1] ✔
T27	180 - 160	2L2 1/2x2 1/2x3/16	6.00	5.05	77.9 K=1.00	1.8000	-15499.50	66083.30	0.235 [1] ✔
T28	160 - 140	2L2 1/2x2 1/2x3/16	6.00	5.05	77.9 K=1.00	1.8000	-26163.60	66083.30	0.396 [1] ✔
T29	140 - 120	2L2 1/2x2 1/2x3/16	6.00	5.05	77.9 K=1.00	1.8000	-34732.70	66083.30	0.526 [1] ✔
T30	120 - 100	2L2 1/2x2 1/2x3/16	6.00	5.05	77.9 K=1.00	1.8000	-22952.00	66083.30	0.347 [1] ✔
T31	100 - 80	2L2 1/2x2 1/2x3/16	6.00	5.05	77.9 K=1.00	1.8000	-19927.10	66083.30	0.302 [1] ✔
T32	80 - 60	2L2 1/2x2 1/2x3/16	6.00	5.05	77.9 K=1.00	1.8000	-18706.00	66083.30	0.283 [1] ✔
T33	60 - 40	2L2 1/2x2 1/2x3/16	6.00	5.05	77.9 K=1.00	1.8000	-26170.00	66083.30	0.396 [1] ✔
T34	40 - 20	2L2 1/2x2 1/2x3/16	6.00	5.05	77.9 K=1.00	1.8000	-34434.40	66083.30	0.521 [1] ✔
T35	20 - 10	2L2 1/2x2 1/2x3/16	6.00	5.05	77.9 K=1.00	1.8000	-40810.20	66083.30	0.618 [1] ✔
T36	10 - 0	2L4x4x5/16	5.95	3.74	26.9 K=1.00	4.8000	-6745.54	196866.00	0.034 [1] ✔

[1] P_u / ϕP_n controls

Top Guy Pull-Off Design Data (Compression)

Section No.	Elevation ft	Size	L ft	L_u ft	Kl/r	A in^2	P_u lb	ϕP_n lb	Ratio $\frac{P_u}{\phi P_n}$
T1	697 - 680	2L3x3x3/8	6.00	5.71	75.0 K=1.00	4.2200	-3492.91	159128.00	0.022 [1] ✔
T15	420 - 400	2L3x3x3/8	6.00	5.67	74.5 K=1.00	4.2200	-1390.34	159882.00	0.009 [1] ✔
T29	140 - 120	2L3x3x3/8	6.00	5.60	73.7 K=1.00	4.2200	-5547.36	161004.00	0.034 [1] ✔

[1] P_u / ϕP_n controls

Tension Checks

Leg Design Data (Tension)

Section No.	Elevation ft	Size	L ft	L_u ft	Kl/r	A in^2	P_u lb	ϕP_n lb	Ratio $\frac{P_u}{\phi P_n}$
T1	697 - 680	3 1/2	17.00	4.21	57.7	9.6211	2393.51	432951.00	0.006
T2	680 - 660	3 1/2	20.00	4.96	68.0	9.6211	103763.00	432951.00	0.240
T3	660 - 640	3 1/2	20.00	4.96	68.0	9.6211	150871.00	432951.00	0.348 [1]
T4	640 - 620	3 1/2	20.00	4.96	68.0	9.6211	152834.00	432951.00	0.353 [1]
T5	620 - 600	3 1/2	20.00	4.96	68.0	9.6211	152831.00	432951.00	0.353 [1]
T6	600 - 580	3 1/2	20.00	4.96	68.0	9.6211	110643.00	432951.00	0.256 [1]
T7	580 - 560	3 1/2	20.00	4.96	68.0	9.6211	102023.00	432951.00	0.236
T8	560 - 540	3 1/2	20.00	4.96	68.0	9.6211	101009.00	432951.00	0.233
T9	540 - 520	3 3/4	20.00	4.96	63.5	11.0447	94317.90	497010.00	0.190 [1]
T10	520 - 500	3 3/4	20.00	4.96	63.5	11.0447	160890.00	497010.00	0.324 [1]
T11	500 - 480	3 3/4	20.00	4.96	63.5	11.0447	162801.00	497010.00	0.328 [1]
T12	480 - 460	3 3/4	20.00	4.96	63.5	11.0447	160434.00	497010.00	0.323 [1]
T13	460 - 440	3 3/4	20.00	4.96	63.5	11.0447	93902.20	497010.00	0.189 [1]
T14	440 - 420	4	20.00	4.96	59.5	12.5664	62918.30	565487.00	0.111
T15	420 - 400	4	20.00	4.96	59.5	12.5664	59134.00	565487.00	0.105
T17	380 - 360	4	20.00	4.96	59.5	12.5664	50196.10	565487.00	0.089 [1]
T18	360 - 340	4	20.00	4.96	59.5	12.5664	56534.70	565487.00	0.100 [1]
T19	340 - 320	4	20.00	4.96	59.5	12.5664	51196.90	565487.00	0.091 [1]
T21	300 - 280	4	20.00	4.96	59.5	12.5664	24481.40	565487.00	0.043
T22	280 - 260	4	20.00	4.96	59.5	12.5664	20733.00	565487.00	0.037
T23	260 - 240	4 3/4	20.00	4.96	50.1	17.7205	67790.70	797425.00	0.085 [1]
T24	240 - 220	4 3/4	20.00	4.96	50.1	17.7205	179942.00	797425.00	0.226
T25	220 - 200	4 3/4	20.00	4.96	50.1	17.7205	238396.00	797425.00	0.299 [1]
T26	200 - 180	4 3/4	20.00	4.96	50.1	17.7205	241462.00	797425.00	0.303 [1]
T27	180 - 160	4 3/4	20.00	4.96	50.1	17.7205	241457.00	797425.00	0.303 [1]
T28	160 - 140	4 3/4	20.00	4.96	50.1	17.7205	188800.00	797425.00	0.237 [1]
T29	140 - 120	4 3/4	20.00	4.96	50.1	17.7205	123557.00	797425.00	0.155 [1]
T30	120 - 100	4 3/4	20.00	4.96	50.1	17.7205	182771.00	797425.00	0.229 [1]
T31	100 - 80	4 3/4	20.00	4.96	50.1	17.7205	182819.00	797425.00	0.229
T32	80 - 60	4 3/4	20.00	4.96	50.1	17.7205	179619.00	797425.00	0.225
T33	60 - 40	4 3/4	20.00	4.96	50.1	17.7205	125646.00	797425.00	0.158 [1]
T34	40 - 20	4 3/4	20.00	4.96	50.1	17.7205	25927.70	797425.00	0.033 [1]

[1] P_u / ϕP_n controls

Leg Bending Design Data (Tension)

Section No.	Elevation ft	Size	M_{ux} lb-ft	ϕM_{nx} lb-ft	Ratio $\frac{M_{ux}}{\phi M_{nx}}$	M_{uy} lb-ft	ϕM_{ny} lb-ft	Ratio $\frac{M_{uy}}{\phi M_{ny}}$
T1	697 - 680	3 1/2	3900.67	26796.92	0.146	0.00	26796.92	0.000
T2	680 - 660	3 1/2	2432.58	26796.92	0.091	0.00	26796.92	0.000
T3	660 - 640	3 1/2	856.68	26796.92	0.032	0.00	26796.92	0.000
T4	640 - 620	3 1/2	378.40	26796.92	0.014	0.00	26796.92	0.000

Section No.	Elevation ft	Size	M_{ux} lb-ft	ϕM_{nx} lb-ft	Ratio $\frac{M_{ux}}{\phi M_{nx}}$	M_{uy} lb-ft	ϕM_{ny} lb-ft	Ratio $\frac{M_{uy}}{\phi M_{ny}}$
T5	620 - 600	3 1/2	218.97	26796.92	0.008	0.00	26796.92	0.000
T6	600 - 580	3 1/2	216.49	26796.92	0.008	0.00	26796.92	0.000
T7	580 - 560	3 1/2	3832.27	26796.92	0.143	0.00	26796.92	0.000
T8	560 - 540	3 1/2	3976.80	26796.92	0.148	0.00	26796.92	0.000
T9	540 - 520	3 3/4	2810.28	32959.00	0.085	0.00	32959.00	0.000
T10	520 - 500	3 3/4	1201.09	32959.00	0.036	0.00	32959.00	0.000
T11	500 - 480	3 3/4	421.33	32959.00	0.013	0.00	32959.00	0.000
T12	480 - 460	3 3/4	443.35	32959.00	0.013	0.00	32959.00	0.000
T13	460 - 440	3 3/4	628.10	32959.00	0.019	0.00	32959.00	0.000
T14	440 - 420	4	4888.57	40000.00	0.122	0.00	40000.00	0.000
T15	420 - 400	4	4908.88	40000.00	0.123	0.00	40000.00	0.000
T17	380 - 360	4	647.35	40000.00	0.016	0.00	40000.00	0.000
T18	360 - 340	4	423.56	40000.00	0.011	0.00	40000.00	0.000
T19	340 - 320	4	501.84	40000.00	0.013	0.00	40000.00	0.000
T21	300 - 280	4	4309.28	40000.00	0.108	0.00	40000.00	0.000
T22	280 - 260	4	4574.99	40000.00	0.114	0.00	40000.00	0.000
T23	260 - 240	4 3/4	2791.47	66982.42	0.042	0.00	66982.42	0.000
T24	240 - 220	4 3/4	1992.41	66982.42	0.030	0.00	66982.42	0.000
T25	220 - 200	4 3/4	470.13	66982.42	0.007	0.00	66982.42	0.000
T26	200 - 180	4 3/4	1071.56	66982.42	0.016	0.00	66982.42	0.000
T27	180 - 160	4 3/4	1499.81	66982.42	0.022	0.00	66982.42	0.000
T28	160 - 140	4 3/4	1378.43	66982.42	0.021	0.00	66982.42	0.000
T29	140 - 120	4 3/4	1747.45	66982.42	0.026	0.00	66982.42	0.000
T30	120 - 100	4 3/4	1138.44	66982.42	0.017	0.00	66982.42	0.000
T31	100 - 80	4 3/4	2456.06	66982.42	0.037	0.00	66982.42	0.000
T32	80 - 60	4 3/4	2212.14	66982.42	0.033	0.00	66982.42	0.000
T33	60 - 40	4 3/4	1444.87	66982.42	0.022	0.00	66982.42	0.000
T34	40 - 20	4 3/4	898.48	66982.42	0.013	0.00	66982.42	0.000

Leg Interaction Design Data (Tension)

Section No.	Elevation ft	Size	Ratio $\frac{P_u}{\phi P_n}$	Ratio $\frac{M_{ux}}{\phi M_{nx}}$	Ratio $\frac{M_{uy}}{\phi M_{ny}}$	Comb. Stress Ratio	Allow. Stress Ratio	Criteria
T1	697 - 680	3 1/2	0.006	0.146	0.000	0.148 ✔	1.000	4.8.1 ✔
T2	680 - 660	3 1/2	0.240	0.091	0.000	0.294 ✔	1.000	4.8.1 ✔
T3	660 - 640	3 1/2	0.348	0.032	0.000	0.348 [1] ✔	1.000	4.8.1 ✔
T4	640 - 620	3 1/2	0.353	0.014	0.000	0.353 [1] ✔	1.000	4.8.1 ✔
T5	620 - 600	3 1/2	0.353	0.008	0.000	0.353 [1] ✔	1.000	4.8.1 ✔
T6	600 - 580	3 1/2	0.256	0.008	0.000	0.256 [1] ✔	1.000	4.8.1 ✔
T7	580 - 560	3 1/2	0.236	0.143	0.000	0.337 ✔	1.000	4.8.1 ✔
T8	560 - 540	3 1/2	0.233	0.148	0.000	0.339 ✔	1.000	4.8.1 ✔
T9	540 - 520	3 3/4	0.190	0.085	0.000	0.190 [1] ✔	1.000	4.8.1 ✔
T10	520 - 500	3 3/4	0.324	0.036	0.000	0.324 [1] ✔	1.000	4.8.1 ✔

Section No.	Elevation ft	Size	Ratio $\frac{P_u}{\phi P_n}$	Ratio $\frac{M_{ux}}{\phi M_{nx}}$	Ratio $\frac{M_{uy}}{\phi M_{ny}}$	Comb. Stress Ratio	Allow. Stress Ratio	Criteria
T11	500 - 480	3 3/4	0.328	0.013	0.000	0.328 [1]	1.000	4.8.1
T12	480 - 460	3 3/4	0.323	0.013	0.000	0.323 [1]	1.000	4.8.1
T13	460 - 440	3 3/4	0.189	0.019	0.000	0.189 [1]	1.000	4.8.1
T14	440 - 420	4	0.111	0.122	0.000	0.178	1.000	4.8.1
T15	420 - 400	4	0.105	0.123	0.000	0.175	1.000	4.8.1
T17	380 - 360	4	0.089	0.016	0.000	0.089 [1]	1.000	4.8.1
T18	360 - 340	4	0.100	0.011	0.000	0.100 [1]	1.000	4.8.1
T19	340 - 320	4	0.091	0.013	0.000	0.091 [1]	1.000	4.8.1
T21	300 - 280	4	0.043	0.108	0.000	0.129	1.000	4.8.1
T22	280 - 260	4	0.037	0.114	0.000	0.133	1.000	4.8.1
T23	260 - 240	4 3/4	0.085	0.042	0.000	0.085 [1]	1.000	4.8.1
T24	240 - 220	4 3/4	0.226	0.030	0.000	0.227	1.000	4.8.1
T25	220 - 200	4 3/4	0.299	0.007	0.000	0.299 [1]	1.000	4.8.1
T26	200 - 180	4 3/4	0.303	0.016	0.000	0.303 [1]	1.000	4.8.1
T27	180 - 160	4 3/4	0.303	0.022	0.000	0.303 [1]	1.000	4.8.1
T28	160 - 140	4 3/4	0.237	0.021	0.000	0.237 [1]	1.000	4.8.1
T29	140 - 120	4 3/4	0.155	0.026	0.000	0.155 [1]	1.000	4.8.1
T30	120 - 100	4 3/4	0.229	0.017	0.000	0.229 [1]	1.000	4.8.1
T31	100 - 80	4 3/4	0.229	0.037	0.000	0.236	1.000	4.8.1
T32	80 - 60	4 3/4	0.225	0.033	0.000	0.230	1.000	4.8.1
T33	60 - 40	4 3/4	0.158	0.022	0.000	0.158 [1]	1.000	4.8.1
T34	40 - 20	4 3/4	0.033	0.013	0.000	0.033 [1]	1.000	4.8.1

[1] P_u / ϕP_n controls

Diagonal Design Data (Tension)

Section No.	Elevation ft	Size	L ft	L_u ft	Kl/r	A in^2	P_u lb	ϕP_n lb	Ratio $\frac{P_u}{\phi P_n}$
T1	697 - 680	1 1/4	7.33	6.97	267.7	1.2272	46952.60	55223.30	0.850 [1]
T2	680 - 660	1 1/4	7.78	7.41	284.4	1.2272	47270.40	55223.30	0.856 [1]
T3	660 - 640	1	7.78	7.41	355.5	0.7854	27245.50	35342.90	0.771 [1]
T4	640 - 620	7/8	7.78	7.41	406.2	0.6013	12175.30	27059.40	0.450 [1]
T5	620 - 600	1	7.78	7.41	355.5	0.7854	18785.40	35342.90	0.532 [1]
T6	600 - 580	1 1/8	7.78	7.41	316.0	0.9940	33268.10	44730.90	0.744 [1]
T7	580 - 560	1 1/4	7.78	7.41	284.4	1.2272	51879.60	55223.30	0.939 [1]
T8	560 - 540	1 3/8	7.78	7.41	258.5	1.4849	63526.70	66820.20	0.951 [1]
T9	540 - 520	1 3/8	7.78	7.38	257.6	1.4849	54835.40	66820.20	0.821 [1]
T10	520 - 500	1 1/8	7.78	7.38	314.8	0.9940	36815.20	44730.90	0.823 [1]
T11	500 - 480	7/8	7.78	7.38	404.7	0.6013	13231.30	27059.40	0.489 [1]
T12	480 - 460	1	7.78	7.38	354.2	0.7854	31484.70	35342.90	0.891 [1]
T13	460 - 440	1 1/4	7.78	7.38	283.3	1.2272	47356.60	55223.30	0.858 [1]
T14	440 - 420	1 3/8	7.78	7.35	256.6	1.4849	62962.80	66820.20	0.942 [1]
T15	420 - 400	1 3/8	7.78	7.35	256.6	1.4849	62656.00	66820.20	0.938 [1]
T16	400 - 380	1 1/8	7.78	7.35	313.7	0.9940	41325.40	44730.90	0.924 [1]
T17	380 - 360	1	7.78	7.35	352.9	0.7854	27060.90	35342.90	0.766 [1]
T18	360 - 340	7/8	7.78	7.35	403.3	0.6013	17234.30	27059.40	0.637 [1]
T19	340 - 320	1	7.78	7.35	352.9	0.7854	27310.70	35342.90	0.773 [1]
T20	320 - 300	1 1/8	7.78	7.35	313.7	0.9940	41456.70	44730.90	0.927 [1]
T21	300 - 280	1 3/8	7.78	7.35	256.6	1.4849	55674.00	66820.20	0.833 [1]
T22	280 - 260	1 3/8	7.78	7.35	256.6	1.4849	55077.20	66820.20	0.824 [1]
T23	260 - 240	1 1/4	7.78	7.27	279.2	1.2272	43551.30	55223.30	0.789 [1]
T24	240 - 220	1 1/8	7.78	7.27	310.2	0.9940	29691.00	44730.90	0.664 [1]
T25	220 - 200	7/8	7.78	7.27	398.8	0.6013	21356.30	27059.40	0.789 [1]
T26	200 - 180	7/8	7.78	7.27	398.8	0.6013	19042.80	27059.40	0.704 [1]

Section No.	Elevation ft	Size	L ft	L_u ft	Kl/r	A in^2	P_u lb	ϕP_n lb	Ratio $\frac{P_u}{\phi P_n}$
T27	180 - 160	1	7.78	7.27	349.0	0.7854	31825.50	35342.90	0.900 [1]
T28	160 - 140	1 1/4	7.78	7.27	279.2	1.2272	46226.90	55223.30	0.837 [1]
T29	140 - 120	1 1/4	7.78	7.27	279.2	1.2272	45906.30	55223.30	0.831 [1]
T30	120 - 100	1	7.78	7.27	349.0	0.7854	28960.10	35342.90	0.819 [1]
T31	100 - 80	7/8	7.78	7.27	398.8	0.6013	25936.80	27059.40	0.959 [1]
T32	80 - 60	1	7.78	7.27	349.0	0.7854	32232.40	35342.90	0.912 [1]
T33	60 - 40	1 1/4	7.78	7.27	279.2	1.2272	43596.00	55223.30	0.789 [1]
T34	40 - 20	1 1/4	7.78	7.27	279.2	1.2272	52133.60	55223.30	0.944 [1]
T35	20 - 10	1 1/2	7.76	7.25	231.9	1.7672	66051.80	79521.60	0.831 [1]
T36	10 - 0	2L3 1/2x3 1/2x1/4	5.21	3.93	49.0	2.8800	36932.20	140400.00	0.263 [1]

[1] P_u / ϕP_n controls

Horizontal Design Data (Tension)

Section No.	Elevation ft	Size	L ft	L_u ft	Kl/r	A in^2	P_u lb	ϕP_n lb	Ratio $\frac{P_u}{\phi P_n}$
T1	697 - 680	2L2 1/2x2 1/2x3/16	6.00	5.16	88.0	1.0688	2179.00	52101.60	0.042 [1]
T2	680 - 660	2L2 1/2x2 1/2x3/16	6.00	5.16	88.0	1.0688	3593.68	52101.60	0.069 [1]
T3	660 - 640	2L2 1/2x2 1/2x3/16	6.00	5.16	88.0	1.0688	4215.98	52101.60	0.081 [1]
T4	640 - 620	2L2 1/2x2 1/2x3/16	6.00	5.16	88.0	1.0688	4288.78	52101.60	0.082 [1]
T5	620 - 600	2L2 1/2x2 1/2x3/16	6.00	5.16	88.0	1.0688	4155.04	52101.60	0.080 [1]
T6	600 - 580	2L2 1/2x2 1/2x3/16	6.00	5.16	88.0	1.0688	3356.86	52101.60	0.064 [1]
T7	580 - 560	2L2 1/2x2 1/2x3/16	6.00	5.16	88.0	1.0688	4197.27	52101.60	0.081 [1]
T8	560 - 540	2L2 1/2x2 1/2x3/16	6.00	5.16	88.0	1.0688	5152.78	52101.60	0.099 [1]
T9	540 - 520	2L2 1/2x2 1/2x3/16	6.00	5.14	87.7	1.0688	4920.47	52101.60	0.094 [1]
T10	520 - 500	2L2 1/2x2 1/2x3/16	6.00	5.14	87.7	1.0688	6145.25	52101.60	0.118 [1]

Section No.	Elevation ft	Size	L ft	L_u ft	Kl/r	A in^2	P_u lb	ϕP_n lb	Ratio $\frac{P_u}{\phi P_n}$
T11	500 - 480	2L2 1/2x2 1/2x3/16	6.00	5.14	87.7	1.0688	6329.47	52101.60	0.121 [1] ✔
T12	480 - 460	2L2 1/2x2 1/2x3/16	6.00	5.14	87.7	1.0688	6209.28	52101.60	0.119 [1] ✔
T13	460 - 440	2L2 1/2x2 1/2x3/16	6.00	5.14	87.7	1.0688	5433.81	52101.60	0.104 [1] ✔
T14	440 - 420	2L2 1/2x2 1/2x3/16	6.00	5.11	87.4	1.0688	7032.93	52101.60	0.135 [1] ✔
T15	420 - 400	2L2 1/2x2 1/2x3/16	6.00	5.11	87.4	1.0688	7486.15	52101.60	0.144 [1] ✔
T16	400 - 380	2L2 1/2x2 1/2x3/16	6.00	5.11	87.4	1.0688	5333.43	52101.60	0.102 [1] ✔
T17	380 - 360	2L2 1/2x2 1/2x3/16	6.00	5.11	87.4	1.0688	6159.44	52101.60	0.118 [1] ✔
T18	360 - 340	2L2 1/2x2 1/2x3/16	6.00	5.11	87.4	1.0688	6416.90	52101.60	0.123 [1] ✔
T19	340 - 320	2L2 1/2x2 1/2x3/16	6.00	5.11	87.4	1.0688	6300.18	52101.60	0.121 [1] ✔
T20	320 - 300	2L2 1/2x2 1/2x3/16	6.00	5.11	87.4	1.0688	5649.48	52101.60	0.108 [1] ✔
T21	300 - 280	2L2 1/2x2 1/2x3/16	6.00	5.11	87.4	1.0688	6702.93	52101.60	0.129 [1] ✔
T22	280 - 260	2L2 1/2x2 1/2x3/16	6.00	5.11	87.4	1.0688	7432.15	52101.60	0.143 [1] ✔
T23	260 - 240	2L2 1/2x2 1/2x3/16	6.00	5.05	86.4	1.0688	7903.46	52101.60	0.152 [1] ✔
T24	240 - 220	2L2 1/2x2 1/2x3/16	6.00	5.05	86.4	1.0688	9595.98	52101.60	0.184 [1] ✔
T25	220 - 200	2L2 1/2x2 1/2x3/16	6.00	5.05	86.4	1.0688	10541.50	52101.60	0.202 [1] ✔
T26	200 - 180	2L2 1/2x2 1/2x3/16	6.00	5.05	86.4	1.0688	10729.70	52101.60	0.206 [1] ✔
T27	180 - 160	2L2 1/2x2 1/2x3/16	6.00	5.05	86.4	1.0688	10569.00	52101.60	0.203 [1] ✔
T28	160 - 140	2L2 1/2x2 1/2x3/16	6.00	5.05	86.4	1.0688	9648.38	52101.60	0.185 [1] ✔
T29	140 - 120	2L2 1/2x2 1/2x3/16	6.00	5.05	86.4	1.0688	9305.05	52101.60	0.179 [1] ✔
T30	120 - 100	2L2 1/2x2 1/2x3/16	6.00	5.05	86.4	1.0688	10418.50	52101.60	0.200 [1] ✔
T31	100 - 80	2L2 1/2x2 1/2x3/16	6.00	5.05	86.4	1.0688	10713.90	52101.60	0.206 [1] ✔
T32	80 - 60	2L2 1/2x2 1/2x3/16	6.00	5.05	86.4	1.0688	10640.10	52101.60	0.204 [1] ✔
T33	60 - 40	2L2 1/2x2 1/2x3/16	6.00	5.05	86.4	1.0688	9951.41	52101.60	0.191 [1] ✔
T34	40 - 20	2L2 1/2x2 1/2x3/16	6.00	5.05	86.4	1.0688	8796.30	52101.60	0.169 [1] ✔
T35	20 - 10	2L2 1/2x2 1/2x3/16	6.00	5.05	86.4	1.0688	7073.69	52101.60	0.136 [1] ✔
T36	10 - 0	2L3 1/2x3 1/2x1/4	3.00	1.60	15.4	2.1600	6745.54	105300.00	0.064 [1] ✔

Section No.	Elevation ft	Size	L ft	L_u ft	Kl/r	A in^2	P_u lb	ϕP_n lb	Ratio $\frac{P_u}{\phi P_n}$

[1] P_u / ϕP_n controls

Top Girt Design Data (Tension)

Section No.	Elevation ft	Size	L ft	L_u ft	Kl/r	A in^2	P_u lb	ϕP_n lb	Ratio $\frac{P_u}{\phi P_n}$
T2	680 - 660	2L2 1/2x2 1/2x3/16	6.00	5.16	88.0	1.0688	3593.68	52101.60	0.069 [1] ✔
T3	660 - 640	2L2 1/2x2 1/2x3/16	6.00	5.16	88.0	1.0688	4215.98	52101.60	0.081 [1] ✔
T4	640 - 620	2L2 1/2x2 1/2x3/16	6.00	5.16	88.0	1.0688	4288.78	52101.60	0.082 [1] ✔
T5	620 - 600	2L2 1/2x2 1/2x3/16	6.00	5.16	88.0	1.0688	4155.04	52101.60	0.080 [1] ✔
T6	600 - 580	2L2 1/2x2 1/2x3/16	6.00	5.16	88.0	1.0688	3356.86	52101.60	0.064 [1] ✔
T7	580 - 560	2L2 1/2x2 1/2x3/16	6.00	5.16	88.0	1.0688	4197.27	52101.60	0.081 [1] ✔
T8	560 - 540	2L2 1/2x2 1/2x3/16	6.00	5.16	88.0	1.0688	5152.78	52101.60	0.099 [1] ✔
T9	540 - 520	2L2 1/2x2 1/2x3/16	6.00	5.14	87.7	1.0688	4920.47	52101.60	0.094 [1] ✔
T10	520 - 500	2L2 1/2x2 1/2x3/16	6.00	5.14	87.7	1.0688	6145.25	52101.60	0.118 [1] ✔
T11	500 - 480	2L2 1/2x2 1/2x3/16	6.00	5.14	87.7	1.0688	6329.47	52101.60	0.121 [1] ✔
T12	480 - 460	2L2 1/2x2 1/2x3/16	6.00	5.14	87.7	1.0688	6209.28	52101.60	0.119 [1] ✔
T13	460 - 440	2L2 1/2x2 1/2x3/16	6.00	5.14	87.7	1.0688	5433.81	52101.60	0.104 [1] ✔
T14	440 - 420	2L2 1/2x2 1/2x3/16	6.00	5.11	87.4	1.0688	7032.93	52101.60	0.135 [1] ✔
T15	420 - 400	2L2 1/2x2 1/2x3/16	6.00	5.11	87.4	1.0688	7486.15	52101.60	0.144 [1] ✔
T16	400 - 380	2L2 1/2x2 1/2x3/16	6.00	5.11	87.4	1.0688	5333.43	52101.60	0.102 [1] ✔
T17	380 - 360	2L2 1/2x2 1/2x3/16	6.00	5.11	87.4	1.0688	6159.44	52101.60	0.118 [1] ✔
T18	360 - 340	2L2 1/2x2 1/2x3/16	6.00	5.11	87.4	1.0688	6416.90	52101.60	0.123 [1] ✔
T19	340 - 320	2L2 1/2x2 1/2x3/16	6.00	5.11	87.4	1.0688	6300.18	52101.60	0.121 [1] ✔
T20	320 - 300	2L2 1/2x2 1/2x3/16	6.00	5.11	87.4	1.0688	5649.48	52101.60	0.108 [1] ✔
T21	300 - 280	2L2 1/2x2 1/2x3/16	6.00	5.11	87.4	1.0688	6702.93	52101.60	0.129 [1] ✔
T22	280 - 260	2L2 1/2x2 1/2x3/16	6.00	5.11	87.4	1.0688	7432.15	52101.60	0.143 [1] ✔

Section No.	Elevation ft	Size	L ft	L_u ft	Kl/r	A in^2	P_u lb	ϕP_n lb	Ratio $\frac{P_u}{\phi P_n}$
T23	260 - 240	2L2 1/2x2 1/2x3/16	6.00	5.05	86.4	1.0688	7903.46	52101.60	0.152 [1]
T24	240 - 220	2L2 1/2x2 1/2x3/16	6.00	5.05	86.4	1.0688	9595.98	52101.60	0.184 [1]
T25	220 - 200	2L2 1/2x2 1/2x3/16	6.00	5.05	86.4	1.0688	10541.50	52101.60	0.202 [1]
T26	200 - 180	2L2 1/2x2 1/2x3/16	6.00	5.05	86.4	1.0688	10729.70	52101.60	0.206 [1]
T27	180 - 160	2L2 1/2x2 1/2x3/16	6.00	5.05	86.4	1.0688	10569.00	52101.60	0.203 [1]
T28	160 - 140	2L2 1/2x2 1/2x3/16	6.00	5.05	86.4	1.0688	9648.38	52101.60	0.185 [1]
T29	140 - 120	2L2 1/2x2 1/2x3/16	6.00	5.05	86.4	1.0688	9305.05	52101.60	0.179 [1]
T30	120 - 100	2L2 1/2x2 1/2x3/16	6.00	5.05	86.4	1.0688	10418.50	52101.60	0.200 [1]
T31	100 - 80	2L2 1/2x2 1/2x3/16	6.00	5.05	86.4	1.0688	10713.90	52101.60	0.206 [1]
T32	80 - 60	2L2 1/2x2 1/2x3/16	6.00	5.05	86.4	1.0688	10640.10	52101.60	0.204 [1]
T33	60 - 40	2L2 1/2x2 1/2x3/16	6.00	5.05	86.4	1.0688	9951.41	52101.60	0.191 [1]
T34	40 - 20	2L2 1/2x2 1/2x3/16	6.00	5.05	86.4	1.0688	8796.30	52101.60	0.169 [1]
T35	20 - 10	2L2 1/2x2 1/2x3/16	6.00	5.05	86.4	1.0688	7073.69	52101.60	0.136 [1]
T36	10 - 0	2L4x4x5/16	5.95	3.74	29.4	3.0141	62473.00	146936.00	0.425 [1]

[1] P_u / ϕP_n controls

Top Guy Pull-Off Design Data (Tension)

Section No.	Elevation ft	Size	L ft	L_u ft	Kl/r	A in^2	P_u lb	ϕP_n lb	Ratio $\frac{P_u}{\phi P_n}$
T1	697 - 680	2L3x3x3/8	6.00	5.71	75.0	2.5322	27884.10	123444.00	0.226 [1]
T8	560 - 540	2L3x3x3/8	6.00	5.71	75.0	2.5322	51080.00	123444.00	0.414 [1]
T15	420 - 400	2L3x3x3/8	6.00	5.67	74.5	2.5322	49296.20	123444.00	0.399 [1]
T22	280 - 260	2L3x3x3/8	6.00	5.67	74.5	2.5322	50205.70	123444.00	0.407 [1]
T29	140 - 120	2L3x3x3/8	6.00	5.60	73.7	2.5322	38494.50	123444.00	0.312 [1]

[1] P_u / ϕP_n controls

Section Capacity Table

Section No.	Elevation ft	Component Type	Size	Critical Element	P lb	ϕP_{allow} lb	% Capacity	Pass Fail
T1	697 - 680	Leg	3 1/2	2	-125747.00	339365.00	41.9	Pass
		Diagonal	1 1/4	11	46952.60	55223.30	85.0	Pass
		Horizontal	2L2 1/2x2 1/2x3/16	22	-16832.30	65091.20	25.9	Pass
		Top Girt	2L2 1/2x2 1/2x3/16	4	-8350.72	65091.20	12.8	Pass
		Guy A@684.292	1 3/8" UHS	1365	138024.00	159600.00	86.5	Pass
		Guy B@684.292	1 3/8" UHS	1364	144855.00	159600.00	90.8	Pass
		Guy C@684.292	1 3/8" UHS	1363	134047.00	159600.00	84.0	Pass
		Top Guy	2L3x3x3/8	13	27884.10	123444.00	22.6	Pass
		Pull-Off@684.292					32.1 (b)	
T2	680 - 660	Leg	3 1/2	41	-207481.00	308749.00	67.2	Pass
		Diagonal	1 1/4	77	47270.40	55223.30	85.6	Pass
		Horizontal	2L2 1/2x2 1/2x3/16	72	-33642.40	65091.20	51.7	Pass
		Top Girt	2L2 1/2x2 1/2x3/16	45	-36625.30	65091.20	56.3	Pass
T3	660 - 640	Leg	3 1/2	79	-243410.00	308749.00	78.8	Pass
		Diagonal	1	116	27245.50	35342.90	77.1	Pass
		Horizontal	2L2 1/2x2 1/2x3/16	111	-18474.10	65091.20	28.4	Pass
		Top Girt	2L2 1/2x2 1/2x3/16	84	-22714.30	65091.20	34.9	Pass
T4	640 - 620	Leg	3 1/2	118	-247613.00	308749.00	80.2	Pass
		Diagonal	7/8	125	12175.30	27059.40	45.0	Pass
		Horizontal	2L2 1/2x2 1/2x3/16	140	-9346.40	65091.20	14.4	Pass
		Top Girt	2L2 1/2x2 1/2x3/16	122	-10117.30	65091.20	15.5	Pass
T5	620 - 600	Leg	3 1/2	157	-239891.00	308749.00	77.7	Pass
		Diagonal	1	167	18785.40	35342.90	53.2	Pass
		Horizontal	2L2 1/2x2 1/2x3/16	171	-13341.40	65091.20	20.5	Pass
		Top Girt	2L2 1/2x2 1/2x3/16	161	-10175.50	65091.20	15.6	Pass
T6	600 - 580	Leg	3 1/2	196	-193808.00	308749.00	62.8	Pass
		Diagonal	1 1/8	207	33268.10	44730.90	74.4	Pass
		Horizontal	2L2 1/2x2 1/2x3/16	210	-24021.10	65091.20	36.9	Pass
		Top Girt	2L2 1/2x2 1/2x3/16	201	-15963.40	65091.20	24.5	Pass
T7	580 - 560	Leg	3 1/2	237	-242329.00	308749.00	78.5	Pass
		Diagonal	1 1/4	246	51879.60	55223.30	93.9	Pass
		Horizontal	2L2 1/2x2 1/2x3/16	249	-38107.50	65091.20	58.5	Pass
		Top Girt	2L2 1/2x2 1/2x3/16	240	-27224.10	65091.20	41.8	Pass
T8	560 - 540	Leg	3 1/2	274	-297496.00	308749.00	96.4	Pass
		Diagonal	1 3/8	302	63526.70	66820.20	95.1	Pass
		Horizontal	2L2 1/2x2 1/2x3/16	297	-47485.00	65091.20	73.0	Pass
		Top Girt	2L2 1/2x2 1/2x3/16	279	-40496.40	65091.20	62.2	Pass
		Guy A@554.958	1 5/8" UHS	1368	198750.00	223200.00	89.0	Pass
		Guy B@554.958	1 5/8" UHS	1367	206060.00	223200.00	92.3	Pass
		Guy C@554.958	1 5/8" UHS	1366	193832.00	223200.00	86.8	Pass
		Top Guy	2L3x3x3/8	304	51080.00	123444.00	41.4	Pass
		Pull-Off@554.958					58.8 (b)	
T9	540 - 520	Leg	3 3/4	313	-284083.00	370218.00	76.7	Pass
		Diagonal	1 3/8	350	54835.40	66820.20	82.1	Pass
		Horizontal	2L2 1/2x2 1/2x3/16	345	-39220.30	65291.30	60.1	Pass
		Top Girt	2L2 1/2x2 1/2x3/16	318	-43343.60	65291.30	66.4	Pass
T10	520 - 500	Leg	3 3/4	352	-354796.00	370218.00	95.8	Pass
		Diagonal	1 1/8	389	36815.20	44730.90	82.3	Pass
		Horizontal	2L2 1/2x2 1/2x3/16	384	-25431.40	65291.30	39.0	Pass
		Top Girt	2L2 1/2x2 1/2x3/16	357	-30364.30	65291.30	46.5	Pass
T11	500 - 480	Leg	3 3/4	391	-365432.00	370218.00	98.7	Pass
		Diagonal	7/8	427	13231.30	27059.40	48.9	Pass
		Horizontal	2L2 1/2x2 1/2x3/16	404	-8646.38	65291.30	13.2	Pass
							15.7 (b)	
		Top Girt	2L2 1/2x2 1/2x3/16	395	-12625.10	65291.30	19.3	Pass

Section No.	Elevation ft	Component Type	Size	Critical Element	P lb	ϕP_{allow} lb	% Capacity	Pass Fail
T12	480 - 460	Leg	3 3/4	430	-358493.00	370218.00	96.8	Pass
		Diagonal	1	441	31484.70	35342.90	89.1	Pass
		Horizontal	2L2 1/2x2 1/2x3/16	444	-23007.20	65291.30	35.2	Pass
		Top Girt	2L2 1/2x2 1/2x3/16	435	-12261.10	65291.30	18.8	Pass
T13	460 - 440	Leg	3 3/4	469	-313721.00	370218.00	84.7	Pass
		Diagonal	1 1/4	480	47356.60	55223.30	85.8	Pass
		Horizontal	2L2 1/2x2 1/2x3/16	483	-34853.40	65291.30	53.4	Pass
		Top Girt	2L2 1/2x2 1/2x3/16	474	-25781.40	65291.30	39.5	Pass
T14	440 - 420	Leg	4	508	-406047.00	436520.00	93.0	Pass
		Diagonal	1 3/8	519	62962.80	66820.20	94.2	Pass
		Horizontal	2L2 1/2x2 1/2x3/16	522	-46954.00	65490.50	71.7	Pass
		Top Girt	2L2 1/2x2 1/2x3/16	513	-37943.90	65490.50	57.9	Pass
T15	420 - 400	Leg	4	547	-432213.00	436520.00	99.0	Pass
		Diagonal	1 3/8	585	62656.00	66820.20	93.8	Pass
		Horizontal	2L2 1/2x2 1/2x3/16	570	-36395.80	65490.50	55.6	Pass
		Top Girt	2L2 1/2x2 1/2x3/16	552	-47772.10	65490.50	72.9	Pass
		Guy A@414.958	1 1/2" UHS	1371	167117.00	189600.00	88.1	Pass
		Guy B@414.958	1 1/2" UHS	1370	168005.00	189600.00	88.6	Pass
		Guy C@414.958	1 1/2" UHS	1369	165389.00	189600.00	87.2	Pass
		Top Guy	2L3x3x3/8	579	49296.20	123444.00	39.9	Pass
		Pull-Off@414.958					56.8 (b)	
T16	400 - 380	Leg	4	586	-307926.00	436520.00	70.5	Pass
		Diagonal	1 1/8	623	41325.40	44730.90	92.4	Pass
		Horizontal	2L2 1/2x2 1/2x3/16	618	-29582.80	65490.50	45.2	Pass
		Top Girt	2L2 1/2x2 1/2x3/16	591	-33141.20	65490.50	50.6	Pass
T17	380 - 360	Leg	4	625	-355616.00	436520.00	81.5	Pass
		Diagonal	1	660	27060.90	35342.90	76.6	Pass
		Horizontal	2L2 1/2x2 1/2x3/16	656	-19161.50	65490.50	29.3	Pass
		Top Girt	2L2 1/2x2 1/2x3/16	629	-22312.30	65490.50	34.1	Pass
T18	360 - 340	Leg	4	664	-370480.00	436520.00	84.9	Pass
		Diagonal	7/8	698	17234.30	27059.40	63.7	Pass
		Horizontal	2L2 1/2x2 1/2x3/16	694	-12599.80	65490.50	19.2	Pass
		Top Girt	2L2 1/2x2 1/2x3/16	667	-14116.40	65490.50	21.6	Pass
T19	340 - 320	Leg	4	703	-363741.00	436520.00	83.3	Pass
		Diagonal	1	711	27310.70	35342.90	77.3	Pass
		Horizontal	2L2 1/2x2 1/2x3/16	716	-19812.10	65490.50	30.3	Pass
		Top Girt	2L2 1/2x2 1/2x3/16	707	-11573.00	65490.50	17.7	Pass
T20	320 - 300	Leg	4	742	-326173.00	436520.00	74.7	Pass
		Diagonal	1 1/8	753	41456.70	44730.90	92.7	Pass
		Horizontal	2L2 1/2x2 1/2x3/16	756	-30612.50	65490.50	46.7	Pass
		Top Girt	2L2 1/2x2 1/2x3/16	746	-22465.30	65490.50	34.3	Pass
T21	300 - 280	Leg	4	781	-386994.00	436520.00	88.7	Pass
		Diagonal	1 3/8	792	55674.00	66820.20	83.3	Pass
		Horizontal	2L2 1/2x2 1/2x3/16	795	-41459.60	65490.50	63.3	Pass
		Top Girt	2L2 1/2x2 1/2x3/16	786	-33283.20	65490.50	50.8	Pass
T22	280 - 260	Leg	4	820	-429096.00	436520.00	98.3	Pass
		Diagonal	1 3/8	858	55077.20	66820.20	82.4	Pass
		Horizontal	2L2 1/2x2 1/2x3/16	834	-37187.40	65490.50	56.8	Pass
		Top Girt	2L2 1/2x2 1/2x3/16	825	-42170.60	65490.50	64.4	Pass
		Guy A@274.958	1 3/8" UHS	1374	145469.00	159600.00	91.1	Pass
		Guy B@274.958	1 3/8" UHS	1373	142389.00	159600.00	89.2	Pass
		Guy C@274.958	1 3/8" UHS	1372	146893.00	159600.00	92.0	Pass
		Top Guy	2L3x3x3/8	852	50205.70	123444.00	40.7	Pass
		Pull-Off@274.958					57.8 (b)	
T23	260 - 240	Leg	4 3/4	859	-456306.00	663696.00	68.8	Pass
		Diagonal	1 1/4	896	43551.30	55223.30	78.9	Pass
		Horizontal	2L2 1/2x2 1/2x3/16	891	-31277.50	66083.30	47.3	Pass
		Top Girt	2L2 1/2x2 1/2x3/16	864	-34796.00	66083.30	52.7	Pass
T24	240 - 220	Leg	4 3/4	898	-554024.00	663696.00	83.5	Pass
		Diagonal	1 1/8	936	29691.00	44730.90	66.4	Pass
		Horizontal	2L2 1/2x2 1/2x3/16	930	-21248.30	66083.30	32.2	Pass

Section No.	Elevation ft	Component Type	Size	Critical Element	P lb	ϕP_{allow} lb	% Capacity	Pass Fail
		Top Girt	2L2 1/2x2 1/2x3/16	903	-24425.60	66083.30	37.0	Pass
T25	220 - 200	Leg	4 3/4	937	-608615.00	663696.00	91.7	Pass
		Diagonal	7/8	971	21356.30	27059.40	78.9	Pass
		Horizontal	2L2 1/2x2 1/2x3/16	967	-16037.60	66083.30	24.3	Pass
							26.2 (b)	
		Top Girt	2L2 1/2x2 1/2x3/16	940	-17326.80	66083.30	26.2	Pass
T26	200 - 180	Leg	4 3/4	976	-619482.00	663696.00	93.3	Pass
		Diagonal	7/8	987	19042.80	27059.40	70.4	Pass
		Horizontal	2L2 1/2x2 1/2x3/16	990	10729.70	52101.60	20.6	Pass
							26.7 (b)	
		Top Girt	2L2 1/2x2 1/2x3/16	979	-13824.20	66083.30	20.9	Pass
							26.7 (b)	
T27	180 - 160	Leg	4 3/4	1015	-610204.00	663696.00	91.9	Pass
		Diagonal	1	1026	31825.50	35342.90	90.0	Pass
		Horizontal	2L2 1/2x2 1/2x3/16	1029	-23773.10	66083.30	36.0	Pass
		Top Girt	2L2 1/2x2 1/2x3/16	1020	-15499.50	66083.30	23.5	Pass
							26.3 (b)	
T28	160 - 140	Leg	4 3/4	1054	-557049.00	663696.00	83.9	Pass
		Diagonal	1 1/4	1065	46226.90	55223.30	83.7	Pass
		Horizontal	2L2 1/2x2 1/2x3/16	1068	-34532.30	66083.30	52.3	Pass
		Top Girt	2L2 1/2x2 1/2x3/16	1059	-26163.60	66083.30	39.6	Pass
T29	140 - 120	Leg	4 3/4	1093	-537227.00	663696.00	80.9	Pass
		Diagonal	1 1/4	1131	45906.30	55223.30	83.1	Pass
		Horizontal	2L2 1/2x2 1/2x3/16	1105	-24400.80	66083.30	36.9	Pass
		Top Girt	2L2 1/2x2 1/2x3/16	1098	-34732.70	66083.30	52.6	Pass
		Guy A@134.958	1 1/8" UHS	1377	94648.80	107640.00	87.9	Pass
		Guy B@134.958	1 1/8" UHS	1376	94710.40	107640.00	88.0	Pass
		Guy C@134.958	1 1/8" UHS	1375	91763.80	107640.00	85.3	Pass
		Top Guy	2L3x3x3/8	1123	38494.50	123444.00	31.2	Pass
		Pull-Off@134.958					44.3 (b)	
T30	120 - 100	Leg	4 3/4	1132	-601511.00	663696.00	90.6	Pass
		Diagonal	1	1165	28960.10	35342.90	81.9	Pass
		Horizontal	2L2 1/2x2 1/2x3/16	1162	-21732.90	66083.30	32.9	Pass
		Top Girt	2L2 1/2x2 1/2x3/16	1135	-22952.00	66083.30	34.7	Pass
T31	100 - 80	Leg	4 3/4	1171	-618568.00	663696.00	93.2	Pass
		Diagonal	7/8	1204	25936.80	27059.40	95.9	Pass
		Horizontal	2L2 1/2x2 1/2x3/16	1201	-19512.50	66083.30	29.5	Pass
		Top Girt	2L2 1/2x2 1/2x3/16	1174	-19927.10	66083.30	30.2	Pass
T32	80 - 60	Leg	4 3/4	1210	-614306.00	663696.00	92.6	Pass
		Diagonal	1	1221	32232.40	35342.90	91.2	Pass
		Horizontal	2L2 1/2x2 1/2x3/16	1224	-24370.90	66083.30	36.9	Pass
		Top Girt	2L2 1/2x2 1/2x3/16	1214	-18706.00	66083.30	28.3	Pass
T33	60 - 40	Leg	4 3/4	1249	-574545.00	663696.00	86.6	Pass
		Diagonal	1 1/4	1260	43596.00	55223.30	78.9	Pass
		Horizontal	2L2 1/2x2 1/2x3/16	1263	-32520.90	66083.30	49.2	Pass
		Top Girt	2L2 1/2x2 1/2x3/16	1254	-26170.00	66083.30	39.6	Pass
T34	40 - 20	Leg	4 3/4	1290	-507855.00	663696.00	76.5	Pass
		Diagonal	1 1/4	1299	52133.60	55223.30	94.4	Pass
		Horizontal	2L2 1/2x2 1/2x3/16	1302	-39482.10	66083.30	59.7	Pass
		Top Girt	2L2 1/2x2 1/2x3/16	1293	-34434.40	66083.30	52.1	Pass
T35	20 - 10	Leg	4 3/4	1327	-389532.00	665738.00	81.6	Pass
		Diagonal	1 1/2	1338	66051.80	79521.60	83.1	Pass
		Horizontal	2L2 1/2x2 1/2x3/16	1341	-44207.10	66083.30	66.9	Pass
		Top Girt	2L2 1/2x2 1/2x3/16	1331	-40810.20	66083.30	61.8	Pass
T36	10 - 0	Leg	6	1348	-361438.00	1116090.00	96.6	Pass
		Diagonal	2L3 1/2x3 1/2x1/4	1359	-37731.30	128356.00	29.4	Pass
							61.5 (b)	
		Horizontal	2L3 1/2x3 1/2x1/4	1356	6745.54	105300.00	6.4	Pass
							10.7 (b)	
		Top Girt	2L4x4x5/16	1353	62473.00	146936.00	42.5	Pass
							68.9 (b)	

Section No.	Elevation ft	Component Type	Size	Critical Element	P lb	ϕP_{allow} lb	% Capacity	Pass Fail
							Summary	
							Leg (T15) 99.0	Pass
							Diagonal (T31) 95.9	Pass
							Horizontal (T8) 73.0	Pass
							Top Girt (T15) 72.9	Pass
							Guy A (T22) 91.1	Pass
							Guy B (T8) 92.3	Pass
							Guy C (T22) 92.0	Pass
							Top Guy Pull-Off (T8) 58.8	Pass
							Bolt Checks 93.9	Pass
							RATING = 99.0	**Pass**

GUYED TOWER SPREAD FOOTING DESIGN BY SABRE INDUSTRIES

697' 7200 STRG Corporacion de Puerto Rico Para la Difusion Public Cayey, PR (475187) 2023-02-01 KJT

Factored Axial Load (kips)	901.66		
Factored Shear (kips)	10.39		
Ultimate Bearing Pressure	3	Allowable Bearing Pressure (ksf)	1.50
Bearing Φs	0.6	Safety Factor	2.00
Bearing Design Strength (ksf)	1.8	Maximum Factored Net Soil Bearing Pressure (ksf)	1.79
Diameter of Pier (ft)	5	Equivalent Square b (ft)	4.43
Ht. of Pier Above Ground (ft)	2		
Depth to Bottom of Slab (ft)	13		
Ht. of Pier Below Ground (ft)	11		
Water Table Below Grade (ft)	999		
Width of Pad (ft)	25		
Thickness of Pad (ft)	2		
Quantity of Bars in Pad	32		
Bar Diameter in Pad (in)	1		
Area of Bars in Pad (in^2)	25.13		
Spacing of Bars in Pad (in)	9.45	Recommended Spacing (in)	6 to 12
Quantity of Bars Pier	20		
Bar Diameter in Pier (in)	1		
Area of Bars in Pier (in^2)	15.71	Minimum Pier Area of Steel (in^2)	14.14
Spacing of Bars in Pier (in)	8.21	Recommended Spacing (in)	6 to 12
f'c (ksi)	4.5		
fy (ksi)	60		
Unit Wt. of Soil (kcf)	0.12		
Unit Wt. of Concrete (kcf)	0.15		
Volume of Concrete (yd^3)	55.75		
Two-Way Shear Action:			
Average d (in)	20.00		
ϕV_c (kips)	1011.6	V_u (kips)	865.3
$\phi V_c = \phi(2 + 4/\beta_c)f'_c{}^{1/2}b_o d$	1517.4		
$\phi V_c = \phi(\alpha_s d/b_o+2)f'_c{}^{1/2}b_o d$	1310.8		
$\phi V_c = \phi\ 4f'_c{}^{1/2}b_o d$	1011.6		
Shear perimeter, b_o (in)	251.33		
β_c	1		
One-Way Shear:			
ϕV_c (kips)	603.7	V_u (kips)	346.0
Flexure:			
ϕM_n (ft-kips)	2187.6	M_u (ft-kips)	2146.6
a (in)	1.31		
Steel Ratio	0.00419		
β_1	0.83		
Maximum Steel Ratio	0.0197		
Minimum Steel Ratio	0.0018		
Rebar Development in Pad (in)	120.41	Required Development in Pad (in)	26.28

Condition	1 is OK, 0 Fails
Two-Way Shear Action	1
One-way Shear	1
Flexure	1
Steel Ratio	1
Pier Area of Steel	1
Maximum Soil Bearing Pressure	1
Length of Development in Pad	1

GUY ANCHOR BLOCK DESIGN BY SABRE INDUSTRIES

697' 7200 STRG Corporacion de Puerto Rico Para la Difusion Public Cayey, PR (475187) 2023-02-01 KJT

Anchor Block Dimensions:			
Length (ft)	30		
Height (ft)	5	Length/Height Ratio	6.0
Width (ft)	4	Length/Width Ratio	7.5
Longitudinal Bar Diameter (in)	1.27	Height/Width Ratio	1.25
Quantity of Bars in Top	9	Width/Height Ratio	0.80
Area of Bars in Top (in^2)	11.40	Vertical Flexure Ratio	0.42
Spacing of Bars in Top (in)	4.97	Horizontal Flexure Ratio	0.57
Quantity of Bars Front	11	Horizontal Force Ratio	0.94
Area of Bars in Front (in^2)	13.93	Vertical Force Ratio	0.99
Spacing of Bars in Front (in)	5.17		
Quantity of Bars in Bottom	3		
Spacing of Bars in Bottom (in)	19.87	Recommended Spacing (in)	5 to 30
Quantity of Bars in Back	3		
Spacing of Bars in Back (in)	25.87	Recommended Spacing (in)	5 to 30
Quantity of Ties	47		
Tie Bar Diameter (in)	0.5		
Factored Uplift (kips)	**309.31**	Angle from Horizontal (deg)	38
Factored Horizontal Force (kips)	**397.92**		
Ultimate Passive Pressure	**3.780**		
Horizontal Φs	**0.75**		
Horizontal Design Strength (ksf)	**2.835**		
Angle of Internal Friction (deg.)	**32**		
Unit Wt. of Soil (kcf)	**0.120**		
Water Table Below Grade (ft)	**999**		
Depth to Bottom of Block (ft)	**13**		
f'c (ksi)	4.5		
fy (ksi)	60		
Unit Wt. of Concrete (kcf)	0.15		
Volume of Concrete (yd^3)	22.22		
Horizontal Force:			
Factored Horizontal Force (kips)	397.9	Horizontal Design Strength (kips)	425.3
Uplift:			
Wc, Weight of Concrete (kips)	90.0		
W_R, Soil Resistance (kips)	310.4		
Uplift Φs (kips)	0.75		
$(\Phi s)(W_R+W_C)$ (kips)	313.8		
Factored Uplift (kips)	309.3	Uplift Design Strength (kips)	313.8
Vertical Shear:			
V_u (kips)	154.7	ϕV_n(kips)	398.3
$V_c = 2\ f'_c{}^{1/2} b_w d$ (kips)	359.8		
V_s (kips)	171.3	*** V_s max = $4\ f'_c{}^{1/2} b_w d$ (kips)	719.5
Spacing of Ties (in)	7.68		
Max. Spacing (in)	9.82	(Only if Shear Ties are Required)	

*** Ref. To Spacing Requirements ACI 11.5.4.3

GUY ANCHOR BLOCK DESIGN BY SABRE INDUSTRIES (CONTINUED)

697' 7200 STRG Corporacion de Puerto Rico Para la Difusion Public Cayey, PR (475187) 2023-02-01 KJT

Horizontal Shear

V_u (kips)	199.0	ϕV_n (kips)	365.7
$V_c = 2\ f'_c{}^{1/2} b_w d$ (kips)	353.1		
V_s (kips)	134.5	*** V_s max = $4\ f'_c{}^{1/2} b_w d$ (kips)	706.2
Spacing of Ties (in)	7.68		
Max. Spacing (in)	7.85	(Only if Shear Ties are Required)	
$(V_u/fV_n)_V+(Vu/fV_n)_H$	0.93		<1 OK

*** Ref. To Spacing Requirements ACI 11.5.4.3

Vertical Flexure:

M_u (ft-kips)	1159.9	ϕM_n (ft-kips)	2770.5
a (in)	3.73		
Steel Ratio	0.0043		
b_1	0.83		
Maximum Steel Ratio	0.0233		
Minimum Steel Ratio	0.0018		
Rebar Development (in)	177.00	Required Rebar Development (in)	14.38

Horizontal Flexure:

M_u (ft-kips)	1492.2	ϕM_n (ft-kips)	2636.3
a (in)	3.64		
Steel Ratio	0.0053		
Maximum Steel Ratio	0.023		
Minimum Steel Ratio	0.0018		
Rebar Development (in)	177.00	Required Rebar Development (in)	15.44
$(M_u/fM_n)_V+(Mu/fM_n)_H$	0.98	$(M_u/fM_n)_V+(Mu/\phi M_n)_H$	<1 OK

Condition	1 is OK, 0 Fails
Uplift Force	1
Horizontal Force	1
Flexure	1
Shear	1
Length of Development in Block	1
Steel Ratio	1

Calculated Strength > Factored Load O.K.