DISTRIBUTION ENGINEERING

STREET LIGHTING STANDARDS

TITLE:

ALUMINUM POLE MOUNTING
FOR 120 / 240 V, 125 W, LED LUMINAIRE
MAXIMUM VOLTAGE: 240 V

STANDARD NO.	STL-4 VERSION 4
DOCUMENT NO.	4401.007
PAGE	1 OF 4 DATE AUG 24, 2023
SUBMITTED	LUIS R. SOTO LIC. 11658
REVIEWED	IVETTE D. SANCHEZ LIC. 13837
APPROVED	RICARDO CASTRO LIC. 12135
DIGITIZED	EMILIO CUADRADO LIC. 3000

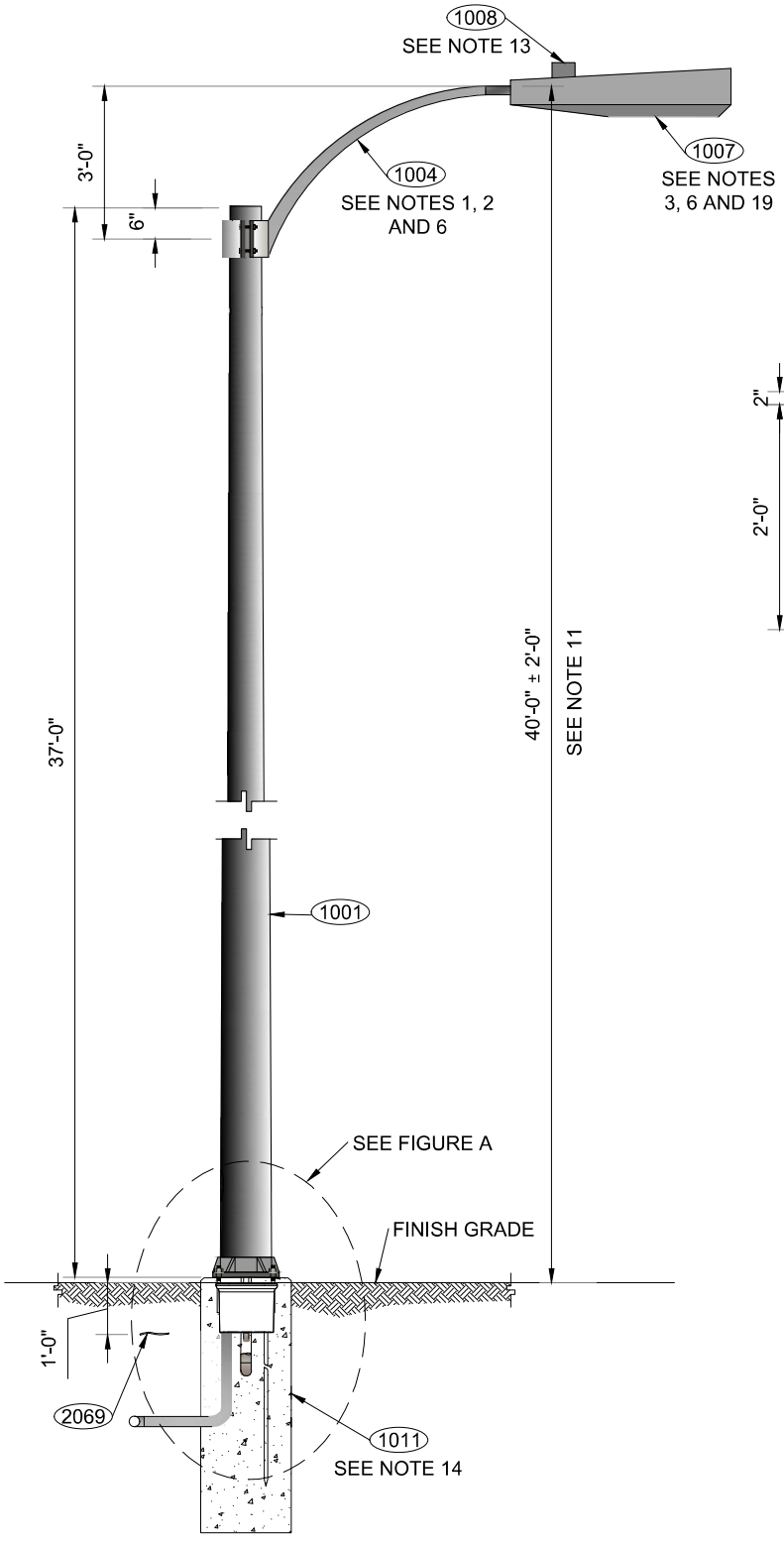

PROFILE VIEW

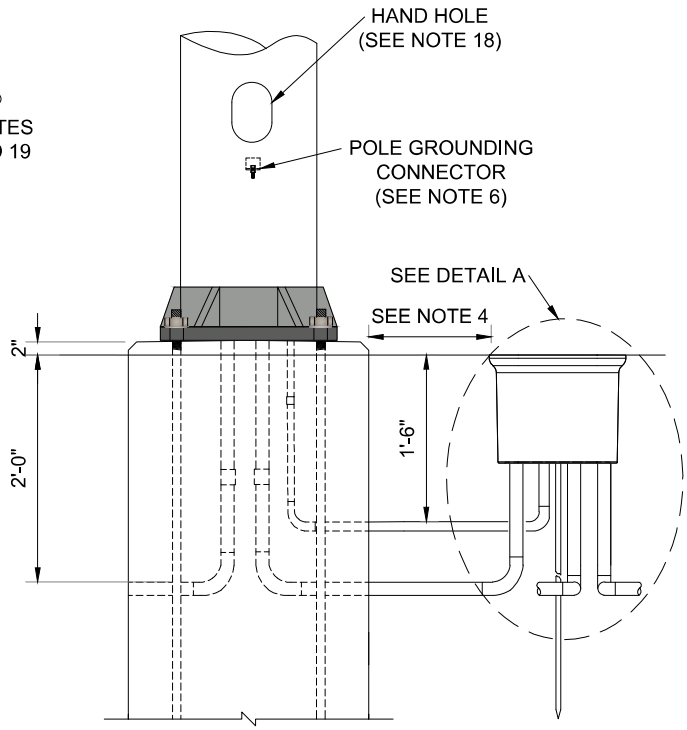

FIGURE A
UNDERGROUND CABLE ENTRY AT THE
CONCRETE BASE SUPPORT CABLE OPENING

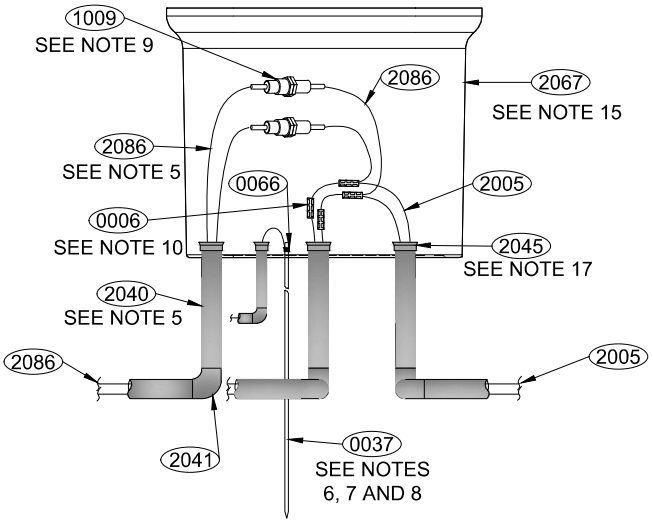

DETAIL A
LUMINAIRE FUSE CONNECTION

DISTRIBUTION ENGINEERING

STREET LIGHTING STANDARDS

TITLE:

ALUMINUM POLE MOUNTING
FOR 120 / 240 V, 125 W, LED LUMINAIRE
MAXIMUM VOLTAGE: 240 V

STANDARD NO. STL-4 VERSION 4
DOCUMENT NO. 4401.007
PAGE 2 OF 4 DATE AUG 24, 2023

SUBMITTED LUIS R. SOTO LIC. 11658
REVIEWED IVETTE D. SANCHEZ LIC. 13837
APPROVED RICARDO CASTRO LIC. 12135
DIGITIZED EMILIO CUADRADO LIC. 3000

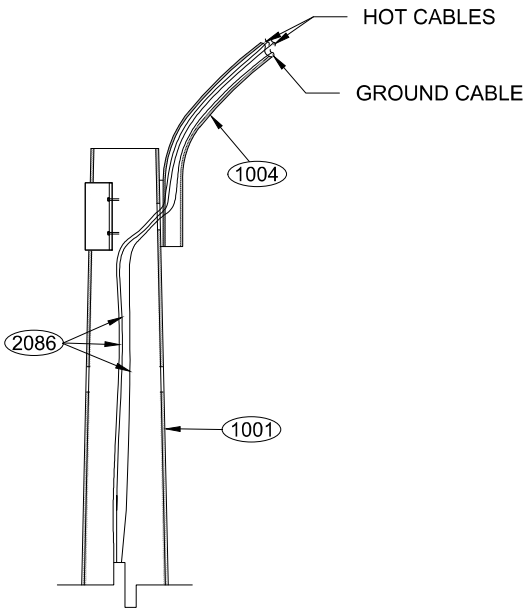

DETAIL B
ARM CONNECTION FOR SINGLE INSTALLATION

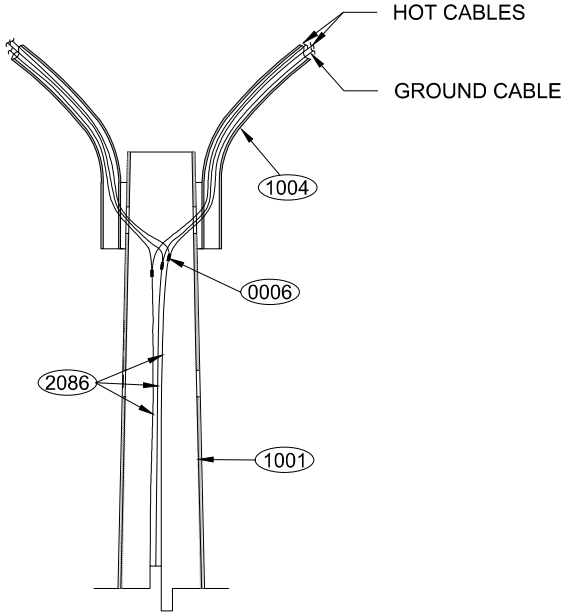

DETAIL C
ARM CONNECTION FOR DOUBLE INSTALLATION

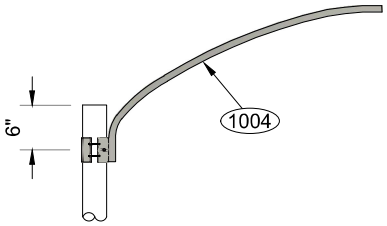

DETAIL D
4' AND 8' LONG SINGLE ARM
SINGLE INSTALLATION

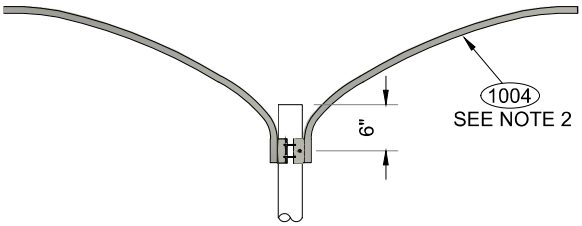

DETAIL E
4' AND 8' LONG SINGLE ARM
DOUBLE INSTALLATION

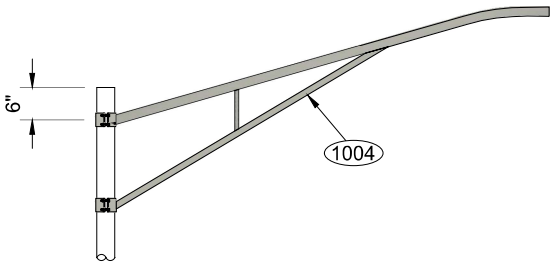

DETAIL F
12' AND 15' LONG TRUSS
ARM SINGLE INSTALLATION

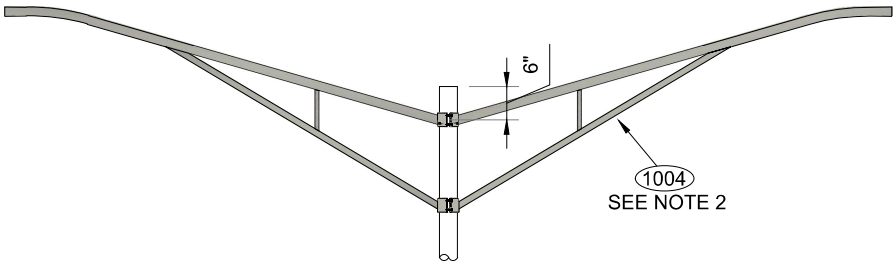

DETAIL G
12' AND 15' LONG TRUSS
ARM DOUBLE INSTALLATION

DISTRIBUTION ENGINEERING

STREET LIGHTING STANDARDS

TITLE:

ALUMINUM POLE MOUNTING
FOR 120 / 240 V, 125 W, LED LUMINAIRE
MAXIMUM VOLTAGE: 240 V
NOTES

STANDARD NO. STL-4 VERSION 4
DOCUMENT NO. 4401.007
PAGE 3 OF 4 DATE AUG 24, 2023
SUBMITTED LUIS R. SOTO LIC. 11658
REVIEWED IVETTE D. SANCHEZ LIC. 13837
APPROVED RICARDO CASTRO LIC. 12135
DIGITIZED EMILIO CUADRADO LIC. 3000

NOTES:

1. ARMS FOR LED LUMINAIRES IN ALUMINUM POLES (ITEM 1004) CAN BE 4' OR 8' LONG SINGLE ARM OR 12' OR 15' LONG TRUSS ARM.
2. FOR DOUBLE ARMS INSTALLATION, LED LUMINAIRES SHALL BE CONNECTED THROUGH THE ARMS AT THE TOP OF THE POLE USING COMPRESSION CONNECTORS (ITEM 0006). REFER TO DETAIL C.
3. LED LUMINAIRES SHALL BE CONNECTED TO 240 V CIRCUIT, 125 W.
4. SERVICE PEDESTAL (ITEM 2067) SHALL BE INSTALLED BETWEEN 1' TO 2' FROM POLE CONCRETE BASE IN THE PLANTING AREA. IT SHALL BE INSTALLED FLUSH WITH THE FINISH GRADE.
5. FOR STREET LIGHTING CIRCUITS, A PVC SCH-40 DUCT (ITEM 2040) WITH MINIMUM DIAMETER OF ¾" WILL BE USED FOR #12 AWG CABLES, AND 2" DIAMETER PVC SCH-40 DUCT FOR CABLES OF GAUGE NOT LARGER THAN 4/0 AWG. PVC SCH-40 DUCT FOR STREET LIGHTING CIRCUITS SHALL BE INSTALLED 24" DEEP. HAZARD WARNING TAPE (ITEM 2069) SHALL BE INSTALLED 12" BELOW THE FINISH GRADE. DUCT FOR GROUNDING CABLE SHALL BE 18" DEEP.
6. GROUND ROD SHALL BE ON THE SERVICE PEDESTAL IN EACH STREET LIGHTING POLE. ENSURE GROUND CONNECTION AT SERVICE PEDESTAL, ALUMINUM POLE, ARM FOR LED LUMINAIRE AND LED LUMINAIRE.
7. STRUCTURE'S FOOTING RESISTANCE TO GROUND SHALL BE BETWEEN 5 AND 10 OHMS OR LESS. USE ADDITIONAL RODS AS NECESSARY WITH THE DESIGNING ENGINEER GUIDANCE.
8. GROUND RODS WITH A MINIMUM LENGTH OF 8' SHALL BE USED FOR THE GROUNDING SYSTEM. TWO OR MORE SECTIONS OF 4' LONG GROUND RODS JOINED TOGETHER CAN ALSO BE USED.
9. EACH LIGHTING POLE SHALL BE FUSED WITH A 10 A MIDGET TYPE FUSE ON THE NEAREST SERVICE PEDESTAL. MIDGET FUSE HOLDER MAXIMUM RATING SHALL BE 30 A.
10. COMPRESSION CONNECTORS SHALL BE COVERED WITH A FEW LAYERS OF VINYL INSULATING TAPE (ITEM 0077).
11. LED LUMINARIES SHALL BE INSTALLED AT 38' TO 42' MOUNTING HEIGHT FROM FINAL STREET LEVEL.
12. INSTALLATION OF WIRELESS CAMERAS OR ANTENNAS IS ALLOWED ON STREET LIGHTING POLES. THIS EQUIPMENT CONNECTION SHALL BE TO THE 240 V CIRCUIT. THEY SHALL BE INTERCONNECTED FROM THE NEAREST STREET LIGHTING SERVICE PEDESTAL OR PAD MOUNTED TRANSFORMER AVAILABLE. AN EXPOSED RISER SHALL BE INSTALLED USING A PVC SCH-80 DUCT, ATTACHED TO THE POLE WITH STAINLESS STAINLESS STEEL FIXING BANDS. DRILLING HOLES IS NOT ALLOWED. AN INDEPENDENT FUSE CIRCUIT PROTECTION SHALL BE INSTALLED FOR EACH EQUIPMENT. THIS EQUIPMENT SHALL BE INSTALLED 42" MINIMUM BELOW THE ARM FOR LED LUMINAIRE.
13. FOR LIGHTING CIRCUITS IN MAIN ROADS OR HIGHWAYS, A LUMINAIRES CONTROLLER (ITEM 1012) IS REQUIRED. USE OF A SHORTING CAP (ITEM 1010) ON EACH LED LUMINAIRE TO PROVIDE POWER. IN CASES WHEN A LUMINAIRES CONTROLLER IS NOT INSTALLED A PHOTO CONTROL (ITEM 1008), FACING NORTH, IS REQUIRED IN EACH LED LUMINAIRE. FOR DETAILED INSTALLATION, REFER TO STANDARD NO. STL-14.
14. ALUMINUM POLE CONCRETE BASE SUPPORT (ITEM 1011) SHALL BE INSTALLED 7'-4" DEEP, LEVELED. IT IS REQUIRED TO LEAVE 2" OVER THE FINISH GRADE. FOR INSTALLATION OF THE CONCRETE BASE:
    A. LEVEL AND COMPACT EVENLY THE EXCAVATION BOTTOM.
    B. FILL 6" WITH #67 CRUSHED STONE OR GRAVEL (ITEM 2050) AND LEVEL IT.
    C. INSTALL THE CONCRETE BASE SUPPORT AND LEVEL IT.
    D. THE EXCAVATION SHALL BE FILLED WITH SATURATED CLEAN SAND.
15. EXCAVATION SHALL BE APPROXIMATELY 6" DEEPER THAN THE DEPTH OF THE SERVICE PEDESTAL. #67 CLEAN CRUSHED STONE OR GRAVEL WITH A MINIMUM THICKNESS OF 6" SHALL BE PLACED FOR DRAINAGE. THIS MATERIAL SHALL BE UNIFORMLY GRADED AND SIZED FROM ¾" DOWN TO FINE PARTICLES. IT SHALL BE FREE FROM SOFT AND DISINTEGRATED PIECES, CLAY, ORGANIC OR OTHER DELETERIOUS MATTER. THE PEDESTAL SHALL BE INSTALLED ENSURING THAT THE TOP COVER IS AT FINISH GRADE. IT SHALL BE FILLED WITH SOIL AROUND THE SERVICE PEDESTAL AND COMPACTED.
16. AFTER INSTALLATION OF ALL CABLES IS COMPLETED, DUCTS SHALL BE SEALED WITH A DUCT SEALING COMPOUND (ITEM 2014).
17. DUCTS SHALL HAVE A PVC END BELL (ITEM 2045) TO PROVIDE A SMOOTH SAFE CABLE ENTRY.
18. HAND HOLE OPENING MUST FACE THE OPPOSITE SIDE TO TRANSIT.
19. FOR STREET LIGHTING CIRCUITS CONDUIT TRENCH CONSTRUCTION DETAIL, REFER TO STANDARD NO. STL-16.

DISTRIBUTION ENGINEERING

STREET LIGHTING STANDARDS

TITLE:

ALUMINUM POLE MOUNTING
FOR 120 / 240 V, 125 W, LED LUMINAIRE
MAXIMUM VOLTAGE: 240 V
BILL OF MATERIAL

STANDARD NO. STL-4 VERSION 4
DOCUMENT NO. 4401.007
PAGE 4 OF 4 DATE AUG 24, 2023
SUBMITTED LUIS R. SOTO LIC. 11658
REVIEWED IVETTE D. SANCHEZ LIC. 13837
APPROVED RICARDO CASTRO LIC. 12135
DIGITIZED EMILIO CUADRADO LIC. 3000

MATERIALS			
NO.	GENERAL DESCRIPTION	WAREHOUSE ITEM	QTY.
0006	COMPRESSION SPLICES AND CONNECTORS	VARIES	AS REQ.
0037	5/8" GROUND ROD	VARIES	AS REQ.
0066	CONNECTOR FOR 5/8" GROUND ROD	002-13595	1
0077	VINYL INSULATING TAPE	VARIES	AS REQ.
1001	ALUMINUM POLE	026-00609	1
1004	ARM FOR LED LUMINAIRE IN ALUMINUM POLE	VARIES	AS REQ.
1007	LED LUMINAIRE	028-78110	AS REQ.
1008	PHOTO CONTROL	030-78111	AS REQ.
1009	MIDGET FUSE HOLDER	038-00729	2
1010	SHORTING CAP	030-80074	AS REQ.
1011	ALUMINUM POLE CONCRETE BASE SUPPORT	026-84237	1
1012	LUMINAIRES CONTROLLER	030-82824	AS REQ.
2005	STRANDED COPPER CABLE, 600 V, XHHW-2	VARIES	AS REQ.
2014	DUCT SEALING COMPOUND	003-02935	AS REQ.
2040	PVC SCH-40 DUCT	VARIES	AS REQ.
2041	90° PVC ELBOW	VARIES	AS REQ.
2043	PVC COUPLING	VARIES	AS REQ.
2045	PVC END BELL	VARIES	AS REQ.
2050	#67 CRUSHED STONE OR GRAVEL	038-83208	AS REQ.
2067	12" X 12" SERVICE PEDESTAL	038-01984	1
2069	HAZARD WARNING TAPE	072-83464	AS REQ.
2086	STRANDED COPPER CABLE, 600 V, THHN / THWN-2	VARIES	AS REQ.