Document Title: **Concrete Drilled Shafts to Support Aluminum Streetlight 40 ft. Poles**		
Document Type: **Material Specification**	Document No.: **4402.035**	
Originating Department: **Distribution Standards & Materials**	Version: **3**	Effective Date: May 26, 2023

Author Rosalía Alverio González Technical Specialist 3, Distribution Standards & Materials	Signature and Date May 26, 2023
Reviewer Rafael Torres Martinez PE Supervisor, Distribution Standards & Materials	Signature and Date May 26, 2023
Approver Ricardo Castro PE Manager, Distribution Standards & Materials	Signature and Date May 26, 2023

Document History

Date	Revision Comments
February 9, 2023	Initial Release
April 10, 2023	Drawing Modification and Section 9
April 14, 2023	Drawing Modification
May 25, 2023	Drawing Modification and Sections

Warehouse Catalog	Item Version	Date
026-84237	4	5/25/2023

Material Specification
Document No.: 4402.035
Item No.: 026-84237
Asset Suite: 84237
Originating Department: Distribution Engineering



Concrete Drilled Shafts to Support Aluminum Streetlight 40 ft. Poles

1. Introduction

This is a general specification that covers the minimum requirements for concrete drilled shafts to be used in the distribution system in Puerto Rico. Further information will be provided by LUMA Energy at the time of order placement and will provide information on site specific conditions, quantity, and other requirements. This document includes the general electrical and mechanical characteristics of the material.

2. Special Requirements

Samples shall be furnished as requested by LUMA Energy. Vendors that have supplied this material to LUMA on previous orders, will not have to furnish samples at bid opening. The material will be received at the LUMA's general warehouse (011) at Palo Seco, Puerto Rico. Shipping will include transportation and unloading at the indicated warehouse.

3. Quantity/Literature

Descriptive and technical literature must be supplied by vendor at time of bidding. This literature may include, but is not limited to details of material, drawings, documented testing, and instructions for use and installation. Failure to submit documents on time will cause bidder disqualification. For products described in this specification as requiring qualification, awards will be made only for such products that, prior to the time for opening of bids, had been tested and/or approved by LUMA. Evidence of PREPA's and/or LUMA Energy's approval of the equipment or material shall be supplied by vendor if requested by LUMA Energy.

4. Markings

4.1. Containers shall be marked outside with LUMA Energy's purchase order and item number.

4.2. Packaging labels and tags shall be waterproof.

5. Suggested Manufacturer

5.1. Precast Product Corp./Power Poles Inc.

5.2. Moca Concrete Poles.

6. Packaging

All material and equipment shall be packaged and marked in such a way as to facilitate handling and protection from damage and that the receiving warehouse can readily identify it and send it, in one complete unit, to a field location without opening crates or boxes to sort items and/or parts.

7. Number Per Package (Logistics)

Each manufacturer shall define the number of concretes drilled shafts per packages depending on the shipping containers and platforms for delivery or as requested by LUMA.

8. Acceptance Criteria

8.1. Test required: certified by external qualified laboratories.

8.2. Latest applicable codes, standards, and other regulations:

a. ACI American Concrete Institute
b. ANSI American National Standards Institute
c. ASCE American Society of Civil Engineers
d. ASTM American Society for Testing and Materials
e. AWS American Welding Society
f. NESC National Electrical Safety Code
g. IEEE Institute of Electrical and Electronic Engineers
h. PCI Prestressed Concrete Institute

9. Description

This specification is for the purpose of the concrete drilled shafts the electrical distribution system. Drilled concrete shafts shall be 7 ft.-6 in long x 2 ft. diameter as per drawing.

a. **Anchor rod**: 1 in. dia. x 48 in. long anchor rod with hex nut, lockwasher and flatewasher (4 of each required), anchor rod to be 55,000 psi min. yield strength per ASTM F1554, Grade 55, top 12 in. (min.). Top 12 in. (min.) of rod to be galvanized per ASTM A153.

10. Material

Main structure concrete shall be in accordance to American Society for Testing and Material (ASTM), and other Standards and regulations. All material used to fabricate the structure in this specification shall be properly certified by the manufacturers.

11. Drawings

11.1 Drawing for the bid proposal at PDF format shall include with the following information:

a. General dimensions of all the structural components.

b. Weight for each concrete drilled shafts.

c. A bill of materials.

d. Details of all accessories.

12. Final Approval before Manufacture

After approval, a set of drawings and design calculations at PDF format plus a digital drawing in 2D and 3D (if available) AutoCAD (.DWG) shall be sent for our files. All drawings shall include our purchase order number.

13. Failure to Meet Guarantees

Should any piece of equipment fail to meet the guarantees and the requirements of these specifications within the time covered by the guarantee, it shall be optional to the Engineer to accept the manhole or reject it and direct the manufacturer to at once proceed to make alterations or furnish such new parts as may be necessary to make it meet the guarantees and requirements. All expense of furnishing and installing new parts by failure of the manhole to meet the guarantees and other requirements of the specifications will be manufacturer's responsibility.

14. Delivery of material:

a. The distribution concrete drilled shafts will be delivered at the LUMA General Warehouse in Palo Seco (011), Puerto Rico, unless otherwise indicated and coordinated in another area provided by the company.

b. LUMA may take delivery at a designated location with the delivering carrier's equipment. The manufacturer shall coordinate with LUMA to ensure a smooth and efficient delivery of the concrete drilled shaft.

c. LUMA shall provide all labor, equipment, and materials for unloading the concrete drilled shafts at the project site. A concrete drilled shafts is considered delivered when it is lifted from the delivery carrier's trailer or semi-trailer.

15. Concrete Mixes

15.1. Concrete Mixes Concrete mixes shall be proportioned to produce the strength, durability and workability required by the approved mix design. The manufacturer shall submit his proposed mix designs to LUMA for approval at least six weeks before manufacturer is due to commence. LUMA may direct the manufacturer to undertake trial mixes and strength, durability, and workability tests to prove that the proposed mixes are acceptable. Such trial mixes and tests shall be carried out prior to placement of concrete in the works and their costs shall be borne by the manufacturer. Unless otherwise specified or approved by LUMA, concrete shall have the following properties:

a. Maximum Water Cement Ratio by Weight: 0.40

b. The minimum characteristic compressive strength for Prestressed F'c at 28 days shall be equal to all bases 4,000 psi.

15.2. The manufacturer shall keep at the mixing site, records showing for each batch of concrete produced, the time and date of water addition, the weight of cement, weight of each grade of aggregate, weight of added water, results of tests made to determine the water contained in the aggregate, the results of any strength tests and the location of concrete in the works. These records shall be made available to LUMA.

15.3. The proportions of aggregate and cement for any concrete shall be such as to produce a mix which will work readily into corners and angles of the forms and around tendons and reinforcement with the method of placing employed on the work, but without permitting the materials to segregate or water to collect on the surface.

15.4. Water shall be accurately measured by a calibrated tank or by an approved type of calibrated water meter attached to the mixer. Certification of water meter calibration shall be supplied to LUMA upon request.

15.5. Mixing shall be by an efficient type of batch mixer operated at the speeds recommended by the manufacturer with particular regard to the use of low slump concrete. All concrete shall be mixed for a period of not less than 2 minutes after all materials including water are placed in the mixer.

15.6. No concrete that has reached its initial set (partially hardened) or that has left the mixer or agitator for more than 30 minutes shall be placed in the structure. Remixing shall not be permitted.

15.7. Ready-mixed concrete complying with ASTM C94 - Ready Mixed Concrete and the requirements of this Specification, whether manufactured in a plant operated by the manufacturer or approved Subcontractors, may be used.

16. Formwork

16.1. All forms shall be built mortar-tight, of sufficient rigidity and adequately supported to prevent distortion or displacement due to the pressure of the concrete and other loads incidental to the construction operations. Forms shall be constructed and maintained to prevent warping and the opening of joints due to shrinkage of the timber.

16.2. Forms shall be built with provision for easy inspection and cleaning out immediately before concrete is placed.

16.3. A high standard of finish is required, and surfaces of precast, spun, and prestressed concrete members shall be true, hard, smooth, and free from any defects due to leakage of mortar from the molds.

16.4. Molds should preferably be made of steel.

16.5. Every care shall be taken to ensure that no marks or fins appear on the finished surface.

16.6. The inside of forms shall be thoroughly wetted or coated with non-staining form release oil or other approved material. Where oil or surfacing material is used, it shall be applied before the reinforcement is placed.

16.7. When forms have become warped, damaged, or burred so that in the opinion of the Superintendent the surface or dimensional tolerances of the concrete will not be satisfactory, the manufacturer shall, when so directed by LUMA, remove such forms, and replace them with forms or form panels satisfactory in all respects.

16.8. Forms shall be removed so as not to damage the concrete.

17. Placing of Reinforcement

17.1. Steel shall be free from all loose rust, grease, tar, paint, oil, mud, mill scale or other coating which would tend to destroy its bond with the concrete. All reinforcing bars shall be bent as shown on the Drawings and shall be placed accurately and be well secured by tie wiring or welding were permitted so that no displacement can occur during placing of concrete. The specified clear cover shall be maintained. Tie wire of at least 18 s.w.g. soft iron wire shall be bent inwards or cut off.

17.2. Care shall be taken to ensure that the cage is correctly aligned and positioned in relation to the through-bolt holes, ferrules, and the pole axis, and that the cage reinforcement is not spirally deformed or displaced.

17.3. Bending and splicing of reinforcing shall be carried out as required by ASTM. Splices shall be of length sufficient to fully develop the capacity of the bars.

18. English System Unit

The English System Units shall be used on all calculations and drawings. Metric Units or other systems shall not be accepted in the evaluation and award of a bid.

19. Inspection

The acceptance of any material or equipment shall in no way relieve the vendor from his responsibility to meet all the requirements of this specification, and it would not prevent subsequent rejection if such materials were found later to be defective.

20. Proposal Information

20.1. Submitted proposals must include:

a. Technical information

b. Table of Compliance completed by the bidder with reference. (See Appendix 1)

— End of Specification —

APENDICES

Concrete Drilled Shafts to Support Aluminum Streetlight 40 ft. Poles

Appendix 1: Table of Compliance

Line	Criteria	Description	Pass/Fail (P/F)	Comments
1	Specification	The Proponent complies with the corresponding specification document.		
2	Industry Standards	The Proponent complies with the industry standards established in the specification document.		
3	Concrete Drilled Shafts	7 ft.-6 in. long x 2 ft. diameter		
4	Minimum characteristic compressive strength for Prestressed F'c at 28 days	4,000 psi.		
5	Anchor Rod	1 in. dia x 48 in. long anchor rod with hex nut. (See Section (9-a)		

DISTRIBUTION ENGINEERING

STREET LIGHTING

MATERIAL SPECIFICATION

TITLE:

BASIC STEEL REINFORCEMENT LAYOUT FOR CONCRETE DRILLED SHAFTS TO SUPPORT ALUMINUM POLES

DOCUMENT NO. 4402.035 VERSION 4

PAGE 1 OF 1 DATE MAY 25, 2023

SUBMITTED ROSALIA ALVERIO GONZALEZ

REVIEWED RAFAEL TORRES LIC. 14593

APPROVED RICARDO CASTRO LIC. 12135

DIGITIZED EMILIO CUADRADO LIC. 3000

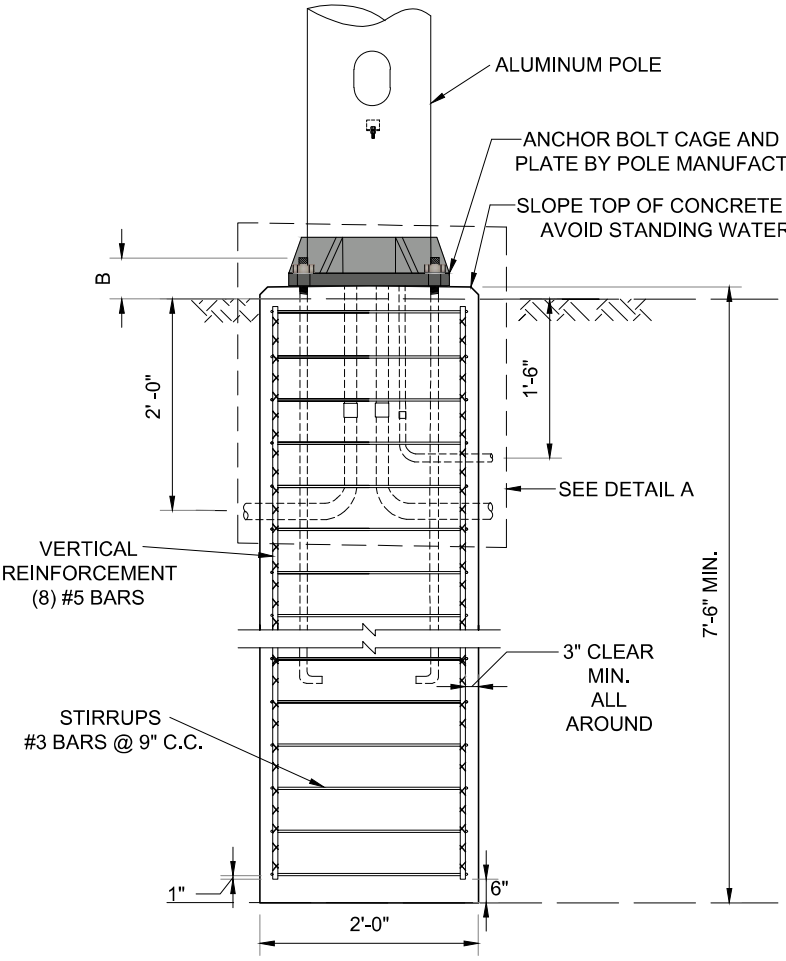

ELEVATION VIEW
CONCRETE BASE

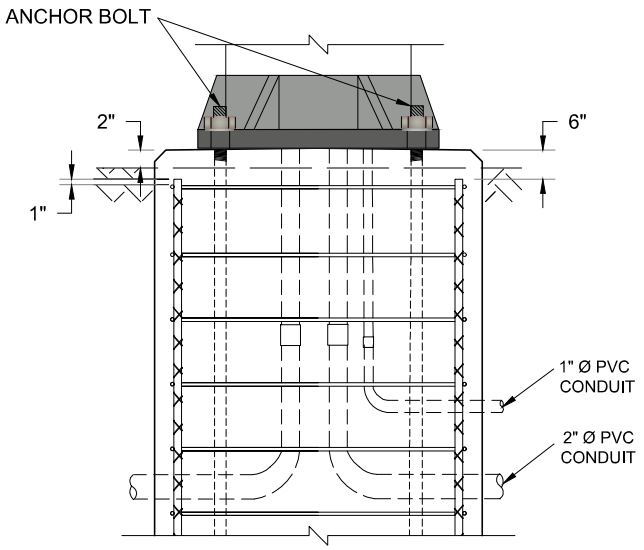

DETAIL A

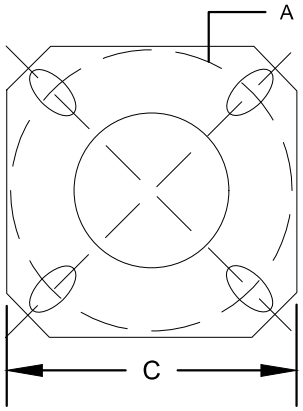

DETAIL B

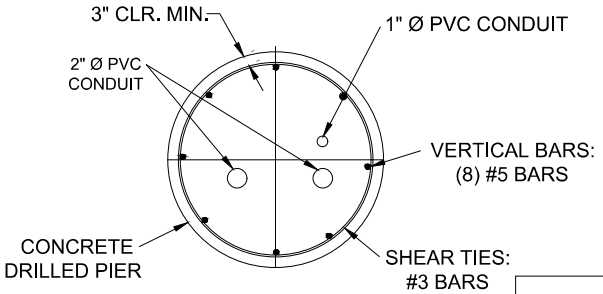

TOP VIEW

fc = 4,500 psi
fy = 60,000 psi

BASE DATA				
DESCRIPTION	BOLT CIRCLE A	BOLT PROJECTION B	BASE SQUARE C	CONDUIT PROJECTION
37' ALUMINUM POLE	15"	3.75" - 4.50"	15"	6"

4402.035 Concrete Drilled Shafts to Support Aluminum Streetlight Poles-40 ft Poles (5-25-2023)

Final Audit Report 2023-05-26

Created:	2023-05-26
By:	Rosalia Alverio (rosalia.alverio@lumapr.com)
Status:	Signed
Transaction ID:	CBJCHBCAABAAwjWoe9UTLKX38F9Xw84kWfQ9J4UeQhc_

"4402.035 Concrete Drilled Shafts to Support Aluminum Streetlight Poles-40 ft Poles (5-25-2023)" History

Document created by Rosalia Alverio (rosalia.alverio@lumapr.com)
2023-05-26 - 2:00:47 PM GMT

Document e-signed by Rosalia Alverio (rosalia.alverio@lumapr.com)
Signature Date: 2023-05-26 - 2:17:20 PM GMT - Time Source: server

Document emailed to Rafael Torres-Martinez (rafael.torresm@lumapr.com) for signature
2023-05-26 - 2:17:22 PM GMT

Email viewed by Rafael Torres-Martinez (rafael.torresm@lumapr.com)
2023-05-26 - 3:32:46 PM GMT

Document e-signed by Rafael Torres-Martinez (rafael.torresm@lumapr.com)
Signature Date: 2023-05-26 - 3:35:39 PM GMT - Time Source: server

Document emailed to ricardo.castro@lumapr.com for signature
2023-05-26 - 3:35:41 PM GMT

Email viewed by ricardo.castro@lumapr.com
2023-05-26 - 3:36:01 PM GMT

Signer ricardo.castro@lumapr.com entered name at signing as Ricardo Castro Gómez
2023-05-26 - 3:36:37 PM GMT

Document e-signed by Ricardo Castro Gómez (ricardo.castro@lumapr.com)
Signature Date: 2023-05-26 - 3:36:39 PM GMT - Time Source: server

Adobe Acrobat Sign

Agreement completed.

2023-05-26 - 3:36:39 PM GMT

Adobe Acrobat Sign