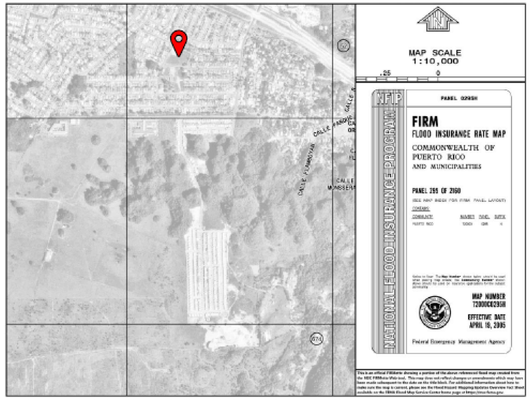

FLOOD MAP

SCALE: NOT TO SCALE

MAP NUMBER: 72000C0295H
EFFECTIVE DATE: APRIL 19, 2005
FLOOD ZONE: X

DRD
DEPARTAMENTO DE RECREACIÓN Y DEPORTES

URB EL ROSARIO, VEGA BAJA

18°26'02.8"N 66°23'39.8"W

18.434100, -66.394400

- A — LAT. 18.435554, LONG. -66.394473
- B — LAT. 18.433512, LONG. -66.395105
- C — LAT 18.435194, LONG. -66.393621
- D — LAT. 18.433474 LONG. -66.394027

COORDINATES MAP

SCALE: NOT TO SCALE

EXHIBIT A - FOUR CORNERS COORDINATES



DRD
DEPARTAMENTO DE RECREACIÓN Y DEPORTES

URB EL ROSARIO, VEGA BAJA

18°26'02.8"N 66°23'39.8"W

18.434100, -66.394400

No disturbed areas, waterways or wetlands.

LOCATION MAP

SCALE: NOT TO SCALE

EXHIBIT B – VICINITY MAP

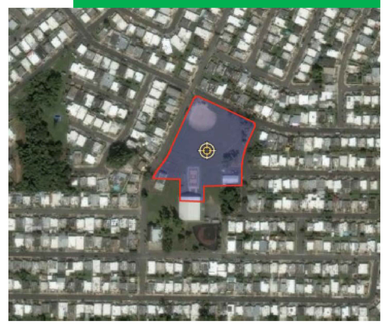

DRD
DEPARTAMENTO DE RECREACIÓN Y DEPORTES

URB EL ROSARIO, VEGA BAJA

18°26'02.8"N 66°23'39.8"W

18.434100, -66.394400

Existing footprint will remain.

EXHIBIT C – PROPOSED FOOTPRINT



FEMA PA CODE: (000-UFXSJ-00)
PROJECT NUMBER: 87524
PW NUMBER: 1863
DAMAGE INVENTORY NUMBER: 253943
DR NUMBER: 4339

URB EL ROSARIO FACILITY REPAIR, VEGA BAJA, PR

BASEBALL FIELD SITE

CALLE 3
VEGA BAJA, PUERTO RICO

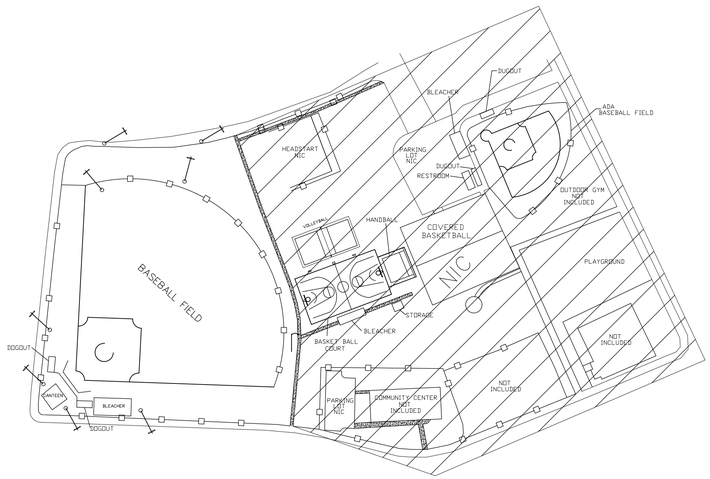

SITE PLAN

NOT TO SCALE

SHEET INDEX

SHEET	NAME	DESCRIPTION
1	T-01	TITLE
2	SI-01	SITE PLAN
3	A-01	PROPOSED SCOPE OF WORK
4	A-02	SIGN DETAILS AND NOTES
5	A-03	PROPOSED CHAIN LINK FENCE DETAILS
6	A-04	PROPOSED DETAILS
7	S-01	PROPOSED STRUCTURAL DETAILS
8	E-01	PROPOSED ELECTRICAL SITE PLAN
9	E-02	PROPOSED LIGHTINGS AND NOTES

ON KEY LLC

IMPORTANT NOTICE:

ALL DESIGNS, DRAWINGS AND COPIES ISSUED BY B. QUINONES, ARE PROPERTY OF B. QUINONES, AND CANNOT BE REPRODUCED OR EXHIBITED IN ANY MANNER, FOR ANY REASON, EXCEPT FOR THE PURPOSE OF ITS DESIGN, WITHOUT OR BY WRITTEN CONSENT OF B. QUINONES. IF FOR ANY REASON, PART OR ALL OF THE B. QUINONES DESIGN IS ISSUED OR BUILT WITHOUT B.QUINONES CONSENT, THE PARTIES INVOLVED SHALL PAY B. QUINONES FEE IN FULL.

Project Name and Address:
Urb El Rosario
Facility Damage Repair
Calle 3
Vega Baja, Puerto Rico

Client Name and Address:
DEPARTAMENTO DE RECREACION Y DEPORTES DE PR
PO Box 9023207 San Juan
PR 00902-3207
Tel. (787) 721-2800 Fax: (787) 268-1845
www.drd.pr.gov

Design by: B. QUINONES

No.	Revision/Issue	Plot Date:

Brendaly Quiñones Villodas
Ingeniero Licenciado
Lic. 17715 PE
Puerto Rico
Fecha de Expiración: 2026-06-19
HARD COPY SIGNATURE AND SEAL
ENG. BRENDALY QUINONES Lic. # 17715

DRD
DEPARTAMENTO DE RECREACIÓN Y DEPORTES

PO Box 9023207
San Juan PR
00902-3207

In this Page:

TITLE SHEET

Scale:

Details scale: AS NOTED

Job #: 2023-000123
Date: MAR 12, 2024
Check by: AUG 19, 2024

Sheet No.
T-01



LOCATION PLAN

NOT TO SCALE



SITE PLAN

NOT TO SCALE

GENERAL NOTES

NOTES:

1- In activities that backfill is required the contractor must use A-2-4 or similar compacted in layers of 6" inches thickness at 95% and been verified by laboratory tests, which will be paid by the contractor.

2. All document included in this bidding process are part of the contract.

3. The contractor shall connect the structure to the existing water and sewer connection services of the site if it where not connected.

4. Demolition and construction disposal will be contractor's responsibility.

5. The contractor will be responsible to implement Plan CEST, PFE (Permiso de Fuente de Emision) and DS3 (Desperdicios Solidos no Peligrosos) as required by the Junta de Calidad Ambiental. (If required)

6. The contractor shall maintained the site clean and free of debris during work in progress.

7. A boundary shall be identified on field to isolated the construction area from the areas that are not impacted. The limit will be defined using a temporary fence that must be provided by the contractor.

8. The contractor will be responsible for all the demolition and debris disposal during the construction. Everything must be coordinated with the Consultant including any foundation demolition if it where the case.

9. "The contractor will plant Soisa Meyer grass in tight squares in all the Green areas affected by the construction.

10. All site dimensions must be verified on site by the contractor.

11. The contractor shall be responsible for any damage cause by the contractor or his employee to the existing infrastructure on the field.

12. All sidewalks finishes shall be broom finish.

13. The contractor shall be familiarized with the existing site conditions before the bidding.

14. The construction site perimeter will be protected with a temporary fence.

15. The contractor will submit a work plan in addition to the cost breakdown for payment for owner's Consultant approval.

16. If applicable any slopes that are generated on the site will not have a slope greater than 1:1 and shall be duly stabilized with Jute or a Similar approved geotextile product and Soysa Meyer grass will be tightly installed for permanent stabilization.

17. The contractor Will familiarize himself with the included Electrical and structural notes and specifications where applicable.

Buy American Act Requirements:

Buy American requirements apply to purchases of iron, steel, and other manufactured products permanently incorporated into infrastructure projects. To be considered as being produced in the U.S., goods must be manufactured in the U.S. and at least 50% of the cost of their components must come from the U.S.

Additional Notes:

1) The contractor is responsible to verify the existing electrical system conditions and shall repair any damage found and leave the project fully operational, properly grounded, coordinated with all the other trades and with all the required equipment, interconnections, fittings, and appurtenances necessary for the safe operation of his intended use.

2) All the electrical installation shall be done in a neat and workmanlike manner, according to the latest edition of the National Electrical Code (N.E.C.), the Puerto Rico Electric Power Authority (LUMA) latest standards and the Negociado de Telecomunicaciones de Puerto Rico latest practices.

3) The contractor shall visit the job site and become acquainted with the existing field conditions.

4) The contractor shall submit with the proposal, the proposed Synthetic Acrylic System specifications with the warranty terms and conditions. The system must be equal or similar to the specified and shall comply with a minimum of minimum five (5) year warranty, excluding damages by improper use and wear due to normal use.

5) The contractor is responsible to comply with all laws, regulations, codes, professional licenses required by Municipal, State, Federal and Local laws.

6) To all existing concrete surface (where occur) – All spalling concrete must be repaired. Chip the existing loose concrete and treat the exposed rebar. Clean with a steel brush and apply (equal or similar) Loctite Extend Rust Neutralizer, apply (equal or similar) Sika Armatec – 110 EpoCem and then patch and finish the affected area with Vinyl Concrete Patch. For all product, follow the manufacturer mixing and application recommendations.

7) All basketball court marking paint must be Multisport Court (Basketball and Volleyball) as specified. Where volleyball pole system is missing, the contractor must include the new volleyball net pole system as per specifications.

ON KEY LLC

IMPORTANT NOTICE:

ALL DESIGNS, DRAWINGS AND COPIES ISSUED BY B. QUINONES, ARE PROPERTY OF B. QUINONES, AND CANNOT BE REPRODUCED OR EXHIBITED IN ANY MANNER OR PLACE EXCEPT FOR THE PURPOSE OF ITS DESIGN INTENT OR BY WRITTEN CONSENT OF B. QUINONES. IF FOR ANY REASON, PART OR ALL OF THE B. QUINONES DESIGN IS ISSUED OR BUILT WITHOUT B.QUINONES CONSENT, THE PARTIES INVOLVED SHALL PAY B. QUINONES FEE IN FULL.

Project Name and Address:
Urb. El Rosario
Facility Damage Repair
Calle 3
Vega Baja, Puerto Rico

Client Name and Address:
DEPARTAMENTO DE RECREACION Y DEPORTES DE PR
PO Box 9023207 San Juan
PR 00902-3207
Tel. (787) 721 2800 Fax: (787) 268-1845
www.drd.pr.gov

Design by: B. QUINONES

No.	Revision/Issue	Plot Date:

Brendaly Quiñones Villodas
Ingeniero
Licenciado
Lic. 17715 PE
Puerto Rico
Fecha de Expiración: 2024-06-10
HARD COPY
SIGNATURE AND SEAL
ENG. BRENDALY QUINONES Lic. # 17715

DRD
DEPARTAMENTO DE RECREACIÓN Y DEPORTES

PO Box 9023207
San Juan PR
00902-3207

In this Page:

EXISTING SITE PLAN

Scale:	Details scale:
NOT TO SCALE	AS NOTED

Job #: 2023-000502
Date: MAR 12, 2024
Check by: AUG 19, 2024

Sheet No.

SI-01

PROPOSED SCOPE OF WORK

(A) *Facility Damage – Baseball Field Bleachers Metal Canopy*

1) Paint entire canopy structure all around. See paint notes.
2) Approximately 16' x 42' or 672 SF.
3) Remove supply and repair by replacement of entire canopy structure. Similar to existing. See details.
4) Remove, supply, and repair by replacement of C8 purlins. 80 LF Approx..
5) Remove, supply, and repair by replacement of C4 purlins. 378 LF Approx..
6) Remove, supply, and repair by replacement of new galvalume panel ga 24. (672 SF Approx.).
7) Install new edge trim 116 FT Approx.
8) Install new gutter 42 Ft Approx. Install new downspout (60LF Approx.)
9) Install new knotless .75", #420, 2mm, TS-135LB, 100% nylon with enhanced UV treatment. Bird Net (672 SF Approx.)



(B) *Facility Damage – Baseball Field Bleachers*

1) Repair concrete bleacher sections- Spalling Concrete:
   a. Chip existing loose concrete and treat the exposed rebar. Clean exposed rebar with a steel brush and apply Loctite Extend Rust Neutralizer.
   b. Apply bonding primer and reinforcement corrosion protection.
   c. Clean, patch and finish the affected area with Vinyl Concrete Patch.
2) Paint existing bleachers. See paint notes. Paint all existing painted surfaces, unless otherwise noted.
3) Dimensions: 10' w x 42' l x 80" h. One (1) ea.



(C) *Facility Damage – Baseball Field Dugouts*

1) Chip existing loose concrete and treat the exposed rebar. Clean exposed rebar with a steel brush and apply Loctite Extend Rust Neutralizer.
2) Apply bonding primer and reinforcement corrosion protection.
3) Patch and finish the affected area with Vinyl Concrete Patch.
4) Thin set concrete resurfacing of existing dugout floors. Equal or similar to NewCrete concrete Resurfacer by Rapid Set.
5) Dimensions: 6' w x 14' l. Two (2) ea. (168 SF)
6) Pressure wash cleaning of existing concrete roof. 168 SF.
7) Installation of new waterproofing system. 168 SF. Equal or similar to Danosa RM 5 modified bitumen membrane. The contractor shall provide a 10 YR warranty. Installation of product must be as recommended by the manufacturer.
8) Paint existing dugouts. See paint notes. Paint all existing painted surfaces, unless otherwise noted.



(D) *Facility Damage – Baseball Field Canteen / Restrooms*

1) Spalling Concrete - Chip existing loose concrete and treat the exposed rebar. Clean exposed rebar with a steel brush and apply Loctite Extend Rust Neutralizer.
2) Apply bonding primer and reinforcement corrosion protection.
3) Patch and finish the affected area with Vinyl Concrete Patch.
4) 25' w x 16' l.
5) Pressure wash cleaning of existing concrete roof. 400 SF.
6) Installation of new waterproofing system. 400 SF. Equal or similar to Danosa RM 5 modified bitumen membrane. The contractor shall provide a 10 YR warranty. Installation of product must be as recommended by the manufacturer.
7) Paint existing Canteen (Interior and Exterior). See paint notes. Paint all existing painted surfaces, unless otherwise noted.
8) Interior painting Canteen and Restrooms area 1352 SF Approx.
9) Clean with muriatic acid existing restroom's floor tile. 72 SF Approx.
10) Remove existing canteen floor vinyl tile and install new Thin set concrete resurfacing and paint. Equal or similar to NewCrete concrete Resurfacer by Rapid Set. See Paint Notes. (250 SF)
11) Remove supply and install Two (2), Toilets, two (2) lavatory and one (1) urinal. See Restrooms Structure – Baseball Field scope.
12) Install new kitchen cabinet 6 FT re-use sink, install new faucet. Equal or similar to Delta faucet. See details.
13) See pictures on drawings.



(E) *Facility Damage – Complex Concrete Sidewalks*

1) Pressure wash cleaning of existing sidewalks in front of bleachers and surrounding concrete surfaces. Approximately 232 SF.
2) Thin set concrete resurfacing of existing sidewalks. Equal or similar to NewCrete concrete Resurfacer by Rapid Set. Baseball field - Approximately 232 SF.
3) Pressure wash cleaning of all remaining existing concrete surfaces and sidewalks at baseball field area.



4) Supply and install new two (2) foul poles. Equal or similar to model Grand Slam Fencing Foul Pole Kit, Part # A15-941 by Anthem Sports.
   a. Two 6' high reinforced PVC foul poles wrapped in 8' high Safefoam.
   b. Includes two ground sockets and six 19" yellow tie wraps for attachment.

(F) *Facility Damage – Baseball Field Chain Link Fences*

1) Remove and dispose of existing damaged 6' high chain link fence sections in the outfield perimeter where occur. Approximately 100 LF.
2) Supply and install new 6' high chain link fence sections in the outfield perimeter where occur. Approximately 100 LF.
3) Supply and install new single swing gate near the right field corner of the outfield perimeter. Three (3) LF.
4) Supply and install new double swing gate near the center of the outfield perimeter. Nine (9) LF.
5) Supply and install new double swing gate in the right field corner of the outfield perimeter. 14 LF.
6) Remove and dispose of existing damaged 16' high chain link fence:
   a. The backstop. 55 LF.
   b. In the left field perimeter. 220 LF.
   c. In the right field perimeter. 120 LF.
   d. In front of the bleachers to the backstop. 80 LF.
   e. Total of 475 LF.
7) Supply and install new 16' high chain link fence:
   a. The backstop. 55 LF.
   b. In the left field perimeter. 220 LF.
   c. In the right field perimeter. 120 LF.
   d. In front of the bleachers to the backstop. 80 LF.
   e. Total of 475 LF.
8) Paint all remaining chain link fence. See paint notes.
9) Refer to standard drawings for chain link fence and gates details.
10) Supply and install a new fence topperD all along the perimeter of the outfield fence. Equal or similar to model 01160 Poly-Cap by Baseball Fence Toppers. Approximately 500 LF.

Use three (3in) diameter poles for ten (10FT) and higher heights chain link fence. Use eight (8) FT max separation between poles instead of 10 FT typical to all chain link fence installation.



(G) *Paint General Specifications*

1) Paint all existing structures. (Bleachers, benches, steel structures, concrete structures, buildings, restrooms, canteen, dugouts, where occur).
2) Clean and patch all existing concrete surfaces. See paint notes.
3) Product Description:
   a. Steel Structures: Equal or similar to Sherwin Williams Pro Industrial DTM Acrylic Primer/Finish. Apply one coat of primer and two (2) coats of paint.
   b. Exterior Wall Paint: Equal or similar to Sherwin-Williams Quick Dry Interior/Exterior Stain Blocking Primer. Apply one coat of primer. Apply two (2) coats of paint. A-100 exterior acrylic latex.
   c. Interior Wall Paint: Equal or similar to Sherwin-Williams Moisture Vapor Barrier Interior Latex primer/sealer. Apply one coat of primer and two (2) coats of paint. Promar 400 Zero VOC Interior Latex Primer.
   d. Floors: Similar or equal to American Safety Technologies AS-150 HAPS Free Anti-Slip Coating
   e. All exterior concrete structure or item must be painted with exterior paint.
   f. See paint notes on drawings.
4) Patch and finish the affected area with Vinyl Concrete Patch.



(H) *Facility Damage – Baseball Field Vegetative and Non-Vegetative Debris*

1) Remove approximately 6 CY of non-vegetative debris.
2) 30% Prune trees along the chain link fence in the left and center field area. Five (5) ea.



(I) *Facility Damage – Restrooms Structure – Baseball Field*

1) Remove and dispose of all restroom equipment: two (2) toilets, two (2) lavatories, one (1) urinal, and accessories.
2) Supply and install new ADA complaint restroom equipment and accessories. Include all fittings, valve, p-trap, tail piece, etc.
3) Remove, dispose, and replace toilet fixture. Include toilet seats, fittings, and valve. Ensure the fixture fits in the existing sanitary connection.
4) Material Description (where occur or required):
   a. Lavatory: Wall-mounted. Vitreous China, white, 20-½ in x 18-¼ in with 4 in center faucet holes, front overflow, D-shaped bowl. Two (2) lavatories are needed.
   b. Faucets: Conventional widespread, 0.5 GPM pressure compensating, vandal-resistant multi-laminar spray. Factory set for a maximum of 0.08 gallons per cycle. Two (2) faucets are needed.
   c. Toilet Paper Dispenser: Surface-mounted, multi-roll, stainless steel, satin finish, 6-1/16" W x 11" H x 5-15/16" D. Holds two rolls up to 5-¼" in diameter. Theft-resistant, heavy-duty spindles. Two (2) toilet paper dispensers are needed.
   d. Floor: Refer to paint scope section for details. If apply.
   e. Toilets: Single flush. High Efficiency Toilet (HET), ultra-low consumption (4.8 Lpf/1.28 gpf), utilizes 20% less water. Enlongated. ADA Compliance. Chair Height.
   f. Urinals: Low consumption, 1.0 gallon per flush (1.0 gpf/3.8 Lpf). Siphon jet flush action. Extended sides for privacy, vitreous china. One (1) urinal is needed.
5) Product Reference: (where occur or required):
   a. Lavatory: Equal or similar to American Standard, Lucerne Wall Hung Lavatory Model 0355.012.
   b. Faucets: Equal or similar to American Standard Metering Faucet Model1340.827.
   c. Toilet Paper Dispenser: Equal or similar to Bobrick Model B-2888 Classic Series.
   d. Floor: Refer to paint scope section for details.
   e. Toilets: Similar or equal to American Standard CADET® PRO™ RIGHT HEIGHT® ELONGATED TOILET
   f. Champion Two-Piece 1.28 GPF Single Flush Elongated Chair Height Toilet with Slow-Close Seat in White
   g. Urinals: Similar or equal to KOHLER Dexter 0.125 GPF Urinal with Top Spud in White Model # K-5452-ET-0.
   h. American Standard - Ultima Manual Flo Wise 0.125 GPF Exposed Urinal Flush Valve in Polished Chrome for 0.75 in. Top Spud

(J) *SOW ELECTRICAL WORK*

Facility Damage Electrical - Baseball Field

Baseball Field Lighting System

As part of field lighting system, the contractor must consider the following:

A) Removal of existing lighting poles eight (8ea) and panels system. The installation of a new distribution panel, equal or similar to model GE Load Center: 125 Amps, 120/240V AC, 24 Spaces, 22kA, NEMA 3R Combo Flush/Surface, Main Circuit Breaker. Item 32WT01Mfr. Model TM2412RCU, and install new safety switch 60 A, 1 PH, Nema 3R Model HNF262R to be installed at the existing electrical closet.
B) The contractor must install a control panel equal or similar to MUSCO control link contactor cabinet system at the existing electrical closet.
C) The contractor must re-use the existing lighting system wiring. Unless otherwise noted.
D) All electrical installation must be done as per the code and regulations, and the contractor must provide an electrical certification to the owner.
E) **The contractor must consider Six (6) poles of 60 FT, 18 luminaries Equal or similar to Four (4) – model TLC-LED-550, Four (4) – model TLC-BT-575, Six (6) – model TLC-LED-900 and Four (4) – model TLC-LED-1200, including six (6) precast self-support concrete pole base. All athletic poles must be grounded. (6ea).**
F) The contractor must install new 3-#4 RHHN underground electrical wiring. Use 2in min. diameter PVC SCHD. 40 conduits. See trench detail. (1,350 LF Approx.- 1050 LF underground and 300 LF (50 LF- per new pole). Approx. Total -1350 LF.
G) The contractor must consider a dedicated circuit breaker per each pole.
H) The contractor must consider four (4) Pull boxes.
I) See drawings.



(K) *Facility Damage Electrical – Baseball Field - Bleacher Canopy and Canteen/Restroom*

1) Supply and install new florescent lighting fixture with new LED lighting fixtures equal or similar to CNY LED Canopy Lighting by Lithonia Lighting. Include rough-in, wiring, electrical connection, and on/off switch panel. Include all switches and covers. Installation as recommended by the manufacturer. Two (2) ea. Connect to new distribution panel LPA. Use 3#12, 3/4" PVC SCHD. 40 conduits. (Bleacher)

a. LED Interior/Exterior Luminaire.
b. Color Temp of 4000k.
c. Fixture Voltage: 120 to 277VS
d. LED replacement for: Up to 250W MH
e. Lumens: 6,600 lm
f. Fixture Rated Life: 50,000 hr. Five (5) year warranty.

I) Supply and install exterior lighting fixtures at the roof of Canteen/Restroom structure. Three (3) ea. Equal or similar to model Value LED Area Light 3A by SYLVANIA Luminaires. Include rough-in, wiring, electrical connection, and on/off switch panel. Installation as recommended by the manufacturer. Connect to new distribution panel LPA. Use 3#12, 3/4" PVC SCHD. 40 conduits. Include photocell.

a. LED exterior luminaire.
b. Color Temp of 5000k.
c. Fixture Voltage: 120 to 277V
d. Lumens: 20,000 lm
e. Fixture Rated Life: 100,000 hr. Five (5) year warranty.

ON KEY LLC

IMPORTANT NOTICE:

ALL DESIGNS, DRAWINGS AND COPIES ISSUED BY B. QUINONES, ARE PROPERTY OF B. QUINONES, AND CANNOT BE REPRODUCED OR EXHIBITED IN ANY MANNER OR PLACE EXCEPT FOR THE PURPOSE OF ITS DESIGN INTENT OR BY WRITTEN CONSENT OF B. QUINONES. IF FOR ANY REASON, PART OR ALL OF THE B. QUINONES DESIGN IS ISSUED OR BUILT WITHOUT B.QUINONES CONSENT, THE PARTIES INVOLVED SHALL PAY B. QUINONES FEE IN FULL.

Project Name and Address:
Urb. El Rosario
Facility Damage Repair
Calle 3
Vega Baja, Puerto Rico

Client Name and Address:
DEPARTAMENTO DE RECREACION Y DEPORTES DE PR
PO Box 9023207
PR 00902-3207
Tel. (787) 721 2800 Fax: (787) 268-1645
www.drd.pr.gov

Design by: B. QUINONES

No.	Revision/Issue	Plot Date:

Brendaly Quiñones Villodas
Ingeniero Licenciado
Lic. 17715 PE
Puerto Rico
Fecha de Expiración: 2024-08-10
HARD COPY
SIGNATURE AND SEAL
ENG. BRENDALY QUINONES Lic. # 17715

DRD
DEPARTAMENTO DE RECREACIÓN Y DEPORTES

PO Box 9023207
San Juan PR
00902-3207

In this Page:

PROPOSED
SCOPE OF WORK

Scale:	Details scale:
NOT TO SCALE	AS NOTED

Job #: 2023-000502
Date: MAR 12, 2024
Check by: AUG 19, 2024

Sheet No.

A-01

DRD-CONDICIONES ESPECIALES SUPLEMENTARIAS

I. DISPOSICIONES RELACIONADAS AL DESARROLLO DEL PROYECTO (según aplique):

a. El Contratista deberá familiarizarse con las condiciones existentes y con todas las particularidades que presenta la estructura a la cual se intervendrá

b. El Contratista será responsable de verificar la ubicación exacta y la condición de todos los componentes del proyecto, así como de los componentes del sistema eléctrico y del sistema de distribución de agua potable que existen en las áreas directamente afectadas por los trabajos correspondientes a este contrato.

c. De surgir alguna discrepancia entre los equipos, accesorios o dispositivos existentes a permanecer y los propuestos, el Contratista será responsable de discutir y aclarar la misma con el inspector y/o representante del dueño, antes de tomar cualquier decisión. El Contratista NO realizará trabajo alguno que considere adicional al contrato sin la autorización previa, por escrito, del inspector o representante designado de la DRD para este proyecto. Estos no serán remunerados

d. Las medidas o especificaciones establecidas como *estándar* en reglamentos y códigos, según el uso y aplicación, deberán predominar siempre sobre lo instalado en sitio o lo indicado en los Documentos de Contrato, a menos que se especifique lo contrario en los mismos. De especificarse lo contrario, el Contratista deberá confirmar dicha información con el inspector y/o representante designado de la DRD.

e. De surgir alguna discrepancia en relación con algún tipo de material, equipo o trabajo especificado, el Contratista deberá considerar que siempre prevalecerán los requisitos más restrictivos, incluyendo mayor cantidad, mayor calidad, mayor nivel de seguridad y el material, equipo o trabajo más exigente, según indicado en los Documentos de Contrato.

f. Todo cambio que surja durante la ejecución de los trabajos incluidos en contrato, ya sea por recomendación del Contratista o mediante una solicitud formal del DRD (a través de su representante designado y/o a través del inspector del proyecto), deberá informarse por escrito mediante carta firmada por el Contratista, con la recomendación y la aprobación de la DRD. De haber algún costo adicional o crédito por dichos trabajos, el mismo deberá mencionarse en dicha carta.

g. Cualquier duda o desacuerdo que tenga el Contratista deberá ser informado al DRD mediante correspondencia escrita, con copia a su representante designado y al inspector del proyecto.

h. El Contratista será responsable de realizar las reparaciones a las superficies y/o instalaciones físicas existentes que hayan sufrido daño por causa de los trabajos o actividades relacionadas al desarrollo de la obra, según sea requerido por el representante designado del DRD. Cualquier ruptura de tuberías, infraestructura mecánica o utilidades eléctricas, causada por los trabajos incluidos en este contrato, deberá ser reparada inmediatamente, de forma tal que los servicios afectados por dicha condición sean restablecidos a la mayor brevedad.

i. El Contratista deberá tomar todas las medidas necesarias para evitar:

j. La propagación de polvo fugitivo procedente de actividades de remoción o demolición selectiva y de acarreo de materiales o escombros, en estricto cumplimiento con las disposiciones establecidas en el Reglamento para el Control de Contaminación Atmosférica de la Junta de Calidad Ambiental (JCA) y la reglamentación federal aplicable.

k. La utilización de materiales y equipo que emitan gases y/o residuos tóxicos al ambiente, en estricto cumplimiento con las disposiciones establecidas en el Reglamento para el Control de Contaminación Atmosférica de la Junta de Calidad Ambiental (JCA) y la reglamentación federal aplicable.

l. La propagación de ruidos procedentes de las áreas impactadas por los trabajos incluidos en contrato que excedan los niveles máximos de ruido permitidos por ley, de acuerdo con las disposiciones establecidas en el Reglamento para el Control de Contaminación por Ruidos de la Junta de Calidad Ambiental (JCA) y la reglamentación federal aplicable.

m. La realización de cualquier actividad que pueda afectar adversamente la salud de los residentes de las comunidades aledañas al mismo, en cumplimiento con todas las leyes y reglamentos ambientales, estatales y federales, que sean aplicables. Es de notar que cualquier multa de OSHA notificada al DRD o al Representante Autorizado, como consecuencia, motivada, o relacionada con la conducta del Contratista por trabajos relacionados a este proyecto, será de la entera responsabilidad del mismo.

n. El Contratista deberá proveer el recipiente, camión o medio de almacenamiento y transporte adecuado para disponer, de forma inmediata (en un periodo de 24 horas del lugar designado en el sitio del proyecto para acumular o almacenar los mismos), de toda la basura o escombros que se generen como consecuencia de los trabajos incluidos en contrato. NO se permitirá la utilización de los recipientes de basura existentes en las instalaciones. Toda basura deberá disponerse con su contenido, de forma tal que, de ser tóxica o contaminante, se cumpla con todas las leyes y reglamentos ambientales (estatales y federales) aplicables a estas actividades. Recae como responsabilidad del Contratista el identificar el contenido del material y disponer del mismo adecuadamente, presentando como evidencia el manifiesto de disposición en original.

ñ. La disposición adecuada de todas las unidades, accesorios y equipos mecánicos/eléctricos a ser removidos como parte de este contrato, deberá realizarse siguiendo las indicaciones del inspector o representante designado del DRD para el proyecto de referencia y en cumplimiento con lo dispuesto en las especificaciones técnicas relacionadas y en todas las leyes y reglamentos ambientales (estatales y federales) aplicables para estas actividades, para lo cual se deberá presentar el correspondiente comprobante de disposición de desperdicios (en original) durante el proceso de desarrollo de estos trabajos.

a. El Contratista deberá implantar todas las medidas de seguridad que estime necesarias para delimitar y rotular las áreas impactadas por los trabajos relacionados a este proyecto, así como las áreas dispuestas para almacenaje de materiales y equipos, de forma tal que se pueda restringir el acceso a las mismas de maestros, estudiantes, empleados u otras personas ajenas a los trabajos incluidos en contrato, durante el desarrollo de la obra.

b. El Contratista deberá coordinar, con el funcionario designado como representante del DRD (inspector o coordinador del proyecto) y con el encargado (a) del lugar, el horario más adecuado para realizar los siguientes trabajos:

1. Acarreo y disposición de escombros generados por las actividades de demolición selectiva o remoción de unidades y equipos.

2. Se recuerda que el Contratista será responsable de mantener todas las áreas de trabajo limpias, durante y después de cada día laborable, y será responsable de llevar a cabo todos los trabajos incluidos en contrato, en estrecha coordinación con el representante designado para este proyecto (inspector o supervisor del proyecto), de forma tal que las obras no interrumpan o interfieran con las labores de los otros locales y las actividades que se llevan a cabo en estas instalaciones. De ser necesario realizar cualquier trabajo incluido en contrato, fuera de horas laborables, en días feriados o en fines de semana, el mismo deberá estar coordinado y autorizado (por escrito) por los funcionarios antes mencionados.

q. El Departamento de Recreación y Deportes (DRD) NO le requerirá al Contratista la instalación de una oficina de inspección (*Inspection Office*) para el proyecto de referencia.

II. DISPOSICIONES TÉCNICAS:

a. El Contratista proveerá e instalará toda la conexión razonable a los equipos eléctricos y mecánicos que se incluyan como parte de este contrato, aunque dicha conexión no esté ilustrada en planos. De haber una omisión o discrepancia en las especificaciones o planos, el Contratista será responsable de proveer e instalar el sistema mínimo requerido para que el equipo quede en servicio y la facilidad pueda operar funcionalmente, sin costo adicional al DRD y sin que se afecte la garantía de los equipos antes mencionados. La solución que provea el Contratista cumplirá con todos los códigos y reglamentos aplicables y será aprobada por el DRD.

Ejemplo de Rótulo de Proyecto

Rótulo tamaño 192"x96"





Ejemplo área blanca (reservada) para logos. De tenerlos colocarlos de abajo para arriba.



BRENDALY QUINONES
PROFESSIONAL ENGINEER
EMAIL: INFO@ONKEYLLC.US
PHONE: 787 -379-0556

IMPORTANT NOTICE:

ALL DESIGNS, DRAWINGS AND COPIES ISSUED BY B. QUINONES, ARE PROPERTY OF B. QUINONES, AND CANNOT BE REPRODUCED OR EXHIBITED IN ANY MANNER OR PLACE EXCEPT FOR THE PURPOSE OF ITS DESIGN INTENT OR BY WRITTEN CONSENT OF B. QUINONES. IF FOR ANY REASON, PART OR ALL OF THE B. QUINONES DESIGN IS ISSUED OR BUILT WITHOUT B.QUINONES CONSENT, THE PARTIES INVOLVED SHALL PAY B. QUINONES FEE IN FULL.

Project Name and Address:
Urb. El Rosario
Facility Repair
Calle 3
Vega Baja, Puerto Rico

Client Name and Address:
DEPARTAMENTO DE RECREACION Y DEPORTES DE PR
PO Box 9023207 San Juan
PR 00902-3207
Tel. (787) 721-2800 Fax: (787) 268-1845
www.drd.pr.gov

Design by: B. QUINONES

No.	Revision/Issue	Plot Date:

Brendaly Quiñones Villodas
Ingeniero
Licenciado
Lic. 17715 PE
Puerto Rico
Fecha de Expiración: 2024-06-10
HARD COPY
SIGNATURE AND SEAL
ENG. BRENDALY QUINONES Lic. # 17715

DRD
DEPARTAMENTO DE RECREACIÓN Y DEPORTES
PO Box 9023207
San Juan PR
00902-3207

In this Page:
PROPOSED SIGN AND NOTES

Scale: NOT TO SCALE
Details scale: AS NOTED

Job #: 2023-000502
Date: MAY 30, 2023
Check by: AUG 19, 2024
Sheet No.
A-02

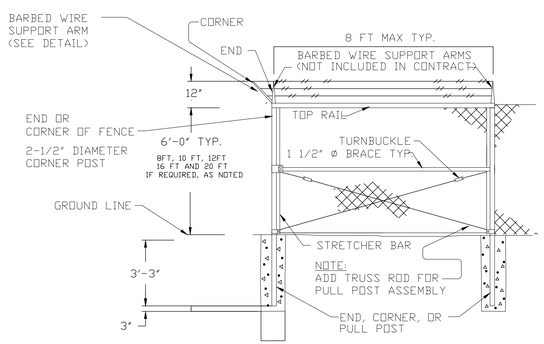

CORNER OR END PANEL ASS'Y
PULL POST ASS'Y SIMILAR (EXCEPT AS INDICATED)

SCALE: NOT TO SCALE

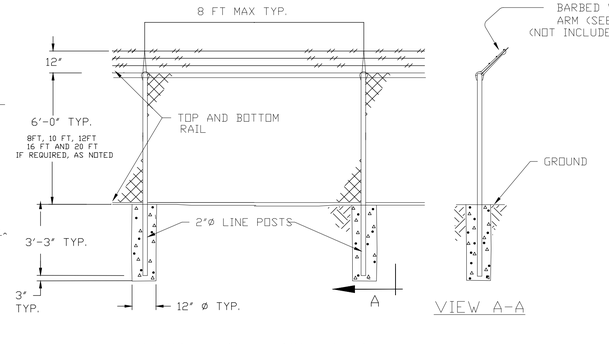

VIEW A-A

TYPICAL LINE FENCE DETAIL

SCALE: NOT TO SCALE

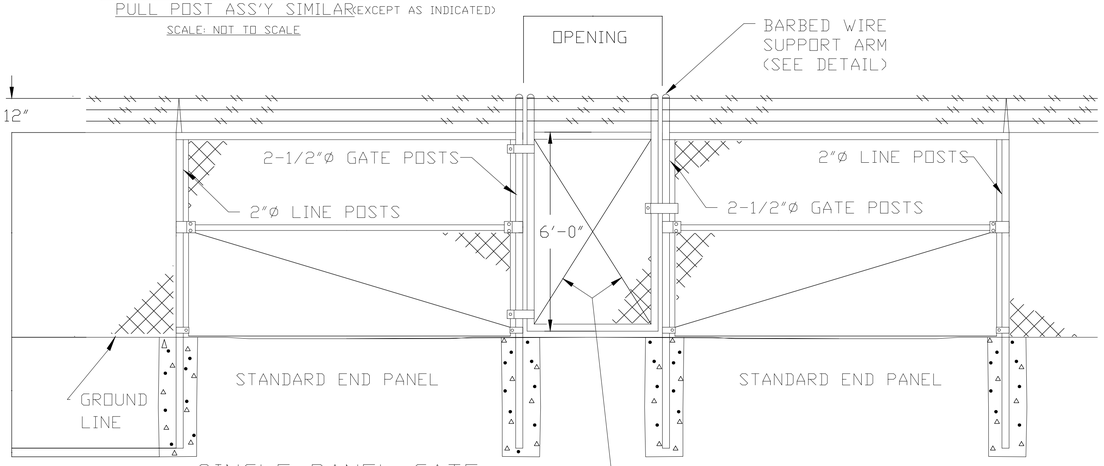

SINGLE PANEL GATE

SCALE: 3/8" = 1'-0"

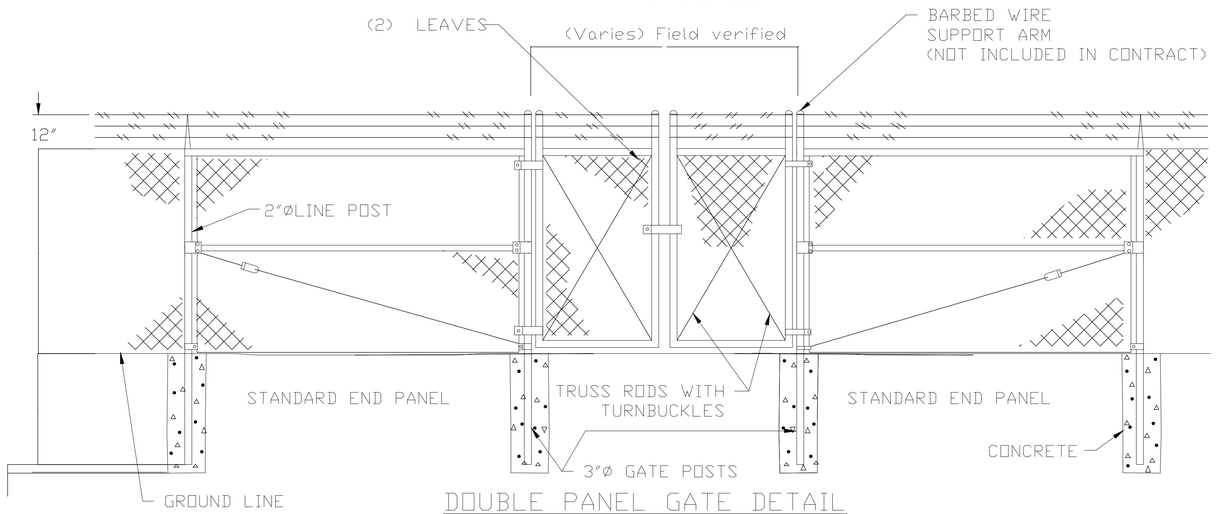

DOUBLE PANEL GATE DETAIL

(TYP. WHERE OCCUR)

CHAIN LINK FENCE TYPICAL DETAILS

SCALE: NOT TO SCALE

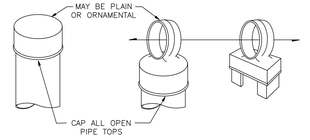

POST TOPS

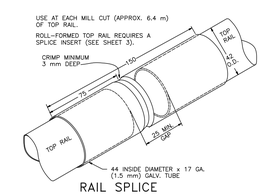

RAIL SPLICE

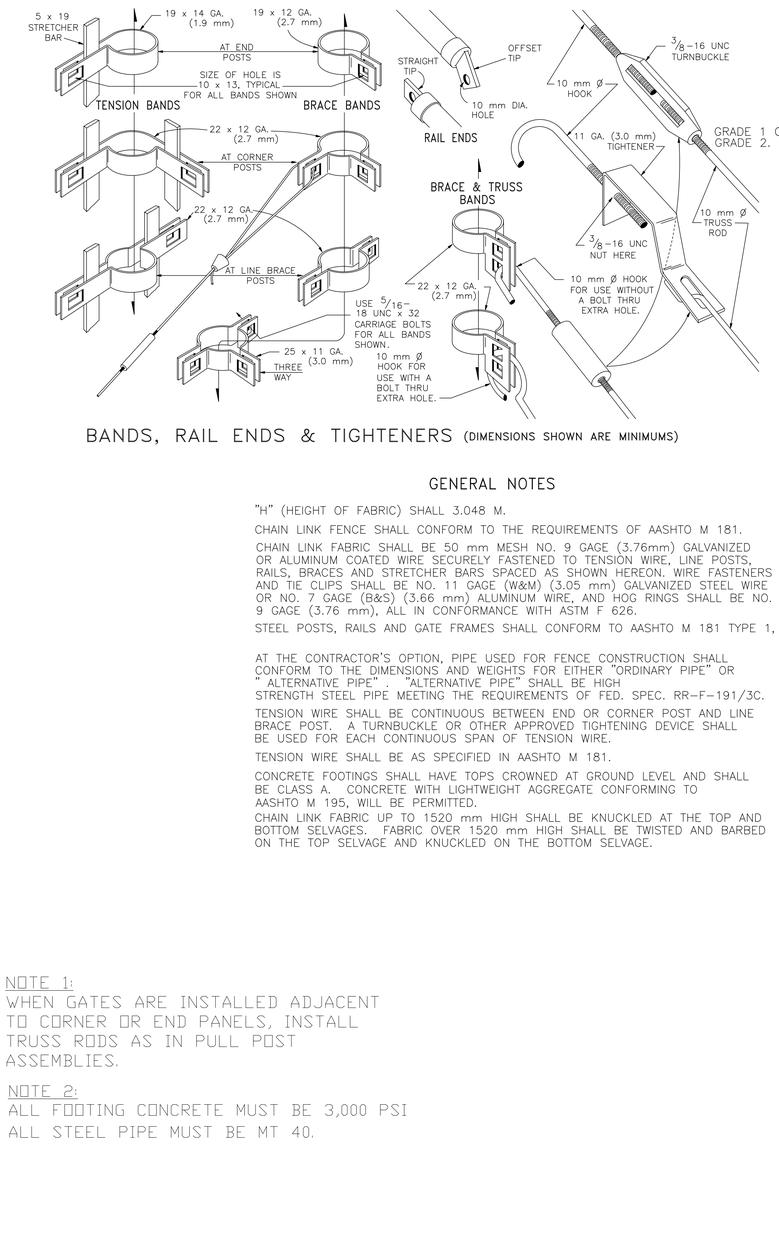

BANDS, RAIL ENDS & TIGHTENERS (DIMENSIONS SHOWN ARE MINIMUMS)

GENERAL NOTES

"H" (HEIGHT OF FABRIC) SHALL 3.048 M.

CHAIN LINK FENCE SHALL CONFORM TO THE REQUIREMENTS OF AASHTO M 181.

CHAIN LINK FABRIC SHALL BE 50 mm MESH NO. 9 GAGE (3.76mm) GALVANIZED OR ALUMINUM COATED WIRE SECURELY FASTENED TO TENSION WIRE, LINE POSTS, RAILS, BRACES AND STRETCHER BARS SPACED AS SHOWN HEREON. WIRE FASTENERS AND TIE CLIPS SHALL BE NO. 11 GAGE (W&M) (3.05 mm) GALVANIZED STEEL WIRE OR NO. 7 GAGE (B&S) (3.66 mm) ALUMINUM WIRE, AND HOG RINGS SHALL BE NO. 9 GAGE (3.76 mm), ALL IN CONFORMANCE WITH ASTM F 626.

STEEL POSTS, RAILS AND GATE FRAMES SHALL CONFORM TO AASHTO M 181 TYPE 1,

AT THE CONTRACTOR'S OPTION, PIPE USED FOR FENCE CONSTRUCTION SHALL CONFORM TO THE DIMENSIONS AND WEIGHTS FOR EITHER "ORDINARY PIPE" OR " ALTERNATIVE PIPE". "ALTERNATIVE PIPE" SHALL BE HIGH STRENGTH STEEL PIPE MEETING THE REQUIREMENTS OF FED. SPEC. RR-F-191/3C.

TENSION WIRE SHALL BE CONTINUOUS BETWEEN END OR CORNER POST AND LINE BRACE POST. A TURNBUCKLE OR OTHER APPROVED TIGHTENING DEVICE SHALL BE USED FOR EACH CONTINUOUS SPAN OF TENSION WIRE.

TENSION WIRE SHALL BE AS SPECIFIED IN AASHTO M 181.

CONCRETE FOOTINGS SHALL HAVE TOPS CROWNED AT GROUND LEVEL AND SHALL BE CLASS A. CONCRETE WITH LIGHTWEIGHT AGGREGATE CONFORMING TO AASHTO M 195, WILL BE PERMITTED.

CHAIN LINK FABRIC UP TO 1520 mm HIGH SHALL BE KNUCKLED AT THE TOP AND BOTTOM SELVAGES. FABRIC OVER 1520 mm HIGH SHALL BE TWISTED AND BARBED ON THE TOP SELVAGE AND KNUCKLED ON THE BOTTOM SELVAGE.

NOTE 1:
WHEN GATES ARE INSTALLED ADJACENT TO CORNER OR END PANELS, INSTALL TRUSS RODS AS IN PULL POST ASSEMBLIES.

NOTE 2:
ALL FOOTING CONCRETE MUST BE 3,000 PSI
ALL STEEL PIPE MUST BE MT 40.

ON KEY LLC

BRENDALY QUIÑONES
PROFESSIONAL ENGINEER
EMAIL: INFO@ONKEYLLC.US
PHONE: 787 -379-0556

IMPORTANT NOTICE:
ALL DESIGNS, DRAWINGS AND COPIES ISSUED BY B. QUIÑONES, ARE PROPERTY OF B. QUIÑONES, AND CANNOT BE REPRODUCED OR EXHIBITED IN ANY MANNER OR PLACE EXCEPT FOR THE PURPOSE OF ITS DESIGN INTENT OR BY WRITTEN CONSENT OF B. QUIÑONES. IF FOR ANY REASON, PART OR ALL OF THE B. QUIÑONES DESIGN IS ISSUED OR BUILT WITHOUT B.QUIÑONES CONSENT, THE PARTIES INVOLVED SHALL PAY B. QUIÑONES FEE IN FULL.

Project Name and Address:
Urb. El Rosario
Facility Repair
Calle 3
Vega Baja, Puerto Rico

Client Name and Address:
DEPARTAMENTO DE RECREACION Y DEPORTES DE PR
PO Box 9023207
PR 00902-3207
Tel. (787) 721 2800 Fax: (787) 268-1845
www.drd.pr.gov

Design by: B. QUINONES

No.	Revision/Issue	Plot Date:

Brendaly Quiñones Villodas
Ingeniero
Licenciado
Lic. 17715 PE
Puerto Rico
Fecha de Expiración: 2024-06-10
HARD COPY SIGNATURE AND SEAL
ENG. BRENDALY QUINONES Lic. # 17715

DRD
DEPARTAMENTO DE RECREACIÓN Y DEPORTES

PO Box 9023207
San Juan PR
00902-3207

In this Page:
PROPOSED DETAILS
CHAIN LINK FENCE
TYPICAL

Scale: Not To Scale
Details scale: AS NOTED

Job #: 2023-000502
Date: MAY 30, 2023
Check by: AUG 19, 2024
Sheet No.
A-03

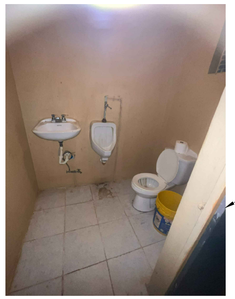

EXISTING BASEBALL FIELD RESTROOMS
REMOVED AND REPLACE EXISTING FIXTURES
AND ACCESORIES.
CLEAN EXISTING TILES AND PAINT EXISTING
SURFACE.

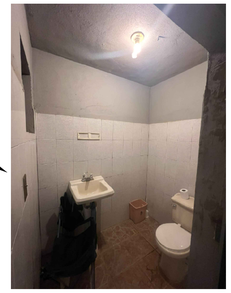

BASEBALL FIELD RESTROOMS

SCALE: NOT TO SCALE



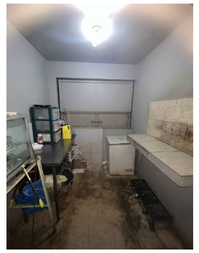

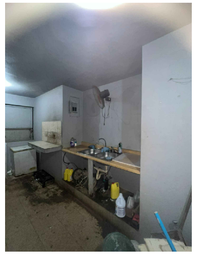



EXISTING CANTEEN
DISTRIBUTION PANEL

EXISTING BASEBALL FIELD CANTEEN
REMOVED EXISTING FLOOR VINYL TILE
AND KITCHEN COUNTERTOP.
CLEAN EXISTING FLOOR AND INSTALL NEW
FLOOR RE-SURFACER. CLEAN, REPAIR AND PAINT
ALL SURFACE AS PER SCOPE OF WORK.

BASEBALL FIELD CANTEEN

SCALE: NOT TO SCALE



EXISTING JALOUSIE
ALUMMINUM WINDOW
24" X 24"

REPLACE EXISTING
DOOR LOCKS
2 EA

ADA BASEBALL FIELD RESTROOMS

SCALE: NOT TO SCALE

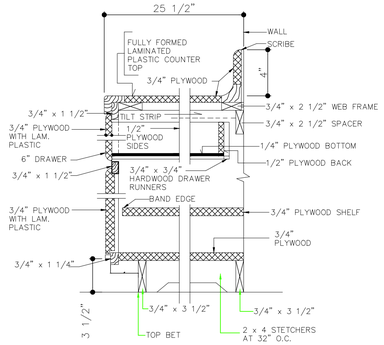

6 FT Cabinet with drawers and doors.
Re-use existing sink and install new faucet equal or similar to Delta Foundations Single-Handle Standard Kitchen Faucet in Chrome. Including plumbing, fittings and valves.

TYPICAL BASE CABINET DETAIL

NOT TO SCALE

PAINT NOTES:

1. ALL INTERIOR AND EXTERIOR WALLS SHALL BE PAINTED WITH THREE COATS OF PAINT. THE INTERIOR THREE COAT SYSTEM CONSISTS OF A SEALER PRIMER COAT AND TWO FINISH COATS WITH 100 % ACRYLIC LATEX PAINT, EGGSHELL FINISH. EXTERIOR THREE COAT SYSTEM CONSISTS OF A QUICK DRY STAIN BLOKER AND SEALER PRIMER AND TWO FINISH COAT OF 100% ACRYLIC PAINT. COLOR TO BE SELECTED BY THE ENGINEER. PATCH AND REPAIR WITH CONCRETE PLASTER ALL SURFACE IF NECESSARY, BEFORE PAINT.

2. ITEMS NOT TO BE PAINTED WHICH ARE IN CONTACT WITH OR ADJACENT TO PAINTED SURFACES SHALL BE REMOVED OR PROTECTED PRIOR TO SURFACE PREPARATION AND PAINTING OPERATIONS. ITEMS REMOVED PRIOR TO PAINTING SHALL BE REPLACED WHEN PAINTING COMPLETED.

3. EXTERIOR WALL TO BE PAINTED SHALL BE CLEAN WITH WATER BLASTER MACHINE AND BE FREE OF FOREING MATTER BEFORE APPLICATION OF PAINT OR SURFACE TREATMENTS. OIL AND GREASE SHALL BE REMOVED PRIOR TO MECHANICAL CLEANING. CLEANING SHALL BE PROGRAMED SO THAT DUST AND OTHER CONTAMINANTS WILL NOT FALL ON WET, NEWLY PAINTED SURFACES.

4. BLISTERING, CRACKING, FLAKING AND PEELING OR OTHER DETERIORATED COATINGS SHALL BE REMOVED. SLICK SURFACES SHALL BE ROUGHENED. DAMAGED AREAS SUCH AS, BUT NOT LIMITED TO, NAIL HOLES, CRACKS, CHIPS, AND SPALLS SHALL BE REPAIRED WITH SUITABLE MATERIAL TO MATCH ADJACENTS UNDAMAGED AREAS.

5. STEEL STRUCTURE SHALL BE SANDED AND PAINTED WITH ONE ANTI -RUST PRIMER AND TWO COAT OF STOPS RUST INDUSTRIAL WATER BASE ENAMEL PAINT. BLISTERING, CRACKING, FLAKING AND PEELING OR OTHER DETERIORATED COATINGS SHALL BE REMOVED.

6. PAINT EXISTING REMAINING CHAIN LINK FENCE WITH OIL BASE ALUMINUM PAINT.

7. SEE PAINTING SPECIFICATIONS

BASEBALL FIELD WORK - FOUL POLE

1) Supply and install new two (2) foul poles. Equal or similar to model Grand Slam Fencing Foul Pole Kit, Part # A15-941 by Anthem Sports.

a. Two 6' high reinforced PVC foul poles wrapped in 8' high Safefoam.

b. Includes two ground sockets and six 19" yellow tie wraps for attachment.

c. Compatible with temporary, in-ground fencing (see illustration).

d. Image for illustration purposes only.



ALTERNATE NUM. 1 (ADDITIVE) BASEBALL FIELD WORK

Baseball Field - Field Work

1) The contractor is responsible for the repair of the existing damaged infield.

2) Remove all grown sod inside the infield area and apply an industrial herbicide to prevent future grow.

3) Rake the area and remove all debris.

4) To repair the infield surface, use a mix equal to 55 percent sand, 30 percent clay, and 15 percent silt covering material. 2 in cover.

5) Prepare the lawn area filling and leveling the poth holes.

6) provide apropiate drainage slope.

7) Install baseball bases set.

ON KEY LLC

IMPORTANT NOTICE:

ALL DESIGNS, DRAWINGS AND COPIES ISSUED BY B. QUINONES, ARE PROPERTY OF B. QUINONES, AND CANNOT BE REPRODUCED OR EXHIBITED IN ANY MANNER OR PLACE EXCEPT FOR THE PURPOSE OF ITS DESIGN INTENT OR BY WRITTEN CONSENT OF B. QUINONES. IF FOR ANY REASON, PART OR ALL OF THE B. QUINONES DESIGN IS ISSUED OR BUILT WITHOUT B.QUINONES CONSENT, THE PARTIES INVOLVED SHALL PAY B. QUINONES FEE IN FULL.

Project Name and Address:
Urb. El Rosario
Facility Repair
Calle 3
Vega Baja, Puerto Rico

Client Name and Address:
DEPARTAMENTO DE RECREACION Y DEPORTES DE PR
PO Box 9023207
PR 00902-3207
Tel. (787) 721 2800 Fax: (787) 268-1545
www.drd.pr.gov

Design by: B. QUINONES

No.	Revision/Issue	Plot Date:

Brendaly Quiñones Villodas
Ingeniero
Licenciado
Lic. 17715 PE
Puerto Rico
Fecha de Expiración: 2024-08-10
HARD COPY
SIGNATURE AND SEAL
ENG. BRENDALY QUINONES Lic. # 17715

DRD
DEPARTAMENTO DE RECREACIÓN Y DEPORTES

PO Box 9023207
San Juan PR
00902-3207

In this Page:
PROPOSED DETAILS

Scale: NOT TO SCALE
Details scale: AS NOTED

Job #: 2023-000502
Date: MAR 11, 2024
Check by: AUG 19, 2024
Sheet No.
A-04

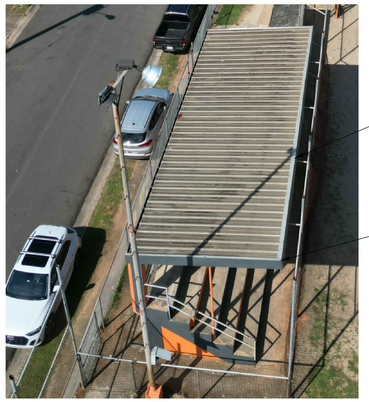

Remove supply and repair by replacement of entire canopy structure. Equal to existing.



Install new edge trim 116 FT Aprox.

REPLACE EXISTING STEEL ANCHOR BASE (5EA)



1/2" x 7" wedge anchor bolt

<6" x 3" x 1/4" Anchor Base Angle Plate

Existing beam to remain

Existing Concrete Column



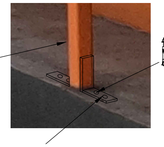

Existing steel columns to remain

<2.5"x2.5"x1/8" both sides Anchor base with (2ea) 3/8"x3" wedge anchor bolt



(9ea) C4x3.5x42' GA 14

(5ea) C8x3.5x16' GA 14

BASEBALL FIELD
EXISTING CANOPY TO BE REPAIRED

SCALE: NOT TO SCALE

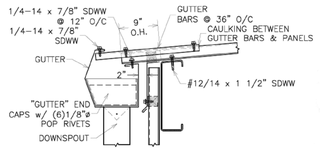

METAL GUTTER & DOWNSPOUT DETAIL

NOTES:
1. GUTTER TO BE CAULKED & LAPPED 4" MIN. AND POP RIVETED TOGETHER USING (8) 1/8"ø POP RIVETS.
2. FIELD LOCATE AND MARK DOWNSPOUT LOCATION IN BOTTOM OF GUTTER. DRAW LINE FROM CORNER TO CORNER AND CUT ALONG LINE. BEND TABS DOWN AND POP RIVET INSIDE DOWNSPOUT.
3. USE THE CHART TO THE LEFT FOR DIMENSION VALUES FOR YOUR PARTICULAR ROOF PITCH.
4. GUTTER SIZE AND GUTTER BAR SPACING MUST BE ADJUSTED TO SUIT LOCAL WEATHER PECULIARITIES AND/OR TO ACCOMMO-DATE LONG ROOF SLOPES.

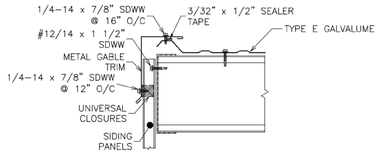

METAL ROOF END CLOSURE TRIM DETAIL

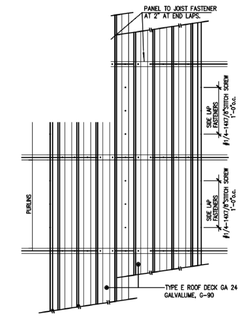

INSTALLATION DETAIL OF STEEL ROOF DECK
(NOT TO SCALE)

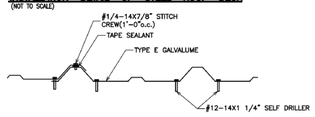

INSTALLATION INSTRUCTIONS

1- STEEL DECK PLATES SHALL SPAN AT LEAST 3 JOIST.
2- DECK SHEETS SHOULD BE PLACED IN ACCORDANCE WITH APPROVED ERECTION LAYOUT DRAWINGS SUPPLIED BY THE DECK MANUFACTURE'S STANDARS AND SHALL BE ERECTED BEGINING AT THE LOW SIDE TO INSURE THAT END LAPS ARE SHINGLE FASHION.
3- END LAPS SHALL BE 2" MINIMUM AND SHOULD OCCURS OVER SUPPORT.
4- ALL LAPS SHALL BE CENTER DIRECTLY OVER PURLINS
5- ALL FASTENERS SHALL BE IN ACCORDANCE WITH MANUFACTURE'S SPECIFICATION AND ERECTION LAYOUTS.
6- SUPPORT FASTENERS #12-14X1 1/4 SELF DRILLER
7- METAL DECK SHALL BE FACTORY MUTUAL APPROVED.

NOTES :
DECK SHALL BE FASTENED TO JOIST SO AS TO RESIST AN UPLIFT PRESSURE OF 80PSF.

WHERE OCCUR

Existing Spalling Concrete repair (where occur)







- I - Chip the existing loose concrete and treat the exposed rebar. Clean exposed rebar with a steel brush and apply Loctite Extend Rust Neutralizer.

- II- Apply :



Sika® Armatec®-110 EpoCem

BONDING PRIMER AND REINFORCEMENT CORROSION PROTECTION

Sika® Armatec®-110 EpoCem is a cementitious epoxy resin compensated 3-component, solvent-free, coating material with corrosion inhibitor, used as bonding primer and reinforcement corrosion protection.

- ✓ Contains EpoCem® technology - improved bonding agent
- ✓ Extended open times for repair mortars
- ✓ Excellent adhesion to concrete and steel

- III – Patch and finish the affected area with Vinyl Concrete Patch.



EQUAL OR SIMILAR

SPALLING CONCRETE REPAIR

SCALE: NOT TO SCALE

ON KEY LLC

IMPORTANT NOTICE:

ALL DESIGNS, DRAWINGS AND COPIES ISSUED BY B. QUINONES, ARE PROPERTY OF B. QUINONES, AND CANNOT BE REPRODUCED OR EXHIBITED IN ANY MANNER OR PLACE EXCEPT FOR THE PURPOSE OF ITS DESIGN INTENT OR BY WRITTEN CONSENT OF B. QUINONES. IF FOR ANY REASON, PART OR ALL OF THE B. QUINONES DESIGN IS ISSUED OR BUILT WITHOUT B.QUINONES CONSENT, THE PARTIES INVOLVED SHALL PAY B. QUINONES FEE IN FULL.

Project Name and Address:
Urb. El Rosario
Facility Repair
Calle 3
Vega Baja, Puerto Rico

Client Name and Address:
DEPARTAMENTO DE RECREACION Y DEPORTES DE PR
PO Box 9023207 San Juan
PR 00902-3207
Tel. (787) 721 2800 Fax: (787) 268-1845
www.drd.pr.gov

Design by: B. QUINONES

No.	Revision/Issue	Plot Date:

Brendaly Quiñones Villodas
Ingeniero Licenciado
Lic. 17715 PE
Puerto Rico
Fecha de Expiración: 2024-06-10
HARD COPY SIGNATURE AND SEAL
ENG. BRENDALY QUIÑONES LIC. # 17715

DRD
DEPARTAMENTO DE RECREACIÓN Y DEPORTES

PO Box 9023207
San Juan PR
00902-3207

In this Page:
PROPOSED STRUCTURAL REPAIRS

Scale: NOT TO SCALE
Details scale: AS NOTED

Job #: 2023-000502
Date: MAR 11 2024
Check by:AUG 19, 2024
Sheet No.
S-01

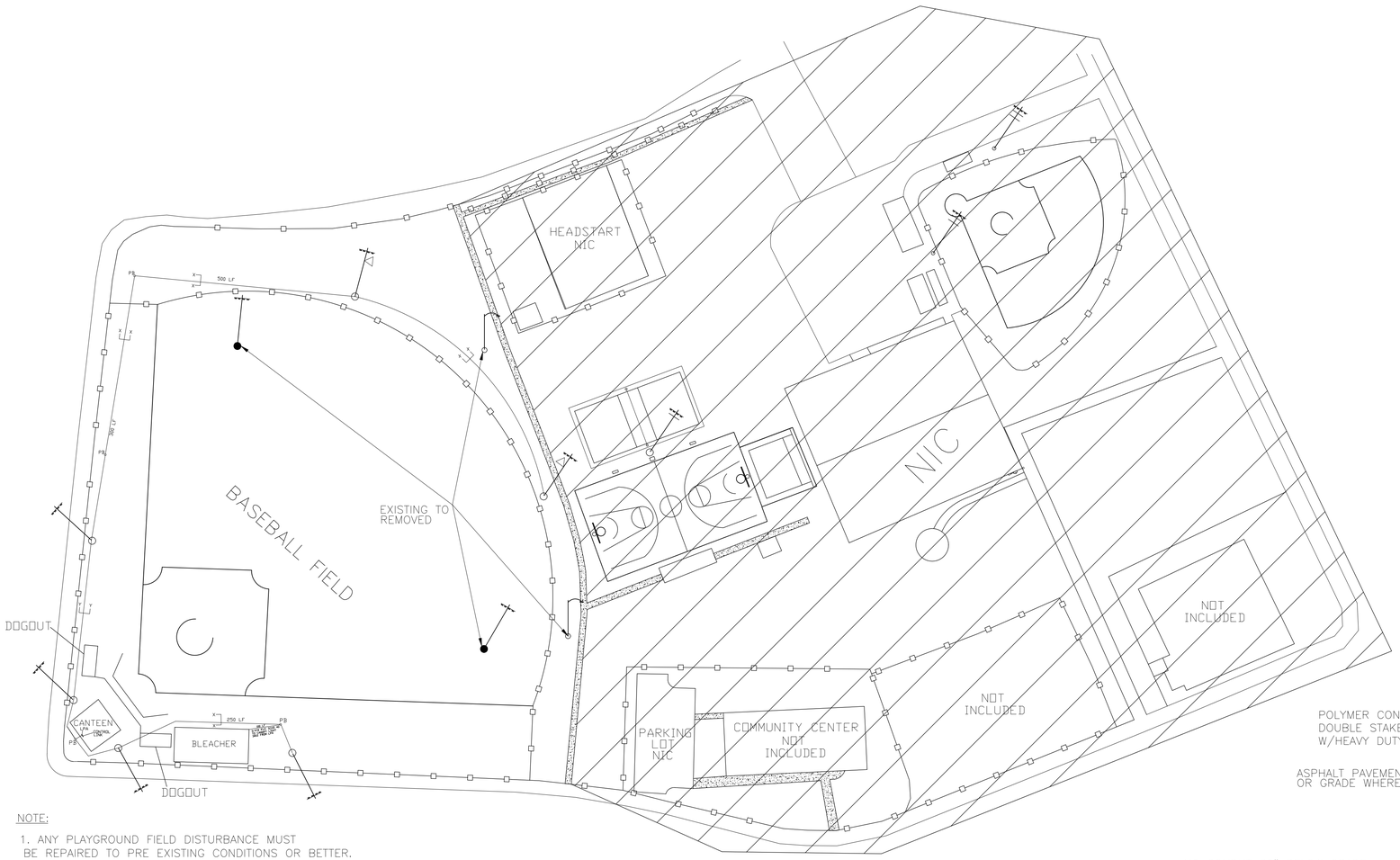

NOTE:

1. ANY PLAYGROUND FIELD DISTURBANCE MUST BE REPAIRED TO PRE EXISTING CONDITIONS OR BETTER.
2. WALKING PATH LIGHTING AND ALL BUILDING EXTERIOR LIGHTING MUST INCLUDE PHOTOCELL SWITCH.

PROPOSED ELECTRICAL SITE PLAN

NOT TO SCALE

LEGEND:

New exterior luminaires. Equal or similar to model MUSCO – Baseball Field

- (6) 60' GALVANIZED STEEL POLE
- (6) PRECAST CONCRETE BASE
- (4) TLC–LED–550
- (4) TLC–BT–575
- (6) TLC–LED–900
- (4) TLC–LED–1200
- (1) CABINET Control–Link™

◁ – WALKING PATH LIGHTING NOT INCLUDED IN CONTRACT

EXISTING FIELD METAL POLE TO BE REMOVED. (EIGHT (8 EA) AND INSTALL SIX (6EA)

EXISTING CONCRETE POLE TO BE REMOVED.

X–X New underground electrical wire with 3#4 THWN. (250 LF AND 500 LF) (655 LF– Outdoor Basketball Court) (450 LF– ADA Baseball Field)

Y–Y New underground electrical wire with 3#4 THWN. (300 LF)

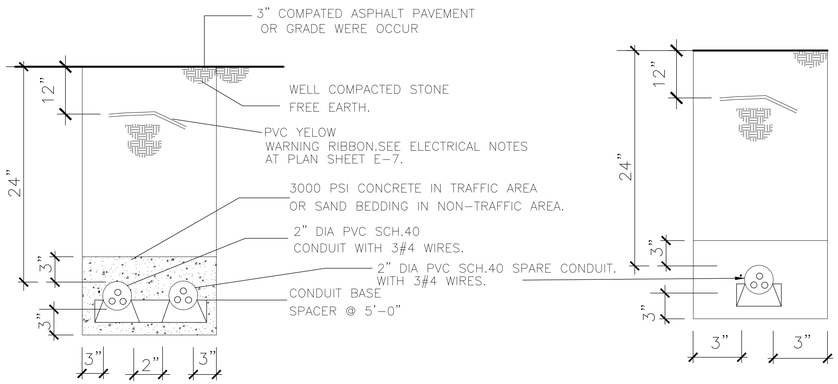

SECTION Y–Y DETAIL

SECTION X–X DETAIL

TRENCH SECTION DETAIL

NOT TO SCALE

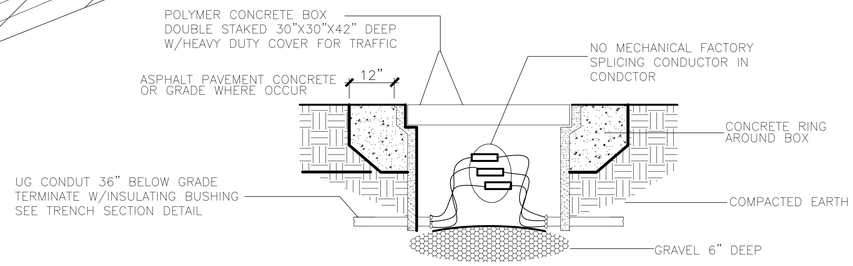

PULL BOX DETAIL

NOT TO SCALE

EQUAL OR SIMILAR



GE Load Center: 125 A Amps, 120/240V AC, 24 Spaces, 22kA, NEMA 3R Combo Flush/Surface, Main Circuit Breaker
Item 32WT01Mfr. Model TM2412RCU

DISTRIBUTION PANEL

SCALE: NOT TO SCALE

EQUAL OR SIMILAR



SIEMENS Safety Switch: Non–Fusible, 60 A, Single Phase, 600V AC, Galvanized Steel, Indoor/Outdoor. NEMA 3R
Item 20RC89Mfr. Model HNF262R

DISCONNECT SWITCH

SCALE: NOT TO SCALE

EXISTING SWITCH PANELS TO BE REMOVED. INSTALL NEW DISTRIBUTION PANEL AND NEW CONTROL LINK.
DEMOLISH EXISTING CONCRETE COVER AND CONSIDER TO INSTALL NEW GALV. METAL JUNCTION BOX.



BASEBALL FIELD ELECTRICAL ROOM

SCALE: NOT TO SCALE

ON KEY LLC

IMPORTANT NOTICE:

ALL DESIGNS, DRAWINGS AND COPIES ISSUED BY B. QUINONES, ARE PROPERTY OF B. QUINONES, AND CANNOT BE REPRODUCED OR EXHIBITED IN ANY MANNER OR PLACE EXCEPT FOR THE PURPOSE OF ITS DESIGN INTENT OR BY WRITTEN CONSENT OF B. QUINONES. IF FOR ANY REASON, PART OR ALL OF THE B. QUINONES DESIGN IS ISSUED OR BUILT WITHOUT B.QUINONES CONSENT, THE PARTIES INVOLVED SHALL PAY B. QUINONES FEE IN FULL.

Project Name and Address:
Urb. El Rosario
Facility Repair
Calle 3
Vega Baja, Puerto Rico

Client Name and Address:
DEPARTAMENTO DE RECREACION Y DEPORTES DE PR
PO Box 9023207 San Juan
PR 00902-3207
Tel. (787) 721 2800 Fax: (787) 268-1545
www.drd.pr.gov

Design by: B. QUINONES

No.	Revision/Issue	Plot Date:

Brendaly Quiñones Villoldo
Ingeniero Licenciado
Lic. 17715 PE
Puerto Rico
Fecha de Expiración: 2024-05-10
HARD COPY SIGNATURE AND SEAL
ENG. BRENDALY QUIÑONES Lic. # 17715

DRD
DEPARTAMENTO DE RECREACIÓN Y DEPORTES
PO Box 9023207
San Juan PR
00902–3207

In this Page:
PROPOSED ELECTRICAL SITE PLAN

Scale: NOT TO SCALE
Details scale: AS NOTED

Job #: 2023-000502
Date: MAR 12, 2024
Check by:AUG 19, 2024
Sheet No.
E-01

GENERAL ELECTRICAL NOTES:

1. ALL WORK SHALL BE STRICTLY COORDINATED WITH OWNER'S REPRESENTATIVE, A WRITTEN NOTICE TO PROCEEDE FROM THE OWNER IS REQUIRED PRIOR START THE CONSTRUCTION WORKS. ALL MATERIALS AND INSTALLATION SHALL CONFORM TO THE OWNER'S STANDARDS AND SPECIFICATION.
2. ELECTRICAL CONTRACTOR SHALL PROVIDE ALL REQUIRED INSURANCES ACCORDING TO OWNER'S REPRESENTATIVE FOR PROTECTION AGAINST PUBLIC LIABILITY AND PROPERTY DAMAGE.
3. ALL ELECTRICAL CONSTRUCTION WORKS SHALL BE DONE IN A THOROUGH AND WORKMANLIKE MANNER BY A LICENSED CONTRACTOR FOR A FULLY OPERATIVE SYSTEM IN ACCORDANCE WITH THE PLANS, SPECS AND CONSTRUCTION DRAWINGS. THE LATEST EDITIONS OF THE NATIONAL ELECTRICAL, FIRE AND LOCAL CODES HAVING JURISDICTION SHALL BE FOLLOWED.
4. ELECTRICAL CONTRACTOR SHALL VISIT THE PROJECT PRIOR QUOTATION AND SHALL ADJUST HIS WORK TO ALL CONDITIONS FOUNDED ON SITE ACCORDING TO ARCHITECTURAL, CIVIL, STRUCTURAL, PLUMBING, MECHANICAL AND ELECTRICAL DRAWINGS. ALL ADJUSTMENTS AND CHANGES REQUIRED DUE TO EXISTING CONDITIONS SHALL BE INCLUDED IN HIS QUOTATION.
5. SPECIAL CONDITIONS APPLY TO ELECTRICAL DRAWINGS, THEY ARE SCHEMATICS. ELECTRICAL CONTRACTOR SHALL INCLUDE IN HIS QUOTATION ALL COSTS NECESSARIES TO PROVIDE A COMPLETE INSTALLATION READY FOR USE ACCORDING TO DRAWINGS AND SPECIFICATIONS.
6. ELECTRICAL CONTRACTOR SHALL COORDINATE WITH MANUFACTURER'S SUPPLIER EXACT REQUIREMENTS FOR THE INSTALLATION AND PROTECTION OF ALL ELECTRICAL EQUIPMENTS AND MATERIALS PRIOR QUOTATION. ALL EQUIPMENTS AND MATERIALS SHALL BE NEW EXCEPT UNLESS OTHERWISE INDICATED AND SHALL BEAR UNDERWRITTERS AND UNION LABLES.
7. ELECTRICAL CONTRACTOR IS RESPONSIBLE TO FURNISH AND INSTALL ALL ELECTRICAL EQUIPMENTS INCLUDING CONTROL PANELS, OUTLETS, DEVICES, WIRING, ETC. ACCORDING TO DRAWINGS UNLESS OTHERWISE INDICATED.
8. ALL DISTRIBUTION PANEL BOARDS SHALL BE CONSTRUCTED WITH A GROUND BUS SEPARATE FROM NEUTRAL ONE TO CONNECT ALL GROUNDING GREEN WIRES. CIRCUIT BREAKERS SHALL BE BOLT–ON TYPE, PLUG–IN TYPE NOT ALLOWED. PROVIDE IDENTIFICATION OF ALL BRANCH CIRCUITS ON A TYPEWRITTEN DIRECTORY CARD IN THE PANEL DOOR.
9. ELECTRICAL CONTRACTOR SHALL BE RESPONSIBLE FOR BALANCING ALL LOADS ON DISTRIBUTION PANELBOARD. MAXIMUN LOAD FOR EACH BRANCH CIRCUITS IS EIGHTY PERCENT. (80%)
10. ALL WIRING DEVICE SHALL BE SPECIFICATION GRADE.

CS CONTRACTOR SELECT™ — LITHONIA LIGHTING

Catalog Number	
Notes	
Type	

EQUAL OR SIMILAR

Contractor Select™

CNY LED

Canopy Lighting



The CNY LED canopy luminaires are versatile, energy-efficient solutions for surface-mount applications. Available in two sizes, these luminaires can replace a wide range of existing canopy luminaires; anything from CFL to 400W metal halide. An LED array light source coupled with a translucent polycarbonate lens creates visually comfortable illumination that is far superior to similar products that use a single bright LED and clear lenses. Smooth sides greatly enhance the aesthetic of this product making it suitable for wider range of applications than industrial-looking finned products.

FEATURES:

- Energy efficient – Can save up to 80% when replacing metal halide
- LED array light source and translucent lens for visually comfortable illumination
- Quick-mount feature eliminates the need to open luminaire for installation
- DLC Premium listed

Catalog Number	UPC	Description	Replaces Up To	Lumens	Wattage	CCT	Voltage	Finish	Pallet qty.
CNY LED P1 40K MVOLT DDB M4	191814909320	CANOPY LUMINAIRE	150W METAL HALIDE	4,500	35W	4000K	120-277V	DARK BRONZE	48
CNY LED P2 40K MVOLT DDB M4	191814909344	CANOPY LUMINAIRE	250W METAL HALIDE	6,600	52W	4000K	120-277V	DARK BRONZE	48

Accessories: *Ordered and shipped separately.*

CNYBCP 14 Inch x 14 Inch Beauty Cover Plate

CANOPY LIGHTING FIXTURE

SCALE: NOT TO SCALE

Datasheet: **SportsCluster® Lighting System**

TLC for LED®

EQUAL OR SIMILAR

Lighting System for Mounting to Existing Structures

- Factory wired, aimed, and tested
- Easy installation to existing structures
- Comprehensive corrosion package
- Grounding connection for bonding to pole or down conductor

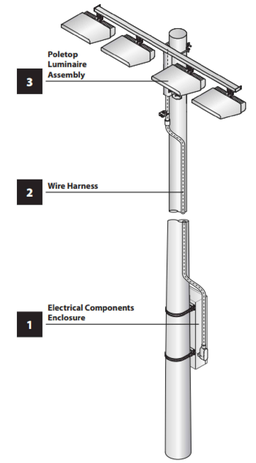

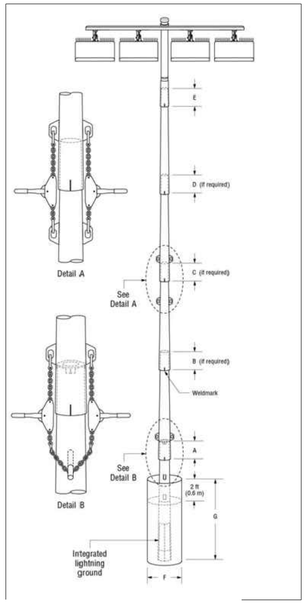

TLC for LED is a trademark of Musco Sports Lighting, LLC and is registered in the United States. ©2015, 2019 Musco Sports Lighting, LLC. • U.S. and foreign patents issued and pending. • IN-1927-ver04.4

musco — www.musco.com • lighting@musco.com

Foundation Notes:

1. Concrete backfill is calculated to 2 ft (0.6m) below grade (no overage included). Top 2 ft (0.6m) to be class 5 soil compacted to 95% density of surrounding undisturbed soil unless otherwise specified in stamped structural design.
2. Concrete backfill required 3000 lb/in² (20 MPa) minimum.
3. Foundation design per 2018 IBC, 170 mph, exposure category C, variation STD (Risk Category II).
4. Assumes IBC class 5 soils.
5. Standard bases include integrated lightning protection. If bases are cut, supplemental lightning protection is required. Contact Musco for materials and instruction.
6. Lightning protection is a manufacturer installed concrete encased electrode and connector. Ground connection is made when concrete base is installed and footing is poured. No additional steps required.

BASEBALL FIELD POLE

SCALE: NOT TO SCALE

SYLVANIA Luminaires

ValueLED™ Area Light 3A

EQUAL OR SIMILAR

Application

The SYLVANIA ValueLED Area Light 3A luminaires are the perfect alternative to traditional lighting technologies, offering a variety of solutions to illuminate parking lots, parking garage roofs and general area lighting.

Benefits and Features

- IP65 rated body offered in a modern and sleek design
- Each luminaire ships with a universal mounting accessory for round/square pole mounting and tenon mounting
- DLC Premium listed to maximize rebate opportunities
- Integrated 3 pin photocontrol receptacle compatible with Standard NEMA photo cell. Shorting cap included
- Up to 135 LPW
- 4000K and 5000K color temperatures
- CRI >70
- Offered in 150 and 300 watts
- Type III and V distribution
- Energy savings up to 73%

Electrical

- 120-277Vac
- Power Factor >90%
- THD <20%
- 0-10V dimmable

Optical

- Lens is polycarbonate

Rated Life

- 100,000 hours (L_{70}) @25°C

Warranty

- 5-year

Ambient Operating Range

- -40°F to +102°F (-40°C to +40°C)



Wattage Comparison

Traditional Source	Traditional System Wattage	LED System Wattage	Energy Savings
250W MH	290W	150W	48%
250W HPS	295W	150W	49%
320W MH	370W	150W	59%
750W HPS	820W	300W	63%
750W MH	840W	300W	64%
1000W MH	1080W	300W	72%
1000W HPS	1100W	300W	73%

Certifications and Listings

- cULus
- RoHS
- FCC
- IP65
- DLC Premium

Installation

- Each luminaire ships with a universal mounting accessory for round/square pole mounting

EXTERIOR WALL/ROOF LIGHTING

SCALE: NOT TO SCALE

ON KEY LLC

IMPORTANT NOTICE:

ALL DESIGNS, DRAWINGS AND COPIES ISSUED BY B. QUINONES, ARE PROPERTY OF B. QUINONES, AND CANNOT BE REPRODUCED OR EXHIBITED IN ANY MANNER OR PLACE EXCEPT FOR THE PURPOSE OF ITS DESIGN INTENT OR BY WRITTEN CONSENT OF B. QUINONES. IF FOR ANY REASON, PART OR ALL OF THE B. QUINONES DESIGN IS ISSUED OR BUILT WITHOUT B.QUINONES CONSENT, THE PARTIES INVOLVED SHALL PAY B. QUINONES FEE IN FULL.

Project Name and Address:
Urb. El Rosario
Facility Repair
Calle 3
Vega Baja, Puerto Rico

Client Name and Address:
DEPARTAMENTO DE RECREACION Y DEPORTES DE PR
PO Box 9023207 San Juan
PR 00902-3207
Tel. (787) 721 2800 Fax: (787) 268-1545
www.drd.pr.gov

Design by: B. QUINONES

No.	Revision/Issue	Plot Date:

Brendaly Quiñones Villodas — Ingeniero Licenciado — Lic. 17715 PE — Puerto Rico

Fecha de Expiración: 2024-06-10

HARD COPY SIGNATURE AND SEAL
ENG. BRENDALY QUIÑONES Lic. # 17715

DRD DEPARTAMENTO DE RECREACIÓN Y DEPORTES

PO Box 9023207
San Juan PR
00902–3207

In this Page:

PROPOSED LIGHTING FIXTURES AND NOTES

Scale: NOT TO SCALE
Details scale: AS NOTED

Job #: 2023-000502
Date: MAR 12, 2024
Check by: AUG 19, 2024

Sheet No.

E-02

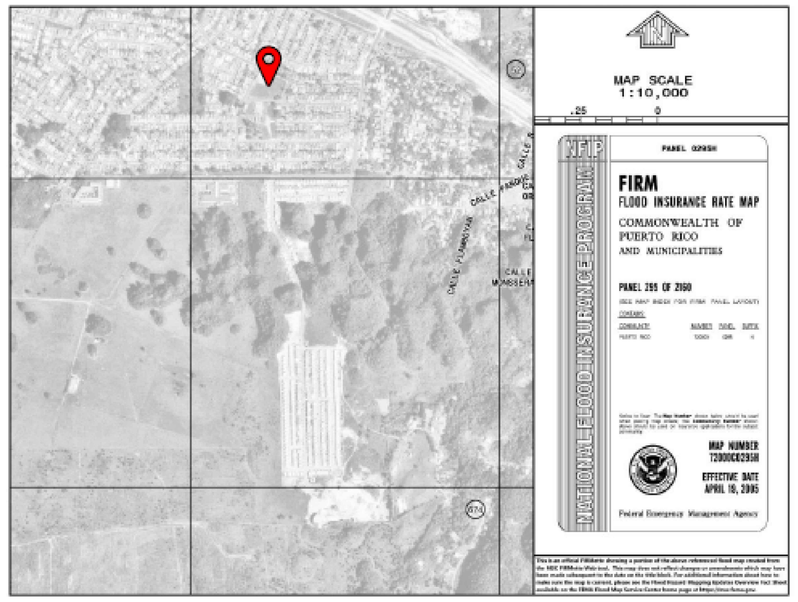

FLOOD MAP

SCALE: NOT TO SCALE

MAP NUMBER: 72000C0295H
EFFECTIVE DATE: APRIL 19, 2005
FLOOD ZONE: X

DRD
DEPARTAMENTO DE RECREACIÓN Y DEPORTES

URB EL ROSARIO, VEGA BAJA

18°26'02.8"N 66°23'39.8"W

18.434100, -66.394400

EXHIBIT A - FOUR CORNERS COORDINATES



- **A** LAT. 18.435554, LONG. -66.394473
- **B** LAT. 18.433512, LONG. -66.395105
- **C** LAT 18.435194, LONG. -66.393621
- **D** LAT. 18.433474 LONG. -66.394027

DRD
DEPARTAMENTO DE RECREACIÓN Y DEPORTES

URB EL ROSARIO, VEGA BAJA

18°26'02.8"N 66°23'39.8"W

18.434100, -66.394400

No disturbed areas, waterways or wetlands.

EXHIBIT B – VICINITY MAP

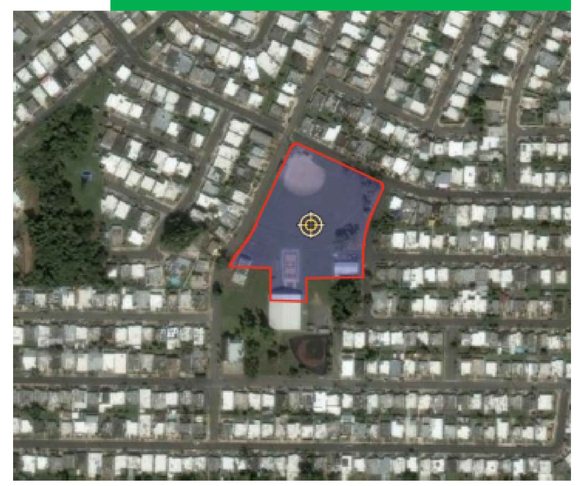

LOCATION MAP

SCALE: NOT TO SCALE

FEMA PA CODE: (000-UFXSJ-00)
PROJECT NUMBER: 87524
PW NUMBER: 1863
DAMAGE INVENTORY NUMBER: 253943
DR NUMBER: 4339

DRD
DEPARTAMENTO DE RECREACIÓN Y DEPORTES

URB EL ROSARIO, VEGA BAJA

18°26'02.8"N 66°23'39.8"W

18.434100, -66.394400

Existing footprint will remain.

EXHIBIT C – PROPOSED FOOTPRINT



URB EL ROSARIO FACILITY REPAIR, VEGA BAJA, PR

OUTDOOR FACILITIES AND COVERED BASKETBALL COURT

CALLE 3
VEGA BAJA, PUERTO RICO

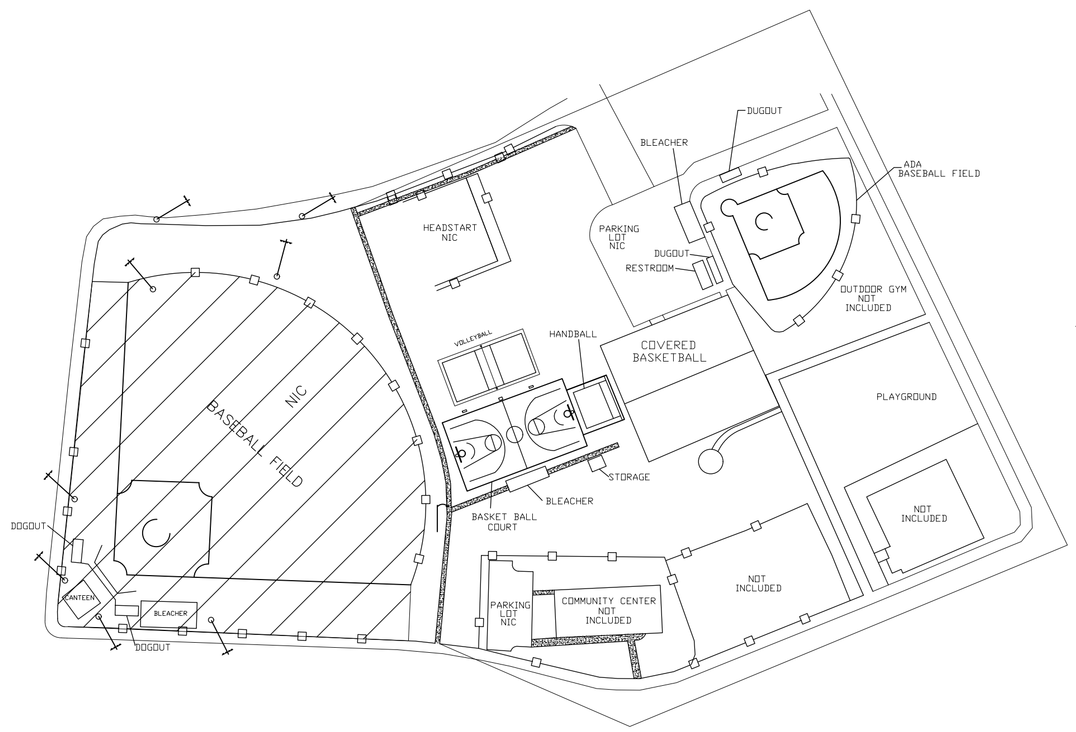

SITE PLAN

NOT TO SCALE

SHEET INDEX

SHEET	NAME	DESCRIPTION
1	T-01	TITLE
2	SI-01	SITE PLAN
3	A-01	PROPOSED SCOPE OF WORK
4	A-02	PROPOSED SCOPE OF WORK CONT.
5	A-03	PROPOSED DETAILS
6	A-04	PROPOSED CHAIN LINK GATE DETAIL
7	A-05	SIGN DETAILS AND NOTES
8	S-01	NEW BLEACHERS CANOPY DETAIL
9	S-02	CANOPY FOOTING DETAIL
10	S-03	STRUCTURAL REPAIRS DETAILS
11	E-01	PROPOSED ELECTRICAL WORK
12	E-02	PROPOSED LIGHTINGS AND NOTES
13	ALT-01	ALTERNATE NUM. 1 – PLAYGROUND

ON KEY LLC

IMPORTANT NOTICE:

ALL DESIGNS, DRAWINGS AND COPIES ISSUED BY B. QUINONES, ARE PROPERTY OF B. QUINONES, AND CANNOT BE REPRODUCED OR EXHIBITED IN ANY FORM WHATSOEVER, EXCEPT FOR THE PURPOSE OF ITS DESIGN, WITHOUT OR BY WRITTEN CONSENT OF B. QUINONES. IF FOR ANY REASON, PART OR ALL OF THE B. QUINONES DESIGN IS ISSUED OR BUILT WITHOUT B.QUINONES CONSENT, THE PARTIES INVOLVED SHALL PAY B. QUINONES FEE IN FULL.

Project Name and Address:
Urb El Rosario
Facility Damage Repair
Calle 3
Vega Baja, Puerto Rico

Client Name and Address:
DEPARTAMENTO DE RECREACION Y DEPORTES DE PR
PO Box 9023207 San Juan
PR 00902-3207
Tel. (787) 721-2800 Fax: (787) 268-1845
www.drd.pr.gov

Design by: B. QUINONES

No.	Revision/Issue	Plot Date:

Brendaly Quiñones Villodas
Ingeniero Licenciado
Lic. 17715 PE
Puerto Rico
Fecha de Expiración: 2024-06-10

HARD COPY SIGNATURE AND SEAL
ENG. BRENDALY QUINONES Lic. # 17715

DRD
DEPARTAMENTO DE RECREACIÓN Y DEPORTES

PO Box 9023207
San Juan PR
00902-3207

In this Page:

TITLE SHEET

Scale:

Details scale: AS NOTED

Job #: 2023-000123

Date: MAR 12, 2024

Check by: AUG 19, 2024

Sheet No.

T-01



LOCATION PLAN

NOT TO SCALE

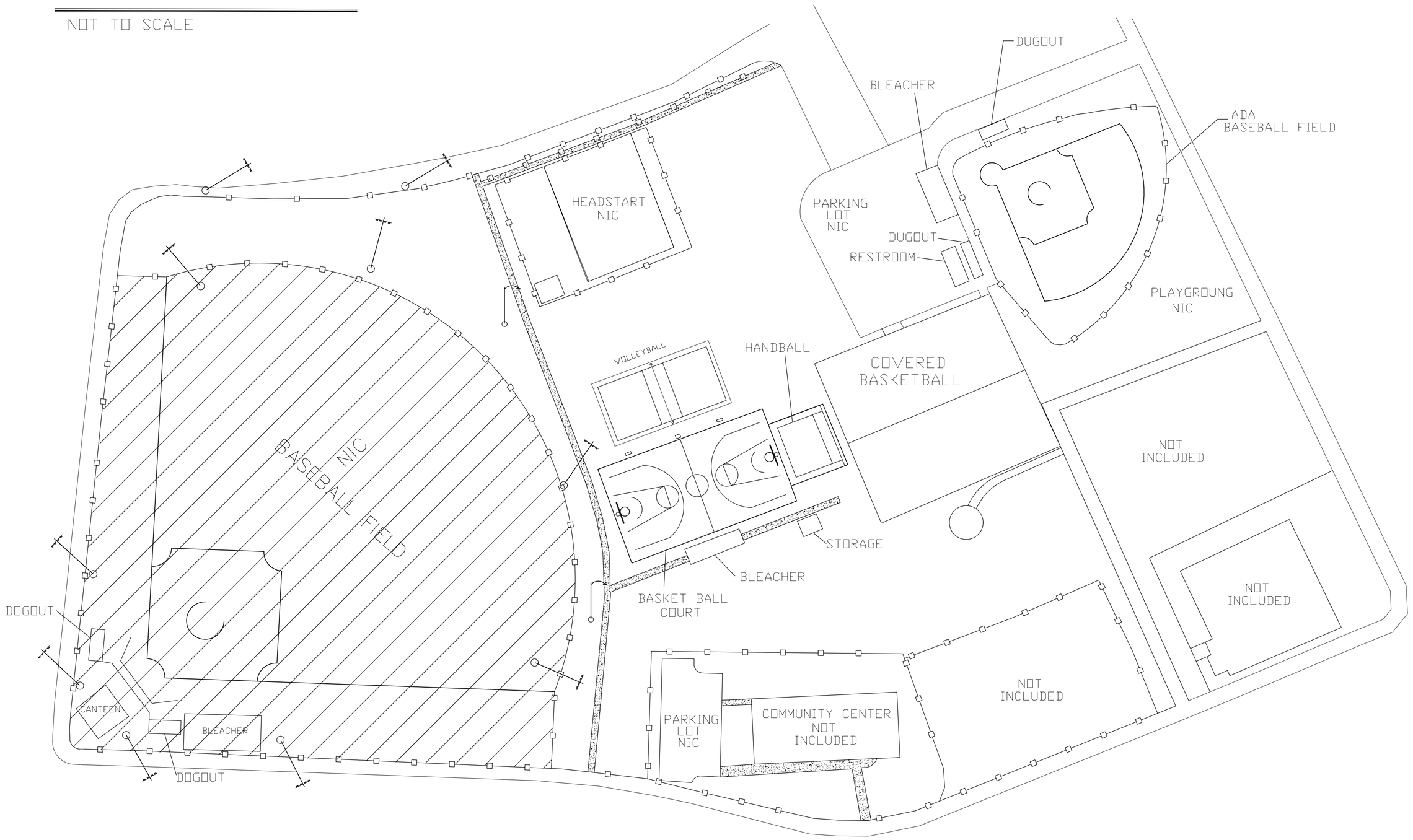

SITE PLAN

NOT TO SCALE

GENERAL NOTES

NOTES:

1- In activities that backfill is required the contractor must use A-2-4 or similar compacted in layers of 6" inches thickness at 95% and been verified by laboratory tests, which will be paid by the contractor.

2. All document included in this bidding process are part of the contract.

3. The contractor shall connect the structure to the existing water and sewer connection services of the site if it where not connected.

4. Demolition and construction disposal will be contractor's responsibility.

5. The contractor will be responsible to implement Plan CEST, PFE (Permiso de Fuente de Emision) and DS3 (Desperdicios Solidos no Peligrosos) as required by the Junta de Calidad Ambiental. (If required)

6. The contractor shall maintained the site clean and free of debris during work in progress.

7. A boundary shall be identified on field to isolated the construction area from the areas that are not impacted. The limit will be defined using a temporary fence that must be provided by the contractor.

8. The contractor will be responsible for all the demolition and debris disposal during the construction. Everything must be coordinated with the Consultant including any foundation demolition if it where the case.

9. "The contractor will plant Soisa Meyer grass in tight squares in all the Green areas affected by the construction.

10. All site dimensions must be verified on site by the contractor.

11. The contractor shall be responsible for any damage cause by the contractor or his employee to the existing infrastructure on the field.

12. All sidewalks finishes shall be broom finish.

13. The contractor shall be familiarized with the existing site conditions before the bidding.

14. The construction site perimeter will be protected with a temporary fence.

15. The contractor will submit a work plan in addition to the cost breakdown for payment for owner's Consultant approval.

16. If applicable any slopes that are generated on the site will not have a slope greater than 1:1 and shall be duly stabilized with Jute or a Similar approved geotextile product and Soysa Meyer grass will be tightly installed for permanent stabilization.

17. The contractor Will familiarize himself with the included Electrical and structural notes and specifications where applicable.

Buy American Act Requirements:

Buy American requirements apply to purchases of iron, steel, and other manufactured products permanently incorporated into infrastructure projects. To be considered as being produced in the U.S., goods must be manufactured in the U.S. and at least 50% of the cost of their components must come from the U.S.

Additional Notes:

1) The contractor is responsible to verify the existing electrical system conditions and shall repair any damage found and leave the project fully operational, properly grounded, coordinated with all the other trades and with all the required equipment, interconnections, fittings, and appurtenances necessary for the safe operation of his intended use.

2) All the electrical installation shall be done in a neat and workmanlike manner, according to the latest edition of the National Electrical Code (N.E.C.), the Puerto Rico Electric Power Authority (LUMA) latest standards and the Negociado de Telecomunicaciones de Puerto Rico latest practices.

3) The contractor shall visit the job site and become acquainted with the existing field conditions.

4) The contractor shall submit with the proposal, the proposed Synthetic Acrylic System specifications with the warranty terms and conditions. The system must be equal or similar to the specified and shall comply with a minimum of minimum five (5) year warranty, excluding damages by improper use and wear due to normal use.

5) The contractor is responsible to comply with all laws, regulations, codes, professional licenses required by Municipal, State, Federal and Local laws.

6) To all existing concrete surface (where occur) – All spalling concrete must be repaired. Chip the existing loose concrete and treat the exposed rebar. Clean with a steel brush and apply (equal or similar) Loctite Extend Rust Neutralizer, apply (equal or similar) Sika Armatec – 110 EpoCem and then patch and finish the affected area with Vinyl Concrete Patch. For all product, follow the manufacturer mixing and application recommendations.

7) All basketball court marking paint must be Multisport Court (Basketball and Volleyball) as specified. Where volleyball pole system is missing, the contractor must include the new volleyball net pole system as per specifications.

ON KEY LLC

IMPORTANT NOTICE:

ALL DESIGNS, DRAWINGS AND COPIES ISSUED BY B. QUINONES, ARE PROPERTY OF B. QUINONES, AND CANNOT BE REPRODUCED OR EXHIBITED IN ANY MANNER OR PLACE EXCEPT FOR THE PURPOSE OF ITS DESIGN INTENT OR BY WRITTEN CONSENT OF B. QUINONES. IF FOR ANY REASON, PART OR ALL OF THE B. QUINONES DESIGN IS ISSUED OR BUILT WITHOUT B.QUINONES CONSENT, THE PARTIES INVOLVED SHALL PAY B. QUINONES FEE IN FULL.

Project Name and Address:
Urb. El Rosario
Facility Damage Repair
Calle 3
Vega Baja, Puerto Rico

Client Name and Address:
DEPARTAMENTO DE RECREACION Y DEPORTES DE PR
PO Box 9023207 San Juan
PR 00902-3207
Tel. (787) 721 2800 Fax: (787) 268-1545
www.drd.pr.gov

Design by: B. QUINONES

No.	Revision/Issue	Plot Date:

Brendaly Quiñones Villodas
Ingeniero
Licenciado
Lic. 17715 PE
Puerto Rico
Fecha de Expiración: 2024-08-10
HARD COPY
SIGNATURE AND SEAL
ENG. BRENDALY QUINONES Lic. # 17715

DRD
DEPARTAMENTO DE RECREACIÓN Y DEPORTES

PO Box 9023207
San Juan PR
00902-3207

In this Page:

EXISTING AND DEMOLITION SITE PLAN

Scale:	Details scale:
NOT TO SCALE	AS NOTED

Job #: 2023-000502
Date: MAR 12, 2024
Check by: AUG 19, 2024
Sheet No.
SI-01

PROPOSED SCOPE OF WORK

A *Facility Damage – Multisport Court Bleachers - New Canopy*

1) Spalling Concrete - Repair concrete bleacher sections:
   a. Chip existing loose concrete and treat the exposed rebar. Clean exposed rebar with a steel brush and apply Loctite Extend Rust Neutralizer.
   b. Apply bonding primer and reinforcement corrosion protection.
   c. Clean, patch and finish the affected area with Vinyl Concrete Patch.
2) Paint existing bleachers. See paint notes.
3) Dimensions: 10' d x 35' l x 63" h. One (1) ea.
4) Demolition and disposal of existing concrete pole base in front of bleachers and concrete bench remains on the opposite side. Approximately 1 CY.
5) Demolition and disposal of existing fallen athletic pole base behind the bleachers. Approximately 1 CY.
6) Supply and install new 2" diameter steel handrails on the laterals and rear of the bleachers. Meet the standard height. See details. 55 LF.
7) Construct new metal roof structure for the bleachers area. 14' x 39'. Approximately 546 SF. See Details.
8) Install new knotless .75"_ #420, 2mm, TS-135LB, 100% nylon with enhanced UV treatment. (546 SF Approx.)
9) Demolish, dispose, and replace existing concrete sidewalks 4 FT, 5 FT, 6 FT and 10 FT sections. The contractor must consider 1750 SF Approx. Sections will be selected on site. See construction details.




B *Facility Damage - Multisport Court Concrete Table and Benches*

1) Spalling Concrete- Chip existing loose concrete and treat the exposed rebar. Clean exposed rebar with a steel brush and apply Loctite Extend Rust Neutralizer.
2) Apply bonding primer and reinforcement corrosion protection.
3) Patch and finish the affected area with Vinyl Concrete Patch.
4) Supply and install a new precast concrete park bench. 6' L x 16" W x 8" H. Four (4) ea.
5) Precast concrete park bench made of Portland Cement (ASTM C150, all aggregates meet ASTMC33) reinforced with 3/8" diameter steel rebar.
6) Paint concrete benches with exterior wall paint. See paint notes. Four (4) ea.



C *Facility Damage – Multisport Court Restrooms Structure – To be used as Storage*

1) Spalling concrete repair - Chip existing loose concrete and treat the exposed rebar. Clean exposed rebar with a steel brush and apply Loctite Extend Rust Neutralizer.
2) Apply bonding primer and reinforcement corrosion protection.
3) Patch and finish the affected area with Vinyl Concrete Patch.
4) Dimensions: 12' w x 18' l.
5) Remove, supply, and repair by replacement of steel doors. 33" w x 78" h. Two (2) ea. Equal to existing.
6) Pressure wash cleaning of existing concrete roof. 216 SF.
7) Installation of new waterproofing system. 216 SF. Equal or similar to Danosa RM-5 modified bitumen membrane. The contractor shall provide a 10 YR warranty. Installation of product must be as recommended by the manufacturer.




D *Facility Damage – Volleyball Grass Field*

1) Supply and install new volleyball net poles. Two (2) ea. 4" Diam. X 12 FT Steel Pipe with cap. 18" Diam Concrete footing 4 ft depth.
2) Paint volleyball net poles. Two (2) ea.
3) See paint notes in general specifications.



E *Facility Damage – Volleyball Grass Field Vegetative Debris*

1) Remove approximately 5 CY of vegetative debris.



F *Facility Damage – Handball Court*

1) Paint handball court wall. Protect existing mural.
2) See paint in general specifications.



G *Facility Damage – ADA League Baseball Field Bleachers*

1) Repair concrete bleacher sections (Spalling Concrete):
   a. Chip existing loose concrete and treat the exposed rebar. Clean exposed rebar with a steel brush and apply Loctite Extend Rust Neutralizer.
   b. Apply bonding primer and reinforcement corrosion protection.
   c. Clean, patch and finish the affected area with Vinyl Concrete Patch.
2) Paint existing bleachers. See paint notes. Paint all existing painted surfaces, unless otherwise noted.
3) Dimensions: 12' w x 32' l x 76" h. One (1) ea.
4) Remove, supply, and repair by replacement of existing damaged metal roof panels by Galvalume panels Ga 24 and repair existing structure for the bleachers. 12' w x 32' l. One (1) each. 384 SF in total approx. Install new C8 x 3.5" Ga 14 sections 192 LF total approx. See Details.
5) Install new edge trim 56 LF Approx.
6) Install new gutter 32 LF Approx. Install new downspout (45 LF Approx.)
7) Install new knotless .75"_ #420, 2mm, TS-135LB, 100% nylon with enhanced UV treatment. (384 SF Approx.)



H *Facility Damage – ADA League Baseball Field Dugouts*

1) Chip existing loose concrete and treat the exposed rebar. Clean exposed rebar with a steel brush and apply Loctite Extend Rust Neutralizer.
2) Apply bonding primer and reinforcement corrosion protection.
3) Patch and finish the affected area with Vinyl Concrete Patch.
4) Seating Dimensions: 4' w x 22' l x 32" h. Two (2) ea
5) Remove, supply, and repair by replacement of existing damaged metal roof panels for the dugouts and repair existing structure. 10' w x 22' l. Two (2) ea. 440 SF in total. Install new C8 x 3.5" Ga 14 sections 100 LF total approx.. See Details.
6) Paint existing bleachers. See paint notes. Paint all existing painted surfaces, unless otherwise noted.
7) Install new edge trim 80 LF Approx.
8) Install new gutter 70 LF Approx. Install new downspout (60LF Approx.)
9) Install new knotless .75", #420, 2mm, TS-135LB, 100% nylon with enhanced UV treatment. (440 SF Approx.)

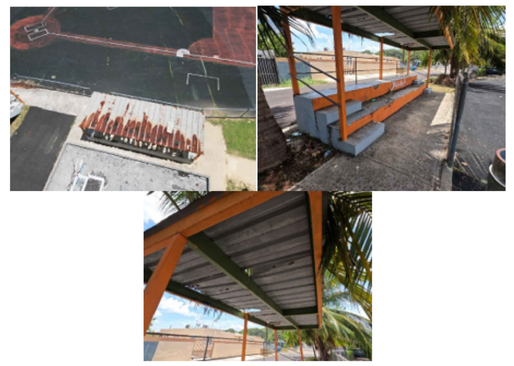

I *Facility Damage – ADA League Baseball Field Restrooms Structure*

1) Spalling Concrete repairs - Chip existing loose concrete and treat the exposed rebar. Clean exposed rebar with a steel brush and apply Loctite Extend Rust Neutralizer.
2) Apply bonding primer and reinforcement corrosion protection.
3) Patch and finish the affected area with Vinyl Concrete Patch.
4) Dimensions: 12' w x 24' l.
5) Pressure wash cleaning of existing concrete roof. 288 SF.
6) Installation of new waterproofing system. 288 SF. Equal or similar to Danosa RM 5 modified bitumen membrane. The contractor shall provide a 10 YR warranty. Installation of product must be as recommended by the manufacturer.
7) Replace existing 24" x 24" Jalousie Aluminum Window.
8) Replace existing door lock – 2 ea. – Heavy duty commercial, stainless steel satin finish, privacy keyed, level handle door lock.



9) Remove and dispose of all restroom equipment: two (2) toilets, two (2) lavatories, one (1) urinal, and accessories.
10) Supply and install new ADA complaint restroom equipment and accessories. Include all fittings, valve, p-trap, tail piece, etc.
11) Remove, dispose, and replace toilet fixture. Include toilet seats, fittings, and valve. Ensure the fixture fits in the existing sanitary connection.
12) Material Description:(where occur or required):
   a. Lavatory: Wall-mounted. Vitreous China, white, 20-½ in x 18-¼ in with 4 in center faucet holes, front overflow, D-shaped bowl. Two (2) lavatories are needed.
   b. Faucets: Conventional widespread, 0.5 GPM pressure compensating, vandal-resistant multi-laminar spray. Factory set for a maximum of 0.08 gallons per cycle. Two (2) faucets are needed.
   c. Toilet Paper Dispenser: Surface-mounted, multi-roll, stainless steel, satin finish, 6-1/16" W x 11" H x 5-15/16" D. Holds two rolls up to 5-¼" in diameter. Theft–resistant, heavy-duty spindles. Two (2) toilet paper dispensers are needed.
   d. Floor: Refer to paint scope section for details. If apply.
   e. Toilets: Single flush. Flush volume is 1.1 GPF to 1.28 GPF. Elongated. ADA Compliance. Chair Height.
   f. Urinals: Low consumption, 1.0 gallon per flush (1.0 gpf/3.8 Lpf). Siphon jet flush action. Extended sides for privacy, vitreous China. One (1) urinal is needed.
   g. Product Reference: (where occur or required):
      a. Lavatory: Equal or similar to American Standard, Lucerne Wall Hung Lavatory Model 0355.012.
      b. Faucets: Equal or similar to American Standard Metering Faucet Model1340.827.
      c. Toilet Paper Dispenser: Equal or similar to Bobrick Model B-2888 Classic Series.
      d. Floor: Refer to paint scope section for details.
      e. Toilets: Similar or equal to American Standard CADET® PRO™ RIGHT HEIGHT® ELONGATED TOILET
      f. Champion Two-Piece Single Flush Elongated Chair Height Toilet with Slow-Close Seat in White
      g. Urinals: Similar or equal to KOHLER Dexter 0.125 GPF Urinal with Top Spud in White Model # K-5452-ET-0.
      h. American Standard - Ultima Manual FloWise 0.125 GPF Exposed Urinal Flush Valve in Polished Chrome for 0.75 in. Top Spud

A *Facility Damage – ADA League Baseball Field Chain Link Fence*

1) Remove and dispose of existing damaged 4' high chain link fence sections around the field. Approximately 200 LF.
2) Supply and install new 4' high chain link fence sections around the field. Approximately 200 LF.
3) Supply and install a new fence topper all along the perimeter of the all fence. Equal or similar to model 01160 Poly-Cap by Baseball Fence Toppers. Approximately 475 LF.
4) Paint all remaining perimeter fence. See paint note.



J *Facility Damage – ADA League Baseball Field and Playground Area Vegetative Debris*

1) Remove approximately 3 CY of vegetative debris.
2) 30% Prune trees around the field. Twelve (12) ea.



K *Facility Damage – Covered Basketball Court Roof Structure*

1) Remove, supply and repair by replacement of metal roof side panels 3' w x 10' l. Ten (10) ea. (300 SF)
2) Remove, supply and repair by replacement of metal roof panels 3' w x 55' l. (25) ea. (4125 SF) and install new ridge panel (690 SF). Seal all existing panel perforations with a sealant equal or similar to Titebond WeatherMaster Metal Roof Sealant.
3) Remove, supply and repair by replacement of gutters. Approximately 230 LF.
4) Remove, supply and repair by replacement of downspouts. Approximately 22' long. Eight (8) ea. Approximately 176 LF.
5) Remove, supply and repair by replacement of trims. Approximately 220 LF.
6) Remove, supply and repair by replacement of Edge Corner trims. Approximately 40 LF.
7) Paint entire structure, inside and outside including siding. with exterior wall paint, equal or similar to Sherwin-Williams Quick Dry Interior/Exterior Stain Blocking Primer. Apply one coat of primer. Apply two (2) coats of paint. A-100 exterior acrylic latex. Use DTM Paint for siding.
8) Building dimensions: 102, w x 115' l.



L *Facility Damage – Covered Basketball Court Roof Structure – Interior*

1) Remove, supply and repair by replacement of existing intermediate z10 galv Ga 14 steel purlin sections. (580 LF)
2) Remove, supply and repair by replacement of existing edge z10 galv Ga 14 steel purlin sections. (250LF)
3) Paint New purling section to match existing.

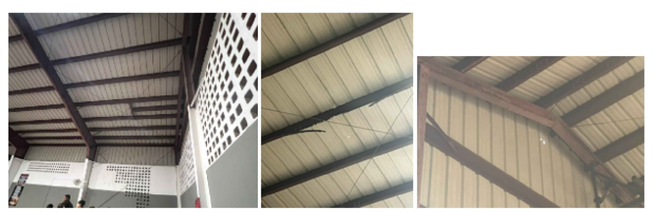

4) Clean and paint all interior concrete structure (Court, Office, Canteen, Restrooms) 21,200 SF Approx.
5) Replace existing wall ceramic tile section 100 SF. Use Ceramic Tile Equal or similar to Jeffrey Court - Grande Azulado Rustico 10 in. x 20 in. Subway Gloss Ceramic Wall Tile.

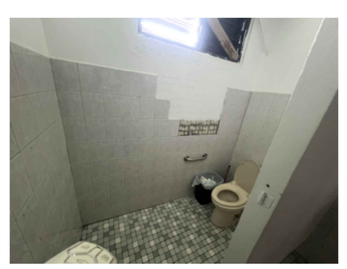

* Paint Interior Exterior including court marking re-touch with paint. Paint existing Outdoor Gym equipment.

ON KEY LLC

IMPORTANT NOTICE:

ALL DESIGNS, DRAWINGS AND COPIES ISSUED BY B. QUINONES, ARE PROPERTY OF B. QUINONES, AND CANNOT BE REPRODUCED OR EXHIBITED IN ANY MANNER OR PLACE EXCEPT FOR THE PURPOSE OF ITS DESIGN INTENT OR BY WRITTEN CONSENT OF B. QUINONES. IF FOR ANY REASON, PART OR ALL OF THE B. QUINONES DESIGN IS ISSUED OR BUILT WITHOUT B.QUINONES CONSENT, THE PARTIES INVOLVED SHALL PAY B. QUINONES FEE IN FULL.

Project Name and Address:
Urb. El Rosario
Facility Damage Repair
Calle 3
Vega Baja, Puerto Rico

Client Name and Address:
DEPARTAMENTO DE RECREACION Y DEPORTES DE PR
PO Box 9023207 San Juan
PR 00902-3207
Tel. (787) 721-2800 Fax: (787) 268-1545
www.drd.pr.gov

Design by: B. QUINONES

No.	Revision/Issue	Plot Date:

Brendaly Quiñones Villodas
Ingeniero
Licenciado
Lic. 17719 PE
Puerto Rico
Fecha de Expiración: 2024-06-10
HARD COPY
SIGNATURE AND SEAL
ENG. BRENDALY QUIÑONES Lic. # 17719

DRD
DEPARTAMENTO DE RECREACIÓN Y DEPORTES

PO Box 9023207
San Juan PR
00902-3207

In this Page:
PROPOSED SCOPE OF WORK

Scale: NOT TO SCALE
Details scale: AS NOTED

Job #: 2023-000502
Date: MAR 12, 2024
Check by:AUG 19, 2024
Sheet No.
A-01

PROPOSED SCOPE OF WORK

(M) *Facility Damage – Small Concrete Pole and Benches*

1) Demolition and disposal of existing small concrete pole in the west side of the covered basketball court structure. Approximately 1 CY in.
2) Demolish and dispose of existing column and damaged wooden bench remains. Four (4) ea. Approximately 2CY.
3) Supply and install new precast concrete park benches. 72" L x 20" W x 18" H. Four (4) ea.
4) Precast concrete park bench made of Portland Cement (ASTM C150, all aggregates meet ASTMC33) reinforced with 3/8" diameter steel rebar.
5) Install Thin set concrete resurfacing of existing roundabout sidewalk. Equal or similar to NewCrete concrete Resurfacer by Rapid Set. Pressure wash before installation.



(Q) *Facility Damage Electrical – Property Concrete Poles*

1) Removal of existing damaged concrete poles. 20' high. Two (2) ea.



(S) *Facility Damage Electrical – Outdoor Basketball Court - Multisport Court (Basketball / Volleyball / Handball / walking path)*

As part of field lighting system, the contractor must consider the following:

A) Removal of existing lighting poles One (1 ea).
B) Remove, supply and install new distribution panel LPB, Disconnect Switch and Control Link.
C) The contractor must re-use the existing lighting system wiring. Unless otherwise noted.
D) All electrical installation must be done as per the code and regulations, and the contractor must provide an electrical certification to the owner.
E) The contractor must consider One (1) poles of 50 FT, five (5) luminaries Equal or similar to two (2) – model TLC-LED-550, and three (3) – model TLC-LED-900 including one (1) precast self-support concrete pole base. All athletic poles must be grounded. (1ea).
F) The contractor must install new 3-#4 RHHN underground electrical wiring. Use 2in min. diameter PVC SCHD. 40 conduits. See trench detail. (955 LF Approx.)
G) The contractor must consider a dedicated circuit breaker per each pole.
H) The contractor must consider two (2) Pull boxes.
I) See drawings.





(N) *Facility Damage – Playground Equipment*

1) Remove and dispose of existing damaged playground equipment. One (1) swing, and One (1) seesaw.
2) Supply and install new 10' freestanding metal slide:
   a. Stainless steel bed way, 18 gauge, secured to a 4" deep "D" shaped side rails.
   b. Safety platform of 22" x 22" square, 14-gauge galvanized steel.
   c. Handrails of 1.315" O.D. galvanized steel.
   d. Meets ASTM and CPC guidelines.
   e. One (1) ea.
3) Supply and install new four (4) seat seesaw:
   a. Pipe Arm: 5" diameter, galvanized pipe, powder coated paint finish.
   b. Handles / Footrests: Formed from 1- ¼" galvanized pipe, powder coated.
   c. Seats: Molded polyethylene.
   d. Hardware / Nuts and Bolts: Stainless steel.
   e. Unit size 10' L x 8' W x 1.5' H.
   f. Safety area 22' L x 20' W.
   g. Age range: 3-12 years.
   h. Kids Capacity: 4 kids.
   i. Concrete Pedestal:12" x 12" X 18".
   j. Weight: 220 lbs.
   k. ADA Compliant.
   l. One (1) ea.
4) Supply and install new swing set:
   a. Basic Commercial Belt Swing Seat with 8'6" Plastisol Chain.
   b. Swing Seat is 6" x 24" EPDM rubber.
   c. High carbon steel spring inserts for strength and vandal resistance.
   d. Sturdy galvanized triangle hardware riveted to seat.
   e. The chain is 8'6" (102") in length and is partially plastisol coated for 30".
   f. Recommended chain length for swing beams that are 10-12 ft tall.
   g. Chain comes assembled to swing with commercially rated S-Hooks.
   h. One (1) ea.
5) Supply and install new monkey bars:
   a. Vertical ladder frames are fabricated from 5" O.D.
   b. 10-gauge galvanized steel tubing with 1-3/4" O.D.
   c. Weld assembly shall be powder coated after fabrication.
   d. Steel tubing rungs are 1-3/4" O.D. 14.
   e. Weight: 220 lbs.
   f. One (1) ea.
6) Equal or similar to Playset Parts product.

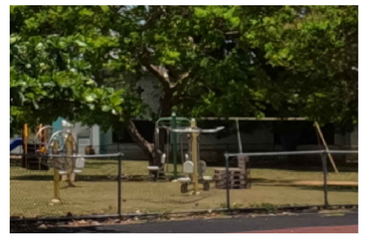

(T) *Facility Damage Electrical – Outdoor Basketball Court - Concrete Bleachers Canopy*

1) Supply and install new florescent lighting fixture with new LED lighting fixtures equal or similar to CNY LED Canopy Lighting by Lithonia Lighting. Include rough-in, wiring, electrical connection, and on/off switch panel. Include all switches and covers. Installation as recommended by the manufacturer. Two (2) ea. Connect to new distribution panel LPB. Use 3#12, 3/4" PVC SCHD. 40 conduit.

a. LED Interior/Exterior Luminaire.
b. Color Temp of 4000k.
c. Fixture Voltage: 120 to 277VS
d. LED replacement for: Up to 250W MH
e. Lumens: 6,600 lm
f. Fixture Rated Life: 50,000 hr. Five (5) year warranty.



(O) *Paint General Specifications*

1) Paint all existing structures. (Bleachers, benches, steel structures, concrete structures, buildings, restrooms, canteen, basketball court, etc., where occur).
2) Clean and patch all existing concrete surfaces. See paint notes.
3) Product Description:
   a. Steel Structures: Equal or similar to Sherwin Williams Pro Industrial DTM Acrylic Primer/Finish. Apply one coat of primer and two (2) coats of paint.
   b. Exterior Wall Paint: Equal or similar to Sherwin-Williams Quick Dry Interior/Exterior Stain Blocking Primer. Apply one coat of primer. Apply two (2) coats of paint. A-100 exterior acrylic latex.
   c. Interior Wall Paint: Equal or similar to Sherwin-Williams Moisture Vapor Barrier Interior Latex primer/sealer. Apply one coat of primer and two (2) coats of paint. Promar 400 Zero VOC Interior Latex Primer.
   d. Floors: Similar or equal to American Safety Technologies AS-150 HAPS Free Anti-Slip Coating
   e. All exterior concrete structure or item must be painted with exterior paint.
   f. See paint notes on drawings.
4) Patch and finish the affected area with Vinyl Concrete Patch.



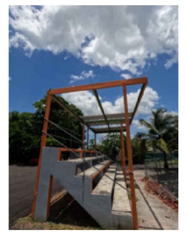





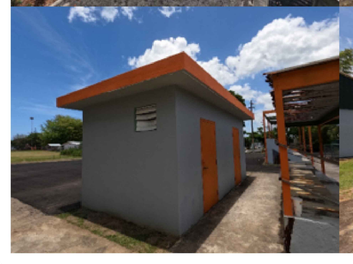



(U) *Facility Damage Electrical – Covered Basketball Court Roof Structure (Exterior)*

1) Remove, supply and repair by replacement of exterior lighting fixtures for the west, south and east sides of the building structure. Eight (8) ea. Equal or similar to model ValueLED Area Light 3A by SYLVANIA Luminaires. Include rough-in, wiring, electrical connection, and on/off switch panel. Installation as recommended by the manufacturer. Connect to new distribution panel LPB. Use 3#12, 3/4" PVC SCHD. 40 conduit.
   a. LED exterior luminaire.
   b. Color Temp of 5000k.
   c. Fixture Voltage: 120 to 277V
   d. Lumens: 20,000 lm
   e. Fixture Rated Life: 100,000 hr. Five (5) year warranty.





(P) ***SOW ELECTRICAL WORK***

Facility Damage Electrical - ADA Baseball Field Poles

ADA Baseball Field Lighting System

As part of field lighting system, the contractor must consider the following:

A) Removal of existing lighting poles Two (2ea). The installation of a new distribution panel, equal or similar to model GE Load Center: 125 Amps, 120/240V AC, 24 Spaces, 22kA, NEMA 3R Combo Flush/Surface, Main Circuit Breaker. Item 32WT01Mfr. Model TM2412RCU, to be installed next to the existing meter base located against west wall of the covered basketball court.
B) The contractor must install a control panel equal or similar to MUSCO control link contactor cabinet system, next to existing meter base located against west wall of the covered basketball court.
C) The contractor must re-use the existing lighting system wiring.
D) All electrical installation must be done as per the code and regulations, and the contractor must provide an electrical certification to the owner.
E) **The contractor must consider Two (2) poles of 60 FT, four (4) luminaries Equal or similar to Four (4) – model TLC-LED-1200, including two (2) precast self-support concrete pole base. All athletic poles must be grounded. (2ea).**
F) The contractor must install new 3-#4 RHHN underground electrical wiring. Use 2in min. diameter PVC SCHD. 40 conduits. See trench detail. (300 LF Approx.)
G) The contractor must consider a dedicated circuit breaker per each pole.
H) The contractor must consider two (2) Pull boxes.
I) See drawings.

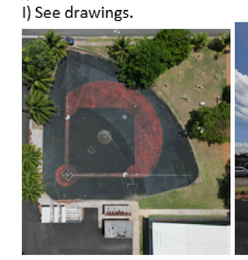

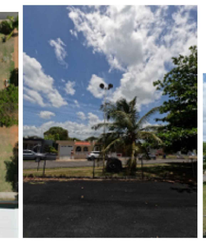



(R) *Facility Damage Electrical – Bleacher Canopy and Canteen/Restroom- Baseball Field*

1) Supply and install new florescent lighting fixture with new LED lighting fixtures equal or similar to CNY LED Canopy Lighting by Lithonia Lighting. Include rough-in, wiring, electrical connection, and on/off switch panel. Include all switches and covers. Installation as recommended by the manufacturer. Two (2) ea. Connect to new distribution panel LPA. Use 3#12, 3/4" PVC SCHD. 40 conduits. (Bleacher). Include photocell.

a. LED Interior/Exterior Luminaire.
b. Color Temp of 4000k.
c. Fixture Voltage: 120 to 277VS
d. LED replacement for: Up to 250W MH
e. Lumens: 6,600 lm
f. Fixture Rated Life: 50,000 hr. Five (5) year warranty.

2) Supply and install of exterior lighting fixtures at the roof of Canteen/Restroom structure. Three (3) ea. Equal or similar to model Value LED Area Light 3A by SYLVANIA Luminaires. Include rough-in, wiring, electrical connection, and on/off switch panel. Installation as recommended by the manufacturer. Connect to new distribution panel LPA. Use 3#12, 3/4" PVC SCHD. 40 conduit. Include photocell.

a. LED exterior luminaire.
b. Color Temp of 5000k.
c. Fixture Voltage: 120 to 277V
d. Lumens: 20,000 lm
e. Fixture Rated Life: 100,000 hr. Five (5) year warranty.

(V) *Facility Damage Electrical – Bleacher and Dugouts Canopy -ADA Baseball Field*

1) Supply and install new florescent lighting fixture with new LED lighting fixtures equal or similar to CNY LED Canopy Lighting by Lithonia Lighting. Include rough-in, wiring, electrical connection, and on/off switch panel. Include all switches and covers. Installation as recommended by the manufacturer. Two (2) ea. per canopy, Six (6 ea. Total) Connect to new distribution panel LPA. Use 3#12, 3/4" PVC SCHD. 40 conduits. Include photocell.

a. LED Interior/Exterior Luminaire.
b. Color Temp of 4000k.
c. Fixture Voltage: 120 to 277VS
d. LED replacement for: Up to 250W MH
e. Lumens: 6,600 lm
f. Fixture Rated Life: 50,000 hr. Five (5) year warranty.

ON KEY LLC

IMPORTANT NOTICE:
ALL DESIGNS, DRAWINGS AND COPIES ISSUED BY B. QUINONES, ARE PROPERTY OF B. QUINONES, AND CANNOT BE REPRODUCED OR EXHIBITED IN ANY MANNER OR PLACE EXCEPT FOR THE PURPOSE OF ITS DESIGN INTENT OR BY WRITTEN CONSENT OF B. QUINONES. IF FOR ANY REASON, PART OR ALL OF THE B. QUINONES DESIGN IS ISSUED OR BUILT WITHOUT B.QUINONES CONSENT, THE PARTIES INVOLVED SHALL PAY B. QUINONES FEE IN FULL.

Project Name and Address:
Urb. El Rosario
Facility Damage Repair
Calle 3
Vega Baja, Puerto Rico

Client Name and Address:
DEPARTAMENTO DE RECREACION Y DEPORTES DE PR
PO Box 9023207 San Juan
PR 00902-3207
Tel. (787) 721-2800 Fax: (787) 268-1545
www.ddf.pr.gov

Design by: B. QUINONES

No.	Revision/Issue	Plot Date:

Brendaly Quiñones Vilodas
Ingeniero Licenciado
Lic. 17715 PE
Puerto Rico
Fecha de Expiración: 2024-05-10
HARD COPY
SIGNATURE AND SEAL
ENG. BRENDALY QUINONES Lic. # 17715

DRD
DEPARTAMENTO DE RECREACIÓN Y DEPORTES
PO Box 9023207
San Juan PR
00902-3207

In this Page:
PROPOSED SCOPE OF WORK CONT.

Scale: 1" = 1/32"
Details scale: AS NOTED

Job #: 2023-000502
Date: MAR 12, 2024
Check by: AUG 19, 2024
Sheet No.
A-02

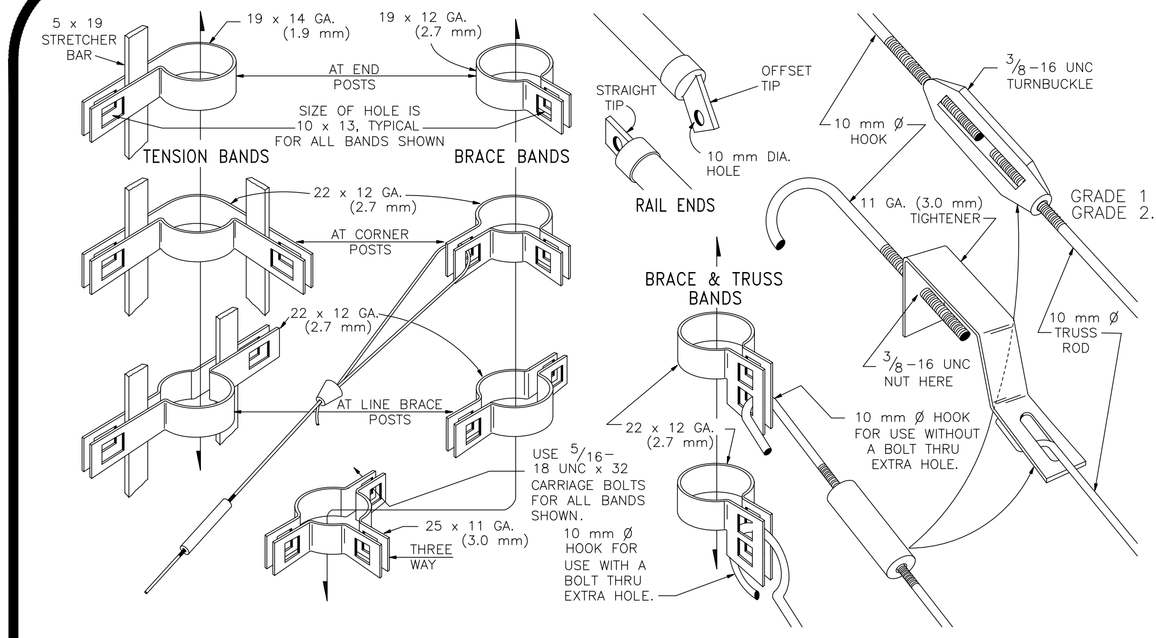

BANDS, RAIL ENDS & TIGHTENERS (DIMENSIONS SHOWN ARE MINIMUMS)

GENERAL NOTES

"H" (HEIGHT OF FABRIC) SHALL 3.048 M.

CHAIN LINK FENCE SHALL CONFORM TO THE REQUIREMENTS OF AASHTO M 181.

CHAIN LINK FABRIC SHALL BE 50 mm MESH NO. 9 GAGE (3.76mm) GALVANIZED OR ALUMINUM COATED WIRE SECURELY FASTENED TO TENSION WIRE, LINE POSTS, RAILS, BRACES AND STRETCHER BARS SPACED AS SHOWN HEREON. WIRE FASTENERS AND TIE CLIPS SHALL BE NO. 11 GAGE (W&M) (3.05 mm) GALVANIZED STEEL WIRE OR NO. 7 GAGE (B&S) (3.66 mm) ALUMINUM WIRE, AND HOG RINGS SHALL BE NO. 9 GAGE (3.76 mm), ALL IN CONFORMANCE WITH ASTM F 626.

STEEL POSTS, RAILS AND GATE FRAMES SHALL CONFORM TO AASHTO M 181 TYPE 1,

AT THE CONTRACTOR'S OPTION, PIPE USED FOR FENCE CONSTRUCTION SHALL CONFORM TO THE DIMENSIONS AND WEIGHTS FOR EITHER "ORDINARY PIPE" OR " ALTERNATIVE PIPE" . "ALTERNATIVE PIPE" SHALL BE HIGH STRENGTH STEEL PIPE MEETING THE REQUIREMENTS OF FED. SPEC. RR-F-191/3C.

TENSION WIRE SHALL BE CONTINUOUS BETWEEN END OR CORNER POST AND LINE BRACE POST. A TURNBUCKLE OR OTHER APPROVED TIGHTENING DEVICE SHALL BE USED FOR EACH CONTINUOUS SPAN OF TENSION WIRE.

TENSION WIRE SHALL BE AS SPECIFIED IN AASHTO M 181.

CONCRETE FOOTINGS SHALL HAVE TOPS CROWNED AT GROUND LEVEL AND SHALL BE CLASS A. CONCRETE WITH LIGHTWEIGHT AGGREGATE CONFORMING TO AASHTO M 195, WILL BE PERMITTED.

CHAIN LINK FABRIC UP TO 1520 mm HIGH SHALL BE KNUCKLED AT THE TOP AND BOTTOM SELVAGES. FABRIC OVER 1520 mm HIGH SHALL BE TWISTED AND BARBED ON THE TOP SELVAGE AND KNUCKLED ON THE BOTTOM SELVAGE.

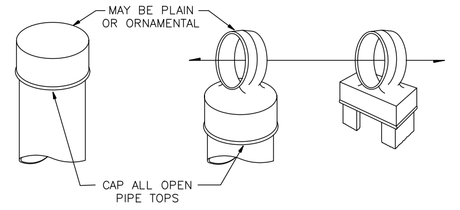

POST TOPS

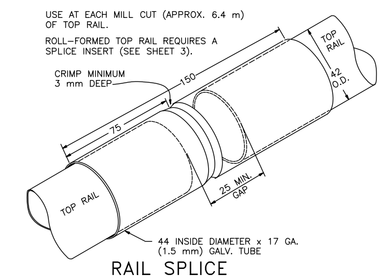

RAIL SPLICE

NOTE:
ALL FOOTING CONCRETE MUST BE 3,000 PSI
ALL STEEL PIPE MUST BE MT 40.

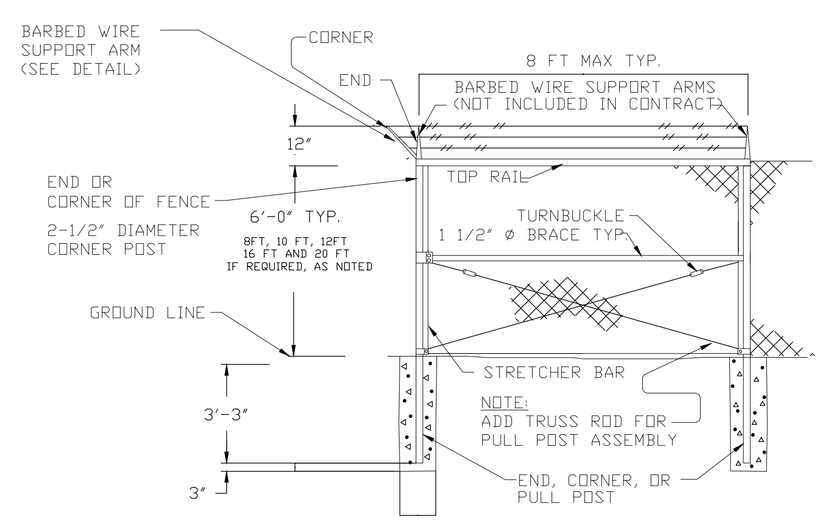

CORNER OR END PANEL ASS'Y
PULL POST ASS'Y SIMILAR (EXCEPT AS INDICATED)

SCALE: NOT TO SCALE

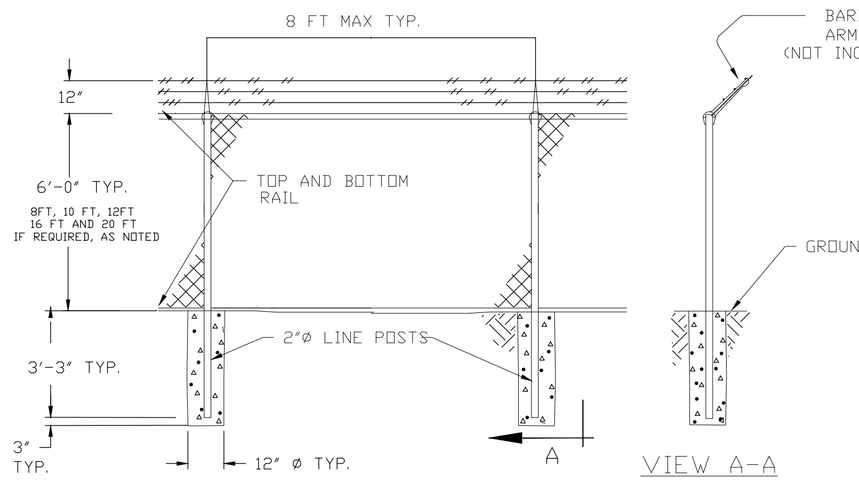

TYPICAL LINE FENCE DETAIL

SCALE: NOT TO SCALE

CHAIN LINK FENCE TYPICAL DETAILS

SCALE: NOT TO SCALE

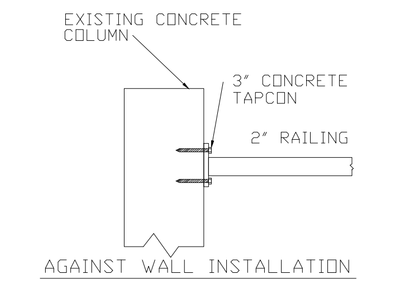

Railing Detail

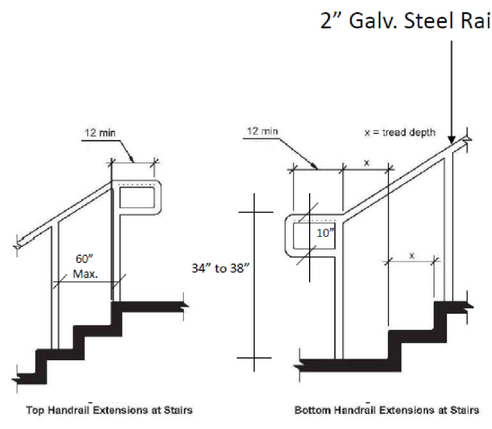

INSTALL NEW HANDRAILS

SCALE: NOT TO SCALE

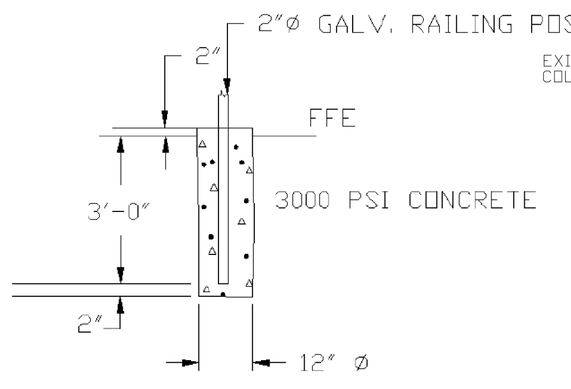

RAILING CCONCRETE BASE

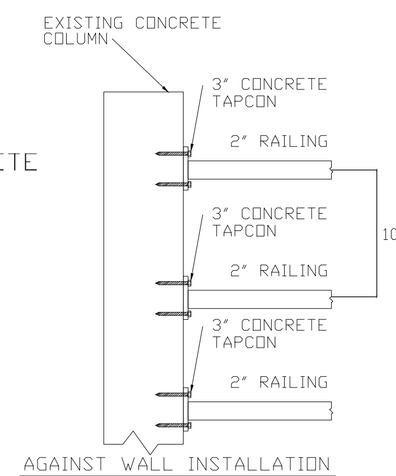

PAINT NOTES:

1. ALL INTERIOR AND EXTERIOR WALLS SHALL BE PAINTED WITH THREE COATS OF PAINT. THE INTERIOR THREE COAT SYSTEM CONSISTS OF A SEALER PRIMER COAT AND TWO FINISH COATS WITH 100 % ACRYLIC LATEX PAINT, EGGSHELL FINISH. EXTERIOR THREE COAT SYSTEM CONSISTS OF A QUICK DRY STAIN BLOKER AND SEALER PRIMER AND TWO FINISH COAT OF 100% ACRYLIC PAINT. COLOR TO BE SELECTED BY THE ENGINEER. PATCH AND REPAIR WITH CONCRETE PLASTER ALL SURFACE IF NECESSARY, BEFORE PAINT.

2. ITEMS NOT TO BE PAINTED WHICH ARE IN CONTACT WITH OR ADJACENT TO PAINTED SURFACES SHALL BE REMOVED OR PROTECTED PRIOR TO SURFACE PREPARATION AND PAINTING OPERATIONS. ITEMS REMOVED PRIOR TO PAINTING SHALL BE REPLACED WHEN PAINTING COMPLETED.

3. EXTERIOR WALL TO BE PAINTED SHALL BE CLEAN WITH WATER BLASTER MACHINE AND BE FREE OF FOREING MATTER BEFORE APPLICATION OF PAINT OR SURFACE TREATMENTS. OIL AND GREASE SHALL BE REMOVED PRIOR TO MECHANICAL CLEANING. CLEANING SHALL BE PROGRAMED SO THAT DUST AND OTHER CONTAMINANTS WILL NOT FALL ON WET, NEWLY PAINTED SURFACES.

4. BLISTERING, CRACKING, FLAKING AND PEELING OR OTHER DETERIORATED COATINGS SHALL BE REMOVED. SLICK SURFACES SHALL BE ROUGHENED. DAMAGED AREAS SUCH AS, BUT NOT LIMITED TO, NAIL HOLES, CRACKS, CHIPS, AND SPALLS SHALL BE REPAIRED WITH SUITABLE MATERIAL TO MATCH ADJACENTS UNDAMAGED AREAS.

5. STEEL STRUCTURE SHALL BE SANDED AND PAINTED WITH ONE ANTI -RUST PRIMER AND TWO COAT OF STOPS RUST INDUSTRIAL WATER BASE ENAMEL PAINT. BLISTERING, CRACKING, FLAKING AND PEELING OR OTHER DETERIORATED COATINGS SHALL BE REMOVED.

6. PAINT EXISTING REMAINING CHAIN LINK FENCE WITH OIL BASE ALUMINUM PAINT.

7. SEE PAINTING SPECIFICATIONS

Existing Spalling Concrete repair (where occur)







- I - Chip the existing loose concrete and treat the exposed rebar. Clean exposed rebar with a steel brush and apply Loctite Extend Rust Neutralizer.

- II- Apply :



Sika® Armatec®-110 EpoCem

BONDING PRIMER AND REINFORCEMENT CORROSION PROTECTION

Sika® Armatec®-110 EpoCem is a cementitious epoxy resin compensated 3-component, solvent-free, coating material with corrosion inhibitor, used as bonding primer and reinforcement corrosion protection.

- ✓ Contains EpoCem® technology - improved bonding agent
- ✓ Extended open times for repair mortars
- ✓ Excellent adhesion to concrete and steel

- III – Patch and finish the affected area with Vinyl Concrete Patch.



EQUAL OR SIMILAR

SPALLING CONCRETE REPAIR

SCALE: NOT TO SCALE

BRENDALY QUIÑONES
PROFESSIONAL ENGINEER
EMAIL: INFO@ONKEYLLC.US
PHONE: 787 -379-0556

IMPORTANT NOTICE:

ALL DESIGNS, DRAWINGS AND COPIES ISSUED BY B. QUIÑONES, ARE PROPERTY OF B. QUIÑONES, AND CANNOT BE REPRODUCED OR EXHIBITED IN ANY MANNER OR PLACE EXCEPT FOR THE PURPOSE OF ITS DESIGN INTENT OR BY WRITTEN CONSENT OF B. QUIÑONES. IF FOR ANY REASON, PART OR ALL OF THE B. QUIÑONES DESIGN IS ISSUED OR BUILT WITHOUT B.QUIÑONES CONSENT, THE PARTIES INVOLVED SHALL PAY B. QUIÑONES FEE IN FULL.

Project Name and Address:
Urb. El Rosario
Facility Repair
Calle 3
Vega Baja, Puerto Rico

Client Name and Address:
DEPARTAMENTO DE RECREACION Y DEPORTES DE PR
PO Box 9023207 San Juan
PR 00902-3207
Tel. (787) 721 2800 Fax: (787) 268-1545
www.drd.pr.gov

Design by: B. QUIÑONES

No.	Revision/Issue	Plot Date:

Brendaly Quiñones Villodas
Ingeniero
Licenciado
Lic. 17715 PE
Puerto Rico
Fecha de Expiración: 2024-08-10
HARD COPY SIGNATURE AND SEAL
ENG. BRENDALY QUIÑONES Lic. # 17715

DRD
DEPARTAMENTO DE RECREACIÓN Y DEPORTES
PO Box 9023207
San Juan PR
00902-3207

In this Page:
PROPOSED DETAILS

Scale: Not To Scale
Details scale: AS NOTED

Job #: 2023-000502
Date: MAY 30, 2023
Check by: AUG 19, 2024
Sheet No.
A-03

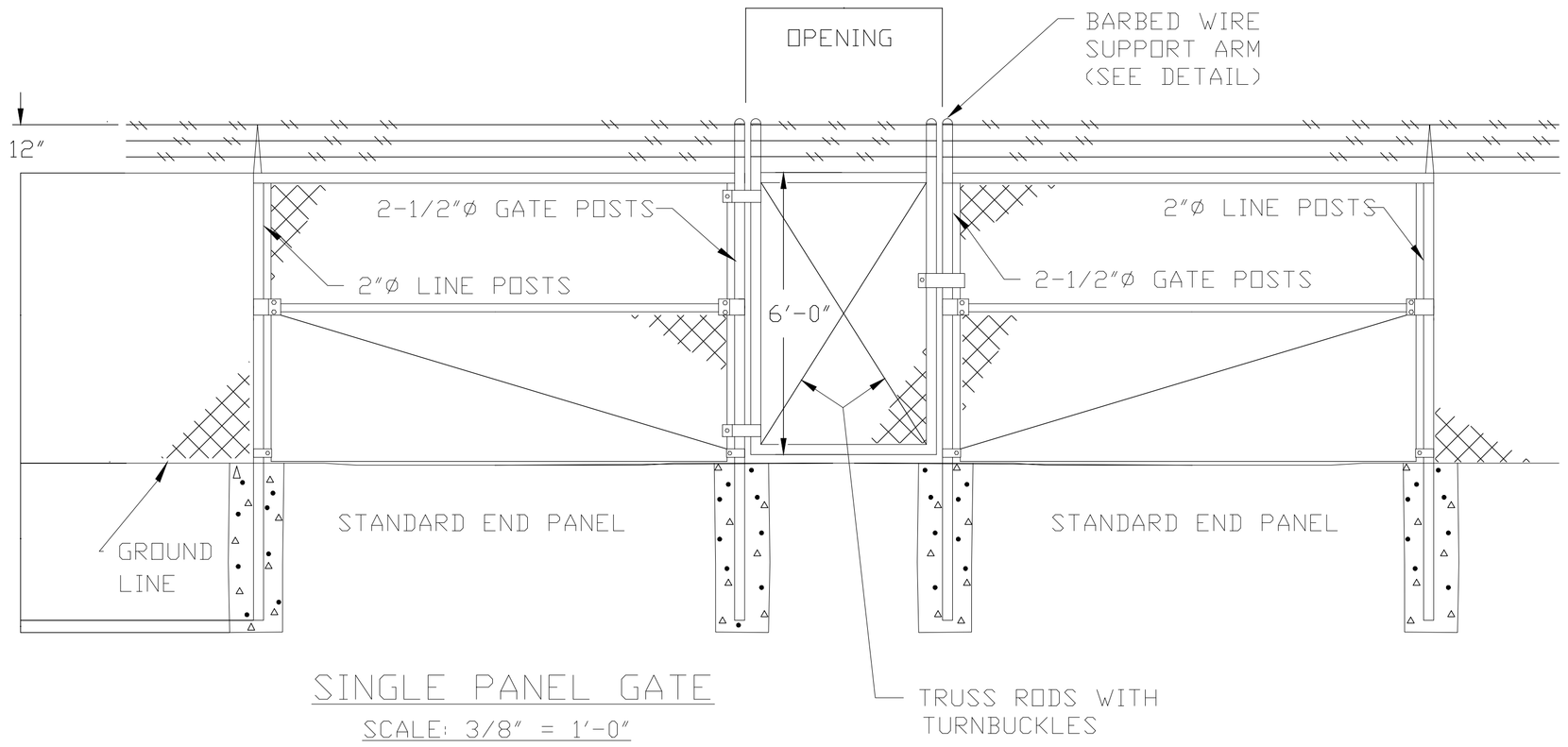

SINGLE PANEL GATE

SCALE: 3/8" = 1'-0"

NOTE:
ALL CONCRETE MUST BE 3,000 PSI

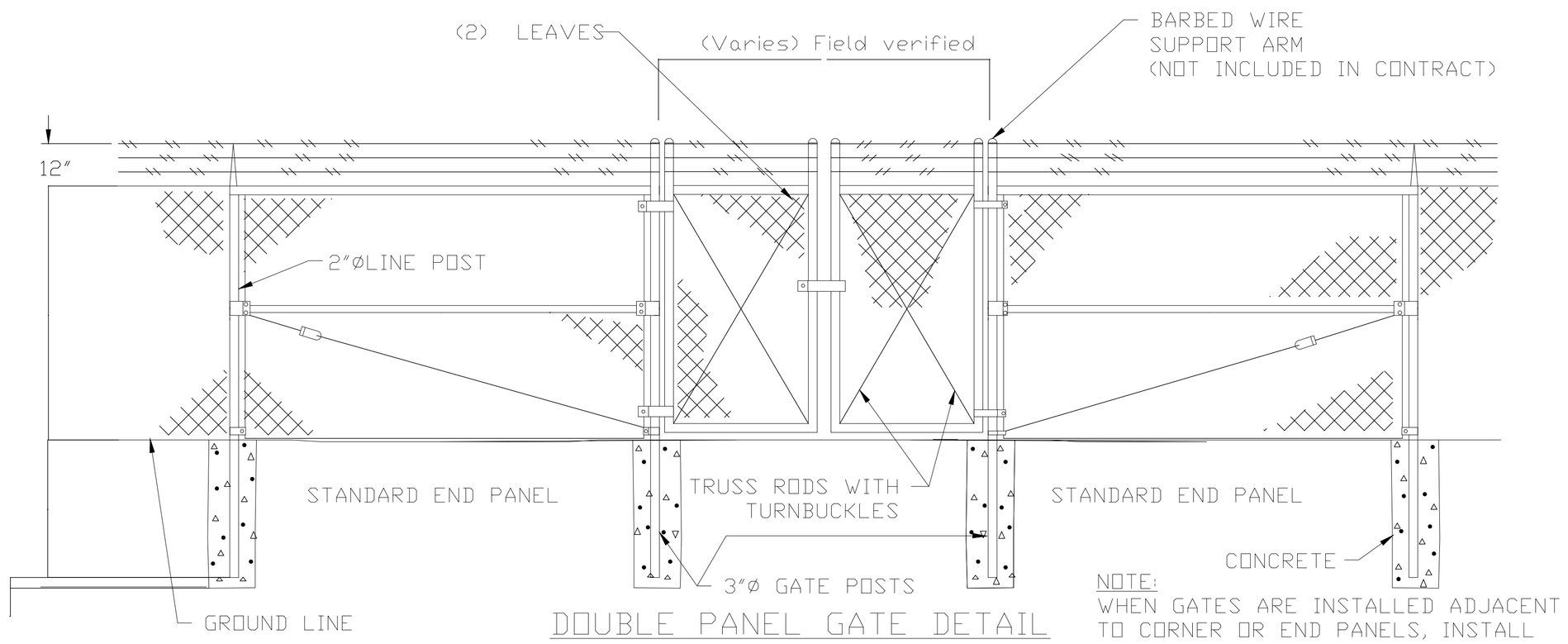

DOUBLE PANEL GATE DETAIL

(TYP. WHERE OCCUR)

NOTE:
WHEN GATES ARE INSTALLED ADJACENT TO CORNER OR END PANELS, INSTALL TRUSS RODS AS IN PULL POST ASSEMBLIES.

BELSON OUTDOORS

Equal or Similar

111 North River Road
North Aurora, IL 60542
Phone: (800) 323-5664
Fax: (630) 897-0573
sales@belson.com

Model # TF5027 — **Dimension Sheet**

Precast Concrete Bench

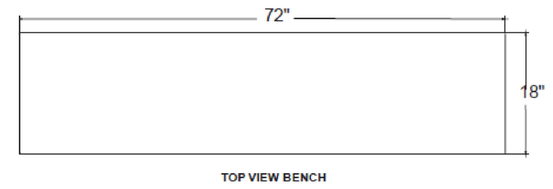

TOP VIEW BENCH

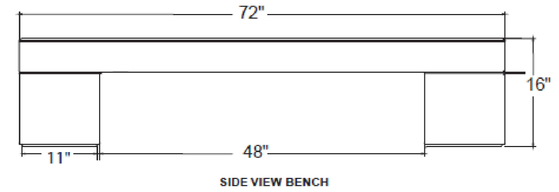

SIDE VIEW BENCH

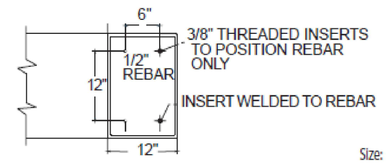

BOTTOM SECTION VIEW

2.2 MATERIALS
A. Portland Cement: ASTM C150 specifications for Portland Cement.
B. Aggregates: All aggregates to meet ASTM C33 specifications, to be cleaned of foreign matter and properly graded to size.
C. Coloring Pigments used shall be inorganic, resistant to alkalinity and used as per manufacturers recommendations.

Size:	72" L x 18" W x 16" H.
Weight:	900 lbs.
Seating Capacity:	5-6 persons.
Material:	Reinforced Precast Concrete.
Reinforcing:	1/2" Dia. steel rebar.
Hardware:	(4) - 3/8" Dia. threaded Inserts.
Anchoring:	Optional
Maintenance:	Periodically rinse with water & mild detergent, and re-seal annually.
Packaging:	Banding to pallet optional. One piece construction

NEW 6 FT BENCH

NOT TO SCALE

ON KEY LLC

BRENDALY QUINONES
PROFESSIONAL ENGINEER
EMAIL: INFO@ONKEYLLC.US
PHONE: 787 -379-0556

IMPORTANT NOTICE:
ALL DESIGNS, DRAWINGS AND COPIES ISSUED BY B. QUINONES, ARE PROPERTY OF B. QUINONES, AND CANNOT BE REPRODUCED OR EXHIBITED IN ANY MANNER OR PLACE EXCEPT FOR THE PURPOSE OF ITS DESIGN INTENT OR BY WRITTEN CONSENT OF B. QUINONES. IF FOR ANY REASON, PART OR ALL OF THE B. QUINONES DESIGN IS ISSUED OR BUILT WITHOUT B.QUINONES CONSENT, THE PARTIES INVOLVED SHALL PAY B. QUINONES FEE IN FULL.

Project Name and Address:
Urb. El Rosario
Facility Repair
Calle 3
Vega Baja, Puerto Rico

Client Name and Address:
DEPARTAMENTO DE RECREACION Y DEPORTES DE PR
PO Box 9023207 San Juan
PR 00902-3207
Tel. (787) 721 2800 Fax: (787) 268-1845
www.drd.pr.gov

Design by: B. QUINONES

No.	Revision/Issue	Plot Date:



DRD
DEPARTAMENTO DE RECREACIÓN Y DEPORTES

PO Box 9023207
San Juan PR
00902-3207

In this Page:

CHAIN LINK GATE DETAILS

Scale:	Details scale:
NOT TO SCALE	AS NOTED

Job #: 2023-000502
Date: MAY 30, 2023
Check by: AUG 19, 2024

Sheet No.
A-04

DRD-CONDICIONES ESPECIALES SUPLEMENTARIAS

I. DISPOSICIONES RELACIONADAS AL DESARROLLO DEL PROYECTO (según aplique):

a. El Contratista deberá familiarizarse con las condiciones existentes y con todas las particularidades que presenta la estructura a la cual se intervendrá

b. El Contratista será responsable de verificar la ubicación exacta y la condición de todos los componentes del proyecto, así como de los componentes del sistema eléctrico y del sistema de distribución de agua potable que existen en las áreas directamente afectadas por los trabajos correspondientes a este contrato.

c. De surgir alguna discrepancia entre los equipos, accesorios o dispositivos existentes a permanecer y los propuestos, el Contratista será responsable de discutir y aclarar la misma con el inspector y/o representante del dueño, antes de tomar cualquier decisión. El Contratista NO realizará trabajo alguno que considere adicional al contrato sin la autorización previa, por escrito, del inspector o representante designado de la DRD para este proyecto. Estos no serán remunerados

d. Las medidas o especificaciones establecidas como *estándar* en reglamentos y códigos, según el uso y aplicación, deberán predominar siempre sobre lo instalado en sitio o lo indicado en los Documentos de Contrato, a menos que se especifique lo contrario en los mismos. De especificarse lo contrario, el Contratista deberá confirmar dicha información con el inspector y/o representante designado de la DRD.

e. De surgir alguna discrepancia en relación con algún tipo de material, equipo o trabajo especificado, el Contratista deberá considerar que siempre prevalecerán los requisitos más restrictivos, incluyendo mayor cantidad, mayor calidad, mayor nivel de seguridad y el material, equipo o trabajo más exigente, según indicado en los Documentos de Contrato.

f. Todo cambio que surja durante la ejecución de los trabajos incluidos en contrato, ya sea por recomendación del Contratista o mediante una solicitud formal del DRD (a través de su representante designado y/o a través del inspector del proyecto), deberá informarse por escrito mediante carta firmada por el Contratista, con la recomendación y la aprobación de la DRD. De haber algún costo adicional o crédito por dichos trabajos, el mismo deberá mencionarse en dicha carta.

g. Cualquier duda o desacuerdo que tenga el Contratista deberá ser informado al DRD mediante correspondencia escrita, con copia a su representante designado y al inspector del proyecto.

h. El Contratista será responsable de realizar las reparaciones a las superficies y/o instalaciones físicas existentes que hayan sufrido daño por causa de los trabajos o actividades relacionadas al desarrollo de la obra, según sea requerido por el representante designado del DRD. Cualquier ruptura de tuberías, infraestructura mecánica o utilidades eléctricas, causada por los trabajos incluidos en este contrato, deberá ser reparada inmediatamente, de forma tal que los servicios afectados por dicha condición sean restablecidos a la mayor brevedad.

i. El Contratista deberá tomar todas las medidas necesarias para evitar:

j. La propagación de polvo fugitivo procedente de actividades de remoción o demolición selectiva y de acarreo de materiales o escombros, en estricto cumplimiento con las disposiciones establecidas en el Reglamento para el Control de Contaminación Atmosférica de la Junta de Calidad Ambiental (JCA) y la reglamentación federal aplicable.

k. La utilización de materiales y equipo que emitan gases y/o residuos tóxicos al ambiente, en estricto cumplimiento con las disposiciones establecidas en el Reglamento para el Control de Contaminación Atmosférica de la Junta de Calidad Ambiental (JCA) y la reglamentación federal aplicable.

l. La propagación de ruidos procedentes de las áreas impactadas por los trabajos incluidos en contrato que excedan los niveles máximos de ruido permitidos por ley, de acuerdo con las disposiciones establecidas en el Reglamento para el Control de Contaminación por Ruidos de la Junta de Calidad Ambiental (JCA) y la reglamentación federal aplicable.

m. La realización de cualquier actividad que pueda afectar adversamente la salud de los residentes de las comunidades aledañas al mismo, en cumplimiento con todas las leyes y reglamentos ambientales, estatales y federales, que sean aplicables. Es de notar que cualquier multa de OSHA notificada al DRD o al Representante Autorizado, como consecuencia, motivada, o relacionada con la conducta del Contratista por trabajos relacionados a este proyecto, será de la entera responsabilidad del mismo.

n. El Contratista deberá proveer el recipiente, camión o medio de almacenamiento y transporte adecuado para disponer, de forma inmediata (en un periodo de 24 horas del lugar designado en el sitio del proyecto para acumular o almacenar los mismos), de toda la basura o escombros que se generen como consecuencia de los trabajos incluidos en contrato. NO se permitirá la utilización de los recipientes de basura existentes en las instalaciones. Toda basura deberá disponerse con su contenido, de forma tal que, de ser tóxica o contaminante, se cumpla con todas las leyes y reglamentos ambientales (estatales y federales) aplicables a estas actividades. Recae como responsabilidad del Contratista el identificar el contenido del material y disponer del mismo adecuadamente, presentando como evidencia el manifiesto de disposición en original.

ñ. La disposición adecuada de todas las unidades, accesorios y equipos mecánicos/eléctricos a ser removidos como parte de este contrato, deberá realizarse siguiendo las indicaciones del inspector o representante designado del DRD para el proyecto de referencia y en cumplimiento con lo dispuesto en las especificaciones técnicas relacionadas y en todas las leyes y reglamentos ambientales (estatales y federales) aplicables para estas actividades, para lo cual se deberá presentar el correspondiente comprobante de disposición de desperdicios (en original) durante el proceso de desarrollo de estos trabajos.

a. El Contratista deberá implantar todas las medidas de seguridad que estime necesarias para delimitar y rotular las áreas impactadas por los trabajos relacionados a este proyecto, así como las áreas dispuestas para almacenaje de materiales y equipos, de forma tal que se pueda restringir el acceso a las mismas de maestros, estudiantes, empleados u otras personas ajenas a los trabajos incluidos en contrato, durante el desarrollo de la obra.

b. El Contratista deberá coordinar, con el funcionario designado como representante del DRD (inspector o coordinador del proyecto) y con el encargado (a) del lugar, el horario más adecuado para realizar los siguientes trabajos:

1. Acarreo y disposición de escombros generados por las actividades de demolición selectiva o remoción de unidades y equipos.

2. Se recuerda que el Contratista será responsable de mantener todas las áreas de trabajo limpias, durante y después de cada día laborable, y será responsable de llevar a cabo todos los trabajos incluidos en contrato, en estrecha coordinación con el representante designado para este proyecto (inspector o supervisor del proyecto), de forma tal que las obras no interrumpan o interfieran con las labores de los otros locales y las actividades que se llevan a cabo en estas instalaciones. De ser necesario realizar cualquier trabajo incluido en contrato, fuera de horas laborables, en días feriados o en fines de semana, el mismo deberá estar coordinado y autorizado (por escrito) por los funcionarios antes mencionados.

q. El Departamento de Recreación y Deportes (DRD) NO le requerirá al Contratista la instalación de una oficina de inspección (*Inspection Office*) para el proyecto de referencia.

II. DISPOSICIONES TÉCNICAS:

a. El Contratista proveerá e instalará toda la conexión razonable a los equipos eléctricos y mecánicos que se incluyan como parte de este contrato, aunque dicha conexión no esté ilustrada en planos. De haber una omisión o discrepancia en las especificaciones o planos, el Contratista será responsable de proveer e instalar el sistema mínimo requerido para que el equipo quede en servicio y la facilidad pueda operar funcionalmente, sin costo adicional al DRD y sin que se afecte la garantía de los equipos antes mencionados. La solución que provea el Contratista cumplirá con todos los códigos y reglamentos aplicables y será aprobada por el DRD.

Ejemplo de Rótulo de Proyecto

Rótulo tamaño 192"x96"





Ejemplo área blanca (reservada) para logos. De tenerlos colocarlos de abajo para arriba.



IMPORTANT NOTICE:
ALL DESIGNS, DRAWINGS AND COPIES ISSUED BY B. QUINONES, ARE PROPERTY OF B. QUINONES, AND CANNOT BE REPRODUCED OR EXHIBITED IN ANY MANNER OR PLACE EXCEPT FOR THE PURPOSE OF ITS DESIGN INTENT OR BY WRITTEN CONSENT OF B. QUINONES. IF FOR ANY REASON, PART OR ALL OF THE B. QUINONES DESIGN IS ISSUED OR BUILT WITHOUT B.QUINONES CONSENT, THE PARTIES INVOLVED SHALL PAY B. QUINONES FEE IN FULL.

Project Name and Address:
Urb. El Rosario
Facility Repair
Calle 3
Vega Baja, Puerto Rico

Client Name and Address:
DEPARTAMENTO DE RECREACION Y DEPORTES DE PR
PO Box 9023207 San Juan
PR 00902-3207
Tel. (787) 721-2800 Fax: (787) 268-1545
www.ddeif.pr.gov

Design by: B. QUINONES

No.	Revision/Issue	Plot Date:

Brendaly Quiñones Villodas
Ingeniero
Licenciado
Lic. 17715 PE
Puerto Rico
Fecha de Expiración 2024.06.10
HARD COPY
SIGNATURE AND SEAL
ENG. BRENDALY QUINONES Lic. # 17715

DRD
DEPARTAMENTO DE RECREACIÓN Y DEPORTES
PO Box 9023207
San Juan PR
00902-3207

In this Page:
PROPOSED SIGN AND NOTES

Scale: NOT TO SCALE
Details scale: AS NOTED

Job #: 2023-000502
Date: MAY 30, 2023
Check by: AUG 19, 2024
Sheet No.
A-05

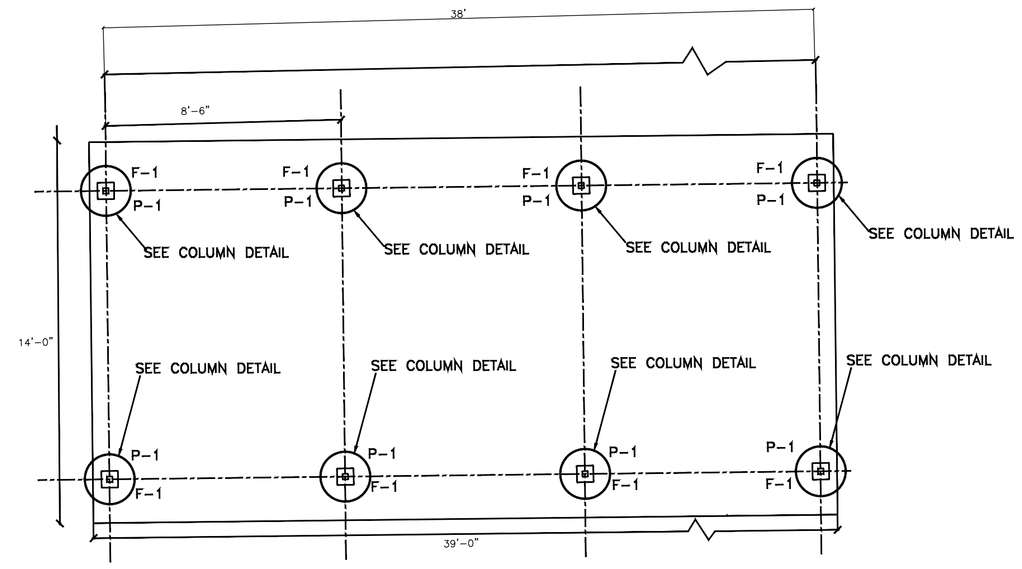

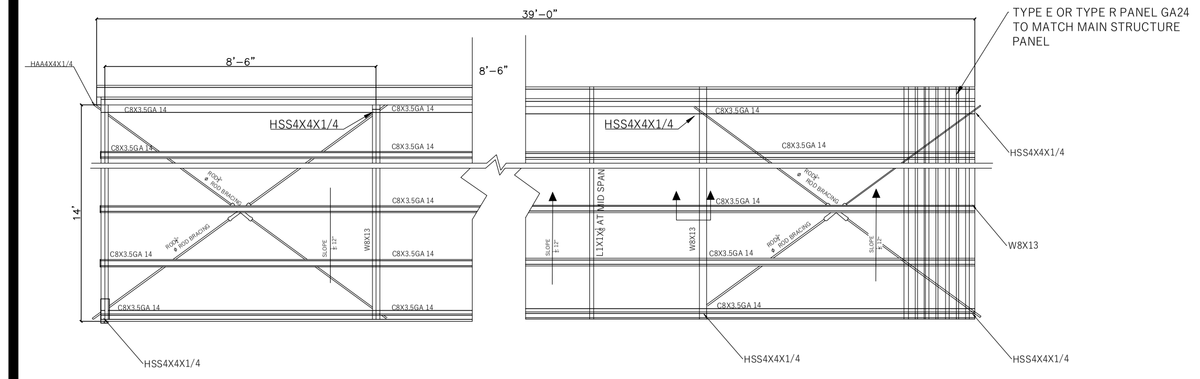

MAIN BASKETBALL COURT

ROOF STRUCTURE DETAIL

SCALE: NOT TO SCALE

NOTE:

1. USE BLACK STEEL A-36. FOR BEAMS USE BLACK STEEL A-992 FY 50 KSI. FOR TUBING, USE BLACK STEEL A-500 GR. B.
2. APPLY ONE COAT OF RED OXIDE PRIMER TO ALL BLACK STEEL.

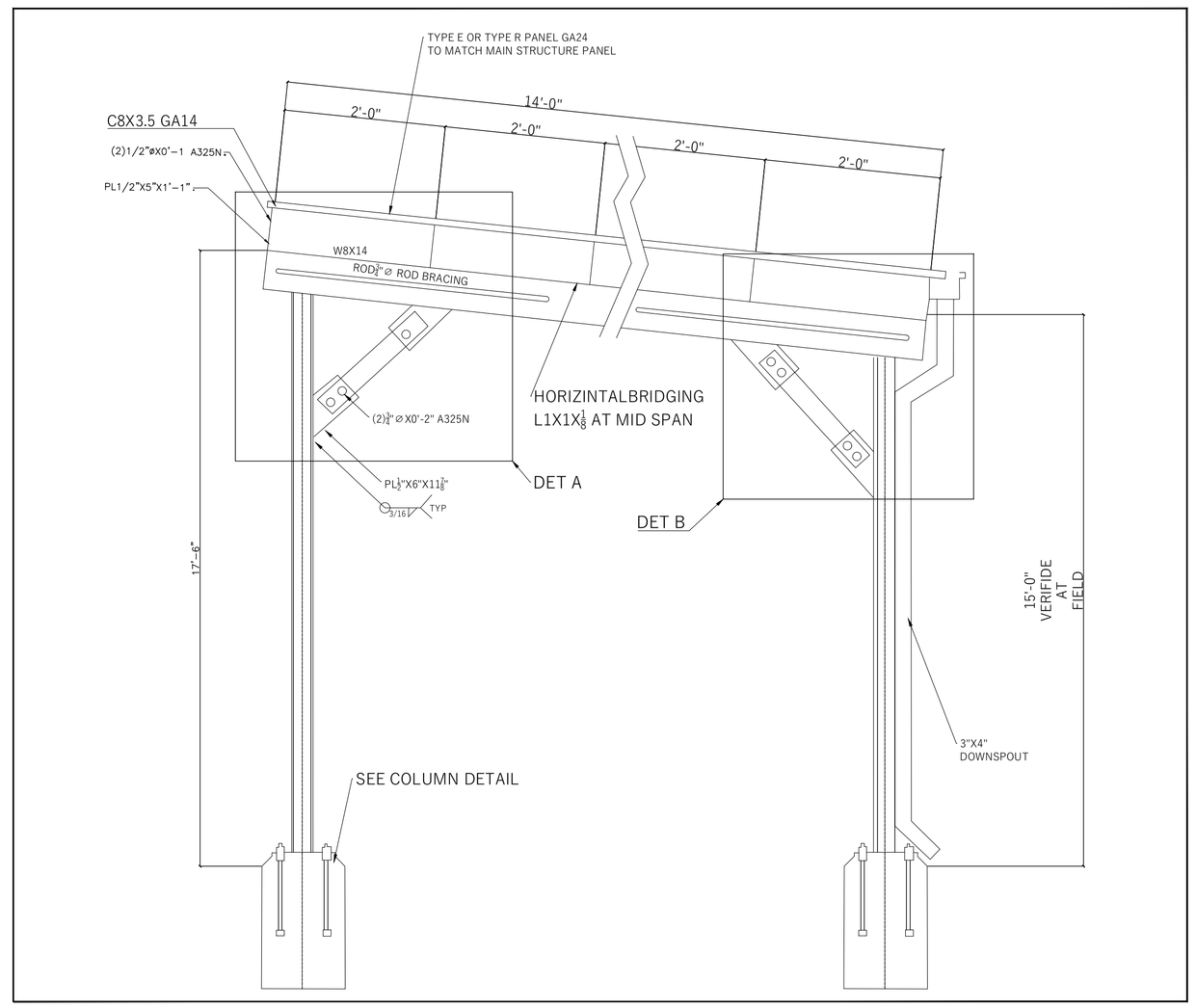

SECTION A-A

SCALE: NOT TO SCALE

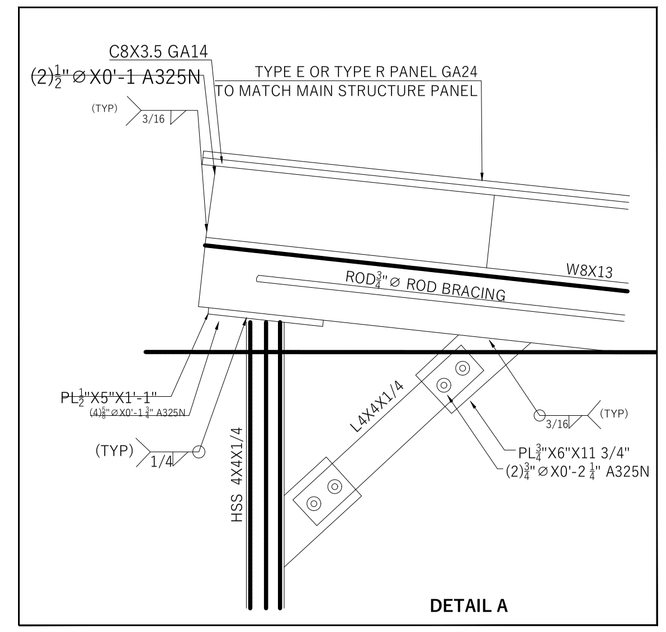

DETAIL A

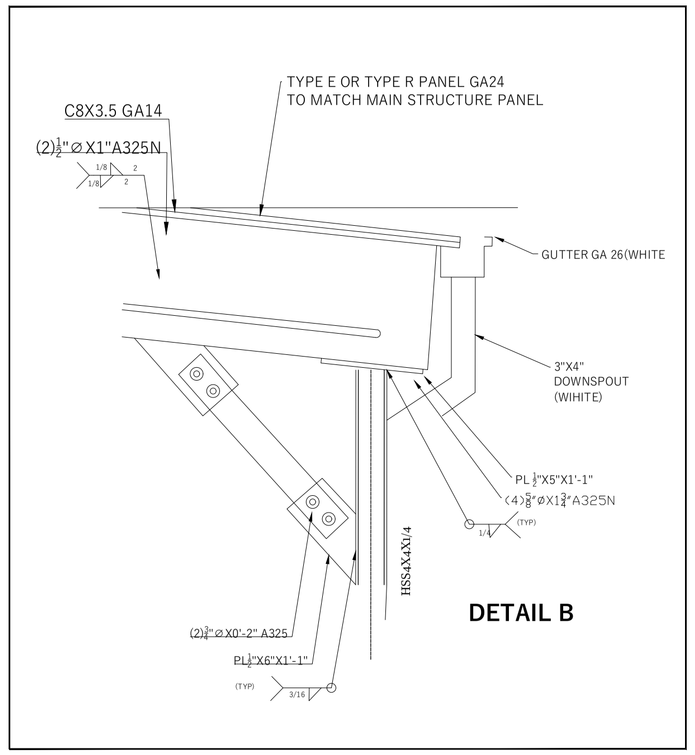

DETAIL B

DETAILS A AND B

SCALE: NOT TO SCALE

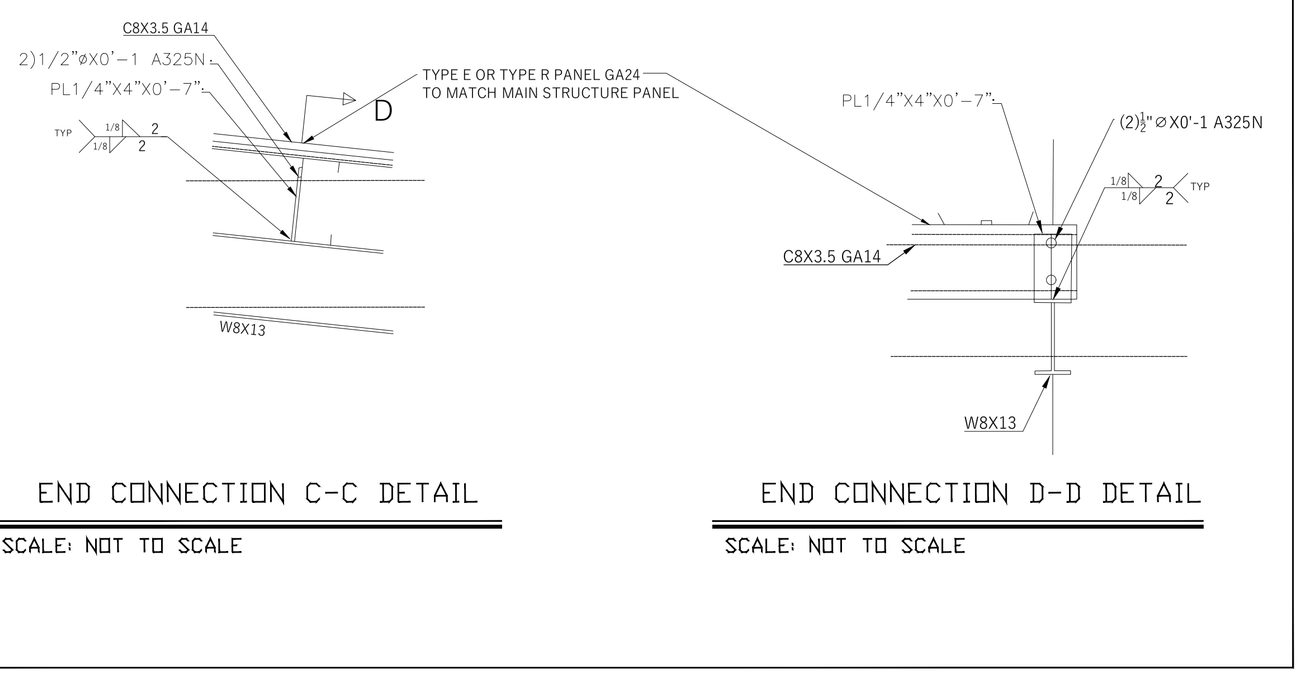

END CONNECTION C-C DETAIL

SCALE: NOT TO SCALE

END CONNECTION D-D DETAIL

SCALE: NOT TO SCALE

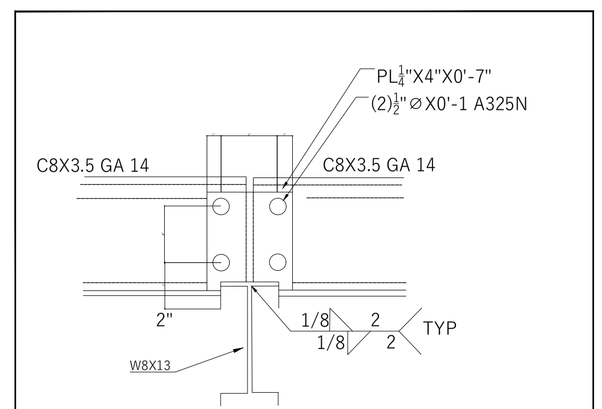

TYP. PURLING CONNECTION

SCALE: NOT TO SCALE

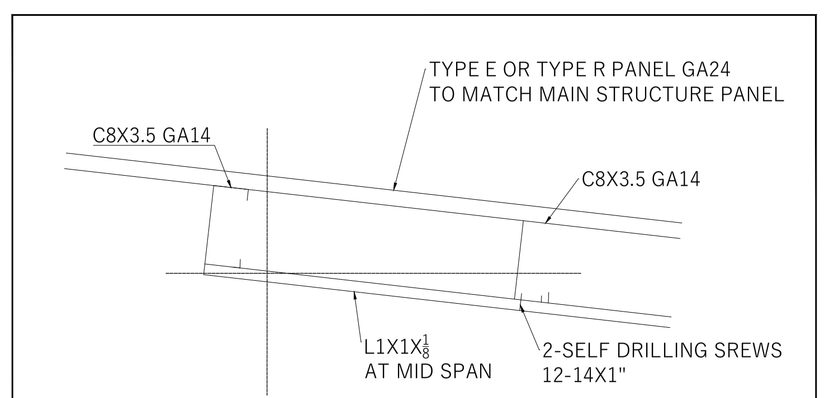

MID SPAN DETAIL

SCALE: NOT TO SCALE

IMPORTANT NOTICE:

ALL DESIGNS, DRAWINGS AND COPIES ISSUED BY B. QUINONES, ARE PROPERTY OF B. QUINONES, AND CANNOT BE REPRODUCED OR EXHIBITED IN ANY MANNER OR PLACE EXCEPT FOR THE PURPOSE OF ITS DESIGN INTENT OR BY WRITTEN CONSENT OF B. QUINONES. IF FOR ANY REASON, PART OR ALL OF THE B. QUINONES DESIGN IS ISSUED OR BUILT WITHOUT B.QUINONES CONSENT, THE PARTIES INVOLVED SHALL PAY B. QUINONES FEE IN FULL.

Project Name and Address:
Urb. El Rosario
Facility Damage Repair
Calle 3
Vega Baja, Puerto Rico

Client Name and Address:
DEPARTAMENTO DE RECREACION Y DEPORTES DE PR
PO Box 9023207
PR 00902-3207
Tel. (787) 721 2800 Fax: (787) 268-1545
www.drd.pr.gov

Design by: B. QUINONES

No.	Revision/Issue	Plot Date:

Brendaly Quiñones Villodas
Ingeniero
Licenciado
Lic. 17715 PE
Puerto Rico
Fecha de Expiración: 2024-06-30
HARD COPY
SIGNATURE AND SEAL
ENG. BRENDALY QUIÑONES Lic. # 17715

DRD
DEPARTAMENTO DE RECREACIÓN Y DEPORTES
PO Box 9023207
San Juan PR
00902-3207

In this Page:

BLEACHER'S CANOPY DETAILS

Scale:	Details scale:
NOT TO SCALE	AS NOTED

Job #: 2023-000501	Sheet No.
Date: MAR 12, 2024	S-01
Check by:AUG 19, 2024	

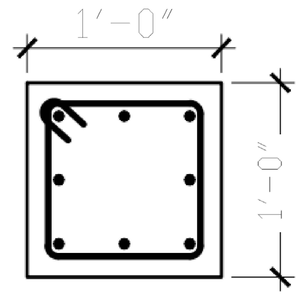

Reinf. 8#4
Ties #3@4"

COLUMN DETAIL (P-1)

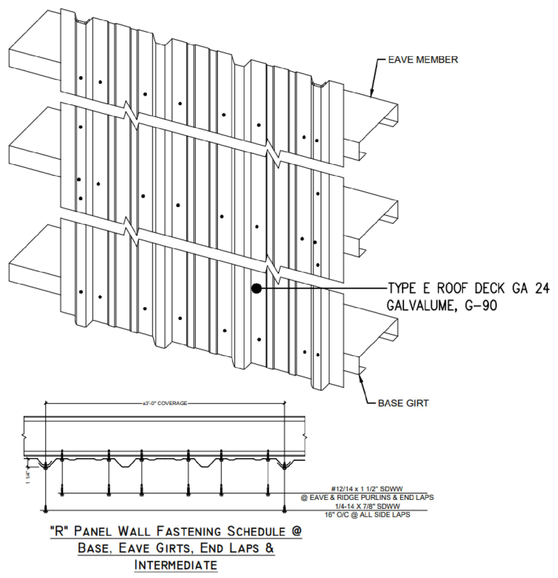

"R" PANEL WALL FASTENING SCHEDULE @ BASE, EAVE GIRTS, END LAPS & INTERMEDIATE

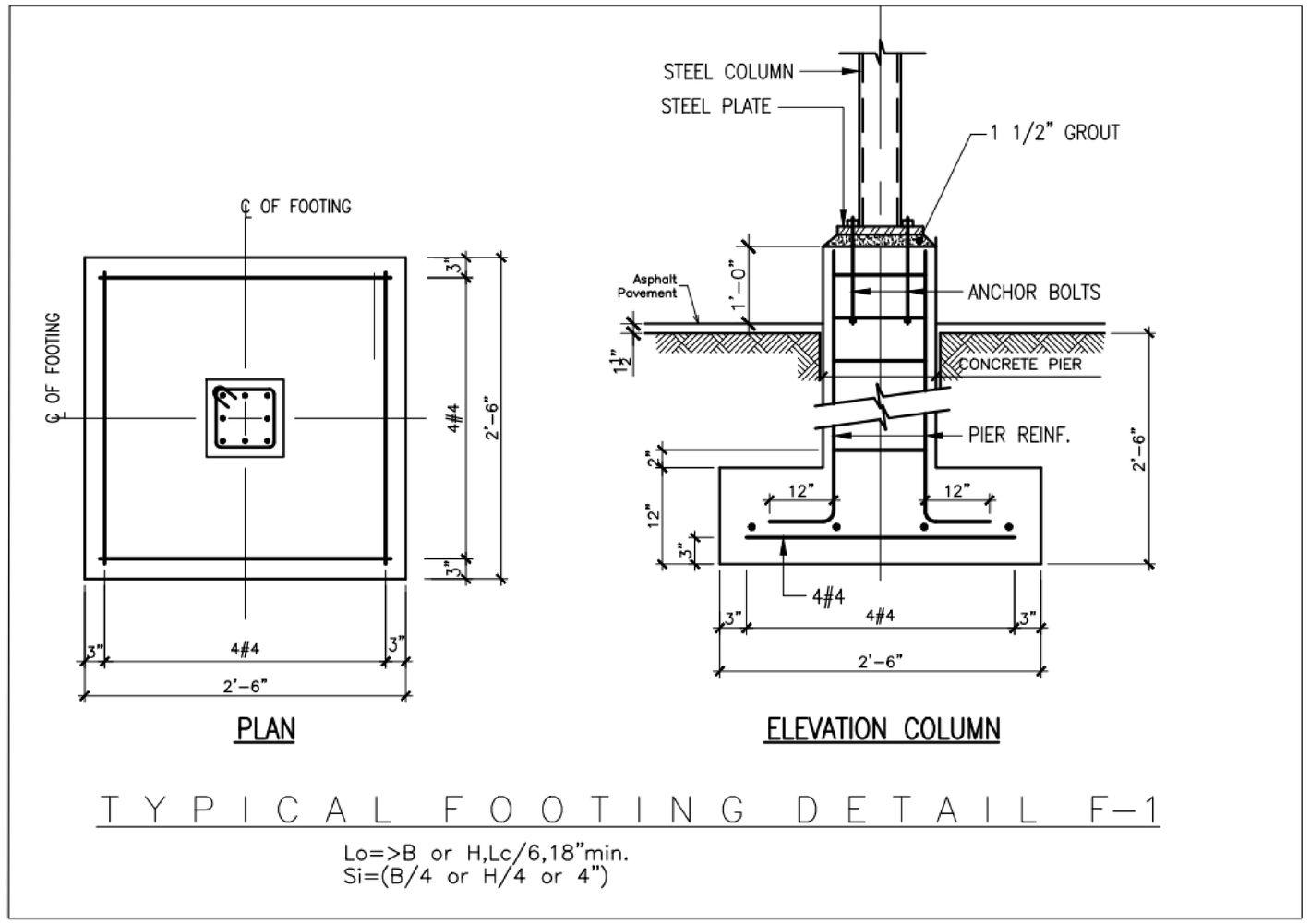

TYPICAL FOOTING DETAIL F-1

Lo=>B or H,Lc/6,18"min.
Si=(B/4 or H/4 or 4")

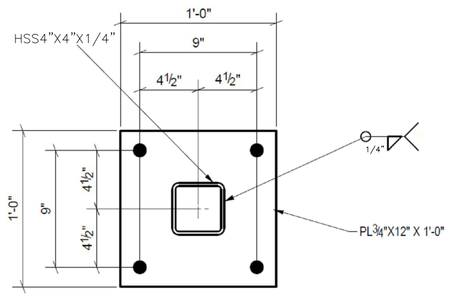

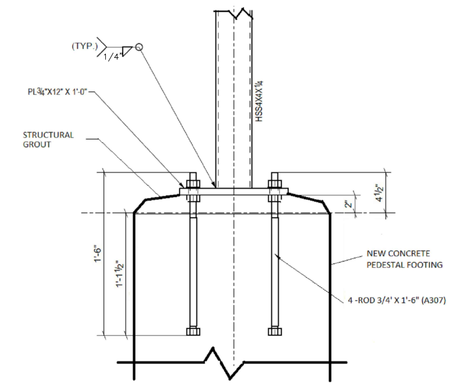

PEDESTAL DETAIL
NOT TO SCALE

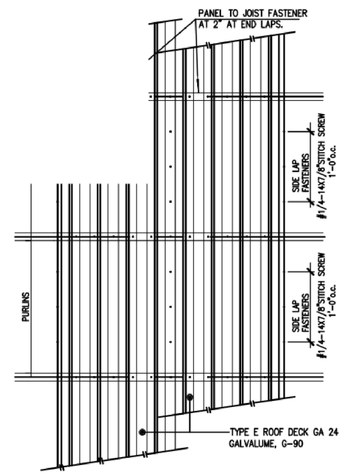

INSTALLATION DETAIL OF STEEL ROOF DECK
(NOT TO SCALE)

INSTALLATION INSTRUCTIONS

1- STEEL DECK PLATES SHALL SPAN AT LEAST 3 JOIST.
2- DECK SHEETS SHOULD BE PLACED IN ACCORDANCE WITH APPROVED ERECTION LAYOUT DRAWINGS SUPPLIED BY THE DECK MANUFACTURE'S STANDARS AND SHALL BE ERECTED BEGINING AT THE LOW SIDE TO INSURE THAT END LAPS ARE SHINGLE FASHION.
3- END LAPS SHALL BE 2" MINIMUM AND SHOULD OCCURS OVER SUPPORT.
4- ALL LAPS SHALL BE CENTER DIRECTLY OVER PURLINS
5- ALL FASTENERS SHALL BE IN ACCORDANCE WITH MANUFACTURE'S SPECIFICATION AND ERECTION LAYOUTS.
6- SUPPORT FASTENERS #12-14X1 1/4 SELF DRILLER
7- METAL DECK SHALL BE FACTORY MUTUAL APPROVED.

NOTES :
DECK SHALL BE FASTENED TO JOIST SO AS TO RESIST AN UPLIFT PRESSURE OF 80PSF.

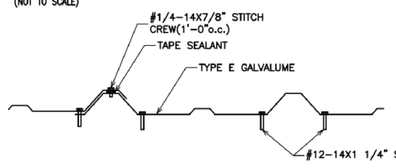

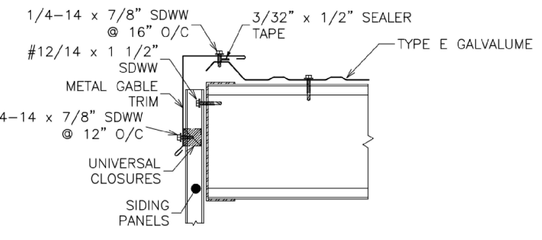

METAL ROOF END CLOSURE TRIM DETAIL

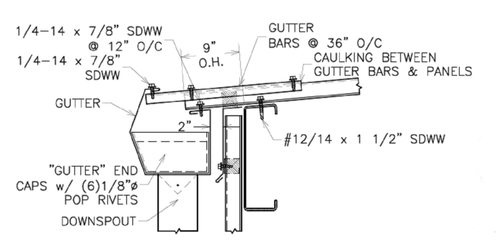

METAL GUTTER & DOWNSPOUT DETAIL

NOTES:
1. GUTTER TO BE CAULKED & LAPPED 4" MIN. AND POP RIVETED TOGETHER USING (8) 1/8"ø POP RIVETS.
2. FIELD LOCATE AND MARK DOWNSPOUT LOCATION IN BOTTOM OF GUTTER. DRAW LINE FROM CORNER TO CORNER AND CUT ALONG LINE. BEND TABS DOWN AND POP RIVET INSIDE DOWNSPOUT.
3. USE THE CHART TO THE LEFT FOR DIMENSION VALUES FOR YOUR PARTICULAR ROOF PITCH.
4. GUTTER SIZE AND GUTTER BAR SPACING MUST BE ADJUSTED TO SUIT LOCAL WEATHER PECULIARITIES AND/OR TO ACCOMMODATE LONG ROOF SLOPES.

FOUNDATION, EXCAVATION AND CONSTRUCTION NOTES

1. FOUNDATION DESIGN BASED ON SOIL REPORT BY: NOT AVAILABLE. THE FOUNDATION DESIGN IS BASED ON THE ASSUMPTION OF A SOIL CAPACITY OF 2,000.00 PSF.
2. CONTRACTOR SHALL PROVIDE FOR DE-WATERING OF EXCAVATIONS FROM EITHER SURFACE WATER, GROUND WATER OR SEEPAGE.
3. CONTRACTOR SHALL PROVIDE FOR DESIGN AND INSTALLATION OF ALL CRIBBING, SHEATHING AND SHORING REQUIRED TO SAFELY RETAINING THE EARTH BANKS.
4. EXCAVATION FOR FOOTING SHALL BE APPROVED BY THE ENGINEER OF RECORD PRIOR TO PLACING THE CONCRETE AND REINFORCING. CONTRACTOR SHALL NOTIFY THE ENGINEER OF RECORD WHEN INSPECTION OF EXCAVATION IS READY.
5. ALL EXCAVATIONS SHALL BE PROPERLY BACK FILLED. DO NOT PLACE BACK FILL BEHIND RETAINING WALLS BEFORE CONCRETE HAS ATTAINED FULL DESIGN STRENGTH. CONTRACTOR SHALL BRACE AND PROTECT ALL BUILDING'S PIT WALLS BELOW GRADE FROM LATERAL LOADS UNTIL ATTACHED FLOORS ARE COMPLETELY IN PLACE AND HAVE ATTAINED FULL STRENGTH. CONTRACTOR SHALL PROVIDE FOR DESIGN, PERMITS AND INSTALLATION OF SUCH BRACING.
6. FOOTINGS SHALL BE PLACED AND ESTIMATED ACCORDING TO DEPTH SHOWN NOT TO BE SUITABLE FOR BEARING, DEPTH SHALL BE INCREASED PER SOILS REPORT RECOMMENDATION, SEE NOTE NO. 1
7. FOOTINGS BACK FILL AND UTILITY TRENCH BACK FILL WITHIN BUILDING SHALL BE MECHANICALLY COMPACTED IN LAYERS NOT OVER 8" IN THICKNESS WITH THE APPROVAL OF THE DESIGN ENGINEER, FLOODING WILL NOT BE PERMITTED.
8. ALL ABANDONED FOOTINGS, UTILITIES, ETC. THAT INTERFERE WITH NEW CONSTRUCTION SHALL BE REMOVED. NEW FOOTINGS MUST EXTEND INTO UNDISTURBED SOILS OR AS SHOWN ON DRAWINGS.
9. ALL FOUNDATION MUST BE PLACED ON GOOD AND/OR UNDISTURBED SOIL UNLESS NOTED OTHERWISE. UNSATISFACTORY SOIL MUST BE REMOVED AND REPLACED WITH SELECTED FILL MATERIAL AS PER SOIL REPORT RECOMMENDATIONS, SEE NOTE NO. 1.
10. A PROFESSIONAL GOETECHNICAL ENGINEER LICENSED IN PUERTO RICO SHALL OBSERVE COMPLIANCE WITH SOIL REPORT. THE GEOTECHNICAL ENGINEER SHALL DETERMINE WETHER THE SOIL IN WHICH THE FOUNDATIONS SHALL BE POURED IS AN ADEQUATE SOIL IN THE EVENT THAT SUBSURFACE CONDITIONS DIFFER FROM THOSE ANTICIPATED PRIOR TO START OF CONSTRUCTION. IF SOIL IS NOT ADEQUATE, THE CONTRACTOR SHALL CONTINUE TO EXCAVATE UNTIL THE ADEQUATE ALLUVIUM SOIL HAS BEEN REACHED.
11. THE CONTRACTOR SHALL VERIFY ALL DIMENSIONS AND EXISTING CONDITIONS PRIOR TO ACTUAL CONSTRUCTION. ANY CONFLICT WITH DETAILS OR NOTES SHALL BE BROUGHT TO THE ATTENTION OF THE DESIGN ENGINEER FOR CLARIFICATION.
12. ALL CONSTRUCTION, EXCAVATION AND/OR DEMOLITION SHALL BE MADE IN SUCH A WAY AS NOT TO IMPAIR THE STRENGTH, STABILITY OR USE OF ANY EXISTING STRUCTURE TO REMAIN.
13. FILL MATERIAL SHALL BE SELECTED FILL MATERIAL AND COMPACTED TO A MINIMUM OF 95% MODIFIED PROCTOR TEST, IN LIFTS OF 8" OR LESS, SEE NOTE NO. 1.
14. FINAL FOOTING, PEDESTAL AND ANCHOR BOLT LOCATION SHALL BE COORDINATE WITH THE PRE-ENGINEERING'S ANCHOR BOLT LAYOUT PROVIDED BY THE STEEL BUILDING MANUFACTURER.
15. WATER MARK OF ARCHITECTURAL PLAN IS FOR REFERENCE ONLY. FOR ARCHITECTURAL LAYOUT AND DIMENSION REFER TO THE ARCHITECTURAL DRAWING SHEETS.
16. CONCRETE COMPRESSIVE STRENGTH EQUALS 3,000 PSI
17. STEEL YIELD STRENGTH EQUALS 60,000.00 PSI

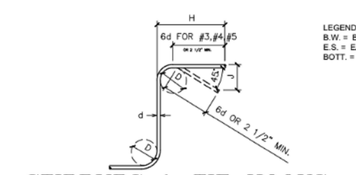

STIRRUPS & TIE HOOKS
N.T.S.

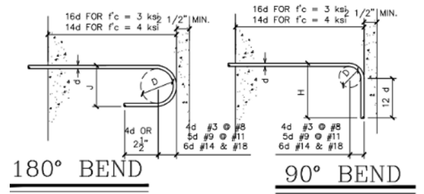

180° BEND

STANDARD HOOKS
N.T.S.

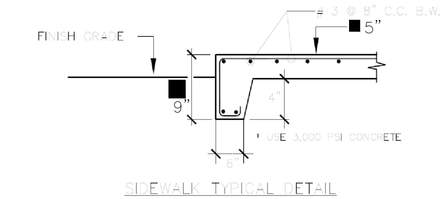

SIDEWALK TYPICAL DETAIL

STRUCTURAL STEEL NOTES:

1) STRUCTURAL STEEL FABRICATION, ERECTION AND CONNECTION DESIGN SHALL CONFORM TO AISC "SPECIFICATION FOR THE DESIGN, FABRICATION AND ERECTION OF STRUCTURAL STEEL". THIRTEENTH EDITION.
2) STRUCTURAL STEEL WIDE FLANGE SHAPES SHALL CONFORM ASTM A572, GRADE 50 OR ASTM A992 STEEL WITH A YIELD STRENTH OF 50 KSI, STEEL FOR PLATES, ANGLES, AND CHANNELS SHALL CONFORM TO ASTM A36 WITH A YIELD STRENGTH OF 36 KSI. HOLLOW STRUCTURAL SECTIONS SHALL CONFORM TO ASTM A500 GRADE B WITH A MINIMUM YIELD STRENGTH OF 46 KSI
3) FIELD CONNECTIONS SHALL BE BOLTED USING 3/4" DIAMETER A325N HIGH STRENGTH BOLTS EXCEPT WERE FIELD WELDING IS INDICATED ON THE DRAWING OR WHERE OTHERWISE REQUIRED TO SUPPORT A DESIGN LOADS.
4) ALL WELDING SHALL CONFORM TO AWS D1.1-LATEST EDITION. ELECTRODES SHALL BE E70XX.

DESIGN NOTES :

1) THIS BUILDING IS DESIGNED TO COMPLY WITH THE INTERNATIONAL BUILDING CODE 2009 (IBC) AND ASCE7-16
2) LIVE LOADS:
ROOF = 20 PSF
3) WIND LOAD:
ASCE 7-16 CODE
A. BASIC WIND SPEED = 164 MPH
B. WIND EXPOSURE = EXPOSURE C
4) EARTHQUAKE LOAD: IN ACCORDANCE WITH ASCE 7-16

GENERAL NOTES :

1) THE NOTES ON THESE DRAWINGS ARE NOT INTENDED TO REPLACE THE SPECIFICATIONS, SEE SPECIFICATIONS FOR REQUIREMENTS IN ADDITION TO THE GENERAL NOTES. INCONSISTENCIES BETWEEN THE DRAWINGS AND THE SPECIFICATIONS SHALL BE BROUGHT TO THE ATTENTION OF THE ENGINEER PRIOR TO PROCEEDING WITH THE AFFECTED PORTION OF THE WORKS.
2) STRUCTURAL DRAWINGS SHALL BE USED IN CONJUCTION WITH ARCHITECTURAL, MECHANICAL, ELECTRICAL AND SITE DRAWINGS. G.C. SHALL COORDINATE LOCATION AND DIMENSIONS OF OPENINGS, CHASES, INSERTS, REGLETS, SLEEVES, DEPRESSIONS, ETC.
3) ALL DIMENSIONS AND COORDINATES SHALL BE VERIFIED. ANY DISCREPANCIES SHALL BE BROUGHT TO THE ATTENTION OF THE ENGINEER BEFORE PROCEEDING WITH AFFECTED PORTION OF THE WORK.
4) THE STRUCTURE IS DESIGNED TO BE SELF SUPPORTING AND STABLE AFTER THE BUILDING IS COMPLETED. IT IS THE CONTRACTOR SOLE RESPONSIBILITY TO DETERMINE ERECTION PROCEDURE AND SEQUENCE TO ENSURE THE SAFETY OF THE BUILDING AND ITS COMPONENTS DURING ERECTION. THIS INCLUDES THE ADDITION OF NECESSARY SHORING, SHEETING, TEMPORARY BRACING, GUYS, OR TIEDOWNS. SUCH MATERIAL SHALL REMAIN THE PROPERTY OF THE CONTRACTOR AFTER COMPLETION OF THE PROJECT.
5) SECTIONS AND DETAILS SHOWN ON ANY STRUCTURAL DRAWING SHALL BE CONSIDERED TYPICAL FOR SIMILAR CONDITIONS.
6) THE CONTRACTOR SHALL PERFORM ALL WORKS IN CONFORMANCE WITH ALL APPLICABLE FEDERAL, STATE AND MUNICIPAL REGULATIONS.
7) ALL OPEN FOUNDATION EXCAVATIONS MUST BE INSPECTED AND APPROVED BY A LICENSED GEOTECHNICAL ENGINEER PRIOR TO PLACEMENT OF CONCRETE

FOUNDATION NOTES:

1) FOOTING ARE DESIGNED FOR AN ALLOWABLE SOIL BEARING PRESSURE OF 500 psf WITH A BOTTOM FOOTING ELEVATION AT MINIMUM DEPHT OF 2'-6" BELOW THE FINAL GRADE.
2) TEMPORARY EXCAVATION FOR THE INSTALLATION OF FOOTINGS, PIPES OR OTHER PURPOSES SHALL BE SLOPED OR BRACED IN ACCORDANCE WITH "OSHA" REQUIREMENT AND ANY ADDITIONAL RECOMENDATION OF THE STRUCTURAL OR GEOTECHNICAL ENGINEERS.
3) THE TOP SOIL SUPPORTING ANY EXISTING VEGETATION OF SHRUBS AND GRASSES SHALL BE REMOVED PRIOR TO START ANY FILLING OPERATION.

ON KEY LLC

IMPORTANT NOTICE:
ALL DESIGNS, DRAWINGS AND COPIES ISSUED BY B. QUINONES, ARE PROPERTY OF B. QUINONES, AND CANNOT BE REPRODUCED OR EXHIBITED IN ANY MANNER OR PLACE EXCEPT FOR THE PURPOSE OF ITS DESIGN INTENT OR BY WRITTEN CONSENT OF B. QUINONES. IF FOR ANY REASON, PART OR ALL OF THE B. QUINONES DESIGN IS ISSUED OR BUILT WITHOUT B.QUINONES CONSENT, THE PARTIES INVOLVED SHALL PAY B. QUINONES FEE IN FULL.

Project Name and Address:
Urb. El Rosario
Facility Damage Repair
Calle 3
Vega Baja, Puerto Rico

Client Name and Address:
DEPARTAMENTO DE RECREACION Y DEPORTES DE PR
PO Box 9023207 San Juan
PR 00902-3207
Tel. (787) 721-2800 Fax: (787) 268-1545
www.ddf.pr.gov

Design by: B. QUINONES

No.	Revision/Issue	Plot Date:

Brendaly Quiñones Vilodas
Ingeniero Licenciado
Lic. 17715 PE
Puerto Rico
Fecha de Expiración: 2024.05.10
HARD COPY
SIGNATURE AND SEAL
ENG. BRENDALY QUINONES Lic. # 17715

DRD
DEPARTAMENTO DE RECREACIÓN Y DEPORTES
PO Box 9023207
San Juan PR
00902-3207

In this Page:
BLEACHER'S FOOTING AND DETAILS

Scale: NOT TO SCALE
Details scale: AS NOTED

Job #: 2023-000501
Date: MAY 30, 2023
Check by: AUG 19, 2024
Sheet No.
S-02





ADA BASEBALL FIELD DOUGOUTS
EXISTING CANOPY TO BE REPAIRED

SCALE: NOT TO SCALE



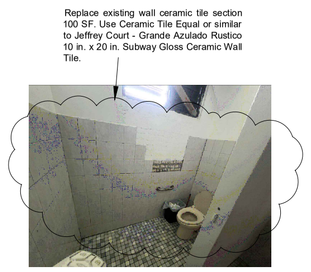

COVERED BASKETBALL COURT RESTROOMS

SCALE: NOT TO SCALE



ADA BASEBALL FIELD RESTROOMS

SCALE: NOT TO SCALE







Demolish, dispose and replace existing concrete sidewalks 4 FT, 5 FT, 6 FT and 10 FT sections. The contractor must consider 1550 SF Approx. Sections will be selected on site. See construction detail.

EXISTING SIDEWALK AND RAMP
TO BE REPAIRED

SCALE: NOT TO SCALE

ADA - BASEBALL FIELD ITEM

1) Remove and dispose of existing damaged 4' high chain link fence sections around the field. Approximately 200 LF

2) Supply and install new 4' high chain link fence sections around the field. Approximately 200 LF.

3)Supply and install a new fence topper all along the perimeter of the all fence. Equal or similar to model 01160 Poly-Cap by Baseball Fence Toppers. Approximately 475 LF.



ADA BASEBALL FIELD BLEACHERS
EXISTING CANOPY TO BE REPAIRED

SCALE: NOT TO SCALE







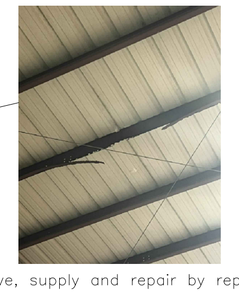

COVERED BASKETBALL COURT

SCALE: NOT TO SCALE

IMPORTANT NOTICE:

ALL DESIGNS, DRAWINGS AND COPIES ISSUED BY B. QUINONES, ARE PROPERTY OF B. QUINONES, AND CANNOT BE REPRODUCED OR EXHIBITED IN ANY MANNER OR PLACE EXCEPT FOR THE PURPOSE OF ITS DESIGN INTENT OR BY WRITTEN CONSENT OF B. QUINONES. IF FOR ANY REASON, PART OR ALL OF THE B. QUINONES DESIGN IS ISSUED OR BUILT WITHOUT B.QUINONES CONSENT, THE PARTIES INVOLVED SHALL PAY B. QUINONES FEE IN FULL.

Project Name and Address:
Urb. El Rosario
Facility Repair
Calle 3
Vega Baja, Puerto Rico

Client Name and Address:
DEPARTAMENTO DE RECREACION Y DEPORTES DE PR
PO Box 9023207 San Juan
PR 00902-3207
Tel. (787) 721 2800 Fax: (787) 268-1545
www.drd.pr.gov

Design by: B. QUINONES

No.	Revision/Issue	Plot Date:

Brendaly Quiñones Villoldo
Ingeniero Licenciado
Lic. 17715 PE
Puerto Rico
Fecha de Expiración: 2024-06-10
HARD COPY SIGNATURE AND SEAL
ENG. BRENDALY QUIÑONES Lic. # 17715

DRD
DEPARTAMENTO DE RECREACIÓN Y DEPORTES
PO Box 9023207
San Juan PR
00902-3207

In this Page:
STRUCTURAL REPAIRS DETAILS

Scale: NOT TO SCALE
Details scale: AS NOTED

Job #: 2023-000502
Date: MAR 11 2024
Check by:AUG 19, 2024
Sheet No.
S - 03

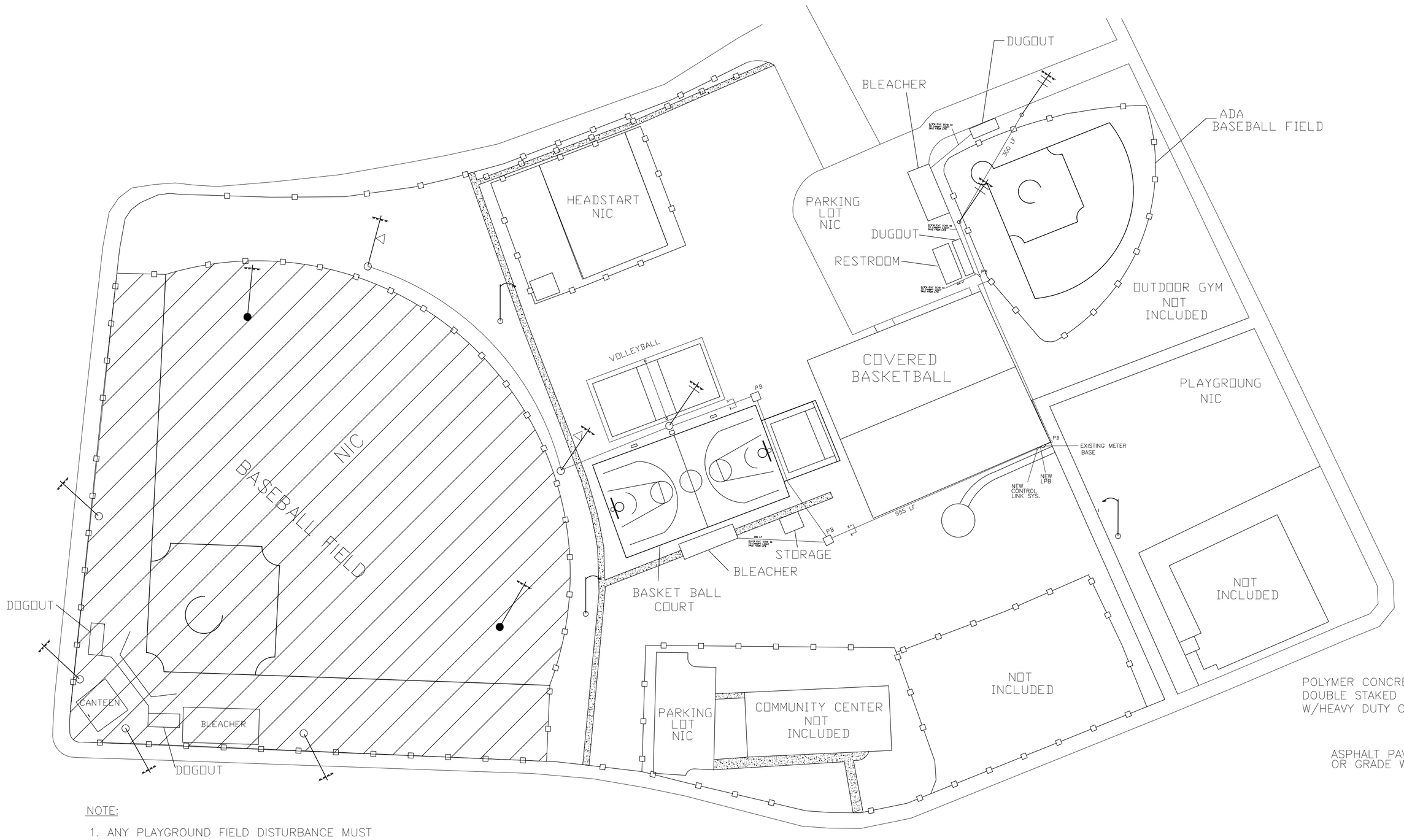

NOTE:

1. ANY PLAYGROUND FIELD DISTURBANCE MUST BE REPAIRED TO PRE EXISTING CONDITIONS OR BETTER.
2. WALKING PATH LIGHTING AND COVERED BASKETBALL COURT EXTERIOR LIGHTING MUST INCLUDE PHOTOCELL SWITCH.

PROPOSED ELECTRICAL SITE PLAN

NOT TO SCALE

LEGEND:

◁ - WALKING PATH LIGHTING - EXISTING POLE.

New exterior luminaires, .Equal or similar to model MUSCO – Outdoor Basketball Court/ Volleyball/Handball/walking path

(1) 50' GALVANIZED STEEL POLE
(1) PRECAST CONCRETE BASE
(2) TLC–LED–550
(3) TLC–LED–900
(1) CABINET Control–Link™

New exterior luminaires, .Equal or similar to model MUSCO – ADA Baseball Field

(2) 60' GALVANIZED STEEL POLE
(2) PRECAST CONCRETE BASE
(4) TLC–LED–1200

EXISTING FIELD METAL POLE TO BE REMOVED. (EIGHT (8 EA) AND INSTALL SIX (6EA)

EXISTING CONCRETE POLE TO BE REMOVED.

X–X New underground electrical wire with 3#4 THWN. (955 LF– Outdoor Basketball Court WIRE, 755 LF CONDUIT) (450 LF– ADA Baseball Field – WIRE AND CONDUIT)

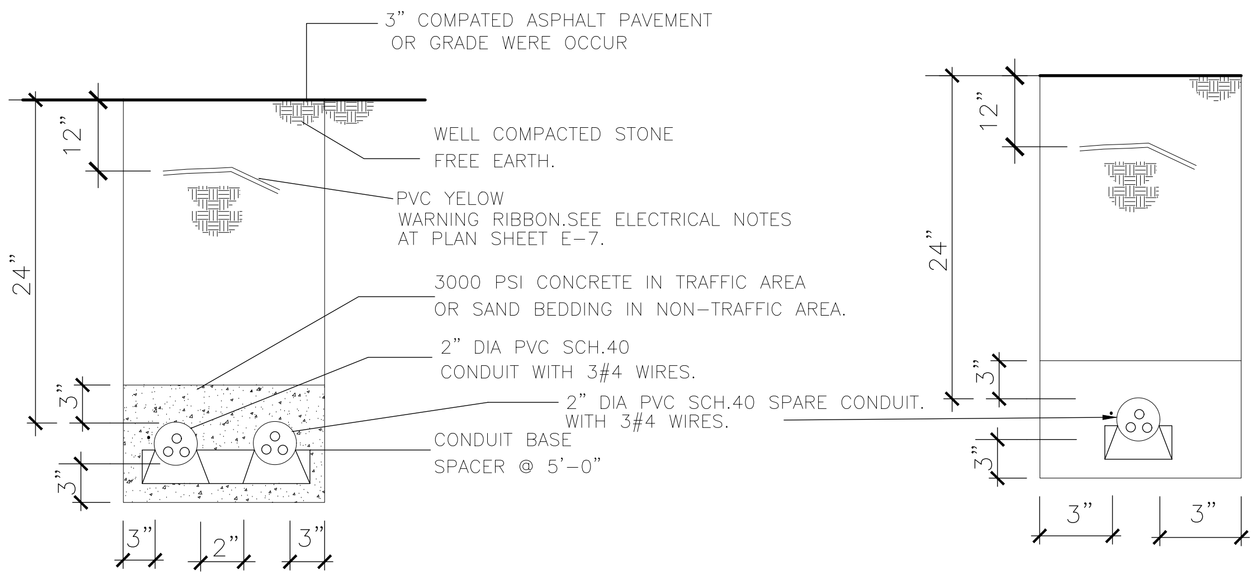

SECTION Y–Y DETAIL

SECTION X–X DETAIL

TRENCH SECTION DETAIL

NOT TO SCALE

EQUAL OR SIMILAR



GE Load Center: 125 A Amps, 120/240V AC, 24 Spaces, 22kA, NEMA 3R Combo Flush/Surface, Main Circuit Breaker
Item 32WT01Mfr. Model TM2412RCU

NEW DISTRIBUTION PANEL LPB

SCALE: NOT TO SCALE

EQUAL OR SIMILAR



SIEMENS Safety Switch: Non–Fusible, 60 A, Single Phase, 600V AC, Galvanized Steel, Indoor/Outdoor. NEMA 3R
Item 20RC89Mfr. Model HNF262R

DISCONNECT SWITCH

SCALE: NOT TO SCALE

POLYMER CONCRETE BOX
DOUBLE STAKED 30"X30"X42" DEEP
W/HEAVY DUTY COVER FOR TRAFFIC

ASPHALT PAVEMENT CONCRETE OR GRADE WHERE OCCUR 12"

NO MECHANICAL FACTORY SPLICING CONDUCTOR IN CONDCTOR

CONCRETE RING AROUND BOX

UG CONDUIT 36" BELOW GRADE TERMINATE W/INSULATING BUSHING SEE TRENCH SECTION DETAIL

COMPACTED EARTH

GRAVEL 6" DEEP

PULL BOX DETAIL

NOT TO SCALE



EXISTING INTERIOR DRISTRIBUTION PANEL
INSTALL NEW PANEL COVER
AND CLOSE EXISTING CIRCUIT BREAKER'S SLOT.

COVERED BASKETBALL COURT

SCALE: NOT TO SCALE

ON KEY LLC

IMPORTANT NOTICE:

ALL DESIGNS, DRAWINGS AND COPIES ISSUED BY B. QUINONES, ARE PROPERTY OF B. QUINONES, AND CANNOT BE REPRODUCED OR EXHIBITED IN ANY MANNER OR PLACE EXCEPT FOR THE PURPOSE OF ITS DESIGN INTENT OR BY WRITTEN CONSENT OF B. QUINONES. IF FOR ANY REASON, PART OR ALL OF THE B. QUINONES DESIGN IS ISSUED OR BUILT WITHOUT B.QUINONES CONSENT, THE PARTIES INVOLVED SHALL PAY B. QUINONES FEE IN FULL.

Project Name and Address:
Urb. El Rosario
Facility Repair
Calle 3
Vega Baja, Puerto Rico

Client Name and Address:
DEPARTAMENTO DE RECREACION Y DEPORTES DE PR
PO Box 9023207 San Juan
PR 00902-3207
Tel. (787) 721 2900 Fax: (787) 268-1545
www.drd.pr.gov

Design by: B. QUINONES

No.	Revision/Issue	Plot Date:

Brendaly Quiñones Villoldo
Ingeniero Licenciado
Lic. 17715 PE
Puerto Rico
Fecha de Expiración: 2024-06-10

HARD COPY SIGNATURE AND SEAL
ENG. BRENDALY QUIÑONES Lic. # 17715

DRD
DEPARTAMENTO DE RECREACIÓN Y DEPORTES
PO Box 9023207
San Juan PR
00902–3207

In this Page:
PROPOSED ELECTRICAL SITE PLAN

Scale: NOT TO SCALE
Details scale: AS NOTED

Job #: 2023-000502
Date: MAR 12, 2024
Check by:AUG 19, 2024
Sheet No.
E-01

GENERAL ELECTRICAL NOTES:

1. ALL WORK SHALL BE STRICTLY COORDINATED WITH OWNER'S REPRESENTATIVE, A WRITTEN NOTICE TO PROCEEDE FROM THE OWNER IS REQUIRED PRIOR START THE CONSTRUCTION WORKS. ALL MATERIALS AND INSTALLATION SHALL CONFORM TO THE OWNER'S STANDARDS AND SPECIFICATION.
2. ELECTRICAL CONTRACTOR SHALL PROVIDE ALL REQUIRED INSURANCES ACCORDING TO OWNER'S REPRESENTATIVE FOR PROTECTION AGAINST PUBLIC LIABILITY AND PROPERTY DAMAGE.
3. ALL ELECTRICAL CONSTRUCTION WORKS SHALL BE DONE IN A THOROUGH AND WORKMANLIKE MANNER BY A LICENSED CONTRACTOR FOR A FULLY OPERATIVE SYSTEM IN ACCORDANCE WITH THE PLANS, SPECS AND CONSTRUCTION DRAWINGS. THE LATEST EDITIONS OF THE NATIONAL ELECTRICAL, FIRE AND LOCAL CODES HAVING JURISDICTION SHALL BE FOLLOWED.
4. ELECTRICAL CONTRACTOR SHALL VISIT THE PROJECT PRIOR QUOTATION AND SHALL ADJUST HIS WORK TO ALL CONDITIONS FOUNDED ON SITE ACCORDING TO ARCHITECTURAL, CIVIL, STRUCTURAL, PLUMBING, MECHANICAL AND ELECTRICAL DRAWINGS. ALL ADJUSTMENTS AND CHANGES REQUIRED DUE TO EXISTING CONDITIONS SHALL BE INCLUDED IN HIS QUOTATION.
5. SPECIAL CONDITIONS APPLY TO ELECTRICAL DRAWINGS, THEY ARE SCHEMATICS. ELECTRICAL CONTRACTOR SHALL INCLUDE IN HIS QUOTATION ALL COSTS NECESSARIES TO PROVIDE A COMPLETE INSTALLATION READY FOR USE ACCORDING TO DRAWINGS AND SPECIFICATIONS.
6. ELECTRICAL CONTRACTOR SHALL COORDINATE WITH MANUFACTURER'S SUPPLIER EXACT REQUIREMENTS FOR THE INSTALLATION AND PROTECTION OF ALL ELECTRICAL EQUIPMENTS AND MATERIALS PRIOR QUOTATION. ALL EQUIPMENTS AND MATERIALS SHALL BE NEW EXCEPT UNLESS OTHERWISE INDICATED AND SHALL BEAR UNDERWRITTERS AND UNION LABLES.
7. ELECTRICAL CONTRACTOR IS RESPONSIBLE TO FURNISH AND INSTALL ALL ELECTRICAL EQUIPMENTS INCLUDING CONTROL PANELS, OUTLETS, DEVICES, WIRING, ETC. ACCORDING TO DRAWINGS UNLESS OTHERWISE INDICATED.
8. ALL DISTRIBUTION PANEL BOARDS SHALL BE CONSTRUCTED WITH A GROUND BUS SEPARATE FROM NEUTRAL ONE TO CONNECT ALL GROUNDING GREEN WIRES. CIRCUIT BREAKERS SHALL BE BOLT–ON TYPE, PLUG–IN TYPE NOT ALLOWED. PROVIDE IDENTIFICATION OF ALL BRANCH CIRCUITS ON A TYPEWRITTEN DIRECTORY CARD IN THE PANEL DOOR.
9. ELECTRICAL CONTRACTOR SHALL BE RESPONSIBLE FOR BALANCING ALL LOADS ON DISTRIBUTION PANELBOARD. MAXIMUN LOAD FOR EACH BRANCH CIRCUITS IS EIGHTY PERCENT. (80%)
10. ALL WIRING DEVICE SHALL BE SPECIFICATION GRADE.

CS CONTRACTOR SELECT™ — LITHONIA LIGHTING

EQUAL OR SIMILAR

Contractor Select™

CNY LED

Canopy Lighting

Catalog Number	
Notes	
Type	



The CNY LED canopy luminaires are versatile, energy-efficient solutions for surface-mount applications. Available in two sizes, these luminaires can replace a wide range of existing canopy luminaires; anything from CFL to 400W metal halide. An LED array light source coupled with a translucent polycarbonate lens creates visually comfortable illumination that is far superior to similar products that use a single bright LED and clear lenses. Smooth sides greatly enhance the aesthetic of this product making it suitable for wider range of applications than industrial-looking finned products.

FEATURES:

- Energy efficient – Can save up to 80% when replacing metal halide
- LED array light source and translucent lens for visually comfortable illumination
- Quick-mount feature eliminates the need to open luminaire for installation
- DLC Premium listed

Catalog Number	UPC	Description	Replaces Up To	Lumens	Wattage	CCT	Voltage	Finish	Pallet qty.
CNY LED P1 40K MVOLT DDB M4	191984909320	CANOPY LUMINAIRE	150W METAL HALIDE	4,500	35W	4000K	120-277V	DARK BRONZE	48
CNY LED P2 40K MVOLT DDB M4	191984909344	CANOPY LUMINAIRE	250W METAL HALIDE	6,600	52W	4000K	120-277V	DARK BRONZE	48

Accessories: *Ordered and shipped separately.*

CNYBLCP 14 Inch x 14 Inch Beauty Cover Plate

CANOPY LIGHTING FIXTURE

SCALE: NOT TO SCALE

Datasheet: **SportsCluster® Lighting System**

TLC for LED®

EQUAL OR SIMILAR

Lighting System for Mounting to Existing Structures

- Factory wired, aimed, and tested
- Easy installation to existing structures
- Comprehensive corrosion package
- Grounding connection for bonding to pole or down conductor

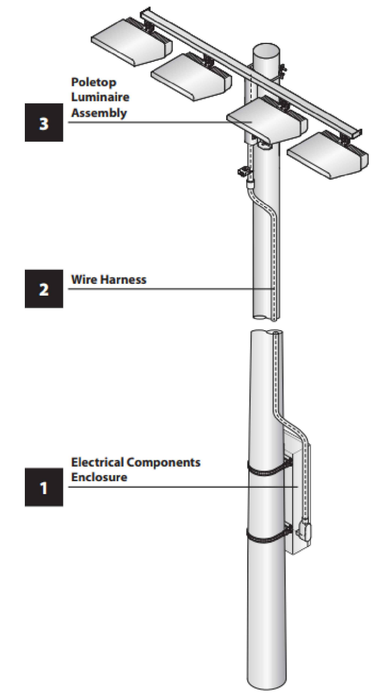

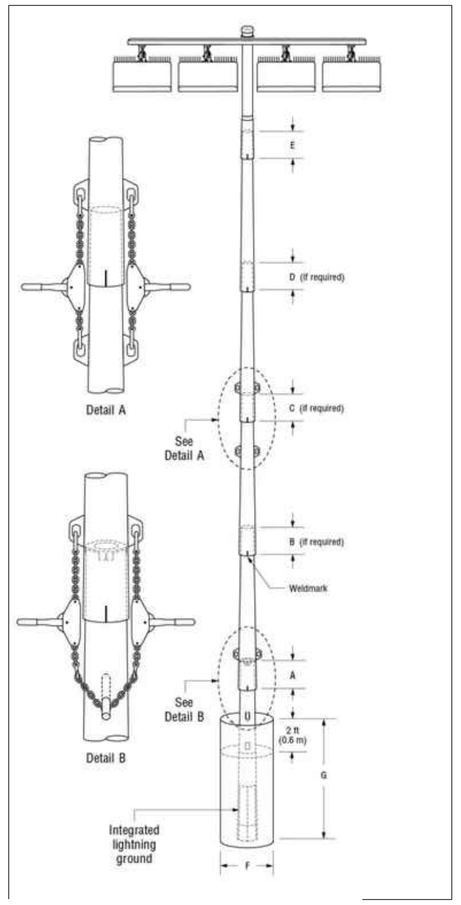

TLC for LED is a trademark of Musco Sports Lighting, LLC and is registered in the United States. ©2015, 2019 Musco Sports Lighting, LLC • U.S. and foreign patent(s) issued and pending. • M-1927 rev04.4

musco — www.musco.com – lighting@musco.com

Foundation Notes:

1. Concrete backfill is calculated to 2 ft (0.6m) below grade (no overage included). Top 2 ft (0.6m) to be class 5 soil compacted to 95% density of surrounding undisturbed soil unless otherwise specified in stamped structural design.
2. Concrete backfill required 3000 lb/in² (20 MPa) minimum.
3. Foundation design per 2018 IBC, 170 mph, exposure category C, variation STD (Risk Category II).
4. Assumes IBC class 5 soils.
5. Standard bases include integrated lightning protection. If bases are cut, supplemental lightning protection is required. Contact Musco for materials and instruction.
6. Lightning protection is a manufacturer installed concrete encased electrode and connector. Ground connection is made when concrete base is installed and footing is poured. No additional steps required.

BASEBALL FIELD POLE

SCALE: NOT TO SCALE

SYLVANIA Luminaires

ValueLED™ Area Light 3A

EQUAL OR SIMILAR

Application

The SYLVANIA ValueLED Area Light 3A luminaires are the perfect alternative to traditional lighting technologies, offering a variety of solutions to illuminate parking lots, parking garage roofs and general area lighting.

Benefits and Features

- IP65 rated body offered in a modern and sleek design
- Each luminaire ships with a universal mounting accessory for round/square pole mounting and tenon mounting
- DLC Premium listed to maximize rebate opportunities
- Integrated 3 pin photocontrol receptacle compatible with Standard NEMA photo cell. Shorting cap included
- Up to 135 LPW
- 4000K and 5000K color temperatures
- CRI >70
- Offered in 150 and 300 watts
- Type III and V distribution
- Energy savings up to 73%

Electrical

- 120-277Vac
- Power Factor >90%
- THD <20%
- 0-10V dimmable

Optical

- Lens is polycarbonate

Rated Life

- 100,000 hours (L_{70}) @25°C

Warranty

- 5-year

Ambient Operating Range

- -40°F to +102°F (-40°C to +40°C)



Wattage Comparison

Traditional Source	Traditional System Wattage	LED System Wattage	Energy Savings
250W MH	290W	150W	48%
250W HPS	295W	150W	49%
320W MH	370W	150W	59%
750W HPS	820W	300W	63%
750W MH	840W	300W	64%
1000W MH	1680W	300W	72%
1000W HPS	1100W	300W	73%

Certifications and Listings

- cULus
- RoHS
- FCC
- IP65
- DLC Premium

Installation

- Each luminaire ships with a universal mounting accessory for round/square pole mounting

EXTERIOR WALL/ROOF LIGHTING

SCALE: NOT TO SCALE

ON KEY LLC

IMPORTANT NOTICE:

ALL DESIGNS, DRAWINGS AND COPIES ISSUED BY B. QUINONES, ARE PROPERTY OF B. QUINONES, AND CANNOT BE REPRODUCED OR EXHIBITED IN ANY MANNER OR PLACE EXCEPT FOR THE PURPOSE OF ITS DESIGN INTENT OR BY WRITTEN CONSENT OF B. QUINONES. IF FOR ANY REASON, PART OR ALL OF THE B. QUINONES DESIGN IS ISSUED OR BUILT WITHOUT B.QUINONES CONSENT, THE PARTIES INVOLVED SHALL PAY B. QUINONES FEE IN FULL.

Project Name and Address:
Urb. El Rosario
Facility Repair
Calle 3
Vega Baja, Puerto Rico

Client Name and Address:
DEPARTAMENTO DE RECREACION Y DEPORTES DE PR
PO Box 9023207, San Juan
PR 00902-3207
Tel. (787) 721 2800 Fax: (787) 268-1545
www.drd.pr.gov

Design by: B. QUINONES

No.	Revision/Issue	Plot Date:

Brendaly Quiñones Villodas — Ingeniero Licenciado — Lic. 17715 PE — Puerto Rico

Fecha de Expiración: 2024-06-10

HARD COPY SIGNATURE AND SEAL
ENG. BRENDALY QUIÑONES Lic. # 17715

DRD DEPARTAMENTO DE RECREACIÓN Y DEPORTES

PO Box 9023207
San Juan PR
00902–3207

In this Page:

PROPOSED LIGHTING FIXTURES AND NOTES

Scale: NOT TO SCALE
Details scale: AS NOTED

Job #: 2023-000502
Date: MAR 12, 2024
Check by: AUG 19, 2024

Sheet No.
E-02

UPLAY TODAY™

EQUAL OR SIMILAR

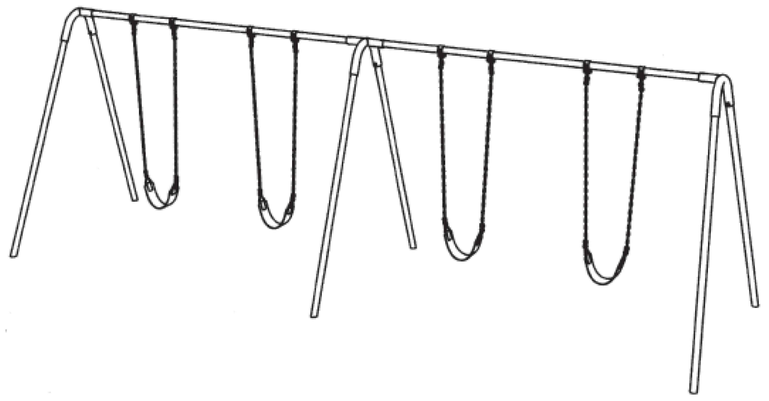

MODEL # PBP-8-2S (Set of 4 Strap Seats)
MODEL # PBP-8-2C (Set of 4 Infant Seats)
MODEL # PBP-8-2SC (Set of 2 Strap Seats and 2 Infant Seats)

Double Bay Swings

ASSEMBLY INSTRUCTIONS

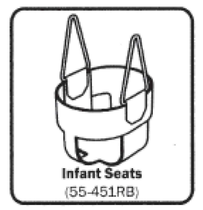

02-10-15

SPECIFICATIONS

SPECIFICATIONS:

Yokes: Welded from 2-7/8" O.D. galvanized tubing with a baked on powder coated paint finish.
Swing beams: 2-3/8" O.D. galvanized tubing.
Legs: 2-3/8" O.D. galvanized tubing.
Hardware: Stainless steel or zinc plated.
Weight: 425 lbs.

NEW SWING SET OF FOUR (4)

SCALE: NOT TO SCALE

ALTERNATE NUM. 1 (ADDITIVE) PLAYGROUND EQUIPMENT

INSTALLATION OF PLAYGROUND EQUIPMENT SCOPE:

1) Supply and install new 10' freestanding metal slide:
   a. One (1) ea.
2) Supply and install new four (4) seat seesaw:
   a. One (1) ea.
3) Supply and install new swing set:
   a. One (1) ea.
4) Supply and install new monkey bars:
   a. One (1) ea.

EQUAL OR SIMILAR

See Saw
#SW3007
Equal or Similar

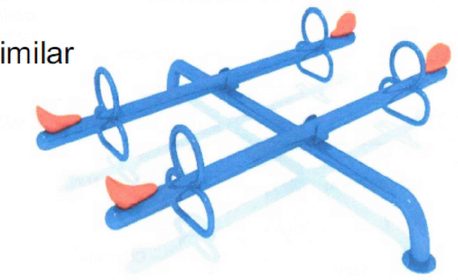

4 Seat See Saw

- **Pipe Arm:** 5" Diameter, galvanized pipe, powder coated paint finish
- **Handles / Foot Rests: Formed from 1- ¼"** galvanized pipe, powder coated
- **Seats:** Molded Polyethylene
- **Hardware / Nuts and Bolts:** Stainless Steel
- **Unit Size (ft)** 10' * 8' * 1.5' (L* W*H)
- **Safety Area (ft)** 22' * 20' (L*W)
- **Age Range:** 3-12 years
- **Kids Capacity:** 4 kid
- **Concrete Pedestal** :12" x 12" X 18"
- **Weight:** 220 lbs.
- ADA Compliant

NEW SEESAW OF FOUR (4) SEATS

SCALE: NOT TO SCALE

EQUAL OR SIMILAR

Horizontal Ladder
"Monkey Bar"



Specifications

- **Great physical fitness trainer for arm strength and endurance development**
- Vertical Ladder Frame are fabricated from 5" O.D.
- 10 gauge galvanized steel tubing with 1-3/4" O.D.
- Weld assembly shall be powder coated after fabrication.
- Steel tubing rungs are 1-3/4" O.D. 14
- Weight: 220 lbs.
- **STEEL COLORS**

NEW MONKEY BAR

SCALE: NOT TO SCALE

EQUAL OR SIMILAR

Single Slide
#HT090

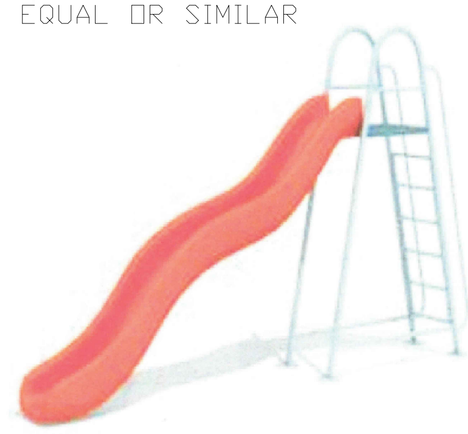

Single Slide HT090

6ft Height

- **Ladder / Uprights:** Ladder shall be 1.5"/ Shall be 2.5" O.D. steel tubing, 12 gauge (.109 wall), powder coated after fabrication.
- **Decks:** Shall be 12 gauge punched steel with a PVC coating. Intermediate supports are fabricated from 1/8"x 2-1/2" hot rolled steel.
- **Platform:** PVC coating 24"x 32"
- **Slide:** Slide shall be low density polyethylene / UV Resistance LLDPE
- **Hardware / Nuts and Bolts:** Stainless Steel
- **Safety Area (ft)** 27' *15' (L*W)
- **Age Range:** 3-12 years
- **Kids Capacity:** 1 kid
- **Unit Size (ft)** 15' * 3' * 8' (L* W*H)
- **Concrete Pedestal** :12" x 12" X 18"
- **Weight Max:** 175 lbs.
- ADA Compliant

FOOTING DETAIL **NOTE:** Suggested minimum concrete rating: 3000 PSI

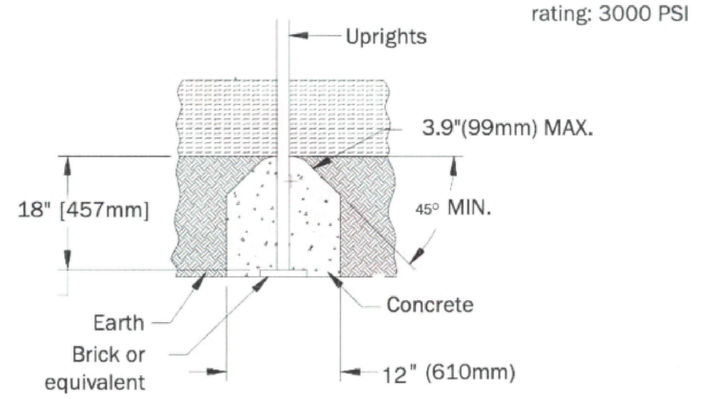

NEW 8 FT SLIDE

SCALE: NOT TO SCALE

ON KEY LLC

IMPORTANT NOTICE:

ALL DESIGNS, DRAWINGS AND COPIES ISSUED BY B. QUINONES, ARE PROPERTY OF B. QUINONES, AND CANNOT BE REPRODUCED OR EXHIBITED IN ANY MANNER OR PLACE EXCEPT FOR THE PURPOSE OF ITS DESIGN INTENT OR BY WRITTEN CONSENT OF B. QUINONES. IF FOR ANY REASON, PART OR ALL OF THE B. QUINONES DESIGN IS ISSUED OR BUILT WITHOUT B.QUINONES CONSENT, THE PARTIES INVOLVED SHALL PAY B. QUINONES FEE IN FULL.

Project Name and Address:
Urb. El Rosario
Facility Repair
Calle 3
Vega Baja, Puerto Rico

Client Name and Address:
DEPARTAMENTO DE RECREACION Y DEPORTES DE PR
PO Box 9023207, San Juan
PR 00902-3207
Tel. (787) 721-2800 Fax: (787) 268-1545
www.drd.pr.gov

Design by: B. QUINONES

No.	Revision/Issue	Plot Date:

Brendaly Quiñones Villodas
Ingeniero Licenciado
Lic. 17715 PE
Puerto Rico
Fecha de Expiración: 2024.06.10
HARD COPY SIGNATURE AND SEAL
ENG. BRENDALY QUINONES Lic. # 17715

DRD
DEPARTAMENTO DE RECREACIÓN Y DEPORTES
PO Box 9023207
San Juan PR
00902-3207

In this Page:
ALTERNATE 1
PLAYGROUND DETAILS

Scale: NOT TO SCALE
Details scale: AS NOTED

Job #: 2023-000502
Date: MAR 11 2024
Check by: AUG 19, 2024
Sheet No.
ALT -01

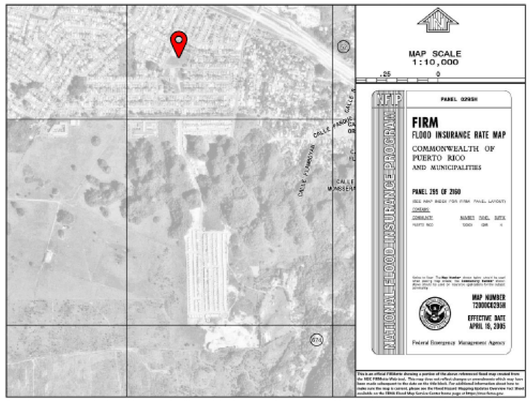

FLOOD MAP

SCALE: NOT TO SCALE

MAP NUMBER: 72000C0295H
EFFECTIVE DATE: APRIL 19, 2005
FLOOD ZONE: X

DRD
DEPARTAMENTO DE RECREACIÓN Y DEPORTES

URB EL ROSARIO, VEGA BAJA

18°26'02.8"N 66°23'39.8"W
18.434100, -66.394400

- A — LAT. 18.435554, LONG. -66.394473
- B — LAT. 18.433512, LONG. -66.395105
- C — LAT 18.435194, LONG. -66.393621
- D — LAT. 18.433474 LONG. -66.394027

EXHIBIT A - FOUR CORNERS COORDINATES



DRD
DEPARTAMENTO DE RECREACIÓN Y DEPORTES

URB EL ROSARIO, VEGA BAJA

18°26'02.8"N 66°23'39.8"W
18.434100, -66.394400

No disturbed areas, waterways or wetlands.

EXHIBIT B – VICINITY MAP

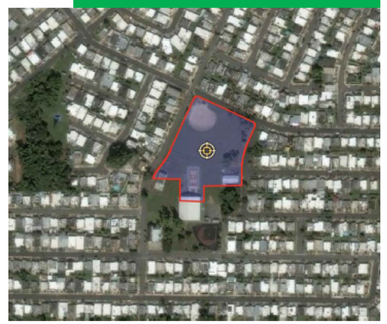

LOCATION MAP

SCALE: NOT TO SCALE

FEMA PA CODE: (000-UFXSJ-00)
PROJECT NUMBER: 87524
PW NUMBER: 1863
DAMAGE INVENTORY NUMBER: 253943
DR NUMBER: 4339

DRD
DEPARTAMENTO DE RECREACIÓN Y DEPORTES

URB EL ROSARIO, VEGA BAJA

18°26'02.8"N 66°23'39.8"W
18.434100, -66.394400

Existing footprint will remain.

EXHIBIT C – PROPOSED FOOTPRINT



URB EL ROSARIO FACILITY REPAIR, VEGA BAJA, PR

CALLE 3
VEGA BAJA, PUERTO RICO

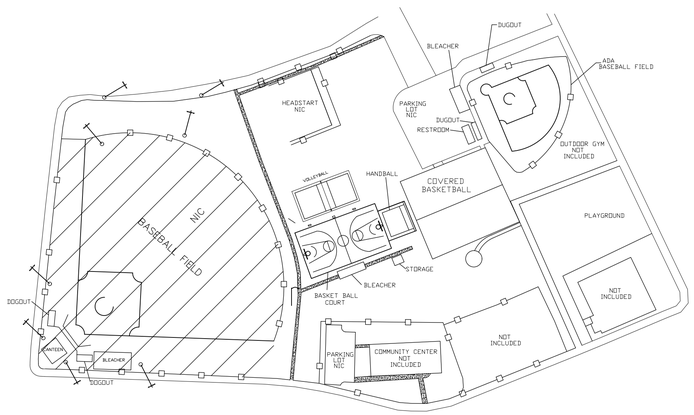

SITE PLAN
NOT TO SCALE

SHEET INDEX

SHEET	NAME	DESCRIPTION
1	T-01	TITLE
2	SI-01	SITE PLAN
3	A-01	PROPOSED SCOPE OF WORK
4	A-02	PROPOSED PAINT WORK
5	A-05	PROPOSED DETAILS
6		
7		
8	A-06	PROPOSED CHAIN LINK GATE DETAIL
9	A-07	SIGN DETAILS AND NOTES
10	S-01	NEW BLEACHERS CANOPY DETAIL
11	S-02	CANOPY FOOTING DETAIL
12	E-01	PROPOSED ELECTRICAL WORK
13	E-02	PROPOSED LIGHTINGS AND NOTES

ON KEY LLC

IMPORTANT NOTICE:
ALL DESIGNS, DRAWINGS AND COPIES ISSUED BY B. QUINONES, ARE PROPERTY OF B. QUINONES, AND CANNOT BE REPRODUCED OR EXHIBITED IN ANY FORM WHATSOEVER, EXCEPT FOR THE PURPOSE OF ITS DESIGN, WITHOUT OR BY WRITTEN CONSENT OF B. QUINONES. IF FOR ANY REASON, PART OR ALL OF THE B. QUINONES DESIGN IS ISSUED OR BUILT WITHOUT B.QUINONES CONSENT, THE PARTIES INVOLVED SHALL PAY B. QUINONES FEE IN FULL.

Project Name and Address:
Urb El Rosario
Facility Damage Repair
Calle 3
Vega Baja, Puerto Rico

Client Name and Address:
DEPARTAMENTO DE RECREACION Y DEPORTES DE PR
PO Box 9023207 San Juan
PR 00902-3207
Tel. (787) 721-2800 Fax: (787) 268-1845
www.drd.pr.gov

Design by: B. QUINONES

No.	Revision/Issue	Plot Date:

Brendaly Quiñones Villodas
Ingeniero Licenciado
Lic. 17715 PE
Puerto Rico
Fecha de Expiración: 2024-06-10

HARD COPY
SIGNATURE AND SEAL
ENG. BRENDALY QUINONES Lic. # 17715

DRD
DEPARTAMENTO DE RECREACIÓN Y DEPORTES

PO Box 9023207
San Juan PR
00902-3207

In this Page:
TITLE SHEET

Scale:
Details scale: AS NOTED

Job #: 2023-000123
Date: MAR 12, 2024
Check by: AUG 19, 2024
Sheet No.
T-01



LOCATION PLAN

NOT TO SCALE

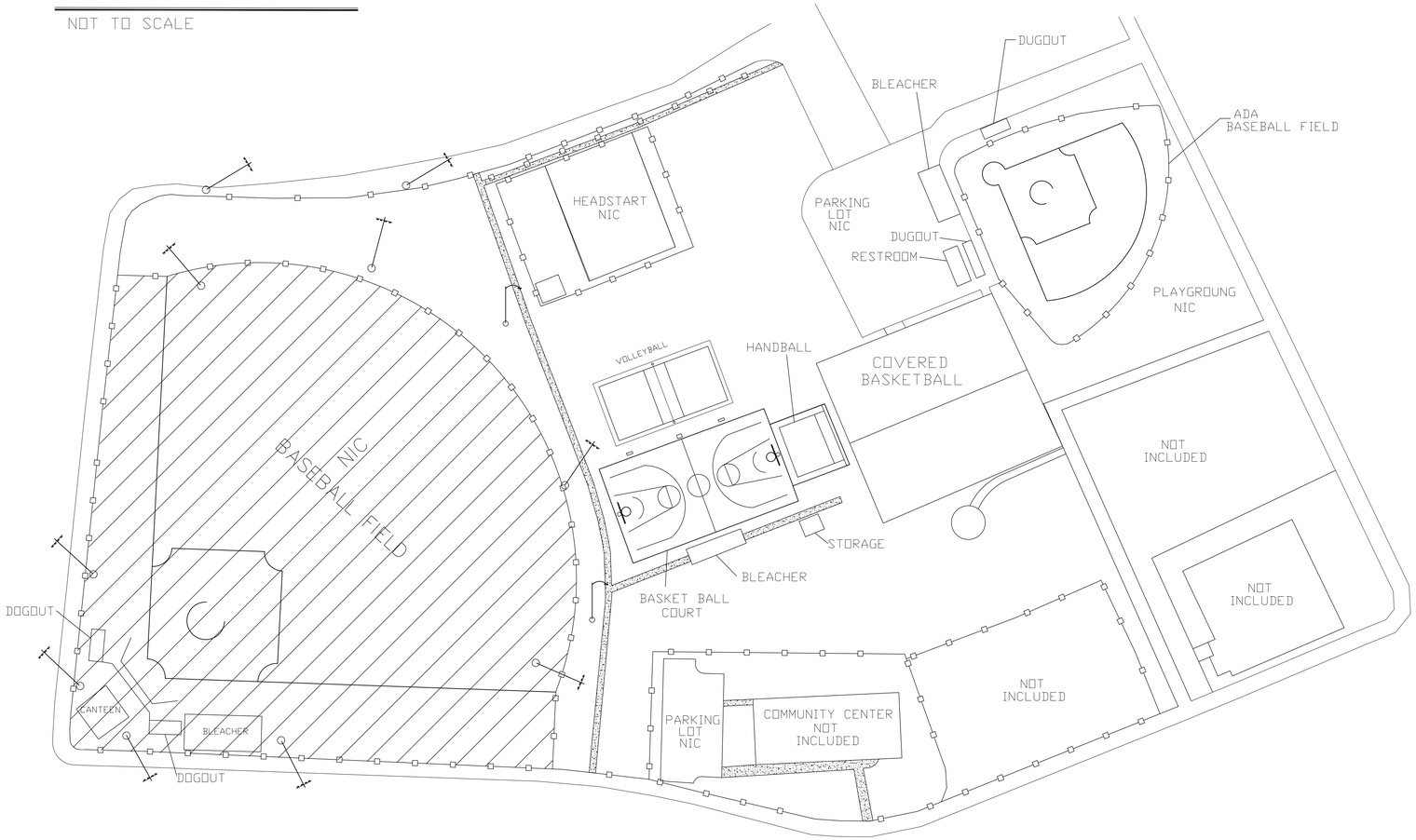

SITE PLAN

NOT TO SCALE

GENERAL NOTES

NOTES:

1- In activities that backfill is required the contractor must use A-2-4 or similar compacted in layers of 6" inches thickness at 95% and been verified by laboratory tests, which will be paid by the contractor.

2. All document included in this bidding process are part of the contract.

3. The contractor shall connect the structure to the existing water and sewer connection services of the site if it where not connected.

4. Demolition and construction disposal will be contractor's responsibility.

5. The contractor will be responsible to implement Plan CEST, PFE (Permiso de Fuente de Emision) and DS3 (Desperdicios Solidos no Peligrosos) as required by the Junta de Calidad Ambiental. (If required)

6. The contractor shall maintained the site clean and free of debris during work in progress.

7. A boundary shall be identified on field to isolated the construction area from the areas that are not impacted. The limit will be defined using a temporary fence that must be provided by the contractor.

8. The contractor will be responsible for all the demolition and debris disposal during the construction. Everything must be coordinated with the Consultant including any foundation demolition if it where the case.

9. "The contractor will plant Soisa Meyer grass in tight squares in all the Green areas affected by the construction.

10. All site dimensions must be verified on site by the contractor.

11. The contractor shall be responsible for any damage cause by the contractor or his employee to the existing infrastructure on the field.

12. All sidewalks finishes shall be broom finish.

13. The contractor shall be familiarized with the existing site conditions before the bidding.

14. The construction site perimeter will be protected with a temporary fence.

15. The contractor will submit a work plan in addition to the cost breakdown for payment for owner's Consultant approval.

16. If applicable any slopes that are generated on the site will not have a slope greater than 1:1 and shall be duly stabilized with Jute or a Similar approved geotextile product and Soysa Meyer grass will be tightly installed for permanent stabilization.

17. The contractor Will familiarize himself with the included Electrical and structural notes and specifications where applicable.

Buy American Act Requirements:

Buy American requirements apply to purchases of iron, steel, and other manufactured products permanently incorporated into infrastructure projects. To be considered as being produced in the U.S., goods must be manufactured in the U.S. and at least 50% of the cost of their components must come from the U.S.

Additional Notes:

1) The contractor is responsible to verify the existing electrical system conditions and shall repair any damage found and leave the project fully operational, properly grounded, coordinated with all the other trades and with all the required equipment, interconnections, fittings, and appurtenances necessary for the safe operation of his intended use.

2) All the electrical installation shall be done in a neat and workmanlike manner, according to the latest edition of the National Electrical Code (N.E.C.), the Puerto Rico Electric Power Authority (LUMA) latest standards and the Negociado de Telecomunicaciones de Puerto Rico latest practices.

3) The contractor shall visit the job site and become acquainted with the existing field conditions.

4) The contractor shall submit with the proposal, the proposed Synthetic Acrylic System specifications with the warranty terms and conditions. The system must be equal or similar to the specified and shall comply with a minimum of minimum five (5) year warranty, excluding damages by improper use and wear due to normal use.

5) The contractor is responsible to comply with all laws, regulations, codes, professional licenses required by Municipal, State, Federal and Local laws.

6) To all existing concrete surface (where occur) – All spalling concrete must be repaired. Chip the existing loose concrete and treat the exposed rebar. Clean with a steel brush and apply (equal or similar) Loctite Extend Rust Neutralizer, apply (equal or similar) Sika Armatec – 110 EpoCem and then patch and finish the affected area with Vinyl Concrete Patch. For all product, follow the manufacturer mixing and application recommendations.

7) All basketball court marking paint must be Multisport Court (Basketball and Volleyball) as specified. Where volleyball pole system is missing, the contractor must include the new volleyball net pole system as per specifications.

ON KEY LLC

IMPORTANT NOTICE:

ALL DESIGNS, DRAWINGS AND COPIES ISSUED BY B. QUINONES, ARE PROPERTY OF B. QUINONES, AND CANNOT BE REPRODUCED OR EXHIBITED IN ANY MANNER OR PLACE EXCEPT FOR THE PURPOSE OF ITS DESIGN INTENT OR BY WRITTEN CONSENT OF B. QUINONES. IF FOR ANY REASON, PART OR ALL OF THE B. QUINONES DESIGN IS ISSUED OR BUILT WITHOUT B.QUINONES CONSENT, THE PARTIES INVOLVED SHALL PAY B. QUINONES FEE IN FULL.

Project Name and Address:
Urb. El Rosario
Facility Damage Repair
Calle 3
Vega Baja, Puerto Rico

Client Name and Address:
DEPARTAMENTO DE RECREACION Y DEPORTES DE PR
PO Box 9023207 San Juan
PR 00902-3207
Tel. (787) 721 2800 Fax: (787) 268-1645
www.drd.pr.gov

Design by: B. QUINONES

No.	Revision/Issue	Plot Date:

Brendaly Quiñones Villodas
Ingeniero
Licenciado
Lic. 17715 PE
Puerto Rico
Fecha de Expiración: 2024-06-10
ANNS COPY
SIGNATURE AND SEAL
ENG. BRENDALY QUINONES Lic. # 17715

DRD
DEPARTAMENTO DE RECREACIÓN Y DEPORTES
PO Box 9023207
San Juan PR
00902-3207

In this Page:

EXISTING SITE PLAN

Scale:	Details scale:
NOT TO SCALE	AS NOTED

Job #: 2023-000502
Date: MAR 12, 2024
Check by:AUG 19, 2024

Sheet No.

SI-01

PROPOSED SCOPE OF WORK

Urb El Rosario Facility Damages Repair

Outdoor Surfaces

Ⓐ Facility Damage – Handball Court

1) Remove existing handball court markings. See Handball Court Technical Specifications.
   a. Apply a paint stripper.
   b. Scrape away the paint.
   c. Rinse the concrete with a pressure washer.
2) Paint handball court markings. Use acrylic system see Multi-sport Technical Specifications.
3) See Multisport Court Technical Specifications and marking layout on drawings.
4) Dimensions: 60' x 65'. One (1) ea. (3,900 SF)



Ⓑ Facility Damage – Multisport Court

1) Remove existing basketball court markings. See Multisport Court Technical Specifications.
   a. Apply a paint stripper.
   b. Scrape away the paint.
   c. Rinse the concrete with a pressure washer.
2) Supply and install new basketball goal pole set of two (2), new acrylic basketball goal boards. Two (2) ea. See Details.
3) Supply and install new Volleyball Ground Sleeves Kits, equal to or similar to Jaypro PVB-75S. (2ea.)
4) Paint multisport court markings, volleyball net poles, and goal poles. See Multisport Court Technical Specifications.
5) See paint in general specifications.
6) Dimensions: 60' w x 110' l. (6,600 SF)



Ⓒ Alternate Num. 1 (Additive) - Facility Damage – ADA Baseball Field -Playground Field

1) Repair existing surface. Remove existing system and install new spray coat system. Use ½" min. Rubber surface thickness. Equal or similar to OAFA Rubber Product. (11,250 SF Approx.). Repair Cracks and sub-base asphalt surface before rubber installation as recommended by manufacturer.

Alternate Num. 2 (Additive) - Facility Damage – ADA Baseball Field -Playground Field

1) Repair existing surface. Remove existing system and install new Acrylic Synthetic Sport Flooring System. Use ½" min. Rubber surface thickness. Equal or similar to OAFA Rubber Product. (11,250 SF Approx.). Repair Cracks and sub-base asphalt surface before rubber installation as recommended by manufacturer.



ON KEY LLC

IMPORTANT NOTICE:

ALL DESIGNS, DRAWINGS AND COPIES ISSUED BY B. QUINONES, ARE PROPERTY OF B. QUINONES, AND CANNOT BE REPRODUCED OR EXHIBITED IN ANY MANNER OR PLACE EXCEPT FOR THE PURPOSE OF ITS DESIGN INTENT OR BY WRITTEN CONSENT OF B. QUINONES. IF FOR ANY REASON, PART OR ALL OF THE B. QUINONES DESIGN IS ISSUED OR BUILT WITHOUT B.QUINONES CONSENT, THE PARTIES INVOLVED SHALL PAY B. QUINONES FEE IN FULL.

Project Name and Address:
Urb. El Rosario
Facility Damage Repair
Calle 3
Vega Baja, Puerto Rico

Client Name and Address:
DEPARTAMENTO DE RECREACION Y DEPORTES DE PR
PO Box 9023207
PR 00902-3207
Tel. (787) 721 2800 Fax: (787) 268-1545
www.drd.pr.gov

Design by: B. QUINONES

No.	Revision/Issue	Plot Date:

Brendaly Quiñones Villoldas
Ingeniero Licenciado
Lic. 17715 PE
Puerto Rico
Fecha de Expiración: 2024-06-10

HARD COPY
SIGNATURE AND SEAL
ENG. BRENDALY QUIÑONES Lic. # 17715

DRD
DEPARTAMENTO DE RECREACIÓN Y DEPORTES

PO Box 9023207
San Juan PR
00902-3207

In this Page:

PROPOSED
SCOPE OF WORK

Scale:	Details scale:
NOT TO SCALE	AS NOTED

Job #: 2023-000502
Date: MAR 12, 2024
Check by:AUG 19, 2024

Sheet No.
A-01

Multisport Court Repair Scope of Work

Multisport Acrylic Synthetic Flooring System

Technical Specification

Basketball Court Surface Preparation

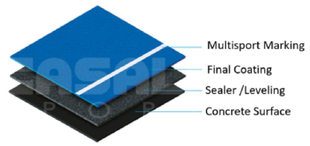

Acrylic Synthetic Sport Flooring System

EQUAL OR SIMILAR

EQUAL OR SIMILAR TO POLYSPORT SYSTEM BY OAFA

1) Concrete surface preparation

- Remove existing surface paint with paint removal product.
- Product should be compatible with acrylic system product.
- Scarify existing concrete.
- Pressure washes existing scarified concrete surface to remove all remaining dust.
- Treat all concrete cracks with product compatible and recommended by system's manufacturer.
- Seal existing concrete surface applying a synthetic resin-based filler using an acrylic resin based coating containing select sands, in water emulsion, especially formulated to seal concrete surfaces. Be sure that the product is compatible and recommended by system's manufacturer.

CHARACTERISTICS OF THE LIQUID PRODUCT			
Characteristic	**U.M.**	**Value**	**Tolerance**
Specific weight	Kg/dm³	1,64	± 0,1
Dry mass residue	%	75	± 3
Dry volume residue	%	59	± 3
Residue at 450°C	%	61	± 3
Brookfield viscosity (with Brookfield viscosimeter rotor no. 6, speed 10)	mPa·s	90000	± 5000
pH	-	8	± 1

- Surface must be sloped correctly to ensure rainwater runoff and prevent pooling.

2) Supply and apply Final Acrylic Coating System. Acrylic resin-based covering developed for multi-purpose sports flooring. The hard resin-based formula with UV ray resistant pigments and select sands that makes the ideal sports surfaces for many different games. Resin surfaces must be waterproof (non-draining).

CHARACTERISTICS OF THE LIQUID PRODUCT			
Characteristic	**U.M.**	**Value**	**Tolerance**
Specific weight	Kg/dm³	1,7	± 0,1
Dry mass residue	%	76	± 3
Dry volume residue	%	60	± 3
Residue at 450°C	%	65	± 3
Brookfield viscosity (with Brookfield viscosimeter rotor no. 6, speed 2)	mPa·s	210000	± 12000
pH	-	8	± 1

- Coverage as recommended by manufacturer.
- Ductile and resistant to abrasion
- Weather Resistant
- Maintenance Free
- Always available to play even when a heavy rain or hot weather have occurred.

3) Basketball court marking – use a highly covering acrylic paint, especially developed to mark field (2") lines on acrylic surfaces.

CHARACTERISTICS OF THE LIQUID PRODUCT			
Characteristic	**U.M.**	**Value**	**Tolerance**
Specific weight	Kg/dm³	1,38	± 0,1
Dry mass residue	%	54	± 0,5
Dry volume residue	%	36	± 0,5
Residue at 450°C	%	37	± 0,5
Brookfield viscosity (with Brookfield viscosimeter rotor no. 6, speed 5)	mPa·s	23000	± 2000
pH	-	9	± 1

- See typical color pattern
- See basketball court layout.

Buy American Act Requirements:

Buy American requirements apply to purchases of iron, steel, and other manufactured products permanently incorporated into infrastructure projects. To be considered as being produced in the U.S., goods must be manufactured in the U.S. and at least 50% of the cost of their components must come from the U.S.

PAINT NOTES:

1. ALL INTERIOR AND EXTERIOR WALLS SHALL BE PAINTED WITH THREE COATS OF PAINT. THE INTERIOR THREE COAT SYSTEM CONSISTS OF A SEALER PRIMER COAT AND TWO FINISH COATS WITH 100 % ACRYLIC LATEX PAINT, EGGSHELL FINISH. EXTERIOR THREE COAT SYSTEM CONSISTS OF A QUICK DRY STAIN BLOKER AND SEALER PRIMER AND TWO FINISH COAT OF 100% ACRYLIC PAINT. COLOR TO BE SELECTED BY THE ENGINEER. PATCH AND REPAIR WITH CONCRETE PLASTER ALL SURFACE IF NECESSARY, BEFORE PAINT.

2. ITEMS NOT TO BE PAINTED WHICH ARE IN CONTACT WITH OR ADJACENT TO PAINTED SURFACES SHALL BE REMOVED OR PROTECTED PRIOR TO SURFACE PREPARATION AND PAINTING OPERATIONS. ITEMS REMOVED PRIOR TO PAINTING SHALL BE REPLACED WHEN PAINTING COMPLETED.

3. EXTERIOR WALL TO BE PAINTED SHALL BE CLEAN WITH WATER BLASTER MACHINE AND BE FREE OF FOREING MATTER BEFORE APPLICATION OF PAINT OR SURFACE TREATMENTS. OIL AND GREASE SHALL BE REMOVED PRIOR TO MECHANICAL CLEANING. CLEANING SHALL BE PROGRAMED SO THAT DUST AND OTHER CONTAMINANTS WILL NOT FALL ON WET, NEWLY PAINTED SURFACES.

4. BLISTERING, CRACKING, FLAKING AND PEELING OR OTHER DETERIORATED COATINGS SHALL BE REMOVED. SLICK SURFACES SHALL BE ROUGHENED. DAMAGED AREAS SUCH AS, BUT NOT LIMITED TO, NAIL HOLES, CRACKS, CHIPS, AND SPALLS SHALL BE REPAIRED WITH SUITABLE MATERIAL TO MATCH ADJACENTS UNDAMAGED AREAS.

5. STEEL STRUCTURE SHALL BE SANDED AND PAINTED WITH ONE ANTI –RUST PRIMER AND TWO COAT OF STOPS RUST INDUSTRIAL WATER BASE ENAMEL PAINT. BLISTERING, CRACKING, FLAKING AND PEELING OR OTHER DETERIORATED COATINGS SHALL BE REMOVED.

6. SEE PAINTING SPECIFICATIONS



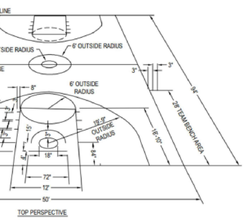

* 2" lines marking
* Logo will be provided by owner.

NOTES:
1. ALL DIMENSIONS ARE TO THE OUTSIDE EDGE OF THE LINES.
2. INSTALLATION TO BE COMPLETED IN ACCORDANCE WITH MANUFACTURER'S SPECIFICATIONS.
3. DO NOT SCALE DRAWING.

DETAILED DRAWINGS
BASKETBALL

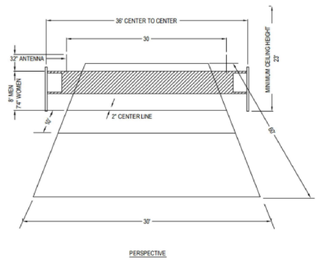

* 2" lines marking

NOTES:
1. INSTALLATION TO BE COMPLETED IN ACCORDANCE WITH MANUFACTURER'S SPECIFICATIONS.
2. DO NOT SCALE DRAWING.

DETAILED DRAWINGS
VOLLEYBALL COURT DETAIL

PAINT BASKETBALL COURT MARKING

SCALE: NOT TO SCALE

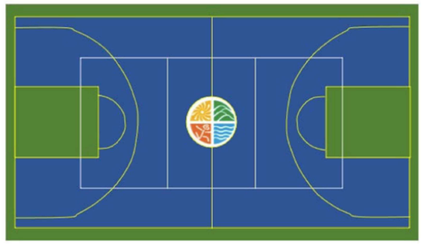

* 2" lines marking
* Logo will be provided by owner.

Color Pattern

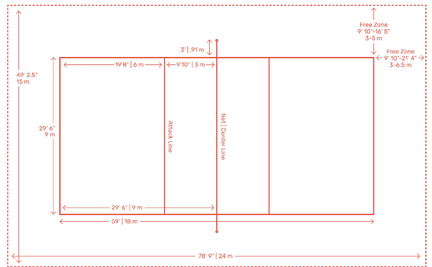

VOLLEYBALL COURT DIMENSIONS

SCALE: NOT TO SCALE

ON KEY LLC

BRENDALY QUINONES
PROFESSIONAL ENGINEER
EMAIL: INFO@ONKEYLLC.US
PHONE: 787 –379–0556

IMPORTANT NOTICE:

ALL DESIGNS, DRAWINGS AND COPIES ISSUED BY B. QUINONES, ARE PROPERTY OF B. QUINONES, AND CANNOT BE REPRODUCED OR EXHIBITED IN ANY MANNER OR PLACE EXCEPT FOR THE PURPOSE OF ITS DESIGN INTENT OR BY WRITTEN CONSENT OF B. QUINONES. IF FOR ANY REASON, PART OR ALL OF THE B. QUINONES DESIGN IS ISSUED OR BUILT WITHOUT B.QUINONES CONSENT, THE PARTIES INVOLVED SHALL PAY B. QUINONES FEE IN FULL.

Project Name and Address:
Urb. El Rosario
Facility Repair
Calle 3
Vega Baja, Puerto Rico

Client Name and Address:
DEPARTAMENTO DE RECREACION Y DEPORTES DE PR
PO Box 9023207
PR 00902-3207
Tel. (787) 721 2800 Fax (787) 268-1845
www.drd.pr.gov

Design by: B. QUINONES

No.	Revision/Issue	Plot Date:

Brendaly Quiñones Villodas
Ingeniera Licenciado
Lic. 17715 PE
Puerto Rico
Fecha de Expiración: 2024-06-10
SIGNATURE AND SEAL
ENG. BRENDALY QUINONES Lic. # 17715

DRD
DEPARTAMENTO DE RECREACIÓN Y DEPORTES

PO Box 9023207
San Juan PR
00902–3207

In this Page:

PROPOSED PAINT WORK

Scale:	Details scale:
NOT TO SCALE	AS NOTED

Job #: 2023-000502
Date: MAY 30, 2023
Check by: AUG 19, 2024

Sheet No.

A-02

DRD-CONDICIONES ESPECIALES SUPLEMENTARIAS

I. DISPOSICIONES RELACIONADAS AL DESARROLLO DEL PROYECTO (según aplique):

a. El Contratista deberá familiarizarse con las condiciones existentes y con todas las particularidades que presenta la estructura a la cual se intervendrá

b. El Contratista será responsable de verificar la ubicación exacta y la condición de todos los componentes del proyecto, así como de los componentes del sistema eléctrico y del sistema de distribución de agua potable que existen en las áreas directamente afectadas por los trabajos correspondientes a este contrato.

c. De surgir alguna discrepancia entre los equipos, accesorios o dispositivos existentes a permanecer y los propuestos, el Contratista será responsable de discutir y aclarar la misma con el inspector y/o representante del dueño, antes de tomar cualquier decisión. El Contratista NO realizará trabajo alguno que considere adicional al contrato sin la autorización previa, por escrito, del inspector o representante designado de la DRD para este proyecto. Estos no serán remunerados

d. Las medidas o especificaciones establecidas como *estándar* en reglamentos y códigos, según el uso y aplicación, deberán predominar siempre sobre lo instalado en sitio o lo indicado en los Documentos de Contrato, a menos que se especifique lo contrario en los mismos. De especificarse lo contrario, el Contratista deberá confirmar dicha información con el inspector y/o representante designado de la DRD.

e. De surgir alguna discrepancia en relación con algún tipo de material, equipo o trabajo especificado, el Contratista deberá considerar que siempre prevalecerán los requisitos más restrictivos, incluyendo mayor cantidad, mayor calidad, mayor nivel de seguridad y el material, equipo o trabajo más exigente, según indicado en los Documentos de Contrato.

f. Todo cambio que surja durante la ejecución de los trabajos incluidos en contrato, ya sea por recomendación del Contratista o mediante una solicitud formal del DRD (a través de su representante designado y/o a través del inspector del proyecto), deberá informarse por escrito mediante carta firmada por el Contratista, con la recomendación y la aprobación de la DRD. De haber algún costo adicional o crédito por dichos trabajos, el mismo deberá mencionarse en dicha carta.

g. Cualquier duda o desacuerdo que tenga el Contratista deberá ser informado al DRD mediante correspondencia escrita, con copia a su representante designado y al inspector del proyecto.

h. El Contratista será responsable de realizar las reparaciones a las superficies y/o instalaciones físicas existentes que hayan sufrido daño por causa de los trabajos o actividades relacionadas al desarrollo de la obra, según sea requerido por el representante designado del DRD. Cualquier ruptura de tuberías, infraestructura mecánica o utilidades eléctricas, causada por los trabajos incluidos en este contrato, deberá ser reparada inmediatamente, de forma tal que los servicios afectados por dicha condición sean restablecidos a la mayor brevedad.

i. El Contratista deberá tomar todas las medidas necesarias para evitar:

j. La propagación de polvo fugitivo procedente de actividades de remoción o demolición selectiva y de acarreo de materiales o escombros, en estricto cumplimiento con las disposiciones establecidas en el Reglamento para el Control de Contaminación Atmosférica de la Junta de Calidad Ambiental (JCA) y la reglamentación federal aplicable.

k. La utilización de materiales y equipo que emitan gases y/o residuos tóxicos al ambiente, en estricto cumplimiento con las disposiciones establecidas en el Reglamento para el Control de Contaminación Atmosférica de la Junta de Calidad Ambiental (JCA) y la reglamentación federal aplicable.

l. La propagación de ruidos procedentes de las áreas impactadas por los trabajos incluidos en contrato que excedan los niveles máximos de ruido permitidos por ley, de acuerdo con las disposiciones establecidas en el Reglamento para el Control de Contaminación por Ruidos de la Junta de Calidad Ambiental (JCA) y la reglamentación federal aplicable.

m. La realización de cualquier actividad que pueda afectar adversamente la salud de los residentes de las comunidades aledañas al mismo, en cumplimiento con todas las leyes y reglamentos ambientales, estatales y federales, que sean aplicables. Es de notar que cualquier multa de OSHA notificada al DRD o al Representante Autorizado, como consecuencia, motivada, o relacionada con la conducta del Contratista por trabajos relacionados a este proyecto, será de la entera responsabilidad del mismo.

n. El Contratista deberá proveer el recipiente, camión o medio de almacenamiento y transporte adecuado para disponer, de forma inmediata (en un periodo de 24 horas del lugar designado en el sitio del proyecto para acumular o almacenar los mismos), de toda la basura o escombros que se generen como consecuencia de los trabajos incluidos en contrato. NO se permitirá la utilización de los recipientes de basura existentes en las instalaciones. Toda basura deberá disponerse con su contenido, de forma tal que, de ser tóxica o contaminante, se cumpla con todas las leyes y reglamentos ambientales (estatales y federales) aplicables a estas actividades. Recae como responsabilidad del Contratista el identificar el contenido del material y disponer del mismo adecuadamente, presentando como evidencia el manifiesto de disposición en original.

ñ. La disposición adecuada de todas las unidades, accesorios y equipos mecánicos/eléctricos a ser removidos como parte de este contrato, deberá realizarse siguiendo las indicaciones del inspector o representante designado del DRD para el proyecto de referencia y en cumplimiento con lo dispuesto en las especificaciones técnicas relacionadas y en todas las leyes y reglamentos ambientales (estatales y federales) aplicables para estas actividades, para lo cual se deberá presentar el correspondiente comprobante de disposición de desperdicios (en original) durante el proceso de desarrollo de estos trabajos.

a. El Contratista deberá implantar todas las medidas de seguridad que estime necesarias para delimitar y rotular las áreas impactadas por los trabajos relacionados a este proyecto, así como las áreas dispuestas para almacenaje de materiales y equipos, de forma tal que se pueda restringir el acceso a las mismas de maestros, estudiantes, empleados u otras personas ajenas a los trabajos incluidos en contrato, durante el desarrollo de la obra.

b. El Contratista deberá coordinar, con el funcionario designado como representante del DRD (inspector o coordinador del proyecto) y con el encargado (a) del lugar, el horario más adecuado para realizar los siguientes trabajos:

1. Acarreo y disposición de escombros generados por las actividades de demolición selectiva o remoción de unidades y equipos.

2. Se recuerda que el Contratista será responsable de mantener todas las áreas de trabajo limpias, durante y después de cada día laborable, y será responsable de llevar a cabo todos los trabajos incluidos en contrato, en estrecha coordinación con el representante designado para este proyecto (inspector o supervisor del proyecto), de forma tal que las obras no interrumpan o interfieran con las labores de los otros locales y las actividades que se llevan a cabo en estas instalaciones. De ser necesario realizar cualquier trabajo incluido en contrato, fuera de horas laborables, en días feriados o en fines de semana, el mismo deberá estar coordinado y autorizado (por escrito) por los funcionarios antes mencionados.

q. El Departamento de Recreación y Deportes (DRD) NO le requerirá al Contratista la instalación de una oficina de inspección (*Inspection Office*) para el proyecto de referencia.

II. DISPOSICIONES TÉCNICAS:

a. El Contratista proveerá e instalará toda la conexión razonable a los equipos eléctricos y mecánicos que se incluyan como parte de este contrato, aunque dicha conexión no esté ilustrada en planos. De haber una omisión o discrepancia en las especificaciones o planos, el Contratista será responsable de proveer e instalar el sistema mínimo requerido para que el equipo quede en servicio y la facilidad pueda operar funcionalmente, sin costo adicional al DRD y sin que se afecte la garantía de los equipos antes mencionados. La solución que provea el Contratista cumplirá con todos los códigos y reglamentos aplicables y será aprobada por el DRD.

Ejemplo de Rótulo de Proyecto

Rótulo tamaño 192"x96"





Ejemplo área blanca (reservada) para logos. De tenerlos colocarlos de abajo para arriba.



ON KEY LLC

BRENDALY QUINONES
PROFESSIONAL ENGINEER
EMAIL: INFO@ONKEYLLC.US
PHONE: 787 -379-0556

IMPORTANT NOTICE:

ALL DESIGNS, DRAWINGS AND COPIES ISSUED BY B. QUINONES, ARE PROPERTY OF B. QUINONES, AND CANNOT BE REPRODUCED OR EXHIBITED IN ANY MANNER OR PLACE EXCEPT FOR THE PURPOSE OF ITS DESIGN INTENT OR BY WRITTEN CONSENT OF B. QUINONES. IF FOR ANY REASON, PART OR ALL OF THE B. QUINONES DESIGN IS ISSUED OR BUILT WITHOUT B.QUINONES CONSENT, THE PARTIES INVOLVED SHALL PAY B. QUINONES FEE IN FULL.

Project Name and Address:
Urb. El Rosario
Facility Repair
Calle 3
Vega Baja, Puerto Rico

Client Name and Address:
DEPARTAMENTO DE RECREACION Y DEPORTES DE PR
PO Box 9023207 San Juan
PR 00902-3207
Tel. (787) 721-2800 Fax: (787) 268-1845
www.drd.pr.gov

Design by: B. QUINONES

No.	Revision/Issue	Plot Date:

Brendaly Quiñones Villodas
Ingeniero
Licenciado
Lic. 17715 PE
Puerto Rico
Fecha de Expiración: 2024-06-10

HARD COPY
SIGNATURE AND SEAL
ENG. BRENDALY QUINONES Lic. # 17715

DRD
DEPARTAMENTO DE RECREACIÓN Y DEPORTES

PO Box 9023207
San Juan PR
00902-3207

In this Page:

PROPOSED SIGN AND NOTES

Scale: NOT TO SCALE
Details scale: AS NOTED

Job #: 2023-000502
Date: MAY 30, 2023
Check by: AUG 19, 2024
Sheet No.
A-03

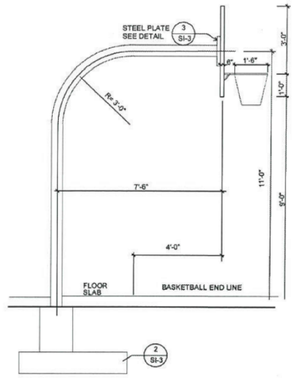

BLACKBOARD DETAIL

SCALE: 3/8" = 1'-0"

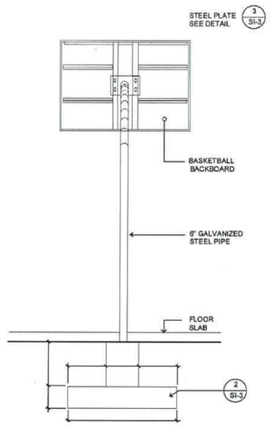

REAR ELEVATION

SCALE: 3/8" = 1'-0"

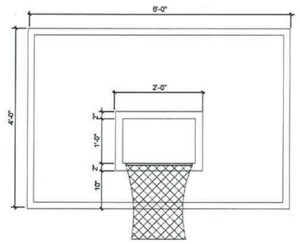

BLACKBOARD (FRONT VIEW)

SCALE: 3/4" = 1'-0"

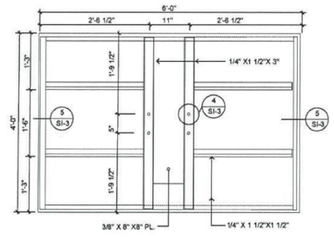

BLACKBOARD (REAR VIEW)

SCALE: 3/4" = 1'-0"

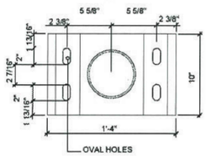

DETAIL 3 SI-3

SCALE: 1-1/2" = 1'-0"

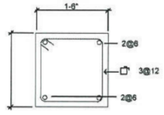

SECTION X SI-3

SCALE: 1-1/2" = 1'-0"

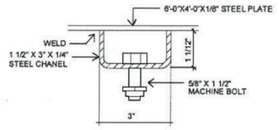

DETAIL 4 SI-3

N.T.S.

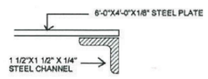

DETAIL 5 SI-3

N.T.S.

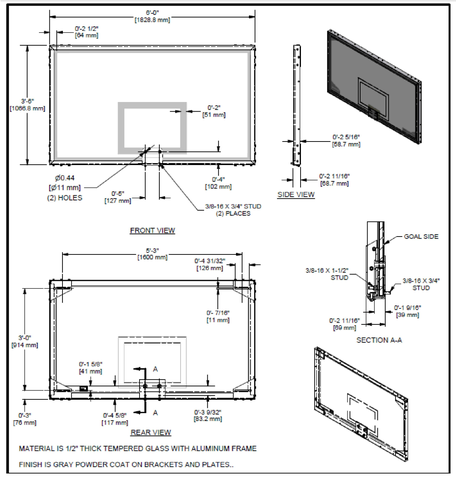

MATERIAL IS 1/2" THICK TEMPERED GLASS WITH ALUMINUM FRAME

FINISH IS GRAY POWDER COAT ON BRACKETS AND PLATES..

Use Schd. 40 Steel Pipe

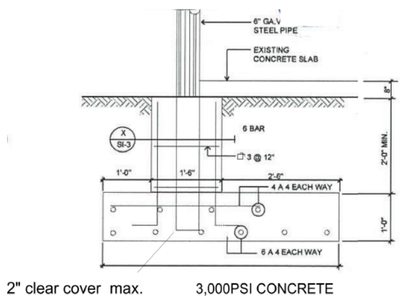

2" clear cover max. 3,000PSI CONCRETE

BLACKBOARD DETAIL 2 SI-3

SCALE: 3/8" = 1'-0"

PSS PERFORMANCE SPORTS SYSTEMS

EQUAL OR SIMILAR

GARED

MODEL AFRG42

ALUMINUM FRAME 72" X 42" RECTANGULAR GLASS BACKBOARD

The AFRG42 backboard shall be fabricated with an aluminum frame constructed of 0.200" thick extruded "E" channel with steel corner brackets. All steel components shall be powder coated with a durable gray finish. Aluminum-capped frame will not be acceptable. Manufacturer of backboard shall have over ten years of experience. Backboard shall meet NCAA and high school requirements.

Glass shall be ½" in thickness and fully tempered with white border and target lines permanently fused onto the surface. 12mm glass will not be considered equal to ½" glass, with a nominal thickness range of .485" to .515", and will not be used as a substitute for full ½" glass. Vinyl shock absorbing material insulates the glass from the frame. Goal mounting holes shall be on standard 5" horizontal and 4" vertical centers. Acrylic cushioning pad shall be used between steel mounting plate and glass to protect against possible breakage.

ACCESSORIES

GOALS

See Goal-Board Matrix specification sheet for goal compatibility.

NEW BASKETBALL GOAL

NOT TO SCALE

ON KEY LLC

IMPORTANT NOTICE:

ALL DESIGNS, DRAWINGS AND COPIES ISSUED BY B. QUINONES, ARE PROPERTY OF B. QUINONES, AND CANNOT BE REPRODUCED OR EXHIBITED IN ANY MANNER OR PLACE EXCEPT FOR THE PURPOSE OF ITS DESIGN INTENT OR BY WRITTEN CONSENT OF B. QUINONES. IF FOR ANY REASON, PART OR ALL OF THE B. QUINONES DESIGN IS ISSUED OR BUILT WITHOUT B.QUINONES CONSENT, THE PARTIES INVOLVED SHALL PAY B. QUINONES FEE IN FULL.

Project Name and Address:
Urb. El Rosario
Facility Repair
Calle 3
Vega Baja, Puerto Rico

Client Name and Address:
DEPARTAMENTO DE RECREACION Y DEPORTES DE PR
PO Box 9023207 San Juan
Tel. (787) 721 2900 Fax: (787) 268-1545
www.drd.pr.gov

Design by: B. QUINONES

No.	Revision/Issue	Plot Date:

Brendaly Quiñones Villodas
Ingeniero Licenciado
Lic. 17715 PE
Puerto Rico
Fecha de Expiración: 2024-06-10
HARD COPY SIGNATURE AND SEAL
ENG. BRENDALY QUIÑONES Lic. # 17715

DRD
DEPARTAMENTO DE RECREACIÓN Y DEPORTES
PO Box 9023207
San Juan PR
00902-3207

In this Page:

BASKETBALL GOAL DETAILS

Scale: NOT TO SCALE

Details scale: AS NOTED

Job #: 2023-000502

Date: MAR 11 2024

Check by: AUG 19, 2024

Sheet No.

A-04

SUBASTA 24 J – 08762R1- Parque El Rosario – Vega Baja, Puerto Rico

Lighting Requirements - LED Light Source

EQUAL OR SIMILAR

PART 1 – GENERAL

1.1 SUMMARY

A. Work covered by this section of the specifications shall conform to the contract documents, engineering plans as well as state and local codes.

B. The purpose of these specifications is to define the lighting system performance and design standards for Parque Urb. El Rosario using an LED Lighting source. The manufacturer / contractor shall supply lighting equipment to meet or exceed the standards set forth in these specifications. While these bid documents generally provide guidance as to quantity of luminaires needed to achieve the lighting requirements below, note that different manufacturers may require a different quantity of luminaires to meet below requirements. The contractor must provide equipment that meets the light level requirements shown in 1.2A.

C. The sports lighting will be for the following venues:

1. Baseball Field
2. Combined Area:
   (a) Basketball Court
   (b) Volleyball Court
   (c) Racquetball Court
   (d) Walking Path
3. Small League Baseball Field

D. The primary goals of this sports lighting project are:

1. Provide 9 new galvanized steel poles and pre-cast foundations total for all fields.
   i. Baseball Field
      1. 6 new 60’ poles / bases
   ii. Combined Area:
      1. 1 new 50’ pole/ base
   iii. Small League Baseball Field
      1. 2 new 60’ poles/bases
      2. Note that these poles should be planted inside bleacher area to avoid shadow.

2. Guaranteed Light Levels: Selection of appropriate light levels impact the safety of the players and the enjoyment of spectators. Therefore light levels are guaranteed to not drop below specified target values for a period of 10 years.

3. Control and Monitoring – **Shown as Alternative** – To allow for optimized use of labor resources and avoid unneeded operation of the facility, customer requires a remote on/off control system for the lighting system. Fields should be proactively monitored to detect luminaire outages over a 10-year life cycle. All communication and monitoring costs for 10-year period shall be included in the bid.

1.2 ONFIELD LIGHTING PERFORMANCE

A. Illumination Levels and Design Factors: Playing surfaces shall be lit to an average target illumination level and uniformity as specified in the chart below.

Area of Lighting	Average Target Illumination Levels	Maximum to Minimum Uniformity Ratio	Grid Points	Grid Spacing

Baseball Field	30-20 footcandles (infield-outfield)	2.5:1 – 3:1 (infield-outfield)	25-82	20’ x 20’
Basketball Court	10 footcandles	4:1	32	10’ x 10’
Volleyball Court	10 footcandles	4:1	18	10’ x 10’
Handball	10 footcandles	4:1	8	10’ x 10’
Tball	20 footcandles	3:1	TBD	20’ x 20’
Walking Path	.25 footcandles minimum	NA	NA	NA

B. Contractor may have to trim or eliminate trees to avoid blockage.

C. Color Temperature: The lighting system shall have a minimum color temperature of 5700K and a CRI of 75.

PART 2 – PRODUCT

2.1 SPORTS LIGHTING SYSTEM CONSTRUCTION

A. Manufacturing Requirements: All components shall be designed and manufactured as a system. All luminaires, wire harnesses, drivers and other enclosures shall be factory assembled, aimed, wired and tested.

B. Durability: All exposed components shall be constructed of corrosion resistant material and/or coated to help prevent corrosion. All exposed carbon steel shall be hot dip galvanized per ASTM A123. All exposed aluminum shall be powder coated with high performance polyester or anodized. All exterior reflective inserts shall be anodized, coated, and protected from direct environmental exposure to prevent reflective degradation or corrosion. All exposed hardware and fasteners shall be stainless steel, passivated and coated with aluminum-based thermosetting epoxy resin for protection against corrosion and stress corrosion cracking. Structural fasteners may be carbon steel and galvanized meeting ASTM A153 and ISO/EN 1461 (for hot dipped galvanizing), or ASTM B695 (for mechanical galvanizing). All wiring shall be enclosed within the cross-arms, pole, or electrical components enclosure.

C. System Description: Lighting system shall consist of the following:

1. Galvanized steel poles and cross-arm assembly.
2. Non-approved pole technology:
    a. Square static cast concrete poles will not be accepted.
    b. Direct bury steel poles which utilize the extended portion of the steel shaft for their foundation will not be accepted due to potential for internal and external corrosive reaction to the soils and long term performance concerns.
3. Lighting systems shall use concrete foundations. See Section 2.4 for details.
    a. For a foundation using a pre-stressed concrete base embedded in concrete backfill the concrete shall be air-entrained and have a minimum compressive design strength at 28 days of 3,000 PSI. 3,000 PSI concrete specified for early pole erection, actual required minimum allowable concrete strength is 1,000 PSI. All piers and concrete backfill must bear on and against firm undisturbed soil.
4. Manufacturer will supply all drivers and supporting electrical equipment
    a. Remote drivers and supporting electrical equipment shall be mounted approximately 10 feet above grade in aluminum enclosures. The enclosures shall be touch-safe and include drivers and fusing with indicator lights on fuses to notify when a fuse is to be replaced for each luminaire. Disconnect per circuit for each pole structure will be located in the enclosure. Integral drivers are not allowed.

b. Manufacturer shall provide surge protection at the pole equal to or greater than 40 kA for each line to ground (Common Mode) as recommended by IEEE C62.41.2_2002.

5. Wire harness complete with an abrasion protection sleeve, strain relief and plug-in connections for fast, trouble-free installation.

6. All luminaires, visors, and cross-arm assemblies shall withstand 150 mi/h winds and maintain luminaire aiming alignment.

7. Control cabinet to provide remote on-off control, monitoring, and entertainment features of the lighting system. See Section 2.3 for further details.

8. Contactor cabinet to provide on-off control.

9. Enhanced corrosion protection package: Due to the potentially corrosive environment for this project, manufacturers must provide documentation that their products meet the following enhanced requirements in addition to the standard durability protection specified above:

    a) Exposed carbon steel horizontal surfaces on the crossarm assembly shall be galvanized to no less than a five (5) mil average thickness.

    b) Exposed die cast aluminum components shall be Type II anodized per MIL-STD-8625 and coated with high performance polyester.

    c) Exposed extruded aluminum components shall be Type II anodized per MIL-STD-8625 and coated with high performance polyester.

D. Safety: All system components shall be UL listed for the appropriate application.

2.3 REMOTE CONTROL SYSTEM

A. Instant On/Off Capabilities: System shall provide for instant on/off of luminaires.

B. Lighting contactor cabinet(s) constructed of NEMA Type 4 aluminum, designed for easy installation with contactors, labeled to match field diagrams and electrical design. Manual off-on-auto selector switches shall be provided.

C. Contactor control of lights: To minimize wear on drivers and other electrical components and prevent lights from turning on due to communication loss, circuits must be controlled via contactor switching, not dimming driver output to zero.

D. Remote Lighting Control System: System shall allow owner and users with a security code to schedule on/off system operation via a web site, phone, or email up to ten years in advance.

The owner may assign various security levels to schedulers by function and/or fields. This function must be flexible to allow a range of privileges such as full scheduling capabilities for all fields to only having permission to execute “early off” commands by phone. Scheduling tool shall be capable of setting curfew limits.

Controller shall accept and store 7-day schedules, be protected against memory loss during power outages, and shall reboot once power is regained and execute any commands that would have occurred during outage.

E. Remote Monitoring System: System shall monitor lighting performance and notify manufacturer if individual luminaire outage is detected so that appropriate maintenance can be scheduled. The controller shall determine switch position (manual or auto) and contactor status (open or closed).

F. Communication Costs: Manufacturer shall include communication costs for operating the control and monitoring system for a period of 10 years.

2.4 STRUCTURAL PARAMETERS

A. Wind Loads: Wind loads shall be based on the 2018 International Building Code. Wind loads to be calculated using ASCE 7-16, an ultimate design wind speed of 158mph and exposure

category C as validated by ATC Hazard Council (https://hazards.atcouncil.org/#/wind?lat=18.4354568&lng=-66.3944303&address=Parque%20Urb.%20El%20rosario%2C%20vega%20baja%2C%20puerto%20rico)

B. Pole Structural Design: The stress analysis and safety factor of the poles shall conform to 2013 AASHTO Standard Specification for Structural Supports for Highway Signs, Luminaires, and Traffic Signals (LTS-6).

C. Foundation Design: The foundation design shall be based on soil parameters as outlined in the geotechnical report. If no geotechnical report is available, the foundation design shall be based on soils that meet or exceed those of a Class 5 material as defined by 2018 IBC Table 1806.2.

PART 3 – EXECUTION

3.1 FIELD QUALITY CONTROL

A. Illumination Measurements: Upon substantial completion of the project and in the presence of the Contractor, Project Engineer, Owner's Representative, and Manufacturer's Representative, illumination measurements shall be taken and verified. The illumination measurements shall be conducted in accordance with IESNA RP-6-22.

B. Field Light Level Accountability

1. Light levels are guaranteed not to fall below the target maintained light levels for the entire warranty period of 10 years. These levels will be specifically stated as “guaranteed” on the illumination summary provided by the manufacturer.

3.4 WARRANTY AND GUARANTEE

A. 10-Year Warranty: Each manufacturer shall supply a signed warranty covering the entire system for 10 years from the date of shipment. Warranty shall guarantee specified light levels. Manufacturer shall maintain specifically funded financial reserves to assure fulfillment of the warranty for the full term. Warranty does not cover weather conditions events such as lightning or hail damage, improper installation, vandalism or abuse, unauthorized repairs or alterations, or product made by other manufacturers.

B. Maintenance: Manufacturer shall monitor the performance of the lighting system, including on/off status, hours of usage and luminaire outage for 10 years from the date of equipment shipment. Parts and labor shall be covered such that individual luminaire outages will be repaired when the usage of any field is materially impacted. Manufacturer is responsible for removal and replacement of failed luminaires, including all parts, labor, shipping, and equipment rental associated with maintenance. Owner agrees to check fuses in the event of a luminaire outage.

PART 4 – DESIGN APPROVAL

B. Approved Product: Musco’s Light Structure System™ with TLC for LED® is the approved product. https://findmyrep.musco.cloud/representatives?team=Sales&country=Puerto+Rico&type=Dependency&postal=PR

Light·Structure System™

5 Easy Pieces™

Complete System from Foundation to Poletop



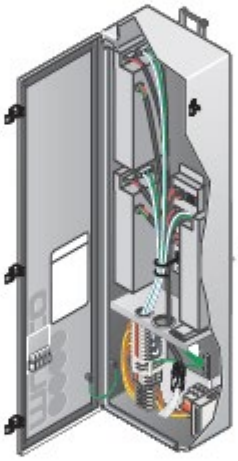



All components designed to work together . . .
factory built, wired, aimed, and tested
to assure reliable, trouble-free operation.

Covered by a 10-year product assurance and warranty programme with guaranteed light levels including parts and labour for maintenance, system monitoring, and 24/7 support from our Control-Link Central™ service center.

For your
BUDGET,
for the
ENVIRONMENT.

www.musco.com
lightlog@musco.com

musco Lighting
We Make It Happen.

Installation Instructions: **Control-Link® Control System with Contactors**

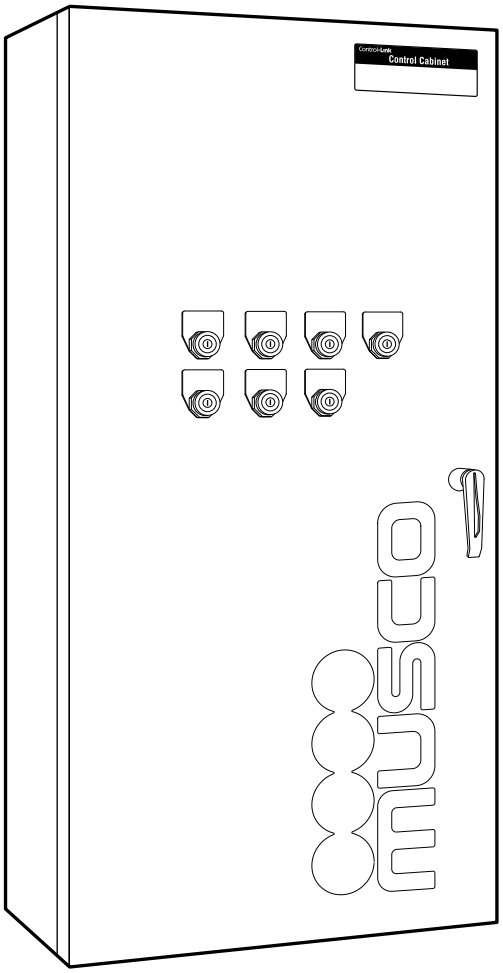

We Make It Happen®

©2012, 2015 Musco Sports Lighting, LLC · M-1464-en04-3

Contents

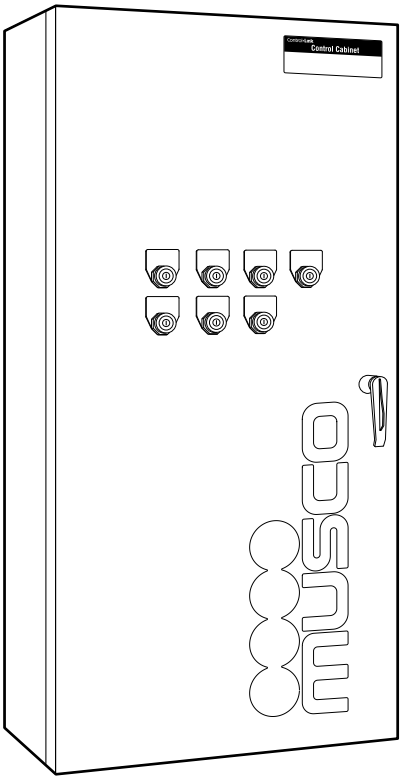

Before You Begin 3
- Safety Information 3
- About These Instructions 3
- Electrical System Requirements 4
- Cabinet Dimensions 5
- Component Matching and Labeling 5

Installation Procedure 7

©2012, 2015 Musco Sports Lighting, LLC · M-1464-en04-3

Before You Begin

Safety Information

Electrical Safety Guidelines

Use extreme caution near overhead power lines or underground utilities. Observe all safety precautions for high-voltage equipment. Only qualified personnel may perform wiring. Follow all applicable building and electrical codes.

General Safety Guidelines

Follow proper safety procedures during installation. Installers must wear appropriate personal protective equipment, including eye protection.

Locate all underground utilities before digging.

All tools and equipment Musco supplies are designed for a specific use as described in these instructions. Do not use them in any other manner. Do not alter structural members in any way, such as bending, welding, or drilling, without prior authorization from Musco.

About These Instructions

These instructions detail basic installation procedures for the Control-Link® control system with contactors. They are not a comprehensive guide to all possible situations. Direct any questions to Musco at +1-800-825-6020 or call your local representative.

Throughout this manual, note these important symbols:



The safety alert symbol alerts you of situations that require care and caution to avoid serious personal injury.



The stop and check symbol signals you to stop and verify conditions before proceeding.



The contact Musco symbol appears in special situations where you may need to call Musco for further information.



The go-to arrow tells you where to find further instructions for special situations or optional features.



The tip symbol points out advice that makes installation easier.



The recycle symbol identifies recyclable materials.

©2012, 2015 Musco Sports Lighting, LLC · M-1464-en04-3

Before You Begin

Electrical System Requirements

Only a qualified electrician may perform electrical work. Follow all applicable code requirements. Ensure your electrician reviews the following information before beginning installation.

- Ensure supply wiring is rated for 90 °C.
- Size circuit breakers for full load amperage draw of each circuit. Refer to cabinet interior door label for short circuit current rating information.
- A transformer may be required to supply control power. See *Control Power Consumption* table in *Control System Summary*.
- The control system requires power at all times for manual lighting control, scheduling, and communication with Musco's Control-Link Central™ service center. Only switch off power for maintenance. Supply a breaker lock-on device.

Control System Summary

Musco supplies a *Control System Summary* for every project. This document is necessary for system design and pre-installation planning. It contains project-specific details you need for installation. Here are the contents:


Control System Summary

Project Information

Project Specific Notes:

Equipment Listing

Materials Checklist

- Project information
  - Project details
  - Contact information
  - References to documents such as lighting design scan
  - Voltage, frequency, and phase
  - Control voltage
- Materials checklist
  - A quick reference of everything you supply for the project
- Equipment listing
  - Cabinets
  - Contactors and sizes
  - Switches
- Important installation notes
- Control system diagram
  - Cabinet layout
  - Wire runs and conduit details
- Switching schedule
  - Fields and lighting zones
- Control power consumption
  - Control voltage and phase requirements
  - Volt-amp loading of control system
- Circuit summary by zone
  - Switching zone details (pole, number of luminaires, field, contactor ID, zone)
  - Full load current draw for each circuit
- Panel summary
  - Panel layout by circuit
  - Service Control module location for each circuit/ contactor
- Zone schedule
  - Field/circuit grouping by zone/selector switch

©2012, 2015 Musco Sports Lighting, LLC · M-1464-en04-3

Before You Begin

Cabinet Dimensions

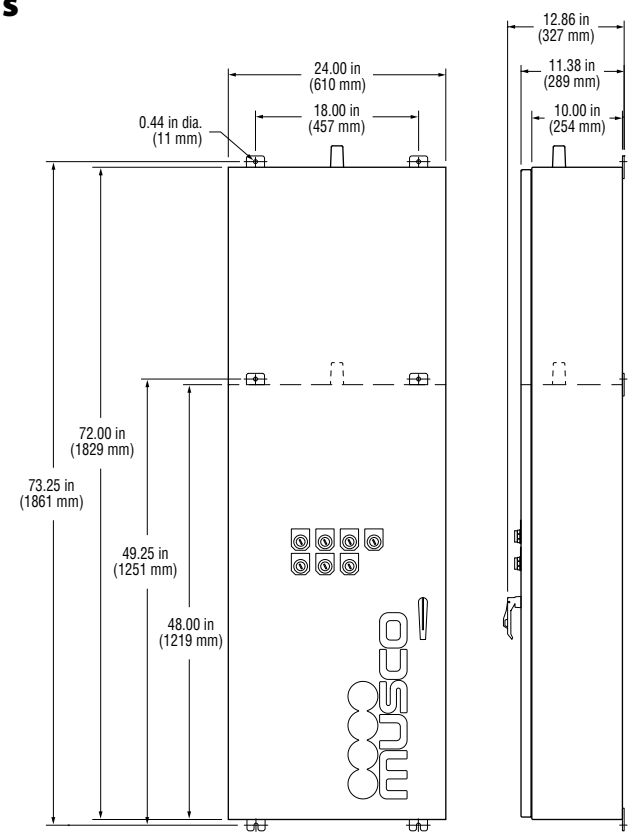

Control cabinet
48 in (1219 mm) or 72 in (1829 mm)

Notes:
- Manual switches shown may differ on your equipment
- Shorter cabinet defined by dashed outline

Component Matching and Labeling

Musco labels all equipment to make installation easy. Components, cabinets, wiring, and connectors are all clearly marked with location, function, or any information needed for proper installation.

Electrical Components Labeling

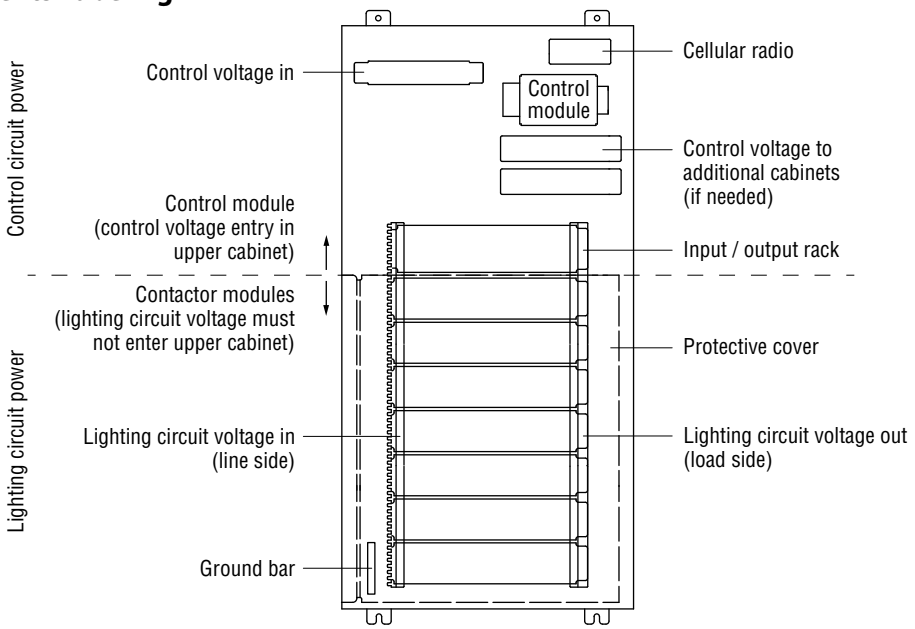

Control cabinet
48 in (1219 mm) shown

©2012, 2015 Musco Sports Lighting, LLC · M-1464-en04-3

Before You Begin

Wire and Connector Labeling

All cabinets are factory wired. Musco provides plug-in connectors to run harnesses between cabinets. The connectors are clearly labeled for easy installation.

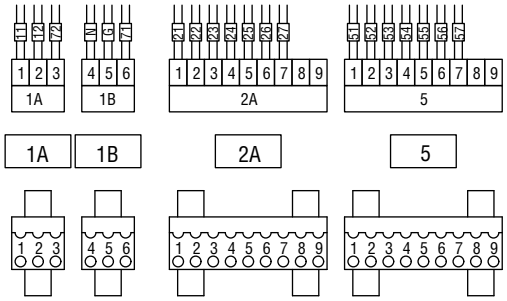

Location Stenciling

Each enclosure is custom fabricated for a specific location in your facility. To ensure installation at the correct location, we stencil the top of each cabinet with the facility name and electrical service.

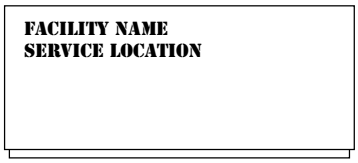

Top view of cabinet

Cabinet Labeling

A label in the upper right corner of the door identifies each cabinet. This label gives the control module ID and cabinet sequence. For example: 01-1 (first control module, first cabinet), 01-2 (first control module, second cabinet). See *Control System Summary* for a complete list of all supplied equipment.

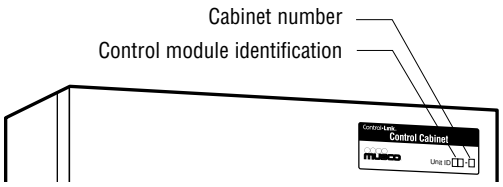

©2012, 2015 Musco Sports Lighting, LLC · M-1464-en04-3

Installation Procedure

Warning
Shock hazard

Disconnect power from distribution panel before opening. Take measures to ensure power remains disconnected until all installation steps are completed.

1 Mount cabinets in desired locations.

Note: If you are installing optional manual switches cabinet, you may locate it up to 300 ft away (75 m with 2.5 mm² wire) but not farther.

2 Cut entryways. Run conduit and wireway as needed for all cabinets.

Refer to *Control System Summary* for specific conduit runs needed in your project.

3 Install dedicated 20 amp circuit breaker in distribution panel to supply control circuit power. Install transformer if needed. See *Control System Summary* for information on breaker and transformer sizing.

4 Install lock-on device to control power circuit breaker. Apply provided label *Leave Breaker On Unless Performing Maintenance* to panel beside breaker.

5 Run control circuit power wires to control cabinet. Land on terminals provided (L1, N, G).

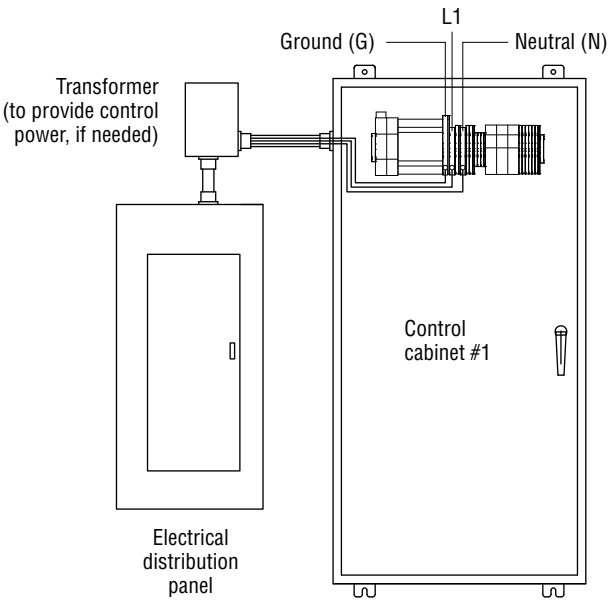

©2012, 2015 Musco Sports Lighting, LLC · M-1464-en04-3

Installation Procedure

If your project has only one control cabinet, skip to step 7.

6 Connect factory-supplied control harnesses as needed between cabinets. Route wires through conduit and plug connectors into matching sockets as labeled.

Note: Musco supplies control harnesses in standard lengths of 8 ft (2.4 m). If needed, disconnect and rebuild with longer wire: 12 AWG (2.5 mm²). The table gives wire and connector identification for reference.

Important: If combined length of all harnesses exceeds 30 ft (9 m), then subsequent cabinets need additional surge protection. Contact Musco for assistance.

Example: Cabinet 1 to 2 is 20 ft (6 m), cabinet 2 to 3 is 20 ft (6 m), total harness length is 40 ft (12 m). Cabinet 3 needs additional surge protection device.

Control Harnesses

Harness series	Wire #	Wire color	Function	Cabinet to cabinet
1A	11	Black	Control power to switches 1 – 4	Connector 1A, pos. 1
1A	12	Red	Control power to switches 5 – 8	Connector 1A, pos. 2
1A	72	Brown	Filtered control power	Connector 1A, pos. 3
1B	N	White	Neutral	Connector 1B, pos. 4
1B	G	Green	Ground	Connector 1B, pos. 5
1B	71	Blue/white	Filtered neutral	Connector 1B, pos. 6
2A	21-24 25-27	Black Red	Switched power to contactor coil	Connector 2A, pos. 1-7
5	51-57	Orange	Contactor status feedback	Connector 5, pos. 1-7

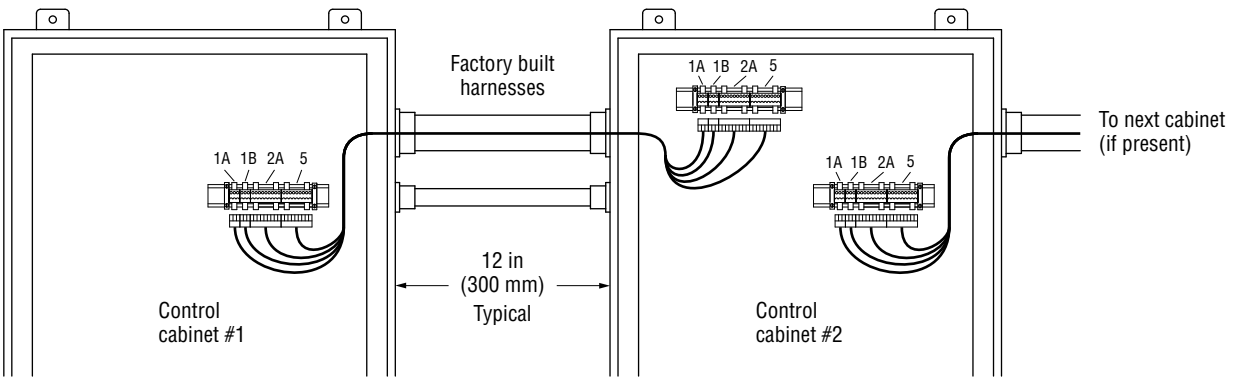

©2012, 2015 Musco Sports Lighting, LLC · M-1464-en04-3

Installation Procedure

7 Open protective cover over contactors using 8 mm hex key. Connect all control cabinets to system ground in distribution panel. Do not chain grounding conductors from cabinet to cabinet. See table *Ground Bar Wire Range and Torque* for torque requirements.

Note: Reliable operation of surge protection equipment requires home run of ground wires to minimize resistance from additional connections.

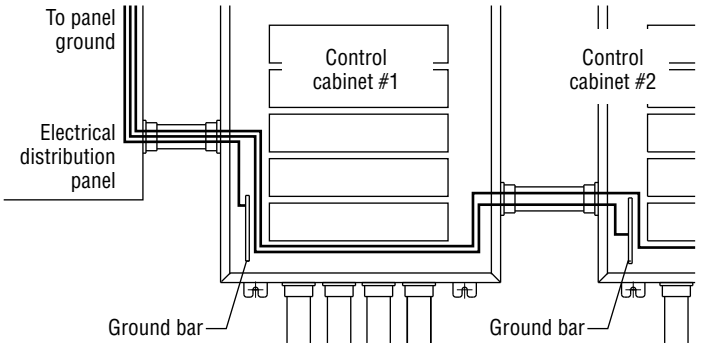

Ground Bar Wire Range and Torque

Wire range	Torque
6 – 4 AWG (16 mm²)	35 in·lb (4.0 N·m)
14 – 10 AWG (2.5 – 10 mm²) 2 wire	25 in·lb (2.8 N·m)
14 – 10 AWG (2.5 – 10 mm²) 1 wire	20 in·lb (2.3 N·m)

8 Connect lighting circuit equipment grounding conductors to ground bar in control cabinet. See table *Ground Bar Wire Range and Torque* for torque requirements.

9 Connect lighting circuits to load side of contactor modules. See table *Contactor Module Wire Range and Torque* for torque requirements.

10 Connect power from electrical distribution panel to lighting contactor modules. See table *Contactor Module Wire Range* and Torque for torque requirements. Close and secure protective cover.

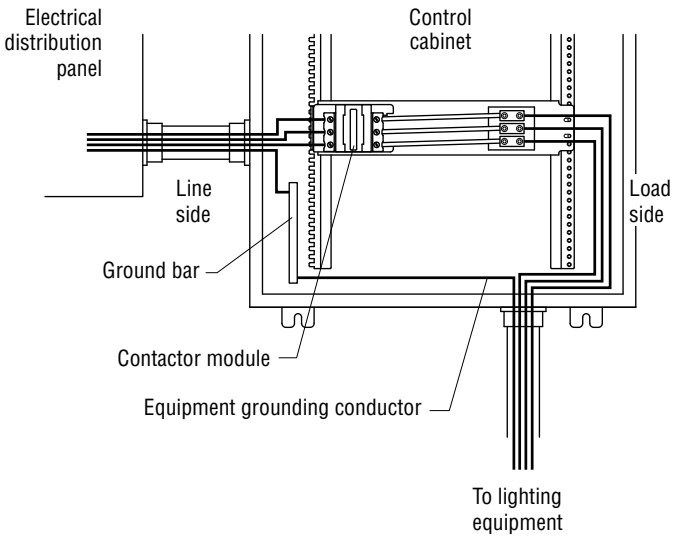

Contactor Module Wire Range and Torque

Contactor rating	Line side		Load side	
	Wire size range*	Torque	Wire size range**	Torque
30 amp [LC1D40]	10 – 3 AWG (6 – 25 mm²)	45 in·lb (5 N·m)	14 – 10 AWG (2.5 – 6 mm²)	35 in·lb (4 N·m)
			8 AWG (10 mm²)	40 in·lb (4.5 N·m)
			6 – 2/0 AWG (16 – 50 mm²)	120 in·lb (13.5 N·m)
60 amp [LC1D80]	10 – 2 AWG (6 – 25 mm²)	100 in·lb (11 N·m)	14 – 10 AWG (2.5 – 6 mm²)	35 in·lb (4 N·m)
			8 AWG (10 mm²)	40 in·lb (4.5 N·m)
			6 – 2/0 AWG (16 – 50 mm²)	120 in·lb (13.5 N·m)
100 amp [LC1D115]	14 – 2/0 AWG (2.5 – 50 mm²)	100 in·lb (11 N·m)	6 AWG – 350 MCM (16 – 150 mm²)	275 in·lb (31 N·m)
			6 AWG – 350 MCM (16 – 150 mm²) Neutral block only	375 in·lb (42 N·m)

* Stranded cable, single conductor, copper only.

** Stranded cable, single conductor, copper or aluminum.

©2012, 2015 Musco Sports Lighting, LLC · M-1464-en04-3

Installation Procedure

If your project includes optional manual switches cabinet, follow provided instructions for installation, then proceed to step 11.

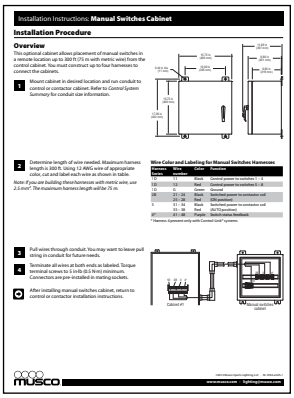

Installation Instructions: **Manual Switches Cabinet**

Installation Procedure

Overview

This optional cabinet allows placement of manual switches in a remote location up to 300 ft (75 m with metric wire) from the control cabinet. You must construct up to four harnesses to connect the cabinets.

1. Mount cabinet in desired location and run conduit to control or contactor cabinet. Refer to Control System Summary for conduit size information.

2. Determine length of wire needed. Maximum harness length is 300 ft. Using 12 AWG wire of appropriate color, cut and label each wire as shown in table.

Note: If you are building these harnesses with metric wire, use 2.5 mm². The maximum harness length will be 75 m.

Wire Color and Labeling for Manual Switches Harnesses

Harness	Wire No.	Color	Function
1	1	Black	Control power to switches 1 - 4
	1-2	Red	Control power to switches 5 - 8
1-2	2	Green	Ground
3	21 - 24	Red	Switched power to contactor coil
	21 - 28	Red	24V pushout
3	31 - 34	Black	Switched power to contactor coil
	31 - 38	Black	24V pushout
4*	41 - 48	Purple	Switch status feedback

** Harness: Expressed only with Connect Grid® systems*

3. Pull wires through conduit. You may want to leave pull string in conduit for future needs.

4. Terminate all wires at both ends as labeled. Torque terminal screws to 5 inch-lb (0.5 N-m) minimum. Connectors are pre-installed in mating sockets.

5. After installing manual switches cabinet, return to control or contactor installation instructions.

Cabinet #1

Manual switches cabinet

musco

www.musco.com · lighting@musco.com

11 After all circuits are completed, test entire lighting system.

- Turn off all manual switches.
- Turn on control system power.
- Turn on manual switches to test each circuit.
- Verify contactor pulls in and lights illuminate.

Call Musco Control-Link Central™ service center at +1-877-347-3319 two weeks prior to anticipated project completion to schedule commissioning time.

12 Commission the lighting system. Set all manual switches to auto position and call Musco Control-Link Central service center at the scheduled date and time.

Commissioning is the process required to bring the remote control system on-line. It takes approximately one to two hours. The electrical installer must be present for assistance and trouble-shooting. During this process, the service center operator:

- Establishes wireless communication
- Remotely switches each circuit and checks status
- Verifies with you each circuit is operating as expected

©2012, 2015 Musco Sports Lighting, LLC · M-1464-en04-3

Notes

©2012, 2015 Musco Sports Lighting, LLC · M-1464-en04-3



We Make It Happen.

www.musco.com

United States Patents: 7209958, 7778635, 9026104. [Pat_040B] Control-Link® is a registered trademark of Musco Corporation in the US. Control-Link Central™ is a trademark of Musco Corporation.

©2012, 2015 Musco Sports Lighting, LLC · M-1464-en04-3

Diode Light Source—LED

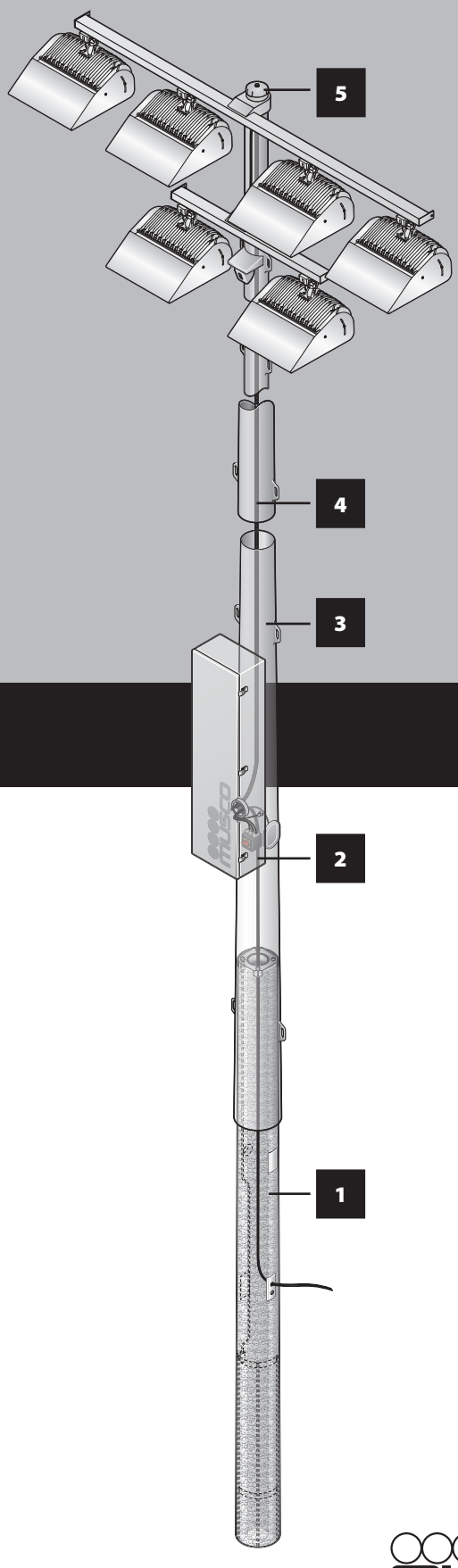

Installation Instructions: **Light-Structure Green™ Lighting System**

Fast, trouble-free installation with 5 Easy Pieces™ approach to system design

5 **Poletop Luminaire Assembly**

4 **Wire Harness**

3 **Galvanized Steel Pole**

2 **Electrical Components Enclosure**

1 **Precast Concrete Base**

We Make It Happen.

©2015 Musco Sports Lighting, LLC · LED ECE 9 · M-1917-en04-1

Table of Contents



Before You Begin
Safety Information 3
About These Instructions 3
Standard Tools/Supplies Checklist 4
Electrical System Requirements 5
Components Matching and Labeling 5
Documents We Provide 6
Unloading Instructions 7

Installation Procedure
Precast Concrete Base 8
Galvanized Steel Pole and Poletop Luminaire Assembly 11
Bolt-on Crossarms 13
Electrical Components Enclosure 16
Wire Harness 19
Luminaire Attachment 20
Pole Setting and Alignment 23
Connecting to Supply Wiring 28

Supplemental Instructions for Optional Features or Special Situations
Provided with your project as needed

Painted Pole Special Requirements ..... A
Separating Steel Pole Sections C-1
Separating Steel Pole from Concrete Base C-2
Auxiliary Bracket ..... D
Climbing Steps and Safety Cable ..... F
External Lightning Grounding ..... J

©2015 Musco Sports Lighting, LLC · LED ECE 9 · M-1917-en04-1

Before You Begin

Safety Information

Electrical Safety Guidelines

Use extreme caution near overhead power lines or underground utilities. Observe all safety precautions for high-voltage equipment. Only qualified personnel may perform wiring. Follow all applicable building and electrical codes.

General Safety Guidelines

Follow proper safety procedures during installation. Installers must wear the appropriate personal protective equipment including:

- Hard hat
- Steel-toed shoes
- Leather work gloves
- Eye protection

Locate all underground utilities prior to digging.

All tools and equipment supplied by Musco are designed for specific use as described in these instructions. Do not use them in any other manner. Do not alter structural members in any way, such as bend, weld, or drill, without prior authorization from Musco.

About These Instructions

These instructions give basic assembly procedures for the Light-Structure Green lighting system. They are not a comprehensive guide to all possible situations. Direct any questions to your local Musco representative.

Throughout this manual note these important symbols:



The safety alert symbol alerts you of situations that require care and caution to avoid serious personal injury.



The stop and check symbol signals you to stop and verify conditions before proceeding.



The contact Musco symbol appears in special situations where you may need to contact Musco for further information.



The go-to arrow indicates a branch in a procedure for special situations. In the case of optional equipment, the instructions may be in another document.



The tip symbol points out advice that makes installation easier.



The recycle symbol identifies recyclable materials.

©2015 Musco Sports Lighting, LLC · LED ECE 9 · M-1917-en04-1

Before You Begin

Standard Tools/Supplies Checklist

Refer to supplemental instructions provided for additional tools required.

Contractor/installer supplied tools	Function	Page
Hammer, pry-bar, banding cutters	Unloading equipment	7
Water pump	Removing water from base holes (as needed)	9
Two 1½ ton chain-type come-alongs	Jacking pole sections together	11, 27
Large Phillips-head screwdriver	Tightening captive screws to seal enclosure to pole hub	17
Standard screwdriver	Tightening distribution lugs, 45 A disconnect switch	28, 29
Torque wrench with 9⁄16 in socket	Tightening spreader bar hardware	15
Electrical fish tape, electrician's tape	Feeding wire harness through pole	19
Spray paint, chalk, or flags	Marking points to sight in aiming	23
Chalk or pencil	Making alignment marks	27
Black marker	Matchmarking structural fasteners for proper tightening	15
10 ft (3 m) stepladder or small line truck	Connecting supply wires to electrical enclosure	28, 29
Musco supplied tools	**Function**	**Page**
Wooden base wedges	Setting base	9
Level with shim for base taper	Plumbing base	9
Steel bar	Setting base, seating pole on base	9, 27
1 1⁄16 in socket, extension, breaker bar, and 1 1⁄16 in wrench	Tightening structural fasteners	14
5⁄32 in hex key	Attaching handhole covers on base and steel pole	8, 19, 28
9⁄16 in wrench	Tightening poletop set screw, pole cap fastener, enclosure hanger bolt, and spreader bar hardware	12, 15, 17
Dishwashing liquid (original Dawn® or DIAO™ brand)	Lubricating pole slip-fit connections	11, 23
Wooden shipping blocks	Elevating pole sections off ground during assembly	11
7⁄16 in ratcheting combination wrench	Tightening captive bolts to secure luminaire assembly	22
Pole rotator kit	Guiding pole onto base, pole alignment	23, 25, 26
Steel chain	Setting pole on base	27
5 mm hex key	Landing primary feed wires on 125 A disconnect switch	29
3⁄16 in hex key	Attaching grounding conductors inside electrical enclosure	28, 29
5⁄16 in hex key	Attaching grounding conductors inside pole at handhole	29
Machinery needed	**Function**	**Page**
Crane or forklift with nylon strapping and 8 ft (2.5 m) sling (sized to weight of base)	Unloading materials, setting bases	7, 9
Auger	Boring holes for bases	8
Load-rated crane, nylon slings, and shackles	Setting poles	24

Documents You Need

- ❑ Musco *Foundation And Pole Assembly drawings*
- ❑ *Field Aiming Diagram*
- ❑ Alternate foundation design (when present)
- ❑ *Control System Summary*

If you do not have all of these documents, contact your local Musco representative.

©2015 Musco Sports Lighting, LLC · LED ECE 9 · M-1917-en04-1

Before You Begin

Electrical System Requirements

While the majority of the Light-Structure Green lighting system can be assembled by non-professionals, a qualified electrician must handle the electrical supply installation and hook-up in accordance with national, state, and local codes. Your electrician should review this information before installation begins.

The electrician is generally required to provide these items:

- Service entrance
- Main power disconnect and distribution panel(s)
- Supply wiring and equipment grounding conductors

Ensure supply wiring is rated for 90 °C. Review the label inside the electrical components enclosure door and *Control System Summary* for voltage and phase requirements.

Always dispose of electronic waste in accordance with all applicable laws and regulations.

Other features that may affect the wiring supply requirements for this project include:

- Lighting contactor cabinets — refer to installation instructions provided with control equipment and the Musco *Control System Summary*.
- Control-Link™ system — refer to installation instructions provided with control equipment and the Musco *Control System Summary*.
- Auxiliary bracket option — customer supplies all wiring for auxiliary components.

Volunteer Installation

Have a qualified electrician review and complete the following:

- Create electrical system design — prior to installation.
- Provide and install trenching, supply wiring, and conduit.
- Complete all steps from *Connecting to Supply Wiring* section.
- Test complete lighting system.

Components Matching and Labeling

Pole locations are identified by a pole ID (A1, A2, B1, B2, etc.) on the *Field Aiming Diagram*. These IDs are also marked on the individual components:

- Poletop luminaire assemblies, bolt-on crossarms, and luminaire shipping cartons
- Wire harnesses
- Electrical components enclosures
- Galvanized steel pole sections
- Precast concrete bases

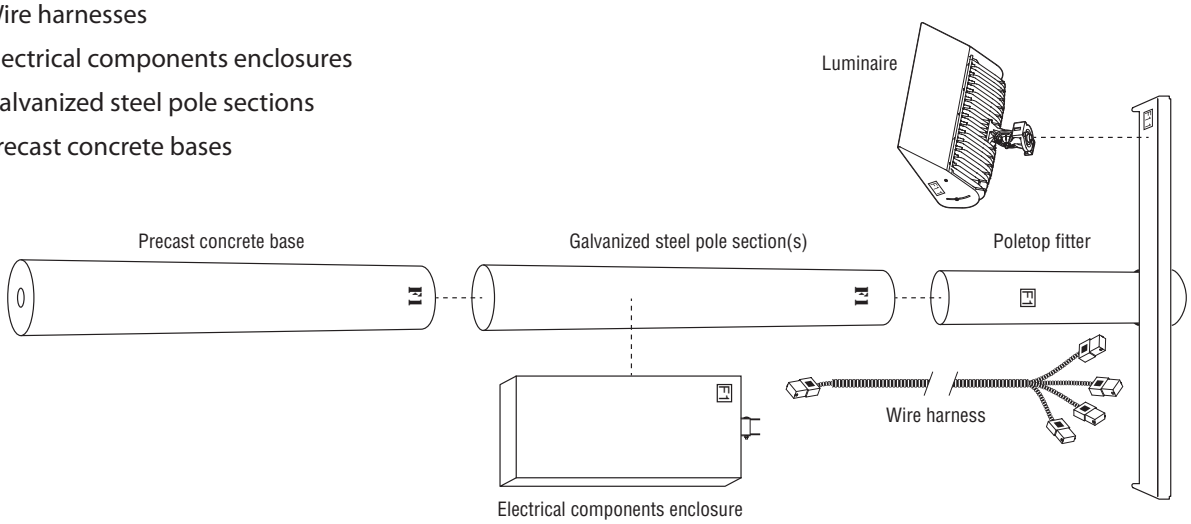

©2015 Musco Sports Lighting, LLC · LED ECE 9 · M-1917-en04-1

Before You Begin

Documents We Provide

Field Aiming Diagram

The *Field Aiming Diagram* is your map for locating all poles on your project. It gives this information:

- Pole IDs, locations, and heights
- Luminaire IDs
- Field origin for coordinate measuring
- Common aiming point for all poles, or individual aiming points for each pole
- Full load current for each luminaire

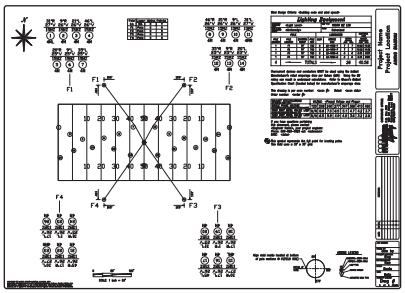

Control System Summary

Projects with a control system include a *Control System Summary*. It gives this information:

- Control system diagram and details
- Contactors and cabinets
- Lighting circuits
- Voltage, phase, and frequency information
- Full load current for each circuit



Musco Foundation and Pole Assembly Drawing

This drawing provides information related to the installation of the foundation and the galvanized steel pole.

- Pole weight
- Precast concrete base weight
- Hole depth and diameter
- Concrete backfill quantities
- Pole section minimum overlaps

Note: Foundation details are omitted on projects with alternate foundation designs.

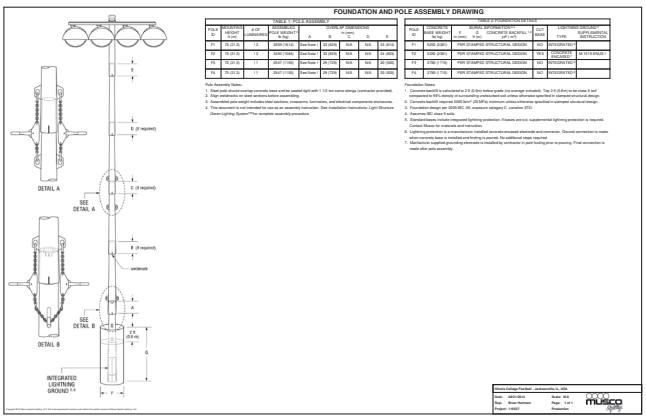

Alternate Foundation Design

Some poles on a project may require an alternate foundation design. This stamped drawing provides construction details of the alternative design. This document supersedes all other foundation information.

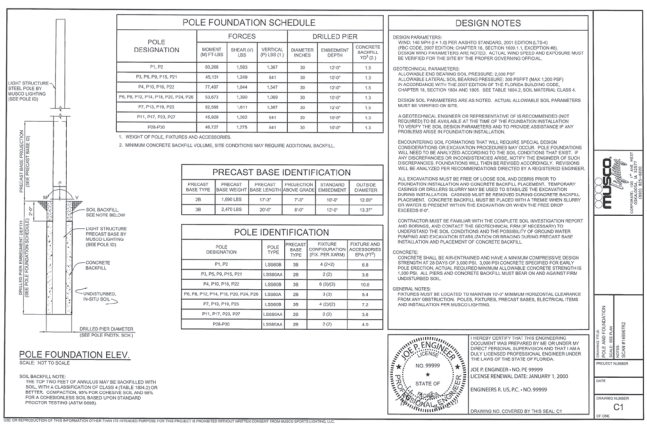

Before You Begin

Unloading Instructions

A typical shipment includes precast concrete bases, galvanized steel poles, electrical components enclosures, wire harnesses, and poletop luminaire assemblies with luminaires.

For ease of installation, set all matched components by the proper pole location as noted on the *Field Aiming Diagram*.

Tools/Materials Needed

- ❑ Crane with nylon web sling or forklift (load rated)
- ❑ Hammer
- ❑ Pry bar
- ❑ Banding cutters

Warning
Crushing hazard. Product is heavy and may roll.
Do not cut shipping bands or remove blocking from concrete bases or poles until they are supported by unloading equipment.

Use proper pick-up procedures conforming with local regulations when lifting concrete bases and poles. Balance point may not be at midpoint of base or pole.

- Check bill of lading to verify you have all materials.
- Inspect all materials for shipping damage.
- Store electrical components enclosures in a dry location or cover with tarp until ready to install.

Painted poles require special handling, see *Instructions: Painted Pole Special Requirements*.

If additional information is needed, contact your local Musco representative.

Save wooden shipping blocks to use during pole assembly.

Please recycle.
Luminaires, wire harnesses, and other components are shipped in recyclable cardboard packaging.









Precast Concrete Base

Overview

The precast concrete base is set directly into the ground, backfilled with concrete, and allowed to cure for 12 to 24 hours. The base is designed for easy slip-fit connection to the galvanized steel pole. The remaining components — steel pole, poletop luminaire assembly, electrical components enclosure, and wire harness —are assembled as a unit and set onto the base. The base includes an integrated lightning ground system.

Tools/Materials Needed

Musco Supplied

- ❑ *Field Aiming Diagram*
- ❑ Musco *Foundation and Pole Assembly Drawing* or alternate foundation design
- ❑ Steel bar
- ❑ Wooden base wedges
- ❑ Level with shim for tapered base
- ❑ 5⁄32 in hex key

Contractor Supplied

- ❑ Conduit for underground wiring
- ❑ Concrete backfill
- ❑ Water pump (as needed)

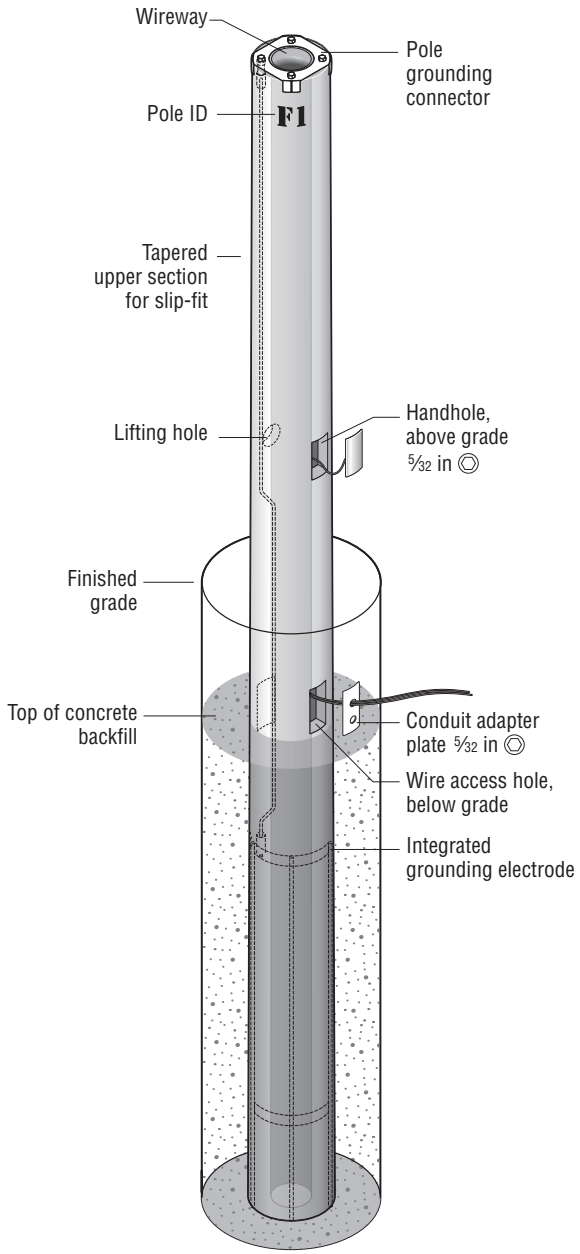

Installation Procedure

Verify pole ID on concrete base matches pole location on *Field Aiming Diagram*.

For options on poor soil conditions, alternative installation methods, or if there are any issues with pole locations given, contact your local Musco representative. Your project engineer's name appears on *Field Aiming Diagram*.

Note: Use only project-specific foundation designs as detailed on Musco Foundation and Pole Assembly Drawing or alternate foundation design plan.

1 Mark pole locations per *Field Aiming Diagram*.

2 Excavate holes to size and depth given on Musco *Foundation and Pole Assembly Drawing* or alternate foundation design.

Warning
Fall hazard
Cover holes or install fencing for fall safety.

©2015 Musco Sports Lighting, LLC · LED ECE 9 · M-1917-en04-1

Precast Concrete Base

3 Sling and lower base into hole. Orient wire access hole to accommodate incoming supply wiring. Snip banding and remove tab protectors.

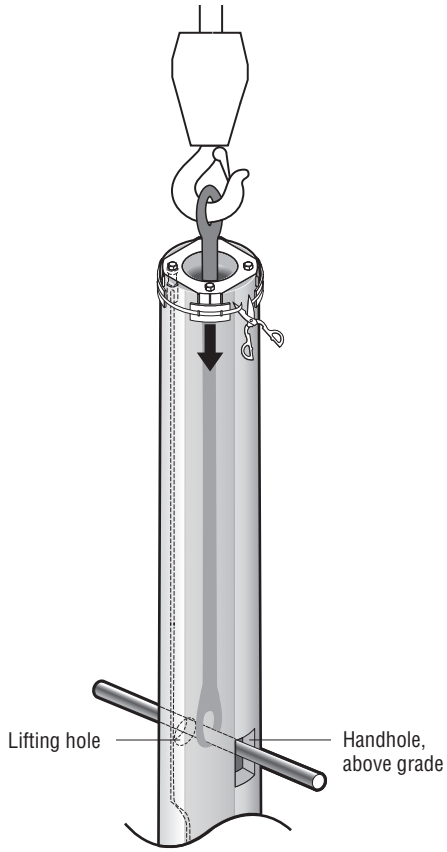

4 Plumb base and wedge into position. Use supplied level with shim on upper end against base. Shim accommodates taper of base. Top of base is beveled. Keep level at least 6 in (150 mm) from top when plumbing.

5 Remove any water from hole to avoid weakening foundation. Water in hole during concrete pour can also cause hollow center of base to fill with concrete.

If backfilling to finished grade with concrete instead of compacted fill, be sure to maintain wire access.

6 Backfill with concrete per Musco *Foundation and Pole Assembly Drawing* or alternate foundation design.

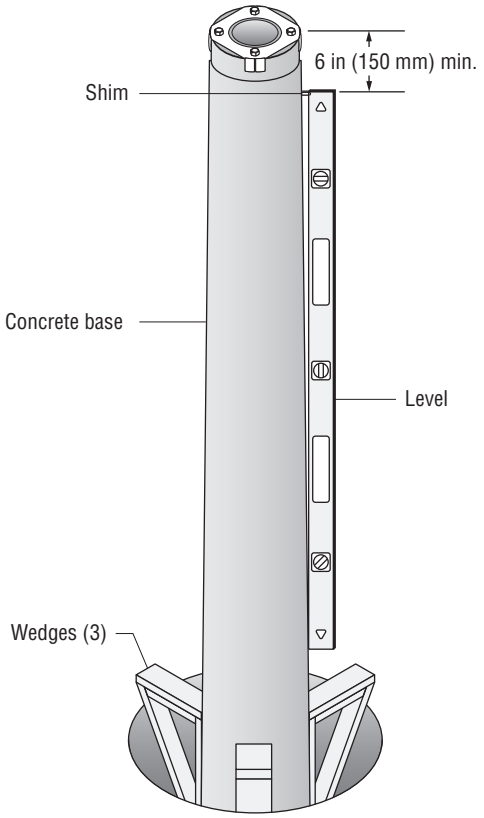

©2015 Musco Sports Lighting, LLC · LED ECE 9 · M-1917-en04-1

Precast Concrete Base

7 Have your electrician install all underground conduit and wiring, including equipment grounding conductor. Route wires up through base to handhole. Conduit adapter plates with knockouts are provided. You may also install wiring after standing pole.

8 Backfill with compacted soil to finished grade unless alternate foundation design requires concrete to finished grade.

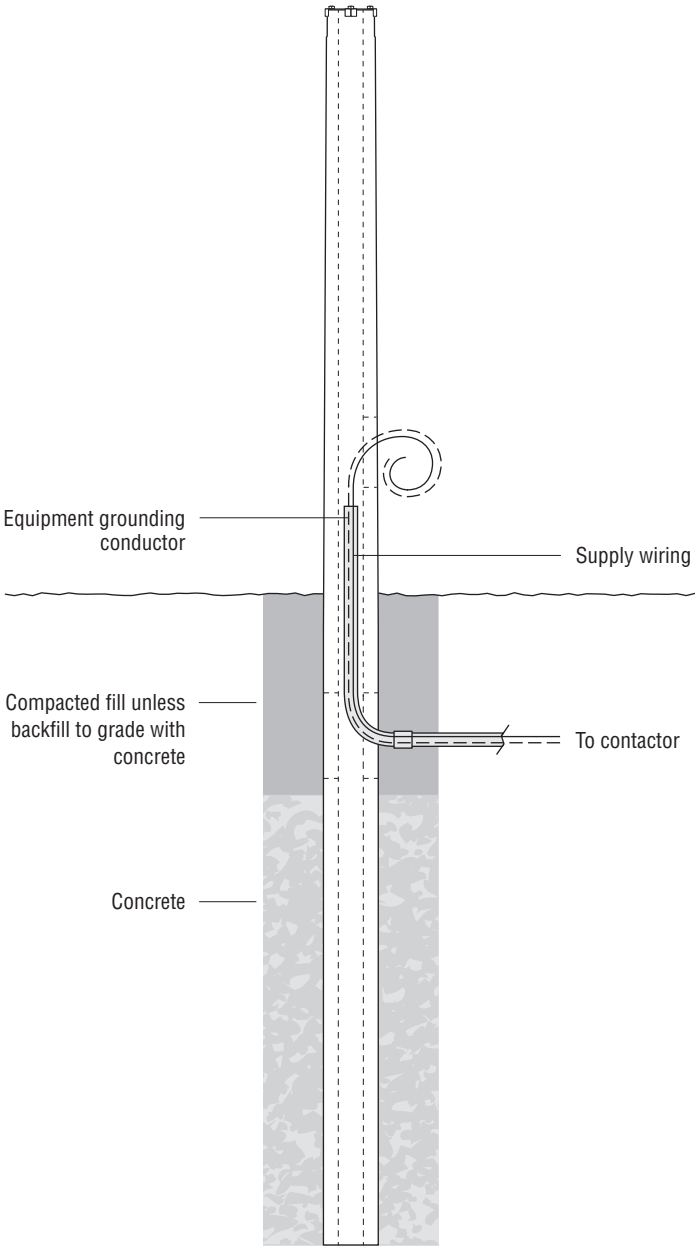

©2015 Musco Sports Lighting, LLC · LED ECE 9 · M-1917-en04-1

Galvanized Steel Pole and Poletop Luminaire Assembly

Overview

The galvanized steel pole and poletop luminaire assembly are designed to slip-fit together. Jacking ears on each pole section provide attachment points to pull pole sections together. The Musco *Foundation and Pole Assembly Drawing* gives minimum overlap specifications for each pole section.

Tools/Materials Needed

Musco Supplied
- ❑ Wooden shipping blocks
- ❑ Musco *Foundation and Pole Assembly Drawing*
- ❑ 9/16 in wrench
- ❑ Dishwashing liquid (original Dawn® or DIAO™ brand)

Contractor Supplied
- ❑ Two 1½ ton chain come-alongs

Assembly Procedure

Verify pole ID on each steel pole section matches pole location on *Field Aiming Diagram*. Pole ID is stenciled on inside bottom end and outside top end of each section.

1 Lay out all pole sections and poletop luminaire assembly in sequence. Ensure all weldmarks face same direction. Weldmarks represent field side of pole. Orient electrical components enclosure hub up.

Use shipping blocks as necessary to support pole sections during assembly.

2 Lubricate top of each steel pole section with supplied dishwashing liquid.

3 Align jacking ears. Using two 1½ ton come-alongs, pull sections together evenly until tight. Ensure minimum overlap per Musco *Foundation and Pole Assembly Drawing*. Repeat for all sections.

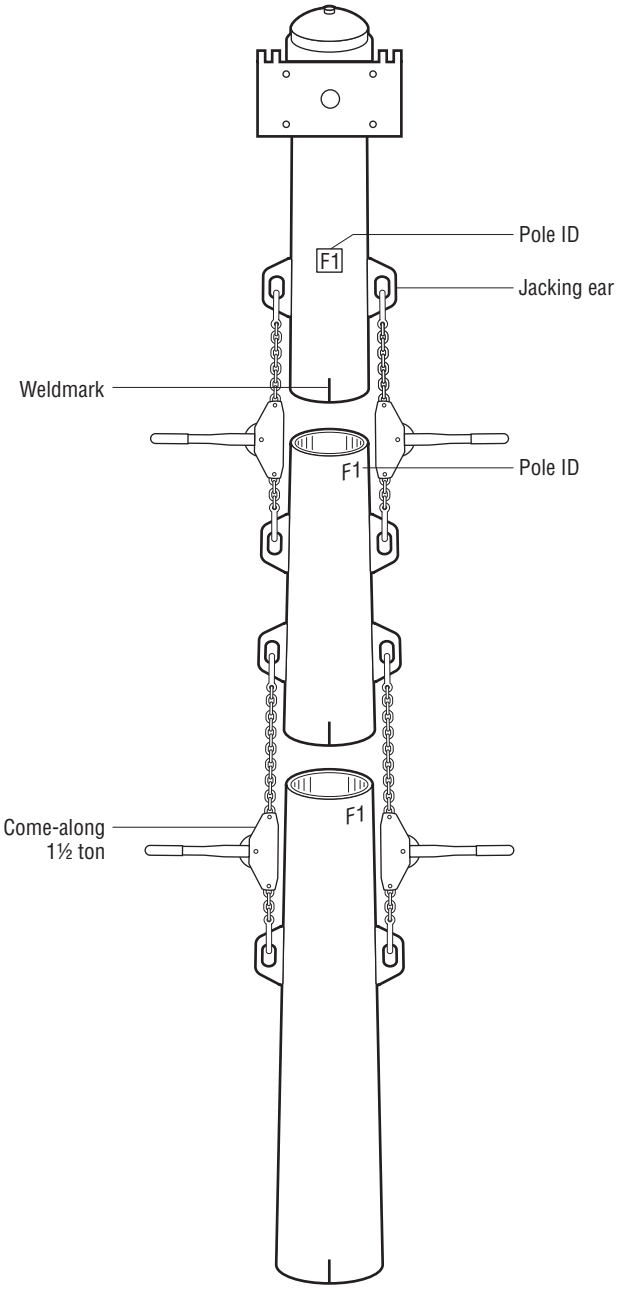

©2015 Musco Sports Lighting, LLC · LED ECE 9 · M-1917-en04-1

Galvanized Steel Pole and Poletop Luminaire Assembly

4 Tighten set screw using 9⁄16 in wrench.

5 Remove protective cover from pole alignment device.

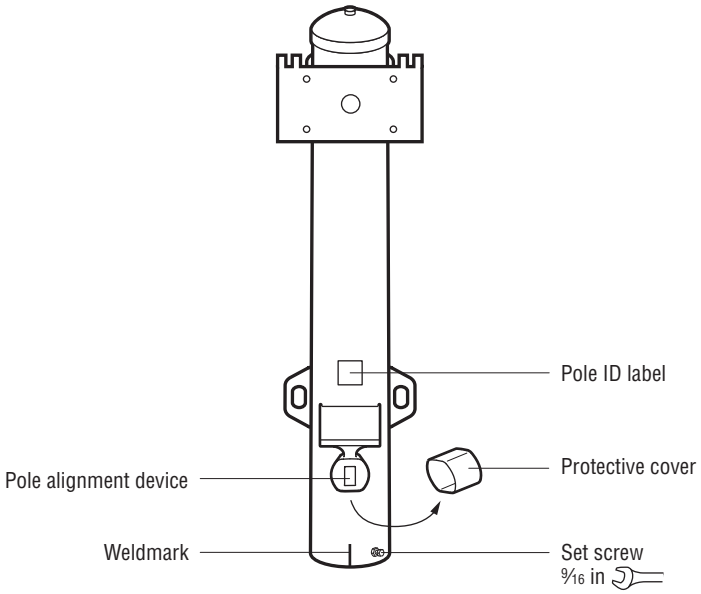

Bolt-on crossarm configuration

If pole has auxiliary equipment, refer to *Installation Instructions: Auxiliary Bracket*.

If pole has welded crossarms, skip *Bolt-on Crossarms* section. Proceed to *Electrical Components Enclosure section*.

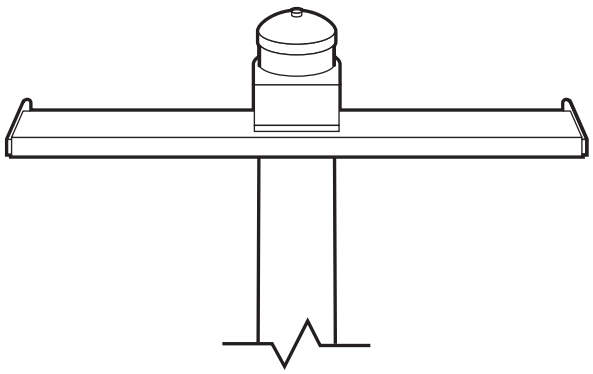

Welded crossarm configuration

(reference)

©2015 Musco Sports Lighting, LLC · LED ECE 9 · M-1917-en04-1

Bolt-on Crossarms

Overview

Due to shipping restrictions, it is sometimes necessary to ship crossarms separate from the poletop section. For these situations, the crossarms are designed to easily attach to the poletop.

Tools/Materials Needed

Musco Supplied:

- ❑ ¾ in drive 1 1/16 in socket
- ❑ ¾ in drive breaker bar
- ❑ ¾ in drive 4 in extension
- ❑ 1 1/16 in wrench
- ❑ Spreader bars
- ❑ ⅜ in fasteners (for spreader bars)
- ❑ ⅝ in structural fasteners
- ❑ 9/16 in wrench

Contractor Supplied:

- ❑ Black marker
- ❑ Torque wrench with 9/16 in socket

Assembly Procedure

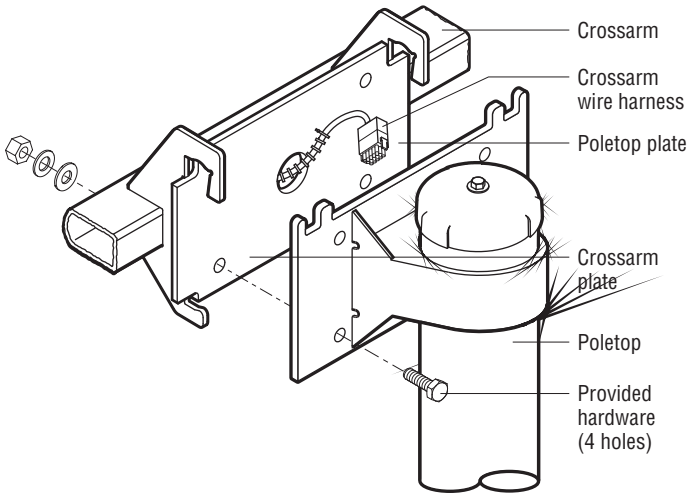

☑ Verify pole ID on crossarm matches ID of pole.

Note: Each crossarm is factory assembled for a specific position on poletop section to ensure correct aiming. Top side of crossarm is labeled with crossarm's position number. Example: Position 1 is installed on first position from top of poletop section.

1 Position crossarm near poletop, and feed crossarm wire harness through hole in center of poletop plate.

Route wire harness for crossarms 1–3 to top of pole.

Route wire harness for crossarms 4–7 to handhole below crossarm position 5.

2 Position crossarm as shown below.

☑ Ensure crossarm wire harness is not pinched between mating plates.

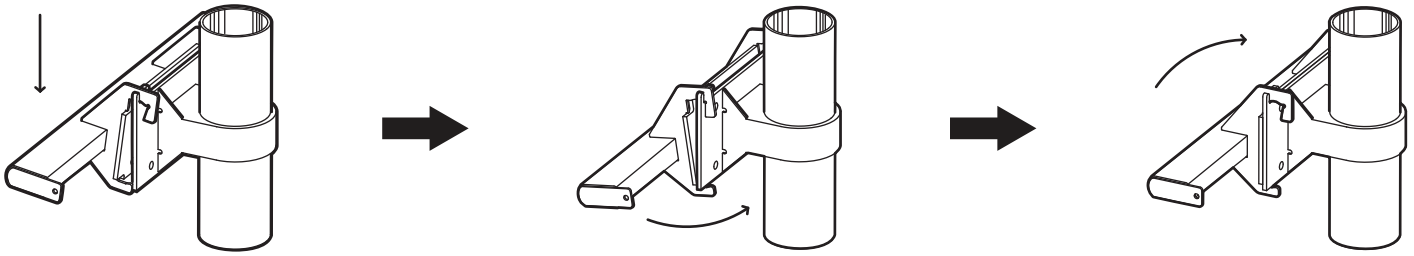

©2015 Musco Sports Lighting, LLC · LED ECE 9 · M-1917-en04-1

Bolt-on Crossarms

3 Position fasteners. Install bolts through plates with threads away from pole. Place direct tension indicating (DTI) washer next, with flat surface (orange material) against plate, and bumps facing out toward nut. Place flat washer next, followed by nut. Small ID markings on nut must face out to allow proper identification of nut.

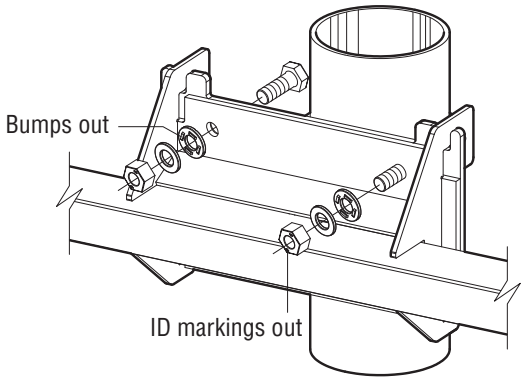

4 Snug all nuts. Using supplied breaker bar, 1 1/16 in socket, extension, and 1 1/16 in wrench, tighten each nut in sequence shown until a very small amount of orange extrusion shows in at least one place on each washer.

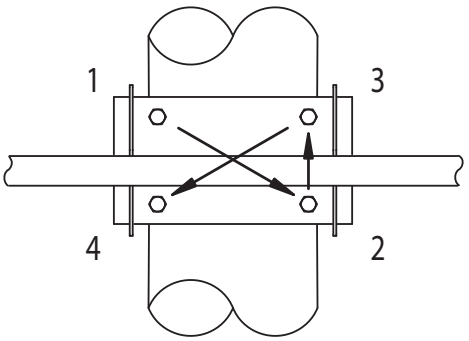

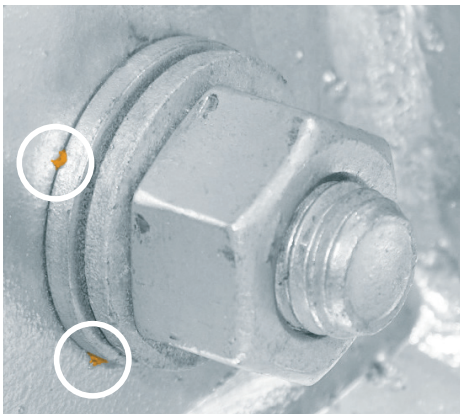

©2015 Musco Sports Lighting, LLC · LED ECE 9 · M-1917-en04-1

Bolt-on Crossarms

5 Using black marker, matchmark each nut and bolt. Make straight line across corner of nut, extending to plate. This allows you to see that step 6 has been completed.

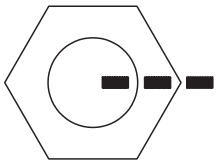

6 Tighten each nut ½ turn, in sequence shown in step 4. Do not allow hardened flat washer to turn and grind against DTI bumps. If flat washer grinds during tightening, try holding nut while turning bolt head.

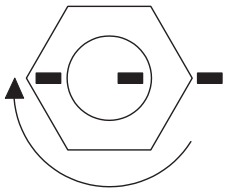

7 Repeat steps 1–6 for remaining crossarms.

Do not reuse structural fasteners. Discard if removed or loosened after tightening.

Note: Step 8 is for multiple crossarm configurations that are six luminaires wide or wider. If your project includes spreader bars, follow step 8. Spreader bars are bundled together and marked with the pole ID. Crossarms are stenciled indicating which tabs to use. Crossarms are joined in groups of two or three with the greatest grouping on top; do not form other groupings.

8 Install spreader bars with ⅜ in fasteners at the locations marked on each crossarm. Torque to 25 ft•lb (34 N•m).

Spreader bars may come in two sizes, 30 ½ in (775 mm) and 60 in (1524 mm). Always install longer bars to upper three crossarms.

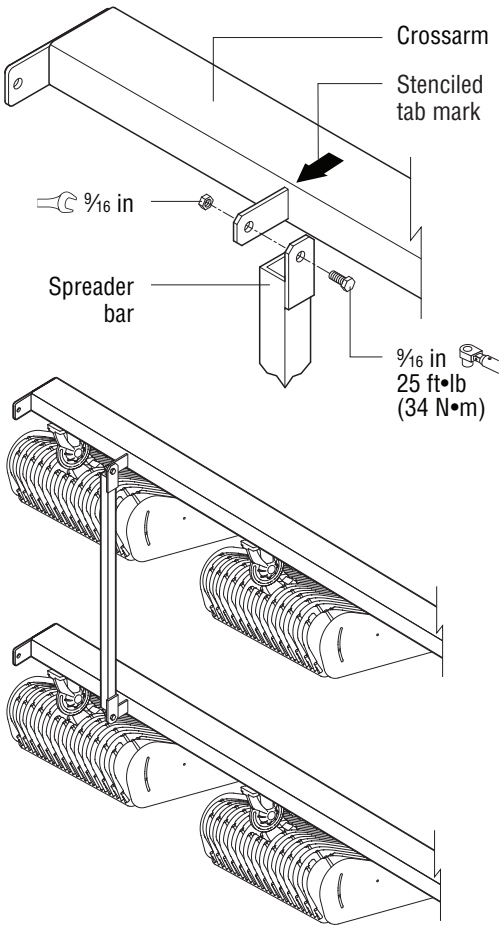

©2015 Musco Sports Lighting, LLC · LED ECE 9 · M-1917-en04-1

Electrical Components Enclosure

Overview

The electrical components enclosure is factory-wired and tested. Built-in hardware allows for easy attachment to the galvanized steel pole. Quick-connect plug-ins assure trouble-free connection to the poletop luminaire assembly via the wire harness.

Tools/Materials Needed

Musco Supplied

- ❑ 9⁄16 in wrench
- ❑ 3⁄16 in hex key

Contractor Supplied

- ❑ Phillips-head screwdriver
- ❑ Standard screwdriver

Assembly Procedure

Verify pole ID on electrical components enclosure matches pole location on *Field Aiming Diagram*.

Caution
Electrical components enclosures are heavy.
Electrical components enclosure may weigh up to 65 lb (30 kg). Lift carefully with two people to avoid injury.

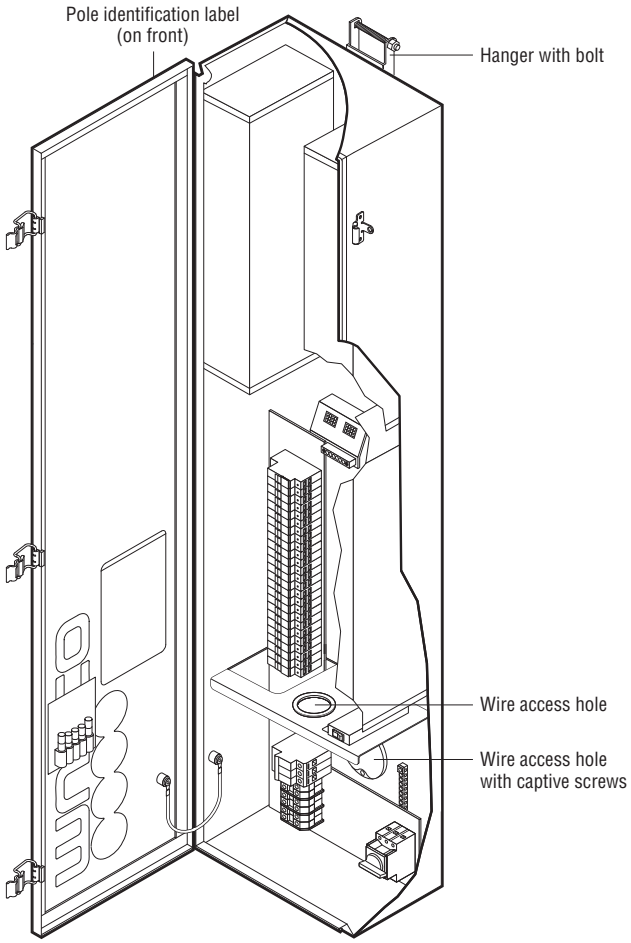

©2015 Musco Sports Lighting, LLC · LED ECE 9 · M-1917-en04-1

Electrical Components Enclosure

1 Mount bottom enclosure on pole. Align wire access hole with hub. Tighten captive screws using Phillips-head screwdriver. Tighten hanger bolt with 9⁄16 in wrench.

2 Mount middle and/or top enclosures. Align access hole with hub and slide box onto hanger bracket. Tighten hanger bolt with 9⁄16 in wrench.

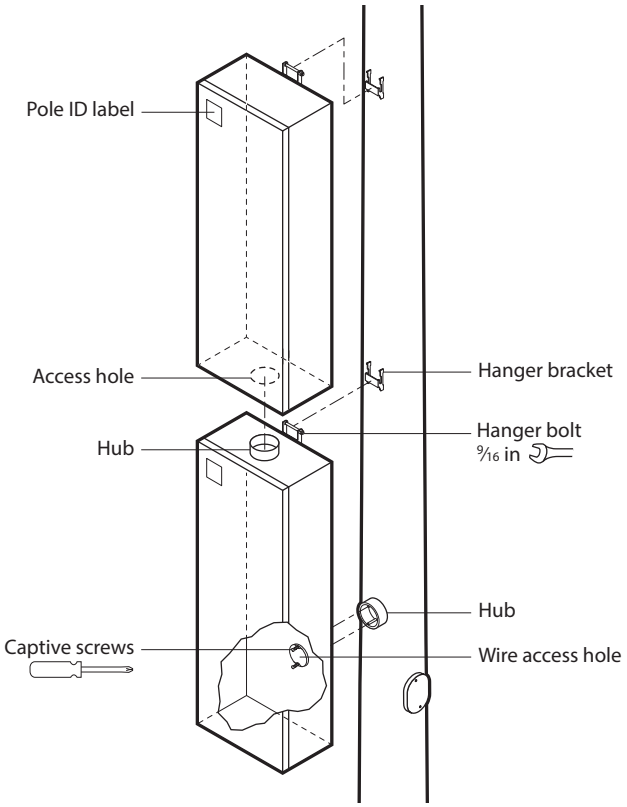

Only qualified personnel may perform wiring. Route wires as shown in step 3, but leave the final connections for your electrician. See section *Connecting to Underground Wiring*.

3 Route driver harnesses from top and middle enclosures to bottom enclosure and plug into primary wire harnesses mounted in bracket.

4 Route equipment grounding conductor and enclosure harnesses from top and middle enclosures to bottom enclosure.

5 Repeat steps 1 – 4 for each stack.

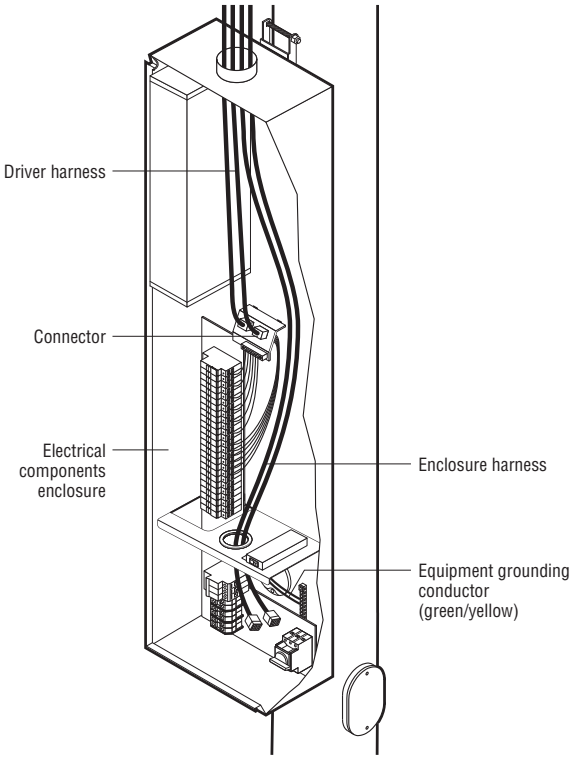

©2015 Musco Sports Lighting, LLC · LED ECE 9 · M-1917-en04-1

Electrical Components Enclosure

6 Route and connect communication cable in each electrical components enclosure to termination point in next sequential electrical components enclosure per illustration.

Note: Skip Step 6 if controller not present.

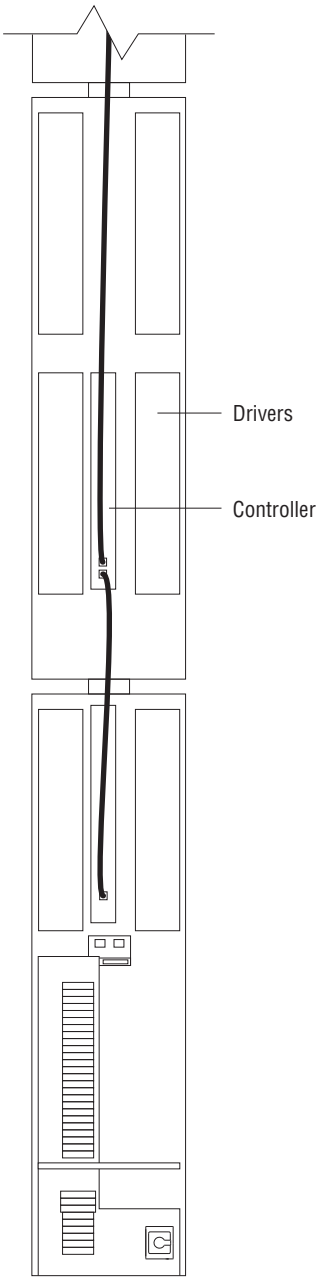

©2015 Musco Sports Lighting, LLC · LED ECE 9 · M-1917-en04-1

Wire Harness

Overview

The factory-built wire harness connects the electrical components enclosure to the poletop luminaire assembly.

Tools/Materials Needed

Musco Supplied
- ❑ 5⁄32 in hex key
- ❑ 9⁄16 in wrench

Contractor Supplied
- ❑ Fish tape
- ❑ Electrician's tape

Assembly Procedure

Verify pole ID on wire harness matches pole location on *Field Aiming Diagram*.

1 Remove handhole covers using 5⁄32 in hex key. Remove polecap using 9⁄16 in wrench.

2 Fish all pole wire harnesses between poletop and appropriate electrical components enclosure(s). Use lower handhole to access enclosure hubs. Ensure protective sleeve extends through access hub and tuck harnesses behind subpanel.

3 Attach support grips at poletop and midpole (if present).

4 Mate quick-connectors at poletop and inside electrical components enclosure(s). Match driver/luminaire IDs.

Note: Each bolt-on crossarm has at least one separate harness. There is one additional spade connector for pole alignment beam.

5 Replace handhole covers and polecap.

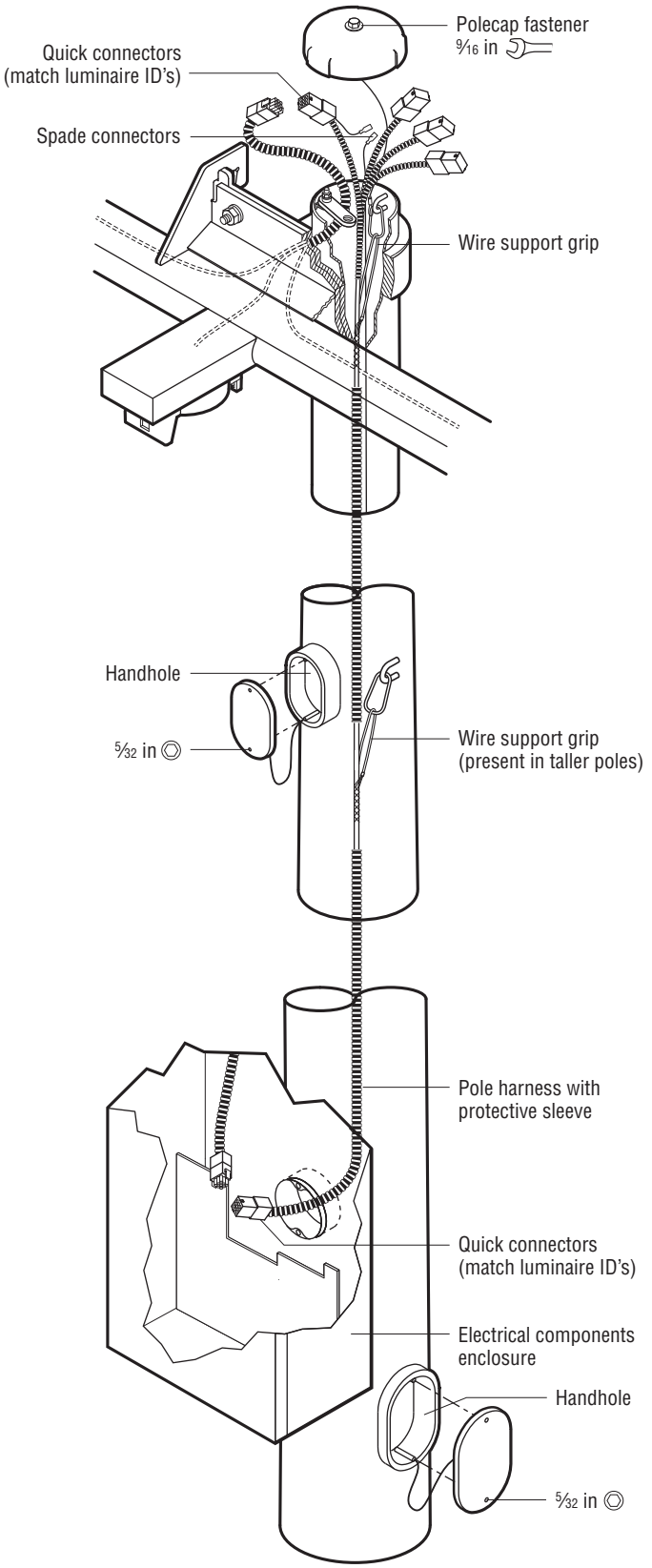

©2015 Musco Sports Lighting, LLC · LED ECE 9 · M-1917-en04-1

Luminaire Attachment

Overview

Luminaires are factory built and shipped in individual cartons. They are aimed in the factory and ready for installation. Do not disassemble knuckle.

Tools/Materials Needed

Musco Supplied

- ❑ 7⁄16 in ratcheting combination wrench

Assembly Procedure

Verify pole ID on luminaire cartons matches pole and location on *Field Aiming Diagram*.

1 Remove orange protective caps from luminaire knuckle and mounting plate; discard.

Note: Do not remove temporary protective cover (if present) from luminaire until ready to set pole.

Note: The luminaire style may vary from what is shown.

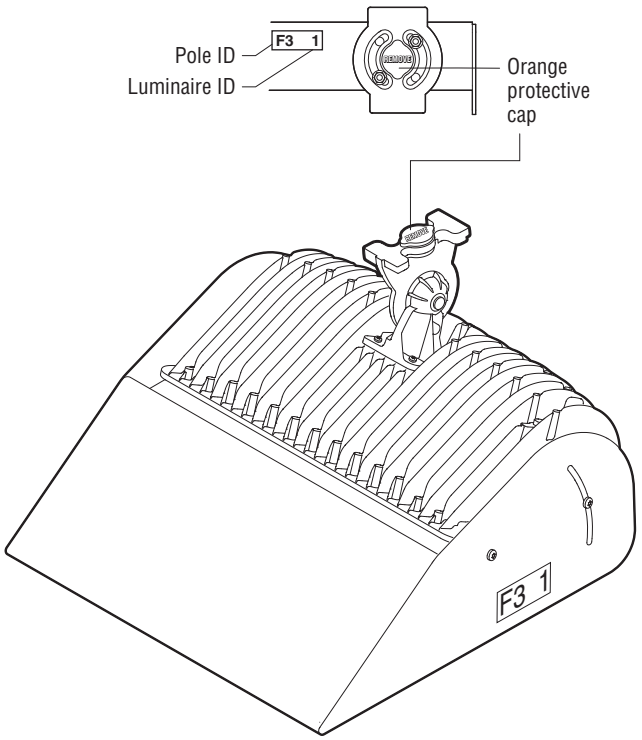

©2015 Musco Sports Lighting, LLC · LED ECE 9 · M-1917-en04-1

Luminaire Attachment

2 Match luminaire ID to crossarm and install luminaire onto mounting plate. Insert back of knuckle into mounting plate and pivot into position.

Note: The luminaire style may vary from what is shown.

Luminaire	Weight
96 LED	35 lbs (16 kg)
228/216 LED	45 lbs (20 kg)
228NB LED	95 lbs (43 kg)

Caution
Luminaire may be heavy. Lift carefully with two people to avoid injury.

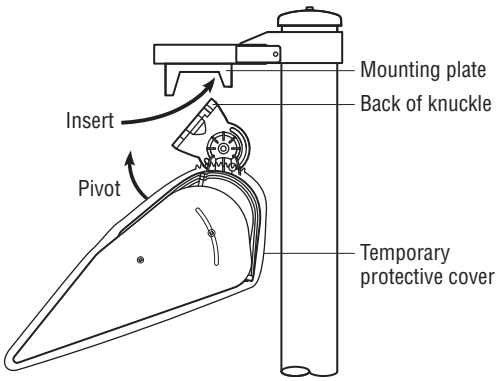

Or

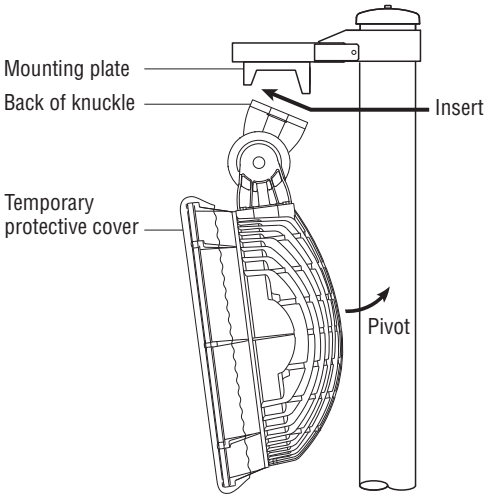

Or

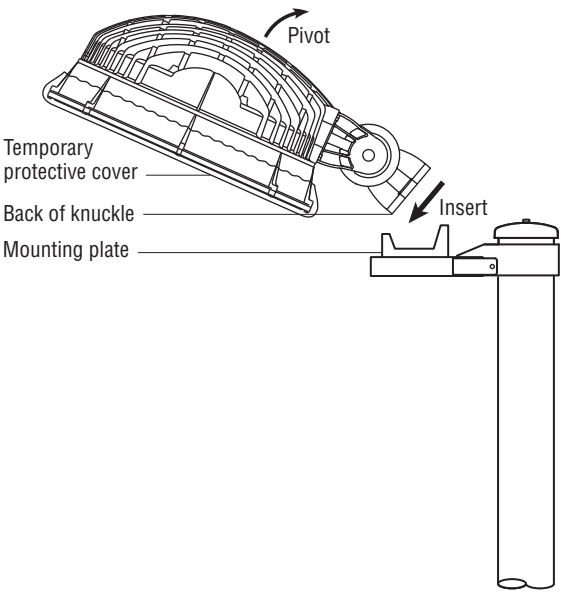

©2015 Musco Sports Lighting, LLC · LED ECE 9 · M-1917-en04-1

Luminaire Attachment

3 Tighten captive mounting bolts. Torque must not exceed 20 ft•lb (27 N•m). To avoid overtightening, use provided 7⁄16 in combination wrench.

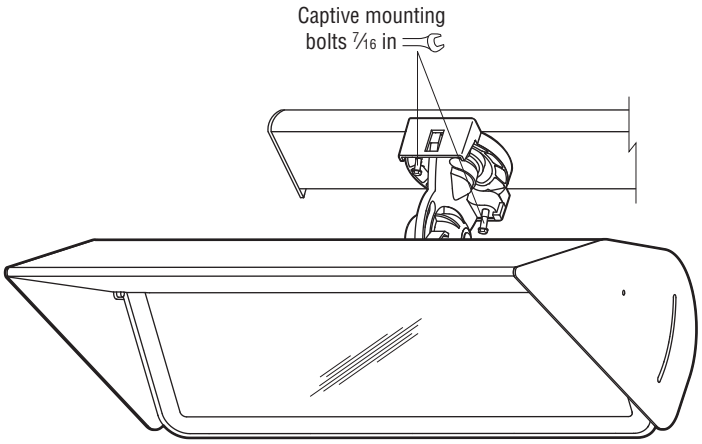

See *Installation Instructions: Climbing Steps and Safety Cable,* if your project includes these items.

©2015 Musco Sports Lighting, LLC · LED ECE 9 · M-1917-en04-1

Pole Setting and Alignment

Overview

All luminaires are factory aimed to their exact position on the field. To ensure the proper pole orientation, a simple-to-use pole alignment beam completes the precision field aiming. The pole alignment beam is attached in the factory to each pole.

Tools/Materials Needed

Musco Supplied

- ❑ *Field Aiming Diagram*
- ❑ Steel chain
- ❑ Steel bar
- ❑ Pole rotator kit
- ❑ Safety cutter (for removal of luminaire bag)
- ❑ Dishwashing liquid (original Dawn® or DIAO™ brand)
- ❑ Level

Contractor Supplied

- ❑ Chalk or pencil
- ❑ Load-rated shackles as required
- ❑ Load-rated nylon slings as required
- ❑ Spray paint, chalk, or flags (to mark aiming points on field)
- ❑ Two 1½ ton chain come-alongs

Installation Procedure

✓ Verify pole ID matches precast concrete base and pole location on *Field Aiming Diagram*.

1 Mark aiming point(s) on field using *Field Aiming Diagram*. Poles may have individual aiming points or may all be aimed to a common point.

2 Lubricate concrete base with provided dishwashing liquid.

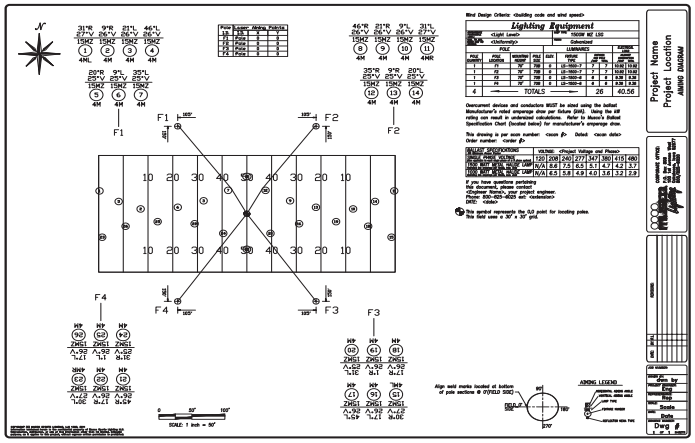

3 Attach pole rotator clamp approximately 12 in (300 mm) above bottom of pole. Wrap strap around pole and cinch tightly.

⚠ **Caution**
Risk of injury or property damage.
Rotator bar can swing with force as pole is lifted. Do not install until you are ready to lower pole onto base (step 8).

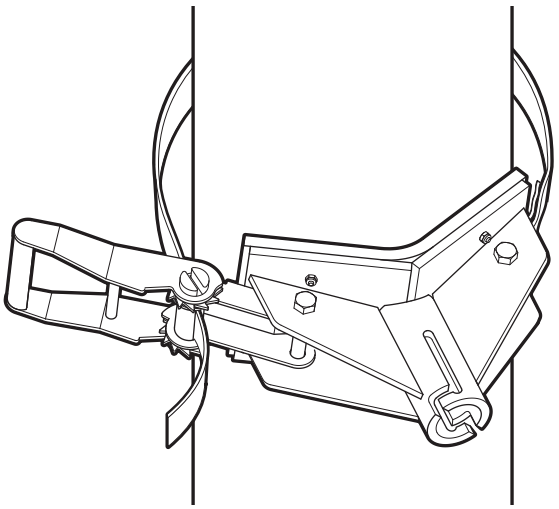

©2015 Musco Sports Lighting, LLC · LED ECE 9 · M-1917-en04-1

Pole Setting and Alignment

4 Remove temporary protective cover from luminaires (if present). Do not use knife.

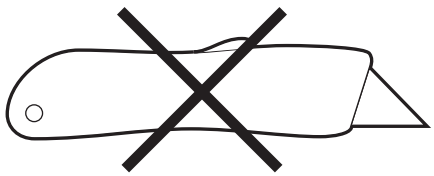

5 Turn on alignment beam and check. Device has toggle switch inside electrical components enclosure.

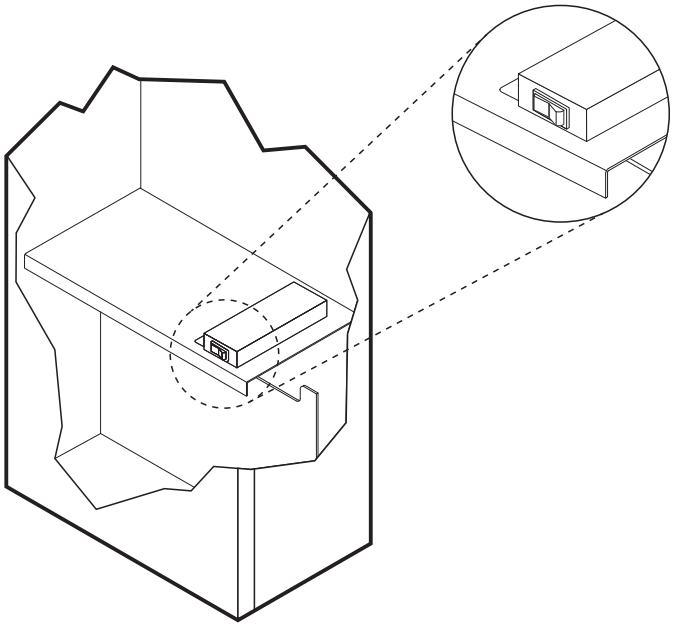

Warning
Laser radiation hazard
Pole alignment beam is safe for viewing at a distance of three feet (one meter) or more. Do not look into beam from closer than three feet (one meter). Do not use binoculars, camera, or telescope to view beam from any distance. Locator beam is a class 2M laser device. Wavelength: 635-660 nm, laser power for classification: <1 mW continuous, divergence: <1.5 mrad x 1 rad. Using alignment beam in a manner other than as described here may result in hazardous exposure. Do not modify, dismantle, or attempt to repair.

Warning
Improper rigging can cause pole sections to separate and fall.
Follow these instructions carefully. Do not choke pole or lift from crossarms.

6 Sling pole using this recommended method (see illustration). You must lift pole from lowest section. Friction between assembled sections will not hold pole together when lifting. To keep pole upright when lifting, ensure cradle point is above pole center of gravity. Ensure cradle point is free and will not cinch around pole or snag on hardware or components during lifting.

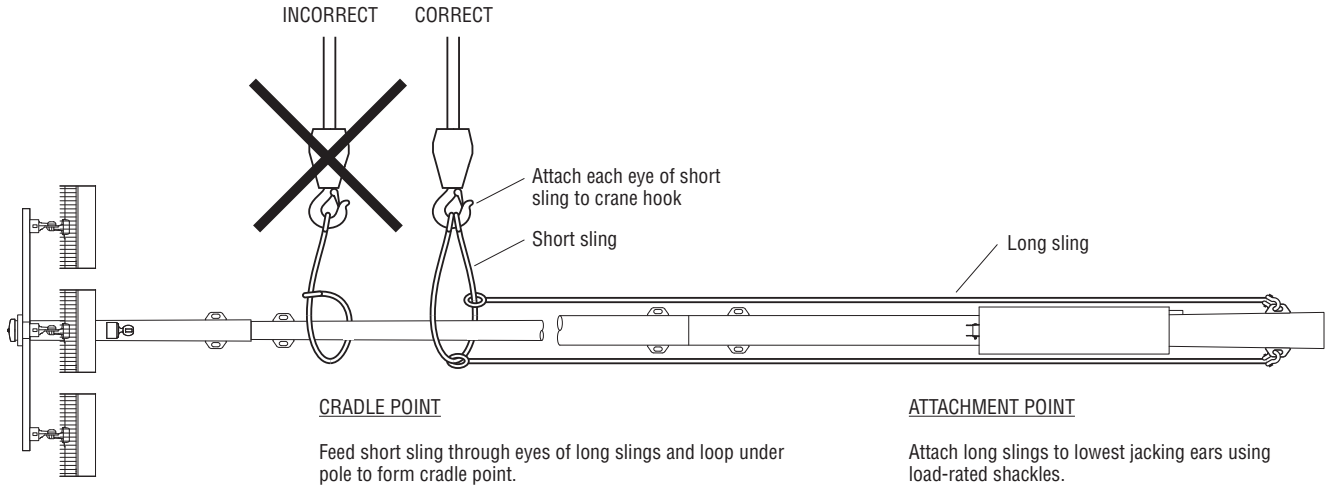

CRADLE POINT

Feed short sling through eyes of long slings and loop under pole to form cradle point.

Ensure cradle point is free and will not cinch around pole or snag on hardware or components during lifting.

Cradle point must be above pole assembly center of gravity.

ATTACHMENT POINT

Attach long slings to lowest jacking ears using load-rated shackles.

Lowest jacking ears carry entire weight of pole.

All slings must be rated for complete pole weight. Refer to *Musco Foundation and Pole Assembly* Drawing.

©2015 Musco Sports Lighting, LLC · LED ECE 9 · M-1917-en04-1

Pole Setting and Alignment

Warning
Crushing hazard. Pole can rotate with force, causing injury.
Do not stand under pole when lifting. Steady pole with two people holding crossarms. Allow pole to safely rotate around when it is high enough for crossarms and electrical components enclosures to clear the ground.

7 Lift pole. Use care to avoid dragging bottom of pole. Keep crane head below crossarms.

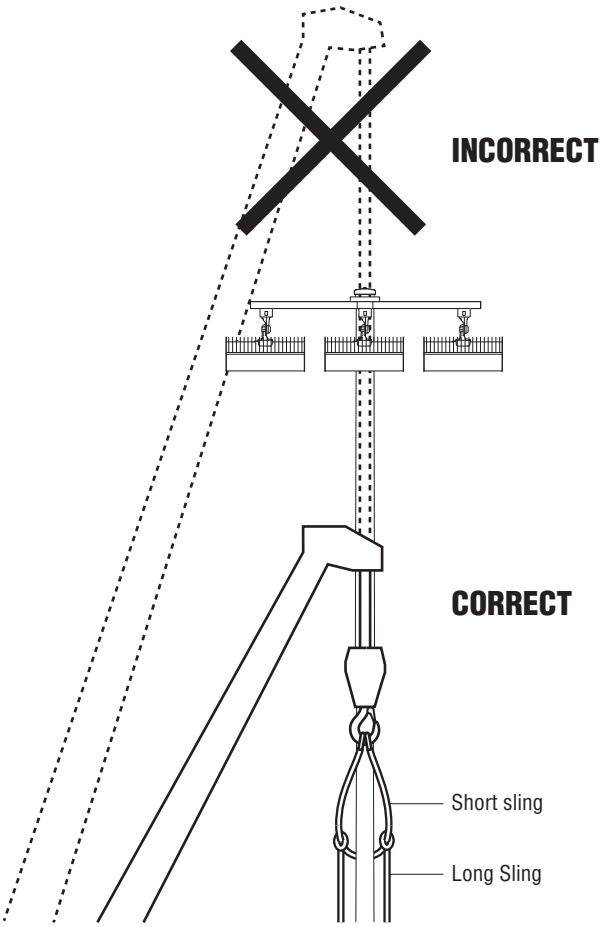

Watch for these signs to ensure you are lifting pole properly:

- Short sling slides freely up the pole and long slings tighten.
- Top of pole rises first.
- Short sling does not choke or snag on pole. Lowest jacking ears carry entire weight of pole.

8 When pole is suspended, insert rotator bar to clamp and turn to lock in place. Guide pole into position over base using rotator bar and lower onto base. Do not allow pole to seat on base until it is properly aimed (step 9). Pole should rotate with reasonable force applied to bar, but not freely.



Warning
Pinching hazard
Keep hands clear when setting pole on concrete base.

©2015 Musco Sports Lighting, LLC · LED ECE 9 · M-1917-en04-1

Pole Setting and Alignment

9

Align pole using alignment beam. Device projects a narrow vertical beam of light that is only visible when you are aligned with it. This step requires two people.

Person A: Stand on field aiming point and look at pole alignment device. It is mounted below lowest crossarm. Walk parallel to crossarms until you see beam. Signal person B to rotate pole left or right until beam aligns with aiming point. Beam may be visible, however when pole is aligned, you will see a bright flash as you stand directly on aiming point.

Person B: Following direction from person A, rotate pole left or right until it is aligned.

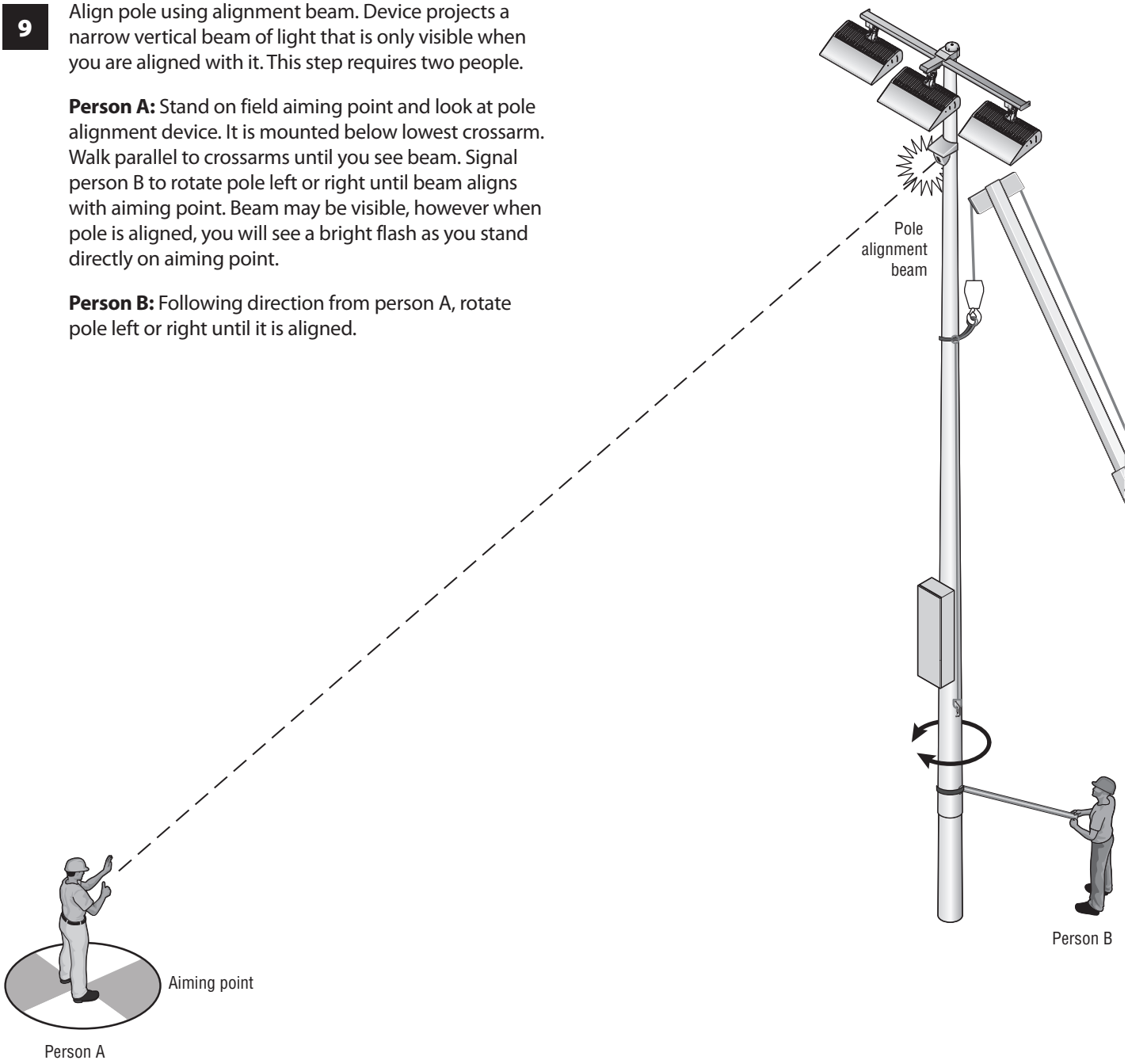

Warning
Laser radiation hazard
Pole alignment beam is safe for viewing at a distance of three feet (one meter) or more. Do not look into beam from closer than three feet (one meter). Do not use binoculars, camera, or telescope to view beam from any distance. Locator beam is a class 2M laser device. Wavelength: 635-660 nm, laser power for classification: <1 mW continuous, divergence: <1.5 mrad x 1 rad. Using alignment beam in a manner other than as described here may result in hazardous exposure. Do not modify, dismantle, or attempt to repair.

©2015 Musco Sports Lighting, LLC · LED ECE 9 · M-1917-en04-1

Pole Setting and Alignment

10 Once pole is aligned, use level to draw a thin vertical alignment mark on pole and concrete base. Use mark to verify alignment is maintained while lowering pole (step 11) and jacking onto base (step 12).

11 Lower pole into position. Hold pole rotator bar to maintain alignment until pole seats on base. Remove rotator bar and clamp.

12 Insert provided steel bar through base. Wrap provided chain around base below steel bar. Attach two 1½ ton come-alongs to jacking ears. To avoid twisting, attach come-alongs to provided chain directly below jacking ears. If ears align parallel with steel bar, do not use chain. Pull pole down onto base, keeping marks aligned. Ensure minimum overlap per Musco *Foundation and Pole Assembly Drawing*.

If pole seats out of alignment, contact Musco to request separating tools. See *Installation Instructions: Separating Steel Pole from Concrete Base*.

If pole has climbing steps and safety cable, see *Installation Instructions: Climbing Steps and Safety Cable* for cable tensioning instructions.

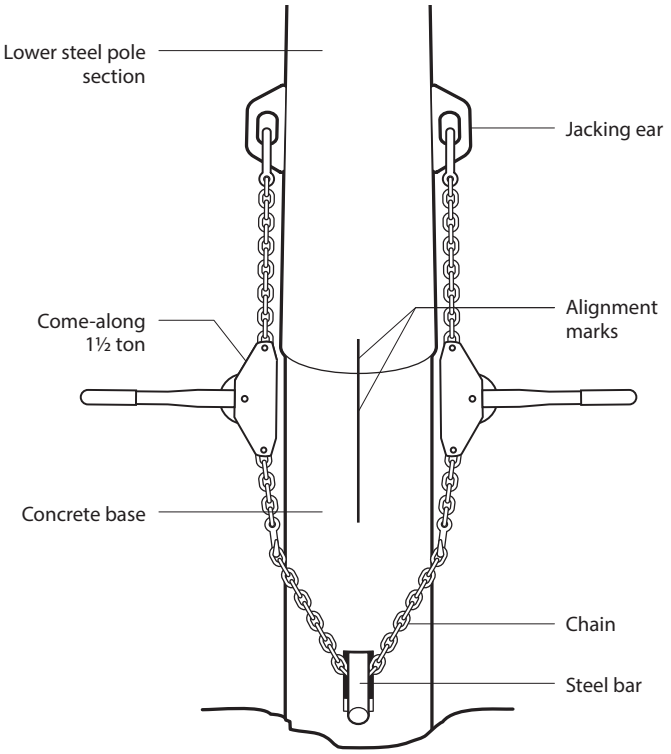

©2015 Musco Sports Lighting, LLC · LED ECE 9 · M-1917-en04-1

Connecting to Supply Wiring

Overview

The final step of installation is connecting the supply wiring at the subpanel. Terminals for phase wires and neutral (if used), disconnect switch with lockout, and equipment ground bar are provided on the subpanel in the electrical components enclosure. If there are multiple circuits on the pole, a disconnect is provided for each circuit. This may be on a separate subpanel in another enclosure. The lighting system uses an integrated lightning ground embedded in the precast concrete base. Depending on foundation design and/or soil conditions, a supplemental grounding electrode may be required.

Tools/Materials Needed

Musco Supplied

- ❑ 3⁄16 in hex key (ground bar)
- ❑ 5⁄16 in hex key (bonding terminal inside handhole)
- ❑ 5⁄32 in hex key (handhole covers)
- ❑ 5 mm hex key (125 A disconnect terminals)
- ❑ Equipment bonding jumper

Contractor Supplied

- ❑ Underground wiring and conduit
- ❑ Main power disconnect and distribution panel(s)
- ❑ Standard screwdriver
- ❑ 10 ft (3 m) stepladder or small line truck

Installation Procedure

Musco *Control System Summary* or *Field Aiming Diagram* provides electrical loading information needed to size wire and switchgear. Musco provides instructions for installing Control-Link™ control system or lighting contactor cabinet when these items are part of your project.

1 Route all power leads for lighting equipment to appropriate subpanel locations. Poles with multiple circuits have multiple disconnect switches, sometimes in separate enclosures. Route power leads through pole if necessary. Match luminaire IDs on wiring to subpanel.

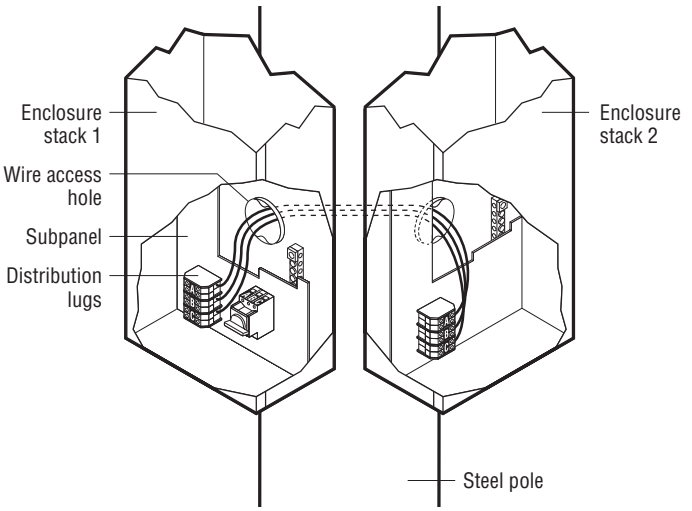

2 Connect equipment grounding conductors (green/yellow) from each upper enclosure to equipment ground bar in bottom enclosure. If pole has multiple stacks, connect bonding jumper from stack one. Tighten lugs using 3⁄16 in hex key.

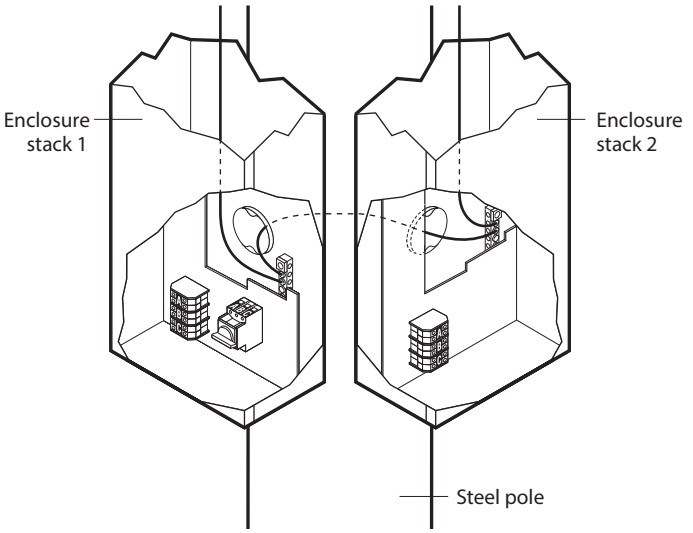

©2015 Musco Sports Lighting, LLC · LED ECE 9 · M-1917-en04-1

Connecting to Supply Wiring

3 Remove handhole cover using 5⁄32 in hex key. Route supply wiring through access hub into electrical components enclosure.

4 Connect equipment grounding conductor (supply) to ground bar. Tighten lug using 3⁄16 in hex key.

Disconnect is rated for copper wire only. Contact Musco for adaptor or use UL Listed adaptor for aluminum supply wire.

5 Connect phase wires (supply) to disconnect switch. Tighten lugs using standard screwdriver (45 A disconnect) or 5 mm hex key (125 A disconnect). Connect neutral wire (if used) to distribution lug. Tighten lug using standard screwdriver.

6 Route provided equipment bonding jumper (green/yellow) through access hub to pole grounding lug inside handhole. Tighten lug using 5⁄16 in hex key.

7 Ensure all handhole covers are installed and electrical components enclosure is closed and latched.

If your project includes a supplemental grounding electrode kit, follow instructions in kit for installing electrode.

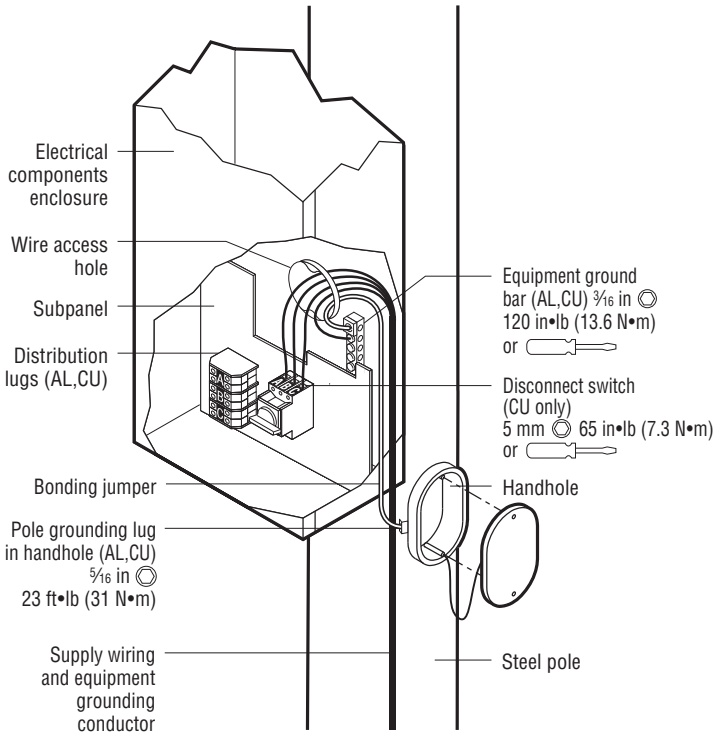

Warning
Risk of electric shock.
Terminate equipment grounding conductor at equipment ground bar in electrical components enclosure.

Warning
Lightning hazard.
For poles located near metal fences, metal bleachers, or other metal structures, bond structures to pole ground to maintain equal electrical potential.

©2015 Musco Sports Lighting, LLC · LED ECE 9 · M-1917-en04-1

Notes

©2015 Musco Sports Lighting, LLC · LED ECE 9 · M-1905-en04-1

Notes

©2015 Musco Sports Lighting, LLC · LED ECE 9 · M-1905-en04-1

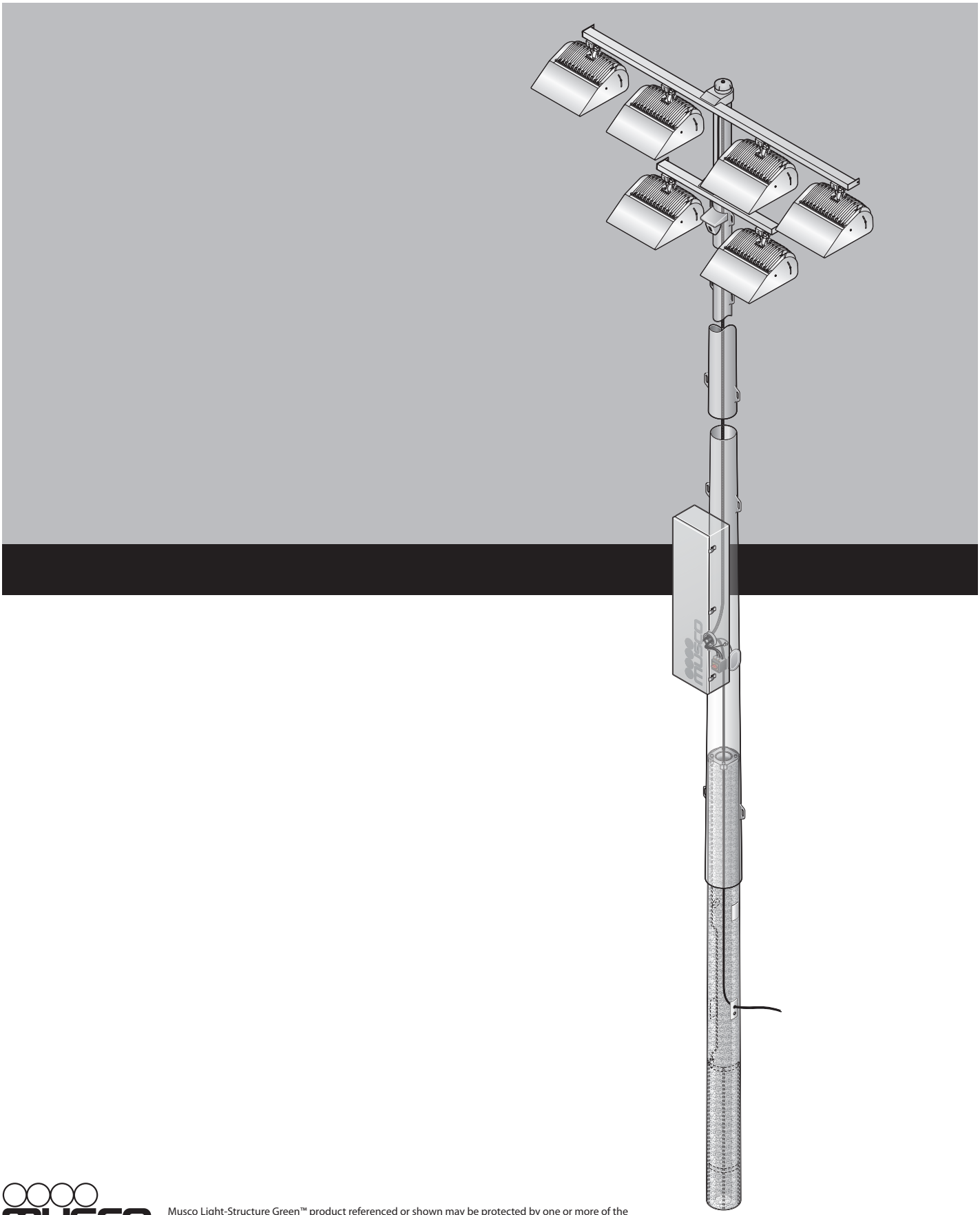

www.musco.com

Musco Light-Structure Green™ product referenced or shown may be protected by one or more of the following patents. United States Patents: D593883, D682459, D695949, D695952, 6250596, 7956551, 7956556, 8163993, 8300219, 8508152, 8575866, 8742254, 8789967. Canada Patent(s): 158611. China Patent for Design: ZL201230474541.X, ZL201330222107.7, ZL201330222318.0. Germany Patent(s): 402014002112. Republic of Korea Patent(s): 30-0748680. United Kingdom Patent(s): 4036147. U.S. and foreign patents pending. [Pat_057]

©2015 Musco Sports Lighting, LLC · LED ECE 9 · M-1917-en04-1

Luminaire and Driver – TLC-BT-575

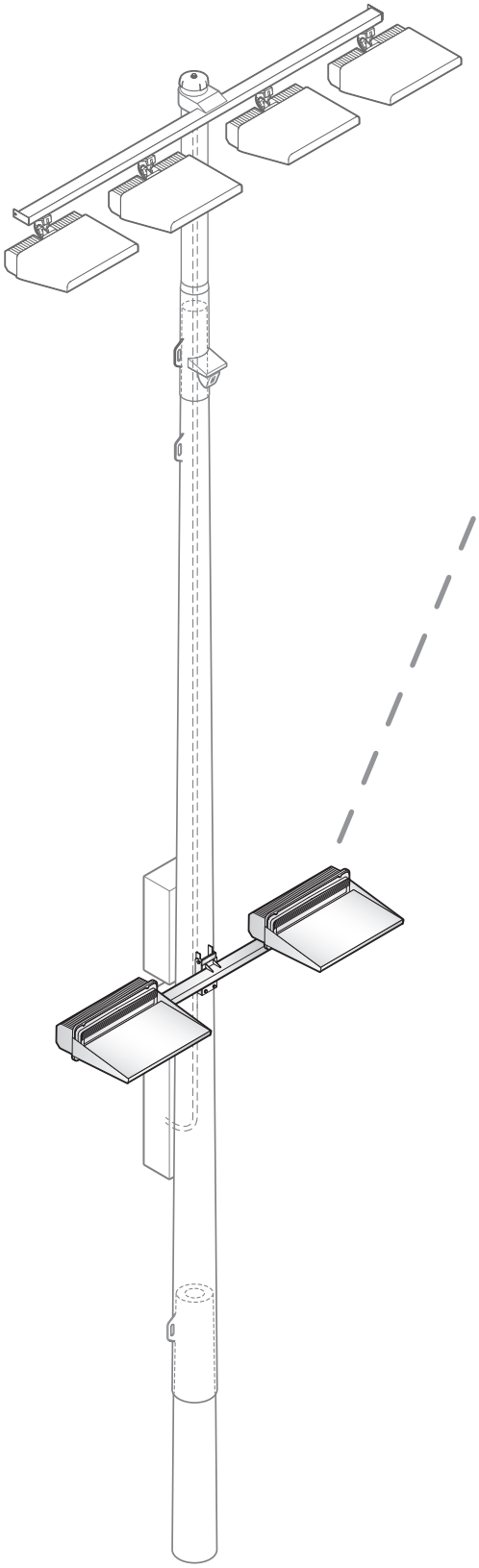

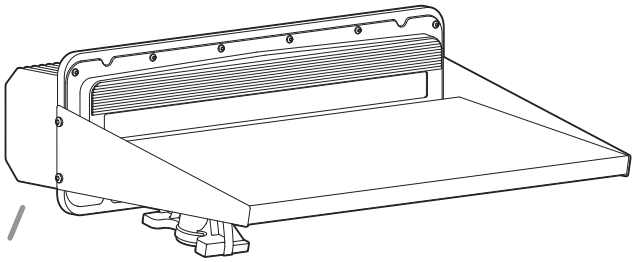

Luminaire Data

Weight (luminaire)	34 lb (15 kg)
UL listing number	E338094
UL listed for USA/Canada	UL1598 CSA-C22.2 No.250.0
CE Declaration	LVD, EMC, RoHS
Ingress protection (luminaire)	IP65
Impact rating	IK07
Material and finish	Aluminum, powder-coat painted
Wind speed rating (aiming only)	150 mi/h (67 m/s)
UL, IEC ambient temperature rating (luminaire)	50°C (122°F)

Photometric Characteristics

Projected lumen maintenance per IES TM-21-11	
L90 (20k)	>120,000 h
L80 (20k)	>120,000 h
L70 (20k)	>120,000 h
Lumens[1]	52,000
CIE correlated color temperature	5700 K
Color rendering index (CRI)	75 typ, 70 min
LED binning tolerance	7-step MacAdam Ellipse

Footnotes:

1) Incorporates appropriate dirt depreciation factor for life of luminaire.

All components from foundation to poletop are designed to work together in Light-Structure System™ to ensure reliable, trouble-free operation.

U.S. and foreign patent(s) issued and pending • 2022 Musco Sports Lighting, LLC • TLC-BT-575 5700K 75 CRI • M-2477-en04-6

Luminaire and Driver – TLC-BT-575

Driver Data

Electrical Data

Rated wattage[1]	
Per driver	575 W
Per luminaire	575 W
Number of luminaires per driver	1
Starting (inrush) current	<40 A, 256 µs
Fuse rating	15 A
UL, IEC ambient temperature rating, electrical components enclosure	50°C (122°F)
Ingress protection, electrical components enclosure	IP54
Efficiency	95%
Total harmonic distortion (THD) at full output	<20%

Typical Wiring

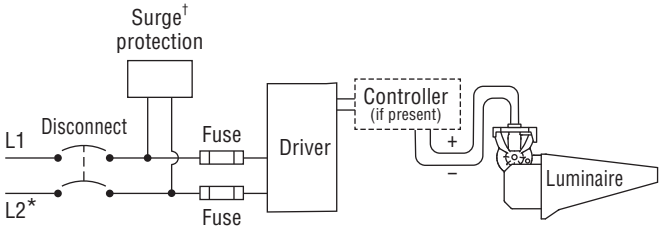

* If L2 is neutral then not switched or fused.
† Not present if indoor installation.

	200 Vac 50/60 Hz	208 Vac 60 Hz	220 Vac 50/60 Hz	230 Vac 50 Hz	240 Vac 50/60 Hz	277 Vac 60 Hz	347 Vac 60 Hz	380 Vac 50/60 Hz	400 Vac 50 Hz	415 Vac 50 Hz	480 Vac 60 Hz
Max operating current per luminaire[2]	3.48 A	3.35 A	3.16 A	3.03 A	2.90 A	2.51 A	2.01 A	1.83 A	1.74 A	1.68 A	1.45 A

Footnotes:

1) Rated wattage is the power consumption, including driver efficiency losses, at stabilized operation in 25°C ambient temperature environment.

2) Operating current includes allowance for 0.90 minimum power factor, operating temperature, and LED light source manufacturing tolerances.

Notes

1. Use thermal magnetic HID-rated or D-curve circuit breakers.
2. See *Musco Control System Summary* for circuit information.

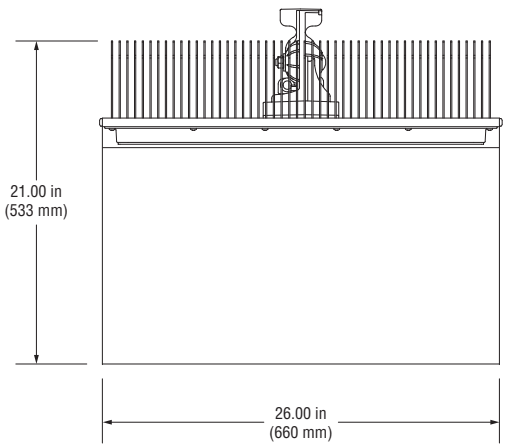

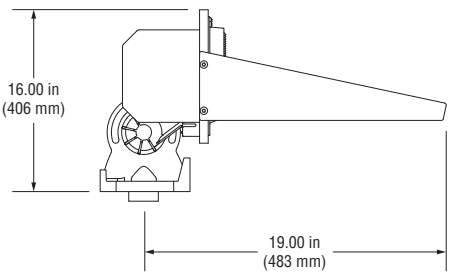

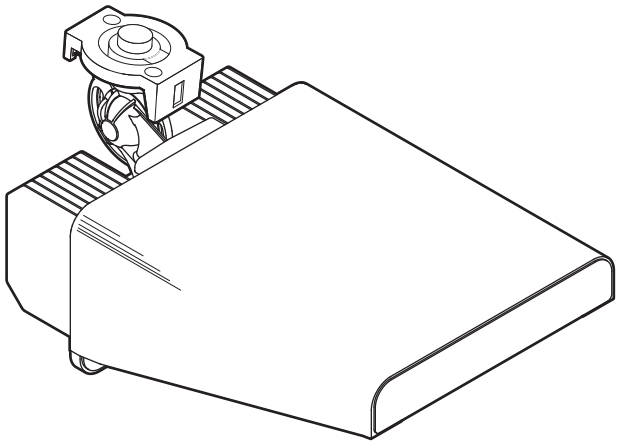

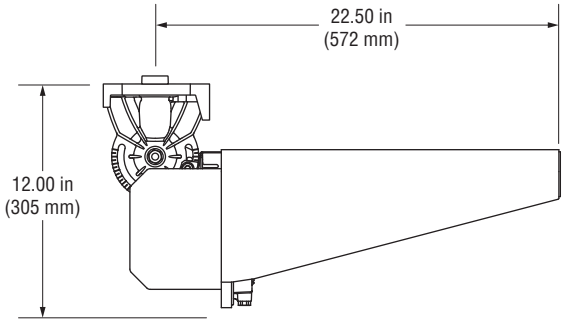

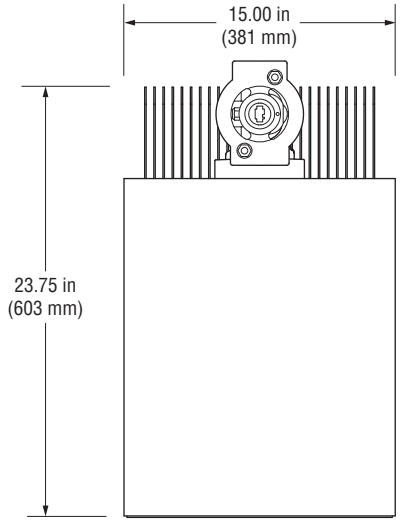

Luminaire Data

Weight (luminaire)	25 lb (11 kg)
UL listing number	E338094
UL listed for USA / Canada	UL1598 CSA-C22.2 No.250.0
CE Declaration	LVD, EMC, RoHS
Ingress protection, luminaire	(pending) IP65
Impact rating	IK07
Material and finish	Aluminum, powder-coat painted
Wind speed rating (aiming only)	150 mi/h (67 m/s)
UL, IEC ambient temperature rating, luminaire	(pending) 50°C (122°F)

Photometric Characteristics

Projected lumen maintenance per IES TM-21-11	
L90 (20k)	>120,000 h
L80 (20k)	>120,000 h
L70 (20k)	>120,000 h
Lumens[1]	67,000
CIE correlated color temperature	5700 K
Color rendering index (CRI)	75 typ, 70 min
LED binning tolerance	7-step MacAdam Ellipse

Footnotes:

1) Incorporates appropriate dirt depreciation factor for life of luminaire.

U.S. and foreign patent(s) issued and pending • ©2018, 2020 Musco Sports Lighting, LLC • TLC-LED-550 5700K 75 CRI • M-3596-en04-2

Driver Data

Electrical Data

Rated wattage[1]	
Per driver	1080 W
Per luminaire	540 W
Number of luminaires per driver	2
Starting (inrush) current	<40 A, 256 µs
Fuse rating	15 A
UL, IEC ambient temperature rating, electrical components enclosure	(pending) 50°C (122°F)
Ingress protection, electrical components enclosure	IP54
Efficiency	95%
Dimming mode	optional
Range, energy consumption	15 - 100%
Range, light output	20 - 100%
Flicker	<2%
Total harmonic distortion (THD) at full output	<20%

Typical Wiring

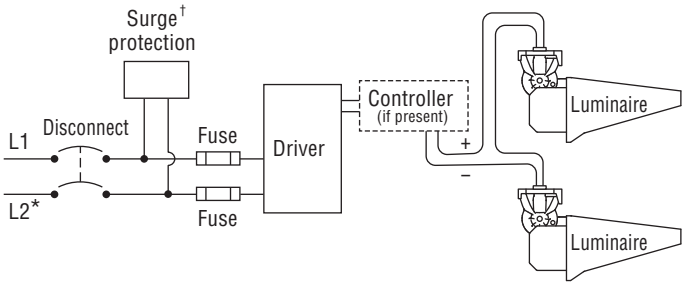

* If L2 (com) is neutral then not switched or fused.
† Not present if indoor installation.

	200 Vac 50/60 Hz	208 Vac 60 Hz	220 Vac 50/60 Hz	230 Vac 50 Hz	240 Vac 50/60 Hz	277 Vac 60 Hz	347 Vac 60 Hz	380 Vac 50/60 Hz	400 Vac 50 Hz	415 Vac 50 Hz	480 Vac 60 Hz
Max operating current per luminaire[2]	3.32 A	3.19 A	3.02 A	2.89 A	2.77 A	2.40 A	1.92 A	1.75 A	1.66 A	1.60 A	1.39 A

Footnotes:

1) Rated wattage is the power consumption, including driver efficiency losses, at stabilized operation in 25°C ambient temperature environment.

2) Operating current includes allowance for 0.90 minimum power factor, operating temperature, and LED light source manufacturing tolerances.

Notes

1. Use thermal magnetic HID-rated or D-curve circuit breakers.
2. See *Musco Control System Summary* for circuit information.

Luminaire and Driver – TLC-LED-900

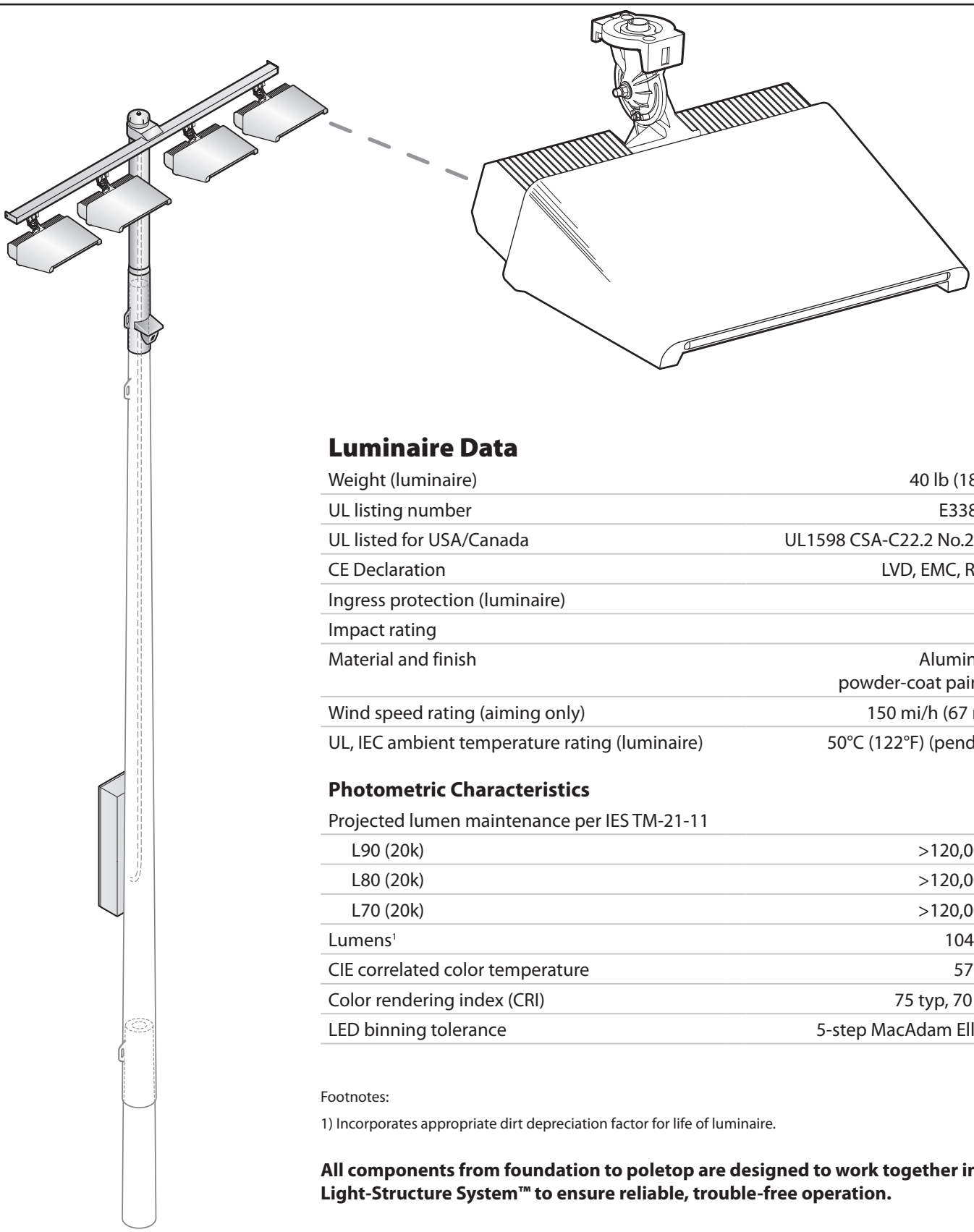

Luminaire Data

Weight (luminaire)	40 lb (18 kg)
UL listing number	E338094
UL listed for USA/Canada	UL1598 CSA-C22.2 No.250.0
CE Declaration	LVD, EMC, RoHS
Ingress protection (luminaire)	IP65
Impact rating	IK07
Material and finish	Aluminum, powder-coat painted
Wind speed rating (aiming only)	150 mi/h (67 m/s)
UL, IEC ambient temperature rating (luminaire)	50°C (122°F) (pending)

Photometric Characteristics

Projected lumen maintenance per IES TM-21-11	
L90 (20k)	>120,000 h
L80 (20k)	>120,000 h
L70 (20k)	>120,000 h
Lumens[1]	104,000
CIE correlated color temperature	5700 K
Color rendering index (CRI)	75 typ, 70 min
LED binning tolerance	5-step MacAdam Ellipse

Footnotes:

1) Incorporates appropriate dirt depreciation factor for life of luminaire.

All components from foundation to poletop are designed to work together in Light-Structure System™ to ensure reliable, trouble-free operation.

U.S. and foreign patent(s) issued and pending • ©2018, 2023 Musco Sports Lighting, LLC • TLC-LED-900 5700 K 75 CRI Typ • M-2629-en04-7_2023

Luminaire and Driver – TLC-LED-900

Driver Data

Electrical Data

Rated wattage[1]	
Per driver	880 W
Per luminaire	880 W
Number of luminaires per driver	1
Starting (inrush) current	<40 A, 256 µs
Fuse rating	15 A
UL, IEC ambient temperature rating (electrical components enclosure)	50°C (122°F) (pending)
Ingress protection (electrical components enclosure)	IP54
Efficiency	95%
Dimming mode	optional
Range, energy consumption	21 – 100%
Range, light output	26 – 100%
Flicker	<2%
Total harmonic distortion (THD) at full output	<20%

Typical Wiring

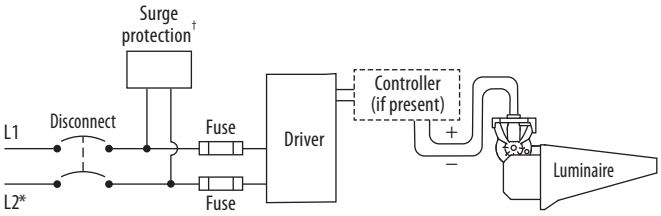

* If L2 is neutral then not switched or fused.
† Not present if indoor installation.

	200 Vac 50/60 Hz	208 Vac 60 Hz	220 Vac 50/60 Hz	230 Vac 50 Hz	240 Vac 50/60 Hz	277 Vac 60 Hz	347 Vac 60 Hz	380 Vac 50/60 Hz	400 Vac 50 Hz	415 Vac 50 Hz	480 Vac 60 Hz
Max operating current per luminaire[2]	5.43 A	5.22 A	4.93 A	4.72 A	4.52 A	3.92 A	3.13 A	2.86 A	2.72 A	2.62 A	2.26 A

Footnotes:

1) Rated wattage is the power consumption, including driver efficiency losses, at stabilized operation in 25°C ambient temperature environment.

2) Operating current includes allowance for 0.90 minimum power factor, operating temperature, and LED light source manufacturing tolerances.

Notes

1. Use thermal magnetic HID-rated or D-curve circuit breakers.
2. See *Musco Control System Summary* for circuit information.

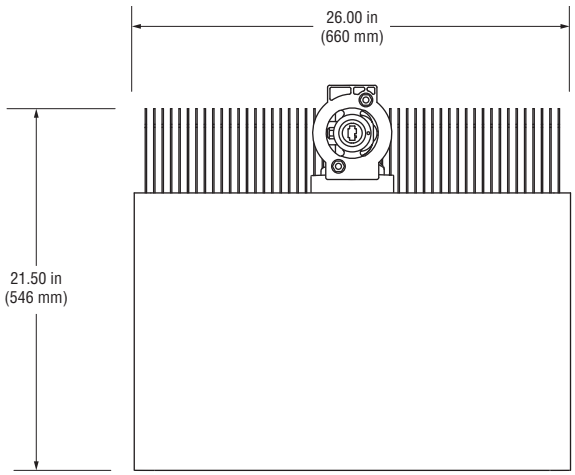

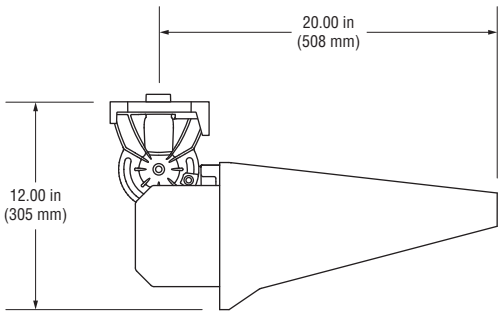

U.S. and foreign patent(s) issued and pending • ©2018, 2023 Musco Sports Lighting, LLC • TLC-LED-900 5700 K 75 CRI Typ • M-2629-en04-7_2023

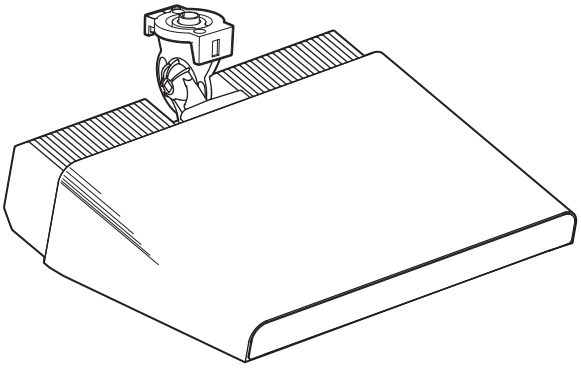

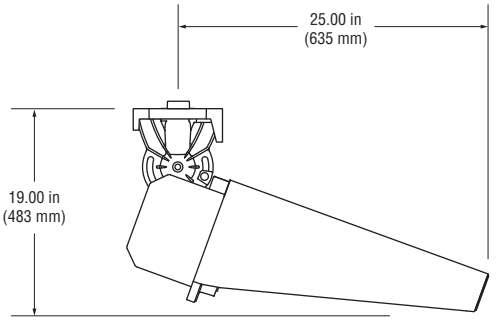

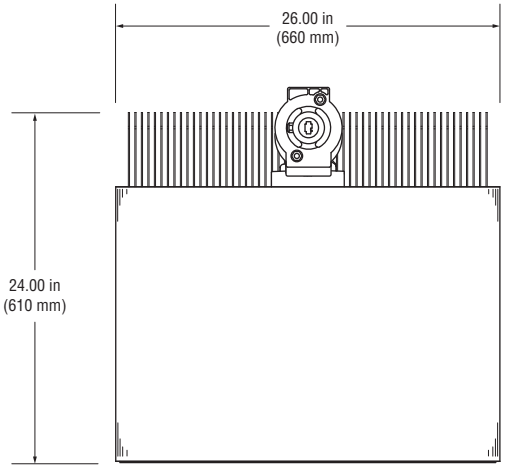

Luminaire Data

Weight (luminaire)	45 lb (20 kg)
UL listing number	E338094
UL listed for USA/Canada	UL1598 CSA-C22.2 No.250.0
CE Declaration	LVD, EMC, RoHS
Ingress protection (luminaire)	IP65
Impact rating	IK07
Material and finish	Aluminum, powder-coat painted
Wind speed rating (aiming only)	150 mi/h (67 m/s)
UL, IEC ambient temperature rating (luminaire)	50°C (122°F) (pending)

Photometric Characteristics

Projected lumen maintenance per IES TM-21-11	
L90 (20k)	>120,000 h
L80 (20k)	>120,000 h
L70 (20k)	>120,000 h
Lumens[1]	150,000
CIE correlated color temperature	5700 K
Color rendering index (CRI)	75 typ, 70 min
LED binning tolerance	5-step MacAdam Ellipse

Footnotes:

1) Incorporates appropriate dirt depreciation factor for life of luminaire.

U.S. and foreign patent(s) issued and pending • ©2019, 2023 Musco Sports Lighting, LLC • TLC-LED-1200 5700 K 75 CRI Typ • M-2943-en04-7_2023

Driver Data

Electrical Data

Rated wattage[1]	
Per driver	1170 W
Per luminaire	1170 W
Number of luminaires per driver	1
Starting (inrush) current	<40 A, 256 µs
Fuse rating	15 A
UL, IEC ambient temperature rating (electrical components enclosure)	50°C (122°F) (pending)
Ingress protection (electrical components enclosure)	IP54
Efficiency	95%
Dimming mode	optional
Range, energy consumption	13 – 100%
Range, light output	18 – 100%
Flicker	<2%
Total harmonic distortion (THD) at full output	<20%

Typical Wiring

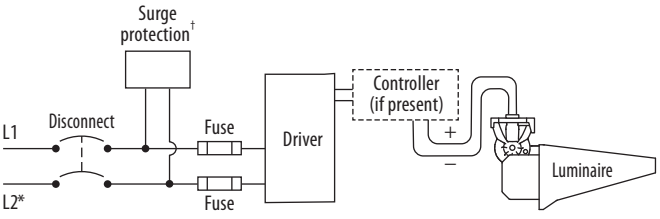

* If L2 is neutral then not switched or fused.
† Not present if indoor installation.

	200 Vac 50/60 Hz	208 Vac 60 Hz	220 Vac 50/60 Hz	230 Vac 50 Hz	240 Vac 50/60 Hz	277 Vac 60 Hz	347 Vac 60 Hz	380 Vac 50/60 Hz	400 Vac 50 Hz	415 Vac 50 Hz	480 Vac 60 Hz
Max operating current per luminaire[2]	7.20 A	6.92 A	6.54 A	6.26 A	6.00 A	5.20 A	4.15 A	3.79 A	3.60 A	3.47 A	3.00 A

Footnotes:

1) Rated wattage is the power consumption, including driver efficiency losses, at stabilized operation in 25°C ambient temperature environment.

2) Operating current includes allowance for 0.90 minimum power factor, operating temperature, and LED light source manufacturing tolerances.

Notes

1. Use thermal magnetic HID-rated or D-curve circuit breakers.
2. See *Musco Control System Summary* for circuit information.

U.S. and foreign patent(s) issued and pending • ©2019, 2023 Musco Sports Lighting, LLC • TLC-LED-1200 5700 K 75 CRI Typ • M-2943-en04-7_2023

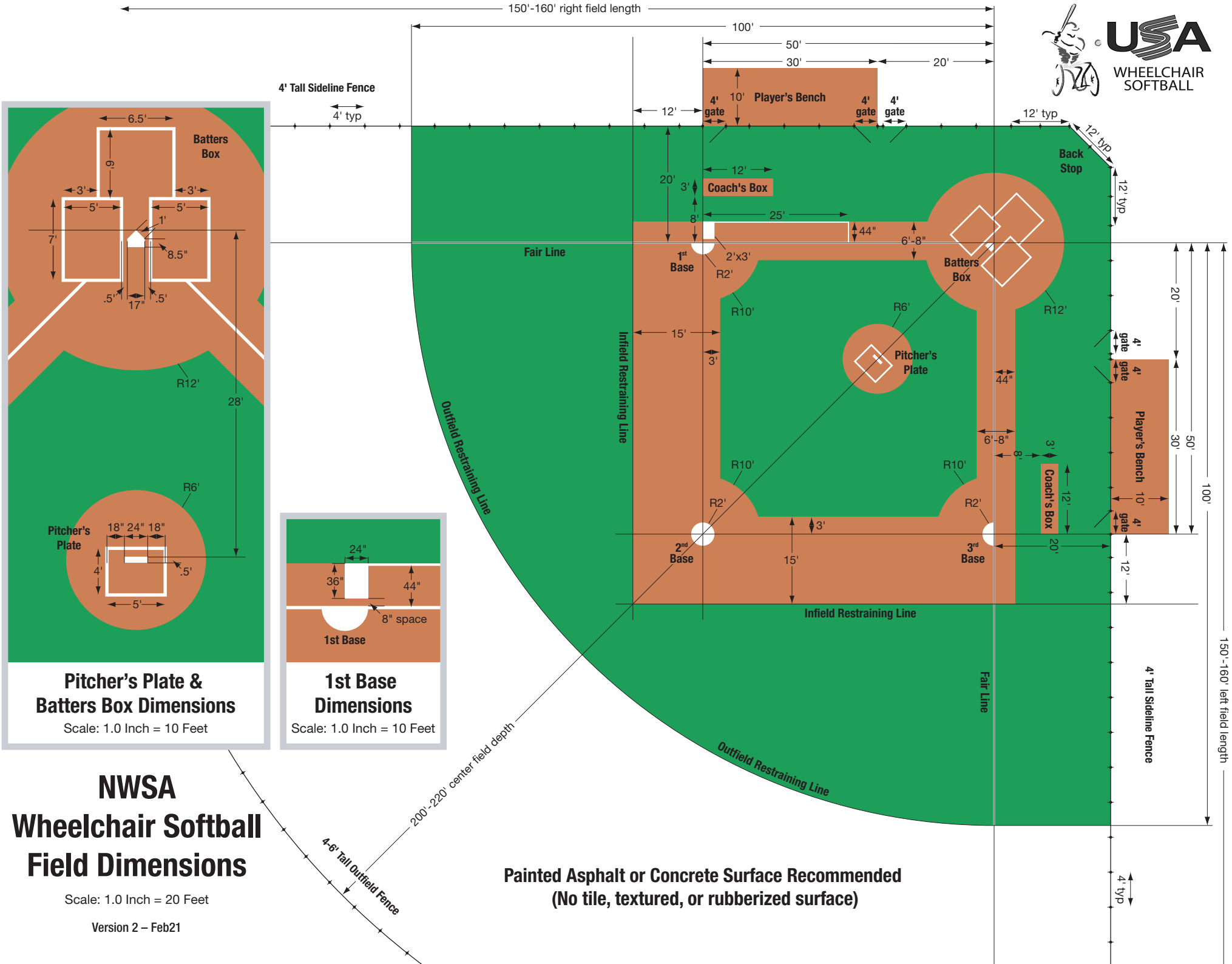

Pitcher's Plate & Batters Box Dimensions

Scale: 1.0 Inch = 10 Feet

1st Base Dimensions

Scale: 1.0 Inch = 10 Feet

NWSA Wheelchair Softball Field Dimensions

Scale: 1.0 Inch = 20 Feet

Version 2 – Feb21

Painted Asphalt or Concrete Surface Recommended
(No tile, textured, or rubberized surface)



Field Maintenance

A Basic Guide for Baseball & Softball Fields of All Levels

This publication is provided by the Baseball Tomorrow Fund, a joint initiative of
Major League Baseball and the Major League Baseball Players Association.

Table of Contents

Preface 3

Chapter I – Field Maintenance 4

Developing a Field Maintenance Plan 4
Suggested Maintenance Equipment 5
How to Mow a Field 9
How to Maintain the Base Paths 11
How to Maintain the Infield Skin 12
How to Maintain the Pitcher's Mound, Home Plate ..... and Bullpen Areas 13

Chapter II – Turf Management 15

Control of Weeds, Pests and Disease 15
Aeration 16
Renovation or Reconstruction 17
Grass Selection 17
Irrigation 18
Fertilization 19

Chapter III – Field Equipment 21

Field Lighting 21
Bases 22
Pitching Rubber 22
Backstop 23
Dugouts 24
Coaches' Boxes 24
Outfield and Baseline Fencing 25
Batter's Eye 25
Warning Track 26
Foul Poles 26
Scoreboards 27
Protective Screens 27
Batting Tunnels 30
Field Signs 30

Chapter IV – Softball Field Maintenance 31

Chapter V – Resources 32

Suggested Field Dimensions 33
Metric Conversion Chart 34
Diagrams of Field Layouts 35
Field Maintenance Checklists 37
Notes 39
Important Contacts 40

Preface

The information in this document is provided as a general reference guide for the maintenance of a baseball or softball field or facility. Professional and international baseball and softball federations and organizations follow similar guidelines pertaining to the dimensions and needs for field development. The information provided in this document should be used only as a resource in the development of a playing field; this information does not represent the only means and methods of field development.

This document is a summary comparison of field establishment processes. These findings may illustrate potential solutions for construction, maintenance and safety for the field of play; however, all areas regarding potential field development may not be identified in this document.

Please note that certain country or regional laws and standards may apply to the construction of athletic fields. Therefore, the guidelines found in this document do not imply that a specific field does not comply with worldwide baseball standards. This document was written in 2006 and updated in 2012.

About the Authors

Murray Cook, President of Brickman Sports Turf and field consultant for Major League Baseball, has over 30 years of experience in the management of professional, collegiate and youth baseball fields worldwide. Mr. Cook, in collaboration with the Baseball Tomorrow Fund (BTF), created this document to provide a resource for baseball field development and field maintenance for organizations involved in all levels of the game.

BTF is designed to promote the growth of youth baseball and softball throughout the world by awarding grants to support field renovation and construction projects, equipment and uniform purchases, coaches training material and other selected program expenses. Since its formation by Major League Baseball and the Major League Baseball Players Association in 1999, BTF has awarded more than $20 million to non-profit and tax-exempt organizations in the U.S., Canada, Latin America, the Caribbean, Europe and Asia. The Baseball Tomorrow Fund also established national programs encouraging equipment donations and field maintenance education across the Major Leagues.

Photo Credits

Photos by the Baseball Tomorrow Fund unless otherwise specified.

Chapter I - Field Maintenance

Developing a Field Maintenance Plan

Providing adequate field maintenance is the key to a safe and quality baseball and softball program and facility. Significant time and resources are required to maintain a field properly. Developing a feasible field maintenance plan is a very important part of any baseball or softball program.

Planning

To develop a field maintenance plan, determining answers to the following questions during the planning stage of a renovation or new construction project is critical:

- What organization will be responsible for maintaining the field?
- What experience, expertise and equipment are available?
- What is the annual field maintenance budget?
- What are the funding sources to sustain the annual budget?
- Will the field be used for other sports or events?
- How many games will be played per day, week, month and year?
- Will the field be a site for tournaments?
- Should the field have synthetic or natural turf?

Staffing

While professional fields are often maintained by a full-time staff, recreational and youth fields often require volunteer help. Providing basic field maintenance checklists to coaches, players and volunteers can ensure proper maintenance of the field. Basic checklists that can be used a starting point can be found in Chapter V. Once a checklist is developed, it can be laminated and posted in each dugout for the reference of all coaches and players.

Budget

The average, annual field maintenance budget for a professional field can range from $50,000-200,000. Similarly, maintenance budgets for recreational and school fields will vary widely. Important budget considerations include: competitive level of use, condition of the field, type of field (i.e. natural or sand-based, type of grass, artificial turf), use of the field for other activities and the availability of field lighting. To develop an annual budget, investigate similar, well-maintained fields in the community and inquire about the maintenance budget, equipment and staffing.

Suggested Maintenance Equipment

Many pieces of equipment are considered necessary to provide adequate field maintenance. This list provides a snap shot of the tools and equipment used by groundskeepers for the maintenance of a field. Descriptions of several key equipment items follow.

Tools and Equipment

- Batter's box, baseline chalker
- Base hole covers
- Batter's box and catcher's box outline frames
- Push broom
- Drags (assorted)
- Edge cutter
- Line marker
- Mound and hitting mats
- Rakes (assorted)
- Shovels
- Small backpack-style sprayer
- String line
- Tamp
- Tarpaulins
- Watering equipment - hoses, spray nozzles, sprinkling (watering) can
- Wheelbarrow







Materials

- Calcined clay - granulated
- Diamond dust - ground calcined clay - for drying wet balls
- Fertilizers
- Herbicides and pesticides
- Line marking material
- Stockpile of mound clay – approx. 2 tons per field
- Stockpile of soils for fill and topdressing – approx. 25 tons per field



Rakes

Each field should have an assortment of rakes. Two each of the following rakes are suggested:

Type of Rake	Suggested Use
Board or Smoothing Board Rake	For smoothing the clays.
Garden Rake	For deeper raking to dry areas and to mix materials into the clays.
Fan or Leaf Rake	To rake clay and soil from the edge of the grass after each game. The best fan rakes are made of plastic. Metal fan rakes are not recommended.

Mound and Home Plate Compactors, Rollers and Tamps

A "hand" tamp (below left and center), is a rectangular piece of iron measuring 6" x 8" x 1 ½" welded to a 4-foot length of 1 ½" pipe. A tamp is used to pack the clays around the pitcher's mound and home plate area. A roller (below, right) is also used on the infield skin (dirt area.)







Cover the bottom of the tamp with a piece of burlap. Tie the ends of the burlap around the handle of the tamp. This will reduce the sticking of moist clays to the tamp.

Drags





A drag is used to smooth the skinned areas of the infield. Various models of drags are available. The three types of drags are shown in the photo, top left (from top to bottom): nail, steel and cocoa mat. Some drags are built from steel mesh. Some drags used for finishing the field are made from cocoa mats. This natural fiber ensures a smooth appearance.

A nail drag is used to scarify, or loosen, the skinned areas of the infield. A variety of nail drags are available from baseball equipment retailers; however, to cut costs, a simple nail drag can be easily constructed (see steps below.)

A drag can be pulled by hand or attached to the back of a vehicle and pulled. Some motorized maintenance vehicles come equipped with dragging implements.

It should be emphasized that the drag should not overlap the turf. If overlapping does occur, a dangerous "lip" of built up dirt will occur at the edge of the grass area. The drag should always be picked up and carried away and never dragged across the grass area.

How to Make a Nail Drag

Materials Needed:
5 – 2 X 4 in. wood boards, each 3 ft. long
5 – 1 X 4 in. wood boards, each 3 ft. long
100 metal spikes
4 eye bolts
20 ft. of nylon rope or link chain
Hand saw, power drill, hammer

Construct a 3 X 3 foot frame using five, 2 X 4 inch wood boards. The corners and the ends of the center board are dovetailed, or slotted together, to allow the frame to lie flat. Staggered holes are drilled (slightly smaller than metal spikes) through the board approximately 1 inch apart. The metal spikes are then driven into the holes. A frame is attached by nailing a 1 X 4 inch board to cover the nail heads to prevent them from coming out. Attaching an eye bolt in each corner of the board, a rope or link chain is attached to drag the spiker in either direction. When more weight is needed to loosen more compacted surfaces, cement blocks or other weights may be placed on top of the drag.

Tarpaulins



Photo by Brickman Sports Turf Division

Tarpaulins, also known as tarps, are used for several purposes including: to protect the field from rain, to retain moisture in the mound and home plate areas when the field is not in use and to protect the turf during practice (photo below.)

In the event of rain, the mound and home plate areas should be covered as quickly as possible. A heavy plastic cover, at least 6 mm in thickness, or nylon cover is suggested. The tarp should be as heavy as possible to keep the tarp on the ground during high winds. The tarp should be large enough to just overlap the grass by approximately 8 inches.

A tarp that covers the entire infield is also available, as shown in the photo above. This tarp is usually made of the same fabric and measures approximately 165 ft. by 165 ft. The folding and rolling of the tarp can be difficult and should be consistent to cover the field as quickly as possible when it is raining.



Kits with smaller tarps to cover the pitcher's mound, home plate area and base positions are also available.

Tarps are used to maintain moisture in the pitcher's mound and home plate areas. **The use of tarps is recommended anytime the field is not in use.**

How to Mow a Field

The mowing of the infield and outfield turf should be completed based on the grass growing heights. A rule of thumb is mow no more than one-third of the blade of grass at any given time. Mowing the grass more than one-third at a time can result in discoloration or "scalping" of the turf, or cutting the turf too low. The following chart provides the suggested heights of common types of grasses:

Type of Grass	Best Height
Bluegrass	1-1 ½ in.
Tall fescue	2 in.
Zoysia	½ - 1 in.
Bermuda	½ - 1 in.

Turf Mowing Maintenance



There are two types of mowers available to cut the field: 1) rotary, and 2) reel mowers. The most common type of mower is a rotary mower. Rotary mowers are used primarily on residential lawns.

Reel mowers are more specialized and are used on higher maintenance facilitates like golf courses and athletic fields. These mowers require additional training to operate properly. Reel mowers are used to provide better quality cutting and allows very low cutting heights. These mowers also have striping capabilities, as shown in the photo above.

The number of times per week the field is mowed will vary depending on the budget, weather and fertility program. Baseball fields are mowed everyday to once a week, depending on the specific needs and standards of the facility.

When mowing a baseball field, keep in mind the following items:

1. It is important to train employees on equipment to reduce the potential for damage and ensure safety.
2. Check oils and lubricate the equipment prior to mowing. Proper equipment maintenance is critical.
3. Always use sharp blades and/or adjust reels prior to every mowing.
4. If the mower makes turns on the skinned areas and warning track, remove any clippings on those areas.

5. Mowing the field when wet is not recommended and should be avoided whenever possible.

There are four traditional patterns to mow a baseball field:



Home Plate to First Base



Home Plate to Third Base

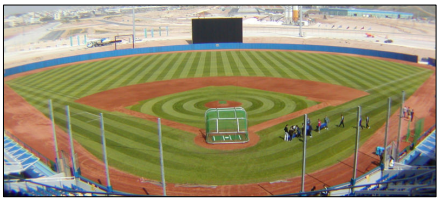

Home Plate to Second Base



Foul Pole to Foul Pole and the Infield Arc

Above photos by Brickman Sports Turf Division

Mow no more than one-third of the blade of grass at any given time.

How to Maintain the Base Paths

It is best to maintain as much of the base paths by hand as possible. Use a drag that is narrower than the width of the base paths. Make sure that the drag does not overlap the grass area to prevent the formation of a "lip" or ridge at the edge of the grass.

Prior to raking the base path, remove any white chalk material with a shovel. This will keep the clay more stable and not cause a hump, or raised area, down in the middle of the baseline.

Rakes should also be used on the base paths. When raking the base paths, do not rake across the path, but go up and down the baseline. Raking across the path can cause a low spot to develop down the middle of the path.



Weeds in the base paths (photo, right) should be removed by hand.

When raking the base paths, **do not rake across the path**. Rake up and down along the length of the path.

📖 **Infield Skin** – the areas on a field composed of clay, such as base paths, pitcher's mound and home plate area. These areas are composed of **infield mix**, also called **infield clay**.

How to Maintain the Infield Skin



The following is a suggested method to properly maintain the skinned areas of the infield:

1. Rake excess dirt from underneath each base area to make it level.
2. Remove any debris, including grass clippings, rocks, weeds, etc.
3. Water the skinned area to allow the infield to be nail dragged. If the skinned area is already moist, this step can be skipped.
4. Nail drag the infield.
5. Add soil conditioner (shown above) and spread with a rake.
6. Screen or drag the infield.
7. Water infield as needed to ensure desired moisture levels.

While maintaining the infield, the drags should be kept at least 6 inches away from the grass so that the loose dirt does not get into the grass thus forming a "lip," or ridge, in the grass edge. A regular rake should be used along the grass edge. Should dirt get into the grass edge, a stiff brush broom should be used to "sweep out" the dirt back onto the skinned area, removing any grass clippings that may be swept onto the skinned area in the process.



Anytime a "lip" begins to develop where the grass and dirt area meet, use a water hose to wash the dirt out of the grass and back onto the skinned area.

To drag the infield skinned area, make a spiralling circle with the drag mat from the infield grass line to the outfield grass, starting at the third base foul line, across the skinned area to the first base foul line. This circular spiral should measure 9-10 ft. in diameter.



Edging the field (photo right) should be done on a bi-weekly basis during the growing season. This will greatly reduce built-up edges. Always use a string line when edging the turf, as shown above.

How to Maintain the Pitcher's Mound, Home Plate and Bullpen Areas



During every game, damage occurs to the pitcher's mound and home plate areas. Regular, proper maintenance will reduce time and money needed to rebuild and renovate these areas. It is also critical to maintain these areas properly to reduce the potential for injury.

The following is a suggested method to properly maintain the pitcher's mound and home plate areas on the field and in the bullpen areas:

1. Sweep debris material from the landing area and table of the mound. This allows the packing clay to be exposed. The landing area is the location on which the pitcher steps to pivot and throw. The table is the area at the top of the mound, measuring 36 inches by 5 feet.
2. Tamp any uneven packing clay level prior to watering.
3. Using a small roller can provide consistency in the mound and home plate areas.
4. Lightly moisten the clay to ensure new packing clay will bind to the existing clay.
5. Scuff-up, or loosen, damaged areas with a shovel.
6. Add new packing clay to the damaged areas.
7. Tamp newly installed packing clay into the ground.
8. Rake down the newly repaired areas.
9. Rake all debris from the pitcher's mound.
10. Add soil conditioner (if needed.)
11. Water the entire pitcher's mound.
12. Allow the mound to dry; however, do not allow the packing clay to dry too much to the point of cracking.
13. Once the pitcher's mound is completely prepared for the game, cover it with a tarp to maintain a proper moisture level. Repeat this process for the home plate, mound and in the bullpen areas.



In some cases, clay bricks are used to establish a firm throwing area. The photo (left) shows the use of moist clay bricks for the home plate area. These bricks are a very acceptable material because they have not been hardened by heat, like bricks used in construction.

Chapter II - Turf Management

Control of Weeds, Pests and Disease

The turf on the field of play must be protected from weeds, pests and disease. There are recommended chemicals that have all been tested. Many new types of chemicals are entering the market regularly and it is important to determine if the geographical area allows specific types of chemicals to be applied.

The products noted in this section are suggestions only. The type of weed control selected should be determined based on the field conditions and level of weed growth.

For broad leaf weeds such as dandelion, ground ivy, plantain and buckhorn, the types of herbicides used across the industry varies. Pre-emergent herbicides are applied in mid-spring, and post-emergent herbicides are applied in the fall. It is suggested that these products should not be used in hot weather because it may cause discoloration.

Pre-emergent herbicides have been effective for grassy weed control such as crabgrass. Treflan, Daethal, Bandane, and Zytron are pre-emergent herbicides.

For control of different types of cut worms and beetles, turf managers have used products such as Heptachlor, Chlordane, Adrin, and Malathion. Each one is different and the exact material will be recommended by the testing lab chosen as a source to determine fertilization needs. All products should be watered in immediately after application. Follow the manufacturer's label of the product closely.

It is important to remember that some bugs are our "friends" when it comes to growing healthy turf. Earthworms and beetles aerate the soil and create organic matter. Bugs are beneficial in many areas of our world; however, on a professional level baseball field, an infestation of bugs can cause slight undulations in the finish grade.

Environmentally-safe methods of weed control, such as pulling weeds by hand, should be considered whenever possible. If weed control products with chemicals are used, appropriate measures regarding the use of fields should be established to ensure safety.

Aeration

High-use areas on a field require aeration. To aerate is to provide ventilation, or expose air, into the soil. The greater the use of the field (or specific area of the field) the more aeration is needed.

To aerate the field, a machine is required to remove small cores of the turf. Aerating machines are sometimes mechanical devices pulled behind a cart or vehicle. The mechanical, self-propelled type of aerating machine is highly preferred.

Aerate **at least 2-3 times per year**.

There are several types of aeration. The type selected is based on the time of season and the specific issues to be addressed with the soil. The types of aeration include: hollow tine aeration, solid tine, open tine, slicing tines, water jet, and event deep tine. A tine is a spike: the pointed part of the aeration machine that is driven into the soil or turf. Some aeration machines mechanically drive the tines into the ground. Other aeration machines pull the tines across the field, while the tines penetrate the soil based on the weight of the machine. Most turf managers prefer the mechanical approach. The mechanical machines provide a more even distribution of aeration allowing the depth of the tines to remain constant.

On average, natural soil fields require more aeration than sand-based fields due to compaction issues. The amount of aeration depends on the use of the field. It is recommended to aerate at least 2-3 times per year.



Photo by Brickman Sports Turf Division

After the field is aerated, it is also recommended to top dress the field. Topdressing is applied with a machine pulled behind a cart, as shown in the photo (left.)

On Bermuda turf, the field should be verticut to remove the thatch layers. The verticut process uses a power machine with vertical blades to remove the thatch and allows the turf to grow properly. This procedure should be completed at least once per year. On Bluegrass or cool season grasses, the process of verticutting or de-thatching is required; however, all efforts should be made to perform this procedure in the fall. In addition, good judgment must be used to determine the depth of the dethatcher so that the root structure is not removed or damaged in the process. Following the removal of the thatch on Bluegrass turf in the fall, the field should be over-seeded and top dressed.

Renovation vs. Reconstruction



Photo by Brickman Sports Turf Division

When determining whether to renovate or reconstruct a field, the rule of thumb is as follows: "Reconstruct if the turf has more than 50% weeds with a large proportion of crabgrass or, if in the north, poa trivialis." In other words, renovate the field if it has less than 50% weed infestation. However, this decision also depends on the type of weeds present and location of the field.

If total reconstruction is chosen, fumigation of the field to kill off the weeds properly may be necessary. If only a slight renovation is chosen, plan to aerate, top dress with sand, fertilize, overseed or sod and water adequately to obtain proper growth. Renovation may be necessary in small sections. Be sure to match the seed or sod to existing materials to avoid a "patch" look in the spring when the turf grows in. In most areas, the best time for either renovation or reconstruction is autumn.

Grass Selection

Selecting the type of turf needed is partially determined by geographic location. Fields located in northern U.S. use cool season turfs such as Bluegrass, fescues and rye grasses. In the southern U.S., Bermuda-type turf and Zoyzias grasses are commonly used. In Europe, Pos type turfs are used. Determining the best grass for the area is as simple calling the local agricultural or agronomic school. Thousands of varieties of grasses are available, but all grasses can be categorized in the groups noted above. No one type of grass is perfect, but there are some excellent grasses adapted to fit nearly all conditions.

The **best time to renovate or reconstruct** a field is autumn. Call the local agricultural or agronomic school to determine the best type of grass for the area.

Irrigation





All turf will need water, or irrigation, for establishment, growth and repair. If nature does not provide rain in sufficient amounts, the turf manager must provide the water. The ability to have a consistent water supply is critical to field maintenance. **Installing an automatic irrigation system should be one of the highest priorities in any field renovation or construction.** Watering thoroughly to allow the water to soak deeply is required. Deep watering encourages deep root growth. Frequent shallow watering encourages shallow surface roots, compactions, crabgrass and other weeds.

Some engineered soils can hold up to 1,000 gallons of available water per 1,000 square feet to a depth of 6 inches. Under severe drought conditions, the turf may lose a quarter to a third of an inch of water per day.

It is possible to over water a field. Grassy weeds such as nut sedge may appear. Over watering also limits the oxygen supply to the turf and may cause yellowing which can create turf that is susceptible to disease.

A soil probe should be used to check the depth of moisture saturation. A soil probe can be purchased from local lawn and garden stores. It is a very valuable tool used to pull small cores of soil from your field to check root depth and moisture. If the penetration is slow, aerating may be necessary because the soil is compacted. Frequent use of the aeration equipment will keep the soil open and provide the necessary porosity, or porous quality of the soil.

In addition to the maintenance of the infield and outfield turf, **irrigation is also necessary to properly maintain the infield skin, pitcher's mound and home plate area**. The application of water is essential to effectively work with infield mix and mound clays.

Deep watering encourages healthy turf.
Frequent shallow watering encourages crabgrass and weeds.

Fertilization



Photo by Brickman Sports Turf Division

Turf must have the following nutrients in order to grow and heal after wear and tear: nitrogen, phosphorous and potassium. **The formula for the accurate amounts of these products should be determined by having a soil analysis completed by an agronomic agency specializing in the evaluation of athletic turf grasses.** All athletic turf should have an application of a complete balanced fertilizer throughout the year.

The chart below provides several types of balanced formulas, depending on local soil conditions.

Nitrogen %	Phosphorous (Phosphate) %	Potassium (Potash) %
10	10	10
15	5	15
10	5	5
8	6	4

Nitrogen is a main staple for leaf growth and is supplied in either organic or inorganic form. The organic type is also available in sewage sludge, cottonseed meal and urea form. The inorganic is available as sulphate of ammonium, urea or ammonium nitrate. Sport turf managers use both organic and inorganic blends. This produces a more uniform and steady grass growth.

A general rule of thumb is to provide ½ to ¾ pound of nitrogen (actual) per 1,000 square ft. during each month of the growing season. In most sports field environments it is better to feed lightly and frequently. A consistent supply of nitrogen will provide for steady growth and recovery from injury and wear. In contrast, too heavy of feedings may create a tender, even slippery turf that has a lower tolerance for wear. Again, perform soil and tissue tests regularly, approximately 3 to 4 times per year. Bermuda and Zoysia grasses should be fed regularly during the long summer growing season.

Soils in the cool temperature areas, which are northern hemisphere, require different fertilizers than those in the south. The area separating the two hemispheres is called the transition zone. The transition zone is the area located between cool season grasses and warm season grasses. Growing turf in the transition zone is very difficult as neither variety of grass is ideal. Therefore, consult a local agricultural/agronomic school for the appropriate types of fertilizers for the area.

Using a cyclone, walk-behind fertilizer spreader is preferred by most sport turf managers. Determine if the grass is dry before applying a fertilizer. It is considered a good practice to aerate the area before applying fertilizers. Afterwards, the soil should be dragged and watered to insure the chemicals get to the roots. Under normal conditions, ground limestone should only be needed every other year.

Healthy turf needs nutrients such as nitrogen, phosphorous and potassium. For sports fields, it is better to **fertilize lightly and frequently**.

Chapter III - Field Equipment

The following equipment and field elements are necessary to meet the general requirements of the rules of baseball and the minimum standards used by the International Baseball Federation. Numerous variations of equipment are used, but this section may assist the understanding of the level of detail needed at the field to host a tournament or higher level of competitive play.

Field Lighting



When considering field lighting, remember that the addition of field lighting will result in greater usage of the field and more time and funding required for on-going field maintenance and renovations. However, if field usage is managed properly, with time allowed during the season to rest the field, field lighting can be a useful addition to the field and the programs that utilize the field. If funding allows, the installation of field lights (or the required electrical infrastructure for the future installation of field lights) during the initial field construction stage is highly recommended.

When planning the installation or replacement of field lighting, it is important to understand that each level of play requires different levels of lighting requirements; therefore, several factors should be considered. These factors include the size of the facility, the durability of the lighting system, the age of the facility, the requirements of the applicable governing body (i.e. NCAA, IBAF, Little League, Inc., etc.), the potential for televised games or international play. It is important that these issues are discussed with a field lighting professional during the planning process.

To demonstrate the differences in lighting guidelines based on level of play, the following chart provides general lighting guidelines for various levels of fields.

General Lighting Guidelines Based on Field Level

Field Level	Horizontal Illumination Foot-Candles (Lumens)*	
	Infield	**Outfield**
International/Olympics	150 (1,500)	100 (1,000)
Minor Leagues – AAA and AA	100 (1,000)	70 (700)
Minor Leagues – A and Rookie	70 (700)	50 (500)
College – non-televised	70 (700)	50 (500)
College – televised	100 (1,000)	70 (700)
High School, Youth (competitive)	50 (500)	30 (300)
Recreational	30 (300)	20 (200)

** Please note: In the U.S., lights are measured by the amount of Foot Candles (FC.) In Europe, lights are measured in Lumens (Lux.)*

Bases



Each field will need three bases, three base plugs and a clean-out tool to clear any soils that may enter the base anchors. First, second and third bases are 15 inches square, and cannot be taller than 3 inches.

The "Hollywood-Style" base (photo above) is the accepted base for baseball fields throughout the U.S. This style of base is tough, durable, convenient to handle and can be permanently located on the field. There is no slipping of the base, which makes it very safe. The base can be cleaned and painted prior to each event to provide a professional appearance to the field. This type of base does not require spikes or straps. Strap down bases have been ruled as unsafe in some tournaments.

Pitching Rubber



The pitching rubber, also referred to as a pitcher's plate, is available in several styles: four-sided (left), spiked, moveable and step-down. The official size of the pitching rubber is 26"x 6."

Backstop



The backstop is constructed with chain link fencing or with nets and cables. The height of the backstop can range between 10-20 feet and is determined by the age groups served and level of competition played at the field. Selecting the proper height and width of the backstop is important to provide adequate player and spectator safety.

The backstop should be located 60 feet from home plate on regulation baseball fields and 25-35 feet on youth baseball fields.

Backstop netting, which is preferred for higher level and competitive fields, is suspend between the dugouts and normally covers an area directly behind home plate that is 80 feet wide and 24 feet high.

Consult an architect to design a backstop system that bests suits the needs of the facility.



Dugouts







Dugouts are used to protect the players from inclement weather and the sun and to provide an area where they can rest while the opposing team is in the field. Typical dugout structures should be designed to hold a roster of 20 players plus coaches. This would require a dugout to be at least 60 feet long.

Some dugouts are totally enclosed while some may have a low fence in front of the dugout, which is highly recommended. This will help to protect the players in the dugout from foul balls and thrown bats. Some dugouts are sunken into the ground by 2-4 steps. This is not required but does provide a more traditional setting. The dugout can be built at field level. The floor of the dugout should be covered with some type of rubber material to provide safe footing to players wearing metal cleats.

The installation of bat and helmet racks in the dugout is also helpful to extend the life of the equipment and increase player safety.

Coaches' Boxes



There are two coaches' boxes on the field: one for third base and one for first base. The coaches' boxes are marked with a white line. It is better to paint this line than use white chalk or lime. The first and third base coaches stand in these areas. The box is located 15 feet from the foul line in foul territory. The box is 20 feet long and the sides of the box are 10 feet long. The box is sometimes closed in the back, toward the baseline fencing.

Outfield and Baseline Fencing





Chain link fencing is often used to enclose the "perimeter of the field of play" on youth, school and recreational fields. For higher levels of play, the outfield fencing may be made from metal sheets or wood and is padded with 3-inch thick foam. This provides the player with a sense of security allowing him or her to pursue difficult plays without the threat of being injured.

Baseline and outfield fencing is recommended. A field that is completely enclosed by fencing also facilitates on-going maintenance by discouraging or limiting the use of the field for activities that may be harmful to the turf.

The average height of the perimeter fencing is 8 feet; however, 4-6 foot fencing is often used on recreational fields. The age group served by the field, player safety and field security should be considered when determining the appropriate height of the outfield and baseline fencing.

Protective fence cap (photos above) is also installed on chain link fencing for player safety. This product is made of plastic and is attached to the top of the fence. **All unattached or curled chain link fabric should be reattached to the rails or replaced promptly to ensure player safety.** A bottom rail on chain link fencing is recommended to secure the fabric of the fencing.

Other elements related to the outfield fence include the batter's eye, the warning track and foul poles.

Batter's Eye



One of the key components of the outfield is the size and location of the batter's eye. The batter's eye is what the batter sees behind the pitcher. This area must be one consistent, dark color, preferably black, and is

normally 60 feet wide and 30 feet high. It is generally a metal structure covered in wind screen material. The wind screen material is made with a solid mesh-like material which allows some air to flow through it.

Warning Track

The **warning track should extend around the entire field** to provide player safety and to reduce wear of turf in front of the dugouts and around the home plate area.





The warning track can be made from a variety of materials. It can be made of a rubberised material and poured onto asphalt or constructed using red crushed brick material and or shell rock. The goal is to ensure the warning track material is different in color and texture than the playing field surface. It is also important that the warning track material is a stone or aggregate material that is consistent in size and meets certain specifications. For example, stone used in warning track material should be no larger than 3/8th of an inch, as shown in the photo (left).

The depth of the warning track material and the method it is applied will vary depending upon the type of material. On average, approximately 4 inches of material is required over a stable sub base. The warning track is normally 15 feet deep in front of all obstructions; however, consult the leagues and associations that will utilize the field regarding rules and regulations. For instance, the outfield warning track on an Olympic field is 20 feet wide as opposed to a Major League field, which requires a width of 15 feet.

Foul Poles



Foul poles indicate the foul territory of the outfield field. However, despite the name, a ball hitting a foul pole is considered fair. These poles are normally 30 feet high and have 2 foot wing attached to the fair side of the pole. The proper location of each foul pole is identified by using a transit to find a perfect 90 degree angle with the apex of home plate. Each foul pole will be inside this angle, in the left and right field corners of the field. Poles are located off the field of play and behind the outfield fence. In some cases, the foul poles are a part of the outfield fencing and are padded for player safety.

Scoreboards



Scoreboards are available in many different styles with a variety of functions. Before purchasing a scoreboard, consider the following questions:

1. What is the budget to purchase a scoreboard; what will be the budget for on-going operation and maintenance?
2. What are the field dimensions; what size scoreboard is needed for adequate visibility?
3. What levels of games are played at the field (i.e. recreational, competitive, youth, high school, tournaments)?
4. What is the power/utility availability and requirements for the scoreboard?
5. Will the scoreboard be used for sponsorship opportunities, advertisements?
6. Who will operate the scoreboard?
7. Should the scoreboard be permanently installed or portable (for use at multiple fields)?
8. Where will a portable scoreboard be stored, secured?
9. What is required to install the scoreboard; who will complete the installation?

Protective Screens

The purpose of protection screens is to provide protection to players during training and pre-game practices. Protective screens are not used during the game. The following protective screens are recommended:

1. Pitching protection screens – also known as L-Screens – 1 per field
2. First base protection screen – 1 per field
3. second base protection screen – 1 per field
4. ball shagger screen – 1 per field
5. For batting tunnels, one L-screen per tunnel is recommended.

Pitcher's Protection Screen

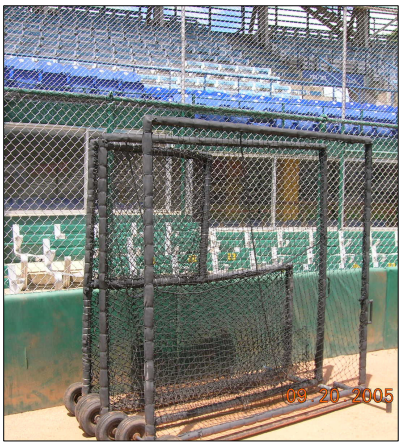

Photo by Brickman Sports Turf Division

During batting practice, the pitcher is normally throwing from a shortened distance (10-15 feet shorter than regulation, in front of the pitchers mound.) This places the batting practice pitcher in great danger as his reaction time to protect himself is greatly reduced. Therefore, a pitcher's protection screen is highly recommended.

The size of this screen varies for a regulation screen with 2-inch aluminium tubing designed in an "L" shaped is recommended. The recommended dimensions are 8 feet wide with an overall height of 8 feet with the lower wing 40 inches high. The screen should be covered with a strong baseball batting cage-type netting made from nylon if possible. Metal fencing can be used; however, this type is not preferred due to the damage caused by batted balls.

First Base Screen



First base screens, like the one shown on the left, also should have framework of either 1-inch pipe or 2-inch aluminium tubing. The recommended dimensions are 8 feet wide with a height of 8 feet. Again, the screen should be covered with a strong baseball batting cage-type netting made from nylon if possible. Braces can be welded (attached) to the bottom pipe to help the stability of the screen. Wheels can be attached to allow for easier handling.

Second Base Screen and Shagger Screen

Second base and shagger screens are identical and are normally 12 feet wide and 8 feet tall. Construction is similar to the first base screen. It is used to provide protection to the second baseman and shortstop as they practice double plays. The other screen serves a similar purpose as it is used to protect the "ball shagger," who is located behind the second base area during practice.

Portable Batting Cages





A portable batting cage structure is normally 10 feet high, 20 feet wide and 20 feet deep. It is igloo-shaped (or arched) and is constructed with 2-inch aluminium tubing covered with foam padding for safety of the players inside the batting cage. The structure is usually built with three wheels. One wheel swivels to direct the cage and the other two are stationary. The cage is rolled and positioned very close to the field turf with no more that 3 inches between the lower rail and the grass; therefore, moving it across the field requires a smooth access on and off the field of play.

Batting Tunnels





Batting tunnels, or batting cages, are often used when the field is too wet for practice or to provide additional hitting practice. The average tunnel is 18 feet wide and 80 feet long and 10 feet high. Some batting cages are suspended by cables; although, many batting cage structures are supported with aluminium tubing. If using aluminium tubing, the tubing should be covered with foam padding for safety. The netting on batting tunnels is similar to that used on portable batting cages. The cage netting behind the batter requires a much heavier nylon or a pad to stop the thrown or fouled ball during practice sessions.

Field Signs

Field signs are used for many purposes: to provide the field dimensions (distance to the outfield), to provide sponsorship (fundraising) opportunities, etc. However, field signs can also help encourage good field maintenance practices by all coaches, players and the public.









Chapter IV – Softball Field Maintenance



The maintenance of softball fields is very similar to baseball fields. Although similar, there are several issues regarding the maintenance procedures of infields, mounds and plate areas that vary.

Photo by Brickman Sports Turf Division

1. A softball field is predominately flat with a 1% grade, falling from the center of the mound. Due to the large area of clay, the infields require extensive dragging and shaping to reduce low spots.

2. The pitcher's mound is flat and requires similar maintenance as a baseball mound such as watering the clays and packing the mound after use.

3. The home plate area is also treated the same as on a baseball field, as softball and baseball players dig similar holes during the course of play. Follow the same maintenance procedure for the home plate, mound and infield areas.

4. The field layout is different for softball fields for varying ages. Please see Chapter V for suggested field dimensions.

5. The depth of a warning track on a softball field is normally 10 feet.

6. Due to the large size of the softball infield, irrigation systems are installed to irrigate the infield clays. An automatic irrigation system will allow more time for the ground crew to focus on the mound, home plate and dragging requirements.

Chapter V - Resources



In this chapter, the following information is provided for reference:

- Suggested Field Dimensions
- Diagrams of Field Layouts
- Metric Conversion Chart
- Daily and Annual Field Maintenance Checklists

  Checklists can be used as a helpful guide to develop a proper maintenance routine, especially when several persons or organizations are involved in the maintenance of the field. These checklists can be modified to meet the specific needs of each field. Post the checklists in each dugout for reference by the grounds keeper, coaches and players.

Suggested Field Dimensions

Baseball

Age Group	Left Field	Center Field	Right Field	Pitching Distance	Distance Between Bases
Ages 17 and older	321 ft.	400 ft.	321ft.	60 ft. 6 in.	90 ft.
Ages 15-16	280 ft.	350 ft.	280 ft.	60 ft. 6 in.	90 ft.
Ages 13-14	250 ft.	315 ft.	250 ft.	54 ft.	80 ft.
Ages 11-12	200 ft.	200 ft.	200 ft.	46 ft.	60 ft.

Girls' Fastpitch Softball

Age Group	Home Run Fence	Pitching Distance	Distance Between Bases
High School (NFSHSA)	185-235 ft.	40 ft.	60 ft.
Ages 15-19 (ASA)	200-225 ft.	40 ft.	60 ft.
Ages 14 and under (ASA)	175-200 ft.	40 ft.	60 ft.
12 and under (ASA)	175-200 ft.	35 ft.	60 ft.
10 and under (ASA)	150-175 ft.	35 ft.	55 ft.

Suggested Space Requirements

Field Dimension	Age Group	Space Requirement
Regulation baseball (90 ft. bases)	High school level and 16 year olds and up	110,000 sq. ft.
Regulation baseball (90 ft. bases)	13-15 year olds	90,000 sq. ft.
Youth baseball (60 ft. bases)	12 and under	60,000 sq. ft.
Fastpitch Softball (60 ft. bases)	12 and under to 19	60,000 sq. ft.

Metric Conversion Chart

LENGTH				
Symbol	**When You Know**	**Multiply by**	**To Find**	**Symbol**
in	inches	2.54	centimeters	cm
ft	feet	30.48	centimeters	cm
ft	feet	0.3048	meters	m
yd	yards	0.9144	meters	m
mi	miles	1.6097	kilometers	km

AREA				
Symbol	**When You Know**	**Multiply by**	**To Find**	**Symbol**
sq. in. (in^2)	square inches	6.45	square centimeters	cm^2
sq. ft. (ft^2)	square feet	0.093	square meters	m^2
sq. yd. (yd^2)	square yards	0.836	square meters	m^2
	acres	0.405	hectares	ha

WEIGHT (MASS)				
Symbol	**When You Know**	**Multiply by**	**To Find**	**Symbol**
oz	ounces	28	grams	g
lb	pounds	0.45	kilograms	kg

Diagrams of Field Layouts

(Diagrams from www.markersinc.com)

Regulation Baseball Field

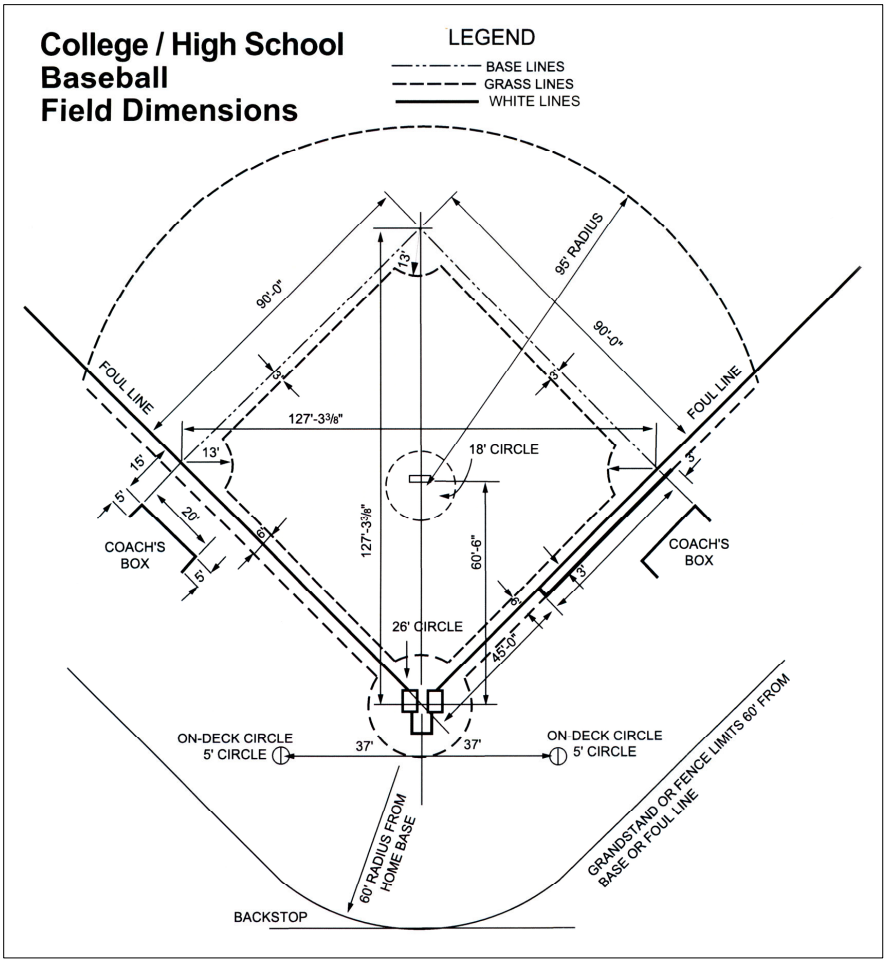

Diagrams of Field Layouts

(Diagrams from www.markersinc.com)

Youth Baseball Field

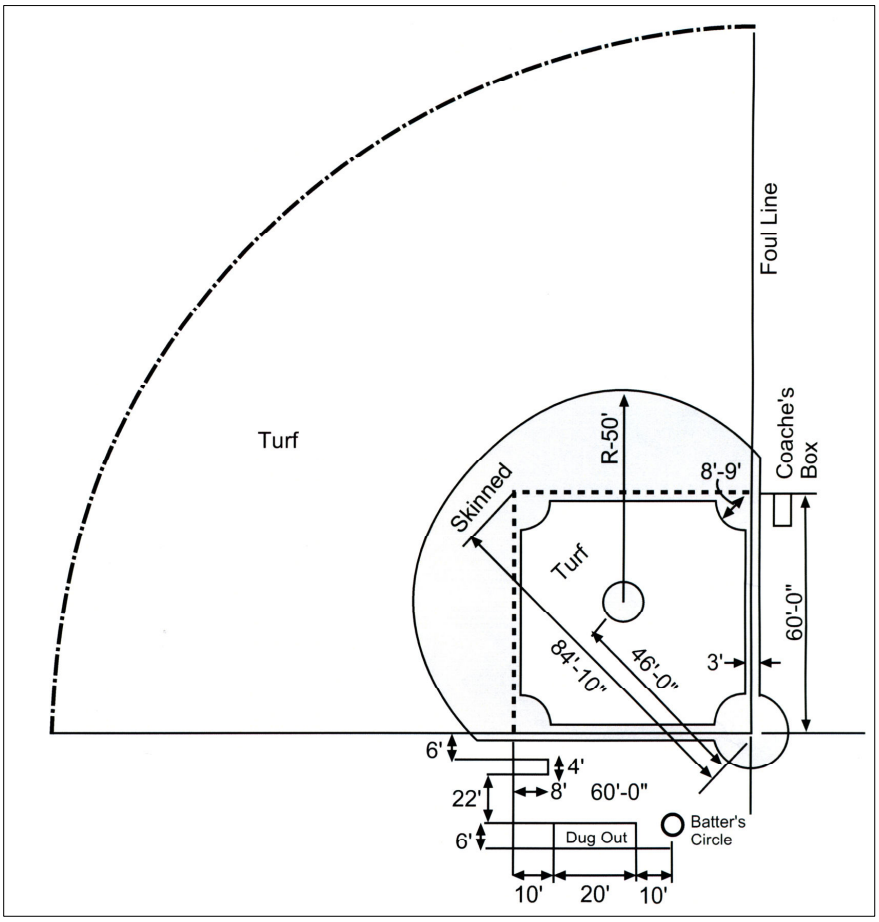

Baseball Pitcher's Mound

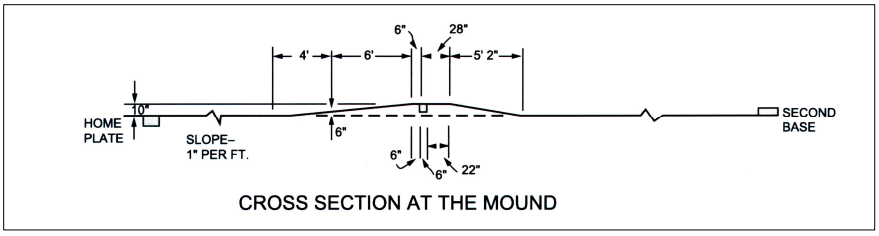

Daily Field Maintenance Checklist

Daily Routine before Practice:	✓
Remove tarps	
Water skinned areas and baselines	
Install the bases	
Erect safety screens for pitcher, first base and second base	
Place the batting cage at home plate	

Daily Routine after Practice and Games:	✓
Remove the bases and cover the base anchor sleeves	
Drag the skinned areas and baselines	
Recondition the mound, home plate area, cover with tarps	
Recondition the bull pen mound and home plate area	
Replace and tamp any loose divots in turf areas	
Dispose of trash in and around field and bleacher areas	

Day of Game Routine:	✓
Remove tarpaulins	
Mow the grass	
Scarify the skinned areas with a spiker	
Drag the skinned areas smooth	
Water the infield area	
Sweep and clean dugouts	
Set the chalk lines and mark officially	
Place the batting practice pitcher's mat on the mound	
Place the safety screens: pitcher, first base and second base	
Paint or wash bases, pitching plate and home plate	
Prepare the bullpens	
Hang flags on the foul line poles and flagpole	
Check the operation of the field lights and scoreboard	
Prepare the press box and operation of the p.a. system	
Check the operation of the electrical equipment in the concession stand	
Clean and prepare the locker rooms and umpire rooms	
Dispose of trash found in and around field and bleacher areas	

Annual Field Maintenance Checklist

Spring Routine:	✓
Perform soil and tissue tests	
Aerate the field	
Top dress the field	
Fertilize the field	
Apply pre-emergent herbicides	
Clean, paint or repair dugouts, fencing, bleacher areas and field signs	
Reattach or replace lose or curled chain link fabric	

Fall Routine:	✓
Perform soil and tissue tests	
Aerate the field	
De-thatch or verticut turf	
Over-seed and top dress the field	
Fertilize the field	
Apply post-emergent herbicides	
Add ground limestone every other year	
Complete renovations or reconstruction projects if needed	

Winter Routine:	✓
Review field maintenance plan and budget	
Review upcoming field use schedule	
Clean, repair or replace field maintenance equipment	
Plan future renovations or reconstruction projects to be completed next fall	

Notes

Important Contacts

Name: _____

Company: _____

Product/Service:_____

Office: _____

Cell:_____

E-mail:_____

Notes: _____

_____

Name: _____

Company: _____

Product/Service:_____

Office: _____

Cell:_____

E-mail:_____

Notes: _____

_____

Name: _____

Company: _____

Product/Service:_____

Office: _____

Cell:_____

E-mail:_____

Notes: _____

_____

SECTION TABLE OF CONTENTS

DIVISION 02 - SITE WORK

SECTION 02220

DEMOLITION

PART 1 GENERAL

1.1 REFERENCES
1.2 GENERAL REQUIREMENTS
1.3 SUBMITTALS
1.4 DUST CONTROL
1.5 PROTECTION
1.5.1 Protection of Personnel
1.5.2 Protection of Structures
1.5.3 Protection of Existing Property
1.5.4 Protection From the Weather
1.5.5 Protection of Trees
1.5.6 Environmental Protection
1.6 BURNING
1.7 USE OF EXPLOSIVES
1.8 AVAILABILITY OF WORK AREAS

PART 2 PRODUCTS (Not Applicable)

PART 3 EXECUTION

3.1 EXISTING STRUCTURES
3.2 UTILITIES
3.3 FILLING
3.4 DISPOSITION OF MATERIAL
3.4.1 Salvageable Items and Material
3.4.1.1 Material Salvaged for the Contractor
3.4.1.2 Items Salvaged for the Government
3.4.1.3 Items Salvaged for the Using Service
3.4.1.4 Historical Items
3.4.2 Unsalvageable Material
3.5 CLEAN UP
3.6 PAVEMENTS

-- End of Section Table of Contents --

SECTION 02220

DEMOLITION

PART 1 GENERAL

1.1 REFERENCES

The publications listed below form a part of this specification to the extent referenced. The publications are referred to in the text by basic designation only.

ENGINEERING MANUALS (EM)

1.2 GENERAL REQUIREMENTS

The work includes demolition, salvage of identified items and materials, and removal of resulting rubbish and debris. Rubbish and debris shall be removed from Government property daily, unless otherwise directed, to avoid accumulation at the demolition site. Materials that cannot be removed daily shall be stored in areas specified by the Contracting Officer. In the interest of occupational safety and health, the work shall be performed in accordance with EM 385-1-1, Section 23, Demolition, and other applicable Sections. In the interest of conservation, salvage shall be pursued to the maximum extent possible; salvaged items and materials shall be disposed of as specified.

1.3 SUBMITTALS

Government approval is required for submittals with a "G" designation; submittals not having a "G" designation are for information only. When used, a designation following the "G" designation identifies the office that will review the submittal for the Government. The following shall be submitted in accordance with Section 01330 SUBMITTAL PROCEDURES:

SD-03 Product Data Work

Plan; G, [_____]

The procedures proposed for the accomplishment of the work. The procedures shall provide for safe conduct of the work, including procedures and methods to provide necessary supports, lateral bracing and shoring when required, careful removal and disposition of materials specified to be salvaged, protection of property

which is to remain undisturbed, coordination with other work in progress, and timely disconnection of utility services. The procedures shall include a detailed description of the methods and equipment to be used for each operation, and the sequence of operations in accordance with EM 385-1-1.

1.4 DUST CONTROL

The amount of dust resulting from demolition shall be controlled to prevent the spread of dust to occupied portions of the construction site and to avoid creation of a nuisance in the surrounding area. Use of water will not be permitted when it will result in, or create, hazardous or objectionable conditions such as ice, flooding and pollution.

1.5 PROTECTION

1.5.1 Protection of Personnel

During the demolition work the Contractor shall continuously evaluate the condition of the structure being demolished and take immediate action to protect all personnel working in and around the demolition site. No area, section, or component of floors, roofs, walls, columns, pilasters, or other structural element will be allowed to be left standing without sufficient bracing, shoring, or lateral support to prevent collapse or failure while workmen remove debris or perform other work in the immediate area.

1.5.2 Protection of Structures

Floors, roofs, walls, columns, pilasters, and other structural components that are designed and constructed to stand without lateral support or shoring, and are determined to be in stable condition, shall remain standing without additional bracing, shoring, of lateral support until demolished, unless directed otherwise by the Contracting Officer. The Contractor shall ensure that no elements determined to be unstable are left unsupported and shall be responsible for placing and securing bracing, shoring, or lateral supports as may be required as a result of any cutting, removal, or demolition work performed under this contract.

1.5.3 Protection of Existing Property

Before beginning any demolition work, the Contractor shall survey the site and examine the drawings and specifications to determine the extent of the work. The Contractor shall take necessary precautions to avoid damage to existing items to remain in place, to be reused, or to remain the property of the Government; any damaged items shall be repaired or replaced as approved by the Contracting Officer. The Contractor shall coordinate the work of this section with all other work and shall construct and maintain shoring, bracing, and supports as required. The Contractor shall ensure that structural elements are not overloaded and shall be responsible for increasing structural supports or adding new supports as may be required as a result of any cutting, removal, or demolition work performed under this contract.

1.5.4 Protection From the Weather

The interior of buildings to remain; salvageable materials and equipment shall be protected from the weather at all times.

1.5.5 Protection of Trees

Trees within the project site which might be damaged during demolition, and which are indicated to be left in place, shall be protected by a 1.8 m (6 foot) 6 foot high fence. The fence shall be securely erected a minimum of 1.5 m 5 feet from the trunk of individual trees or follow the outer perimeter of branches or clumps of trees. Any tree designated to remain that is damaged during the work under this contract shall be replaced in kind or as approved by the Contracting Officer.

1.5.6 Environmental Protection

The work shall comply with the requirements of Section [01410 ENVIRONMENT PROTECTION] [_____].

1.6 BURNING

The use of burning at the project site for the disposal of refuse and debris [will not be permitted] [will be permitted in the area located [_____] and between the hours of [_____] and [_____]].

1.7 USE OF EXPLOSIVES

Use of explosives [will] [will not] be permitted.

1.8 AVAILABILITY OF WORK AREAS

Areas in which the work is to be accomplished will be available in accordance with the following schedule:

Area	Date
[_____]	[_____]

PART 2 PRODUCTS (Not Applicable)

PART 3 EXECUTION

3.1 EXISTING STRUCTURES

Existing structures indicated shall be removed [to grade] [to top of foundation walls] [to [_____] meters feet below grade]. Interior walls, other than retaining walls and partitions, shall be removed to [_____] meters feet below grade or to top of concrete slab on ground. Basement slabs shall be broken up to permit drainage. Sidewalks, curbs, gutters and street light bases shall be removed as indicated.

3.2 UTILITIES

Disconnection of utility services, with related meters and equipment, are specified in Section [_____]. Existing utilities shall be removed as indicated. When utility lines are encountered that are not indicated on the drawings, the Contracting Officer shall be notified prior to further work in that area.

3.3 FILLING

Holes, open basements and other hazardous openings shall be filled in accordance with Section [_____] [as follows: [_____]].

3.4 DISPOSITION OF MATERIAL

Title to material and equipment to be demolished, except Government salvage and historical items, is vested in the Contractor upon receipt of notice to proceed. The Government will not be responsible for the condition, loss or damage to such property after notice to proceed.

3.4.1 Salvageable Items and Material

Contractor shall salvage items and material to the maximum extent possible.

3.4.1.1 Material Salvaged for the Contractor

Material salvaged for the Contractor shall be stored as approved by the Contracting Officer and shall be removed from Government property before completion of the contract. Material salvaged for the Contractor shall not be sold on the site.

3.4.1.2 Items Salvaged for the Government

Salvaged items to remain the property of the Government shall be removed in a manner to prevent damage, and packed or crated to protect the items from damage while in storage or during shipment. Items damaged during removal or storage shall be repaired or replaced to match existing items. Containers shall be properly identified as to contents. The following items reserved as property of the Government shall be delivered to the areas designated: [____].

3.4.1.3 Items Salvaged for the Using Service

The following items reserved as property of the using service shall be removed prior to commencement of work under this contract: [_____].

3.4.1.4 Historical Items

Historical items shall be removed in a manner to prevent damage. The following historical items shall be delivered to the Government for disposition: Corner stones, contents of corner stones, and document boxes wherever located on the site.

3.4.2 Unsalvageable Material

Concrete, masonry, and other noncombustible material, except concrete permitted to remain in place, shall be disposed of in the disposal area located [_____]. The fill in the disposal area shall remain below elevation [_____] and after disposal is completed, the disposal area shall be uniformly graded to drain. Combustible material shall be disposed of [in the sanitary fill area located [_____]] [off the site] [by burning].

3.5 CLEAN UP

Debris and rubbish shall be removed from basement and similar excavations. Debris shall be removed and transported in a manner that prevents spillage on streets or adjacent areas. Local regulations regarding hauling and disposal shall apply.

3.6 PAVEMENTS

Existing pavements designated for removal shall be saw cut and removed in accordance with the details shown on the drawings and to the limits and [depths indicated on the drawings] [to a depth of [_____] mm inches].

-- End of Section --

SECTION TABLE OF CONTENTS

DIVISION 02 - SITE WORK

SECTION 02316

EXCAVATION, TRENCHING, AND BACKFILLING FOR UTILITIES SYSTEMS

PART 1 GENERAL

1.1 REFERENCES
1.2 MEASUREMENT AND PAYMENT
1.2.1 Trench Excavation
1.2.2 Rock Excavation
1.2.3 Sheeting and Bracing
1.2.3.1 Timber Sheeting
1.2.3.2 Steel Sheeting and Soldier Piles
1.2.4 Select Granular Material
1.3 DEGREE OF COMPACTION
1.4 SUBMITTALS

PART 2 PRODUCTS

2.1 MATERIALS
2.1.1 Satisfactory Materials
2.1.2 Unsatisfactory Materials
2.1.3 Cohesionless and Cohesive Materials
2.1.4 Rock
2.1.5 Unyielding Material
2.1.6 Unstable Material
2.1.7 Select Granular Material
2.1.8 Initial Backfill Material
2.2 PLASTIC MARKING TAPE

PART 3 EXECUTION

3.1 EXCAVATION
3.1.1 Trench Excavation Requirements
3.1.1.1 Bottom Preparation
3.1.1.2 Removal of Unyielding Material
3.1.1.3 Removal of Unstable Material
3.1.1.4 Excavation for Appurtenances
3.1.1.5 Jacking, Boring, and Tunneling
3.1.2 Stockpiles
3.2 BACKFILLING AND COMPACTION
3.2.1 Trench Backfill
3.2.1.1 Replacement of Unyielding Material
3.2.1.2 Replacement of Unstable Material
3.2.1.3 Bedding and Initial Backfill
3.2.1.4 Final Backfill
3.2.2 Backfill for Appurtenances

3.3 SPECIAL REQUIREMENTS
3.3.1 Gas Distribution
3.3.2 Water Lines
3.3.3 Heat Distribution System
3.3.4 Electrical Distribution System
3.3.5 Plastic Marking Tape
3.4 TESTING
3.4.1 Testing Facilities
3.4.2 Testing of Backfill Materials
3.4.3 Field Density Tests
3.4.4 Displacement of Sewers

-- End of Section Table of Contents --

SECTION 02316

EXCAVATION, TRENCHING, AND BACKFILLING FOR UTILITIES SYSTEMS

PART 1 GENERAL

1.1 REFERENCES

The publications listed below form a part of this specification to the extent referenced. The publications are referred to in the text by basic designation only.

AMERICAN SOCIETY FOR TESTING AND MATERIALS (ASTM)

1.2 MEASUREMENT AND PAYMENT

Measurement and payment shall be based on completed work performed in accordance with the drawings and specifications.

1.2.1 Trench Excavation

Trench excavation shall be the number of linear meters feet measured along the centerline of the trench and excavated to the depths and widths specified for the particular size of pipe. No increase shall be made for the extra width required at manholes and similar structures. Payment for trench excavation, as so measured, shall constitute full payment for excavation and backfilling, [including specified overdepth] except in rock or unstable trench bottoms. Unstable trench bottoms shall be replaced by select granular material and paid for as specified below. Trench excavation shall also include the additional width at manholes and similar structures, the furnishing, placing and removal of sheeting and bracing, pumping and

bailing, and all incidentals necessary to complete the work required by this section.

1.2.2 Rock Excavation

Rock excavation shall be measured and paid for by the number of cubic meters yards of acceptably excavated rock material. The material shall be measured in place, but volume shall be based on a maximum 750 mm 30 inch width for pipes 300 mm (12 inches) 12 inches in diameter or less, and a maximum width of 400 mm 16 inches greater than the outside diameter of the pipe for pipes over 300 mm (12 inches) 12 inches in diameter. The measurement shall include all authorized overdepth rock excavation as determined by the Contracting Officer. For manholes and other appurtenances, volumes of rock excavation shall be computed on the basis of 300 mm 1 foot outside of the wall lines of the structures. Payment for rock excavation will be made in addition to the price bid for the trench excavation, and will include all necessary drilling and blasting and all incidentals necessary to excavate and dispose of the rock. Backfill replacing rock excavation will not be paid for separately, but will be included in the unit price for rock excavation.

1.2.3 Sheeting and Bracing

Sheeting and bracing, when shown or authorized by the Contracting Officer to be left in place, will be paid for as follows: [_____].

1.2.3.1 Timber Sheeting

Timber sheeting will be paid for as the number of board feet of lumber below finish grade measured in place prior to backfilling. Sheeting wasted when cut off between the finished grade and 300 mm 1 foot below the finished grade also shall be included in the measurement.

1.2.3.2 Steel Sheeting and Soldier Piles

Steel sheeting, soldier piles, and steel bracing will be paid for according to the number of pounds of steel calculated. This calculation shall be made by multiplying the measured in-place length in meters feet below finish grade by the unit weight of the section in kg per meter. pounds per foot. Unit weight of rolled steel sections shall be obtained from recognized steel manuals. [Sheeting wasted when cut off between the finished grade and a distance of up to [_____] meters feet below the finished grade shall be included in the measurement.]

1.2.4 Select Granular Material

Select granular material shall be measured in place as the actual cubic meters yards replacing wet or unstable material in trench bottoms [within the limits shown] [in authorized overdepth areas]. The unit price shall include furnishing and placing the granular material, excavation and disposal of unsatisfactory material, and additional requirements for sheeting and bracing, pumping, bailing, cleaning, and other incidentals necessary to complete the work. Payment for select granular material will be made in addition to the bid price for trench excavation.

1.3 DEGREE OF COMPACTION

Degree of compaction shall be expressed as a percentage of the maximum density obtained by the test procedure presented in ASTM D 1557.

1.4 SUBMITTALS

Government approval is required for submittals with a "G" designation; submittals not having a "G" designation are for information only. When used, a designation following the "G" designation identifies the office that will review the submittal for the Government. The following shall be submitted in accordance with Section 01330 SUBMITTAL PROCEDURES:

SD-06 Test Reports

Field Density Tests; [_____], [_____]
Testing of Backfill Materials; [_____], [_____]

Copies of all laboratory and field test reports within 24 hours of the completion of the test.

PART 2 PRODUCTS

2.1 MATERIALS

2.1.1 Satisfactory Materials

Satisfactory materials shall comprise any materials classified by ASTM D 2487 as GW, GP, GM, GP-GM, GW-GM, GC, GP-GC, GM-GC, SW, SP, [SM,] [SW-SM,] [SC,] [SW-SC,] [SP-SM,] [SP-SC,] [CL,] [ML,] [CL-ML,] [CH,] [MH].

2.1.2 Unsatisfactory Materials

Materials which do not comply with the requirements for satisfactory materials are unsatisfactory. Unsatisfactory materials also include man-made fills, trash, refuse, or backfills from previous construction. Unsatisfactory material also includes material classified as satisfactory which contains root and other organic matter, frozen material, and stones larger than [_____] mm inches. The Contracting Officer shall be notified of any contaminated materials.

2.1.3 Cohesionless and Cohesive Materials

Cohesionless materials shall include materials classified in ASTM D 2487 as GW, GP, SW, and SP. Cohesive materials shall include materials classified as GC, SC, ML, CL, MH, and CH. Materials classified as GM and SM shall be identified as cohesionless only when the fines are nonplastic.

2.1.4 Rock

Rock shall consist of boulders measuring 1/2 cubic meter 1/2 cubic yard or more and materials that cannot be removed without systematic drilling and blasting such as rock material in ledges, bedded deposits, unstratified masses and conglomerate deposits, and below ground concrete or masonry structures, exceeding 1/2 cubic meter 1/2 cubic yard in volume, except that pavements shall not be considered as rock.

2.1.5 Unyielding Material

Unyielding material shall consist of rock and gravelly soils with stones greater than [_____] millimeters inches in any dimension or as defined by the pipe manufacturer, whichever is smaller.

2.1.6 Unstable Material

Unstable material shall consist of materials too wet to properly support the utility pipe, conduit, or appurtenant structure.

2.1.7 Select Granular Material

Select granular material shall consist of well-graded sand, gravel, crushed gravel, crushed stone or crushed slag composed of hard, tough and durable particles, and shall contain not more than 10 percent by weight of material passing a 0.075 mm No. 200 mesh sieve and no less than 95 percent by weight passing the 25 mm 1 inch sieve. The maximum allowable aggregate size shall be [_____] millimeters, inches, or the maximum size recommended by the pipe manufacturer, whichever is smaller.

2.1.8 Initial Backfill Material

Initial backfill shall consist of select granular material or satisfactory materials free from rocks [_____] millimeters inches or larger in any dimension or free from rocks of such size as recommended by the pipe manufacturer, whichever is smaller. When the pipe is coated or wrapped for corrosion protection, the initial backfill material shall be free of stones larger than [_____] millimeters inches in any dimension or as recommended by the pipe manufacturer, whichever is smaller.

2.2 PLASTIC MARKING TAPE

Plastic marking tape shall be acid and alkali-resistant polyethylene film, 152 mm (6 inches) 6 inches wide with minimum thickness of 0.102 mm (0.004 inch). 0.004 inch. Tape shall have a minimum strength of 12.1 MPa (1750 psi) 1750 psi lengthwise and 10.3 MPa (1500 psi) 1500 psi crosswise. The tape shall be manufactured with integral wires, foil backing or other means to enable detection by a metal detector when the tape is buried up to 1 meter 3 feet deep. The tape shall be of a type specifically manufactured for marking and locating underground utilities. The metallic core of the tape shall be encased in a protective jacket or provided with other means to protect it from corrosion. Tape color shall be as specified in TABLE 1 and shall bear a continuous printed inscription describing the specific utility.

TABLE 1. Tape Color

Red:	Electric
Yellow:	Gas, Oil, Dangerous Materials
Orange:	Telephone, Telegraph, Television, Police, and Fire Communications
Blue:	Water Systems
Green:	Sewer Systems

PART 3 EXECUTION

3.1 EXCAVATION

Excavation shall be performed to the lines and grades indicated. Rock excavation shall include removal and disposition of material defined as rock in paragraph MATERIALS. Earth excavation shall include removal and disposal of material not classified as rock excavation. During excavation, material satisfactory for backfilling shall be stockpiled in an orderly manner at a distance from the banks of the trench equal to 1/2 the depth of the excavation, but in no instance closer than 600 mm. 2 feet. Excavated material not required or not satisfactory for backfill shall be removed from the site [or shall be disposed of by [_____]]. Grading shall be done as may be necessary to prevent surface water from flowing into the excavation, and any water accumulating shall be removed to maintain the stability of the bottom and sides of the excavation. Unauthorized overexcavation shall be backfilled in accordance with paragraph BACKFILLING AND COMPACTION at no additional cost to the Government.

3.1.1 Trench Excavation Requirements

The trench shall be excavated as recommended by the manufacturer of the pipe to be installed. Trench walls below the top of the pipe shall be sloped, or made vertical, and of such width as recommended in the manufacturer's installation manual. Where no manufacturer's installation manual is available, trench walls shall be made vertical. Trench walls more than [_____] meters feet high shall be shored, cut back to a stable slope, or provided with equivalent means of protection for employees who may be exposed to moving ground or cave in. Vertical trench walls more than [_____] meters feet high shall be shored. Trench walls which are cut back shall be excavated to at least the angle of repose of the soil. Special attention shall be given to slopes which may be adversely affected by weather or moisture content. The trench width below the top of pipe shall not exceed 600 mm (24 inches) 24 inches plus pipe outside diameter (O.D.) for pipes of less than 600 mm (24 inches) 24 inches inside diameter and shall not exceed 900 mm (36 inches) 36 inches plus pipe outside diameter for sizes larger than 600 mm (24 inches) 24 inches inside diameter. Where recommended trench widths are exceeded, redesign, stronger pipe, or special installation procedures shall be utilized by the Contractor. The cost of redesign, stronger pipe, or special installation procedures shall be borne by the Contractor without any additional cost to the Government.

3.1.1.1 Bottom Preparation

The bottoms of trenches shall be accurately graded to provide uniform bearing and support for the bottom quadrant of each section of the pipe. Bell holes shall be excavated to the necessary size at each joint or coupling to eliminate point bearing. Stones of [_____] millimeters inches or greater in any dimension, or as recommended by the pipe manufacturer, whichever is smaller, shall be removed to avoid point bearing.

3.1.1.2 Removal of Unyielding Material

Where [overdepth is not indicated and] unyielding material is encountered in the bottom of the trench, such material shall be removed [_____] millimeters

inches below the required grade and replaced with suitable materials as provided in paragraph BACKFILLING AND COMPACTION.

3.1.1.3 Removal of Unstable Material

Where unstable material is encountered in the bottom of the trench, such material shall be removed to the depth directed and replaced to the proper grade with select granular material as provided in paragraph BACKFILLING AND COMPACTION. When removal of unstable material is required due to the Contractor's fault or neglect in performing the work, the resulting material shall be excavated and replaced by the Contractor without additional cost to the Government.

3.1.1.4 Excavation for Appurtenances

Excavation for manholes, catch-basins, inlets, or similar structures shall be [sufficient to leave at least 300 mm 12 inches clear between the outer structure surfaces and the face of the excavation or support members] [of sufficient size to permit the placement and removal of forms for the full length and width of structure footings and foundations as shown.] Rock shall be cleaned of loose debris and cut to a firm surface either level, stepped, or serrated, as shown or as directed. Loose disintegrated rock and thin strata shall be removed. Removal of unstable material shall be as specified above. When concrete or masonry is to be placed in an excavated area, special care shall be taken not to disturb the bottom of the excavation. Excavation to the final grade level shall not be made until just before the concrete or masonry is to be placed.

3.1.1.5 Jacking, Boring, and Tunneling

Unless otherwise indicated, excavation shall be by open cut except that sections of a trench may be jacked, bored, or tunneled if, in the opinion of the Contracting Officer, the pipe, cable, or duct can be safely and properly installed and backfill can be properly compacted in such sections.

3.1.2 Stockpiles

Stockpiles of satisfactory [and unsatisfactory] [and wasted materials] shall be placed and graded as specified. Stockpiles shall be kept in a neat and well drained condition, giving due consideration to drainage at all times. The ground surface at stockpile locations shall be cleared, grubbed, and sealed by rubber-tired equipment, excavated satisfactory and unsatisfactory materials shall be separately stockpiled. Stockpiles of satisfactory materials shall be protected from contamination which may destroy the quality and fitness of the stockpiled material. If the Contractor fails to protect the stockpiles, and any material becomes unsatisfactory, such material shall be removed and replaced with satisfactory material from approved sources at no additional cost to the Government. [Locations of stockpiles of satisfactory materials shall be
[as shown] [subject to prior approval of the Contracting Officer].]

3.2 BACKFILLING AND COMPACTION

Backfill material shall consist of satisfactory material, select granular material, or initial backfill material as required. Backfill shall be placed in layers not exceeding 150 mm 6 inches loose thickness for compaction by hand operated machine compactors, and 200 mm 8 inches loose thickness for other than hand operated machines, unless otherwise specified. Each layer shall be compacted to at least 95 percent maximum density for cohesionless soils and 90 percent maximum density for cohesive soils, unless otherwise specified.

3.2.1 Trench Backfill

Trenches shall be backfilled to the grade shown. [The trench shall be backfilled to [_____] meters feet above the top of pipe prior to performing the required pressure tests. The joints and couplings shall be left uncovered during the pressure test.] [The trench shall not be backfilled until all specified tests are performed.]

3.2.1.1 Replacement of Unyielding Material

Unyielding material removed from the bottom of the trench shall be replaced with select granular material or initial backfill material.

3.2.1.2 Replacement of Unstable Material

Unstable material removed from the bottom of the trench or excavation shall be replaced with select granular material placed in layers not exceeding 150 mm 6 inches loose thickness.

3.2.1.3 Bedding and Initial Backfill

[Bedding shall be of the type and thickness shown.] Initial backfill material shall be placed and compacted with approved tampers to a height of at least one foot above the utility pipe or conduit. The backfill shall be brought up evenly on both sides of the pipe for the full length of the pipe. Care shall be taken to ensure thorough compaction of the fill under the haunches of the pipe.

3.2.1.4 Final Backfill

The remainder of the trench, except for special materials for roadways, railroads and airfields, shall be filled with satisfactory material. Backfill material shall be placed and compacted as follows:

a. Roadways, Railroads, and Airfields: Backfill shall be placed up to the elevation at which the requirements in Section 02300 EARTHWORK control. Water flooding or jetting methods of compaction will not be permitted.

b. Sidewalks, Turfed or Seeded Areas and Miscellaneous Areas: Backfill shall be deposited in layers of a maximum of 300 mm 12 inch loose thickness, and compacted to 85 percent maximum density for cohesive soils and 90 percent maximum density for cohesionless soils. [Water flooding or jetting methods of compaction will be

permitted for granular noncohesive backfill material. Water jetting shall not be allowed to penetrate the initial backfill.] [Compaction by water flooding or jetting will not be permitted.] This requirement shall also apply to all other areas not specifically designated above.

3.2.2 Backfill for Appurtenances

After the manhole, catchbasin, inlet, or similar structure has been constructed [and the concrete has been allowed to cure for [_____] days], backfill shall be placed in such a manner that the structure will not be damaged by the shock of falling earth. The backfill material shall be deposited and compacted as specified for final backfill, and shall be brought up evenly on all sides of the structure to prevent eccentric loading and excessive stress.

3.3 SPECIAL REQUIREMENTS

Special requirements for both excavation and backfill relating to the specific utilities are as follows:

3.3.1 Gas Distribution

Trenches shall be excavated to a depth that will provide not less than 450 mm 18 inches of cover in rock excavation and not less than 600 mm 24 inches of cover in other excavation. Trenches shall be graded as specified for pipe-laying requirements in Section 02556 GAS DISTRIBUTION SYSTEM.

3.3.2 Water Lines

Trenches shall be of a depth to provide a minimum cover of [_____] meters feet from the existing ground surface, or from the indicated finished grade, whichever is lower, to the top of the pipe. [For fire protection yard mains or piping, an additional [_____] millimeters inches of cover is required.]

3.3.3 Heat Distribution System

Initial backfill material shall be free of stones larger than 6.3 mm 1/4 inch in any dimension.

3.3.4 Electrical Distribution System

Direct burial cable and conduit or duct line shall have a minimum cover of 600 mm 24 inches from the finished grade, unless otherwise indicated. [Special trenching requirements for direct-burial electrical cables and conduits are specified in Section 16375 ELECTRICAL DISTRIBUTION SYSTEM, UNDERGROUND.]

3.3.5 Plastic Marking Tape

Warning tapes shall be installed directly above the pipe, at a depth of [450] [18] [_____] millimeters inches below finished grade unless otherwise shown.

3.4 TESTING

Testing shall be the responsibility of the Contractor and shall be performed at no additional cost to the Government.

3.4.1 Testing Facilities

Tests shall be performed by an approved commercial testing laboratory or may be tested by facilities furnished by the Contractor. No work requiring testing will be permitted until the facilities have been inspected and approved by the Contracting Officer.

3.4.2 Testing of Backfill Materials

Classification of backfill materials shall be determined in accordance with ASTM D 2487 and the moisture-density relations of soils shall be determined in accordance with ASTM D 1557. A minimum of one soil classification and one moisture-density relation test shall be performed on each different type of material used for bedding and backfill.

3.4.3 Field Density Tests

Tests shall be performed in sufficient numbers to ensure that the specified density is being obtained. A minimum of one field density test per lift of backfill for every [_____] meters feet of installation shall be performed. One moisture density relationship shall be determined for every 1500 cubic meters 1500 cubic yards of material used. Field in-place density shall be determined in accordance with [ASTM D 1556] [ASTM D 2167] [ASTM D 2922]. When ASTM D 2922 is used, the calibration curves shall be checked and adjusted using the sand cone method as described in paragraph Calibration of the ASTM publication. ASTM D 2922 results in a wet unit weight of soil and when using this method, ASTM D 3017 shall be used to determine the moisture content of the soil. The calibration curves furnished with the moisture gauges shall be checked along with density calibration checks as described in ASTM D 3017. The calibration checks of both the density and moisture gauges shall be made at the beginning of a job, on each different type of material encountered, at intervals as directed by the Contracting Officer. Copies of calibration curves, results of calibration tests, and field and laboratory density tests shall be furnished to the Contracting Officer. Trenches improperly compacted shall be reopened to the depth directed, then refilled and compacted to the density specified at no additional cost to the Government.

3.4.4 Displacement of Sewers

After other required tests have been performed and the trench backfill compacted to [[_____] meters feet above the top of the pipe] [the finished grade surface], the pipe shall be inspected to determine whether significant displacement has occurred. This inspection shall be conducted in the presence of the Contracting Officer. Pipe sizes larger than 900 mm (36 inches) 36 inches shall be entered and examined, while smaller diameter pipe shall be inspected by shining a light or laser between manholes or manhole locations, or by the use of television cameras passed through the pipe. If, in the judgement of the Contracting Officer, the interior of the pipe shows

poor alignment or any other defects that would cause improper functioning of the system, the defects shall be remedied as directed at no additional cost to the Government.

-- End of Section --

SECTION TABLE OF CONTENTS

DIVISION 03 - CONCRETE

SECTION 03200

CONCRETE REINFORCEMENT

PART 1 GENERAL

1.1 REFERENCES
1.2 SUBMITTALS
1.3 WELDING
1.4 DELIVERY AND STORAGE

PART 2 PRODUCTS

2.1 DOWELS
2.2 FABRICATED BAR MATS
2.3 REINFORCING STEEL
2.4 WELDED WIRE FABRIC
2.5 WIRE TIES
2.6 SUPPORTS
2.7 SYNTHETIC FIBER REINFORCEMENT

PART 3 EXECUTION

3.1 REINFORCEMENT
3.1.1 Placement
3.1.2 Splicing
3.2 WELDED-WIRE FABRIC PLACEMENT
3.3 DOWEL INSTALLATION
3.4 SYNTHETIC FIBER REINFORCED CONCRETE
3.5 SPECIAL INSPECTION AND TESTING FOR SEISMIC-RESISTING SYSTEMS

-- End of Section Table of Contents

SECTION 03200

CONCRETE REINFORCEMENT

PART 1 GENERAL

1.1 REFERENCES

The publications listed below form a part of this specification to the extent referenced. The publications are referred to in the text by basic designation only.

ACI INTERNATIONAL (ACI)

AMERICAN SOCIETY FOR TESTING AND MATERIALS (ASTM)

AMERICAN WELDING SOCIETY (AWS)

CONCRETE REINFORCING STEEL INSTITUTE (CRSI)

Practice

1.2 SUBMITTALS

Government approval is required for submittals with a "G" designation; submittals not having a "G" designation are for information only. When used, a designation following the "G" designation identifies the office that will review the submittal for the Government. The following shall be submitted in accordance with Section 01330 SUBMITTAL PROCEDURES:

SD-02 Shop Drawings

Reinforcement; [_____], [_____]

Detail drawings showing reinforcing steel placement, schedules, sizes, grades, and splicing and bending details. Drawings shall show support details including types, sizes and spacing.

SD-03 Product Data

Welding; [_____], [_____]

A list of qualified welders names.

SD-07 Certificates

Reinforcing Steel; [_____], [_____]

Certified copies of mill reports attesting that the reinforcing steel furnished contains no less than 25 percent recycled scrap steel and meets the requirements specified herein, prior to the installation of reinforcing steel.

1.3 WELDING

Welders shall be qualified in accordance with AWS D1.4. Qualification test shall be performed at the worksite and the Contractor shall notify the Contracting Officer 24 hours prior to conducting tests. Special welding procedures and welders qualified by others may be accepted as permitted by AWS D1.4.

1.4 DELIVERY AND STORAGE

Reinforcement and accessories shall be stored off the ground on platforms, skids, or other supports.

PART 2 PRODUCTS

2.1 DOWELS

Dowels shall conform to ASTM A 675/A 675M, Grade 80. Steel pipe conforming to ASTM A 53, Schedule 80, may be used as dowels provided the ends are closed with metal or plastic inserts or with mortar.

2.2 FABRICATED BAR MATS

Fabricated bar mats shall conform to ASTM A 184/A 184M.

2.3 REINFORCING STEEL

Reinforcing steel shall be deformed bars conforming to ASTM A 615/A 615M or ASTM A 706/A 706M, grades and sizes as indicated. Cold drawn wire used for spiral reinforcement shall conform to ASTM A 82. In highly corrosive environments or when directed by the Contracting Officer, reinforcing steel shall conform to ASTM A 767/A 767M or ASTM A 775/A 775M as appropriate.

2.4 WELDED WIRE FABRIC

Welded wire fabric shall conform to [ASTM A 185] [ASTM A 496] [ASTM A 497]. When directed by the Contracting Officer for special applications, welded wire fabric shall conform to ASTM A 884/A 884M.

2.5 WIRE TIES

Wire ties shall be 16 gauge or heavier black annealed steel wire.

2.6 SUPPORTS

Bar supports for formed surfaces shall be designed and fabricated in accordance with CRSI MSP-1 and shall be steel or precast concrete blocks. Precast concrete blocks shall have wire ties and shall be not less than 100 by 100 mm 4 inches square when supporting reinforcement on ground. Precast concrete block shall have compressive strength equal to that of the surrounding concrete. Where concrete formed surfaces will be exposed to weather or where surfaces are to be painted, steel supports within 13 mm 1/2 inch of concrete surface shall be galvanized, plastic protected or of stainless steel. Concrete supports used in concrete exposed to view shall have the same color and texture as the finish surface. For slabs on grade, supports shall be precast concrete blocks, plastic coated steel fabricated with bearing plates, or specifically designed wire-fabric supports fabricated of plastic.

2.7 SYNTHETIC FIBER REINFORCEMENT

Synthetic fiber shall be polypropylene with a denier less than 100 and a nominal fiber length of 50 mm. 2 inches.

PART 3 EXECUTION

3.1 REINFORCEMENT

Reinforcement shall be fabricated to shapes and dimensions shown and shall conform to the requirements of ACI 318M ACI 318/318R. Reinforcement shall be cold bent unless otherwise authorized. Bending may be accomplished in the field or at the mill. Bars shall not be bent after embedment in concrete. Safety caps shall be placed on all exposed ends of vertical concrete reinforcement bars that pose a danger to life safety. Wire tie ends shall face away from the forms.

3.1.1 Placement

Reinforcement shall be free from loose rust and scale, dirt, oil, or other deleterious coating that could reduce bond with the concrete. Reinforcement shall be placed in accordance with ACI 318M ACI 318/318R at locations shown plus or minus one bar diameter. Reinforcement shall not be continuous through expansion joints and shall be as indicated through construction or contraction joints. Concrete coverage shall be as indicated or as required by ACI 318M ACI 318/318R. If bars are moved more than one bar diameter to avoid interference with other reinforcement, conduits or embedded items, the resulting arrangement of bars, including additional bars required to meet structural requirements, shall be approved before concrete is placed.

3.1.2 Splicing

Splices of reinforcement shall conform to ACI 318M ACI 318/318R and shall be made only as required or indicated. Splicing shall be by lapping or by mechanical or welded butt connection; except that lap splices shall not be used for bars larger than No. 11 unless otherwise indicated. Welding shall conform to AWS D1.4. Welded butt splices shall be full penetration butt welds. Lapped bars shall be placed in contact and securely tied or spaced transversely apart to permit the embedment of the entire surface of each bar in concrete. Lapped bars shall not be spaced farther apart than one-fifth the required length of lap or 150 mm. 6 inches. Mechanical butt splices shall be in accordance with the recommendation of the manufacturer of the mechanical splicing device. Butt splices shall develop 125 percent of the specified minimum yield tensile strength of the spliced bars or of the smaller bar in transition splices. Bars shall be flame dried before butt splicing. Adequate jigs and clamps or other devices shall be provided to support, align, and hold the longitudinal centerline of the bars to be butt spliced in a straight line.

3.2 WELDED-WIRE FABRIC PLACEMENT

Welded-wire fabric shall be placed in slabs as indicated. Fabric placed in slabs on grade shall be continuous between expansion, construction, and contraction joints. Fabric placement at joints shall be as indicated. Lap splices shall be made in such a way that the overlapped area equals the distance between the outermost crosswires plus 50 mm. 2 inches. Laps shall be staggered to avoid continuous laps in either direction. Fabric shall

be wired or clipped together at laps at intervals not to exceed 1.2 m. 4 feet. Fabric shall be positioned by the use of supports.

3.3 DOWEL INSTALLATION

Dowels shall be installed in slabs on grade at locations indicated and at right angles to joint being doweled. Dowels shall be accurately positioned and aligned parallel to the finished concrete surface before concrete placement. Dowels shall be rigidly supported during concrete placement. One end of dowels shall be coated with a bond breaker.

3.4 SYNTHETIC FIBER REINFORCED CONCRETE

Fiber reinforcement shall be added to the concrete mix in accordance with the applicable sections of ASTM C 1116 and the recommendations of the manufacturer, and in an amount of [0.1] [_____] percent by volume.

3.5 SPECIAL INSPECTION AND TESTING FOR SEISMIC-RESISTING SYSTEMS

Special inspections and testing for seismic-resisting systems and components shall be done in accordance with Section 01452 SPECIAL INSPECTION FOR SEISMIC-RESISTING SYSTEMS.

-- End of Section --

SECTION TABLE OF CONTENTS

DIVISION 05 - METALS

SECTION 05090

WELDING, STRUCTURAL

PART 1 GENERAL

1.1 REFERENCES
1.2 DEFINITIONS
1.3 GENERAL REQUIREMENTS
1.3.2 Mock-up Model
1.4 SUBMITTALS
1.5 WELDING PROCEDURE QUALIFICATIONS
1.5.1 Previous Qualifications
1.5.2 Prequalified Procedures
1.5.3 Retests
1.6 WELDER, WELDING OPERATOR, AND TACKER QUALIFICATION
1.6.1 Previous Personnel Qualifications
1.6.2 Certificates
1.6.3 Renewal of Qualification
1.7 INSPECTOR QUALIFICATION
1.8 SYMBOLS
1.9 SAFETY

PART 2 PRODUCTS

2.1 WELDING EQUIPMENT AND MATERIALS

PART 3 EXECUTION

3.1 WELDING OPERATIONS
3.1.1 Requirements
3.1.2 Identification
3.2 QUALITY CONTROL
3.3 STANDARDS OF ACCEPTANCE
3.3.1 Nondestructive Examination

3.3.2 Destructive Tests
3.4 GOVERNMENT INSPECTION AND TESTING
3.5 CORRECTIONS AND REPAIRS

-- End of Section Table of Contents --

SECTION 05090

WELDING, STRUCTURAL

PART 1 GENERAL

1.1 REFERENCES

The publications listed below form a part of this specification to the extent referenced. The publications are referred to in the text by basic designation only.

AMERICAN INSTITUTE OF STEEL CONSTRUCTION (AISC)

AMERICAN SOCIETY FOR NONDESTRUCTIVE TESTING (ASNT)

AMERICAN WELDING SOCIETY (AWS)

1.2 DEFINITIONS

Definitions of welding terms shall be in accordance with AWS A3.0.

1.3 GENERAL REQUIREMENTS

The design of welded connections shall conform to AISC ASD Spec unless otherwise indicated or specified. Material with welds will not be accepted unless the welding is specified or indicated on the drawings or otherwise approved. Welding shall be as specified in this section, except where additional requirements are shown on the drawings or are specified in other sections. Welding shall not be started until welding procedures, inspectors, nondestructive testing personnel, welders, welding operators, and tackers have been qualified and the submittals approved by the Contracting Officer. Qualification testing shall be performed at or near the work site. Each Contractor performing welding shall maintain records of the test results obtained in welding procedure, welder, welding operator, and tacker performance qualifications.

1.3.1 Pre-erection Conference

A pre-erection conference shall be held, prior to the start of the field welding, to bring all affected parties together and to gain a naturally clear understanding of the project and the Welding Procedure Specifications (WPS) (which the Contractor shall develop and submit for all welding, including welding done using prequalified procedures). Attendees shall include all Contractor's welding production and inspection personnel and appropriate Government personnel. Items for discussion could include: responsibilities of various parties; welding procedures and processes to be followed; welding sequence (both within a joint and joint sequence within the building); inspection requirements and procedures, both visual and ultrasonic; welding schedule; fabrication of mock-up model; and other items deemed necessary by the attendees.

1.3.2 Mock-up Model

The field-welded connection designated as the mock-up model on the drawings shall be the first connection made. All welders qualified and designated to perform field-welded groove joints shall be present during the welding of the mock-up model connections and each one shall perform a part of the welding. The mock-up test shall simulate the physical and environmental conditions that will be encountered during the welding of all groove joints. All inspection procedures required for groove welded joints, including NDE tests, shall be performed on the mock-up model. All Contractor inspection and testing personnel that will perform QC of groove welded joints shall be present during the welding of the mock-up model and each one shall perform the inspection procedures to be performed on production welding of these joints. This mock-up model connection shall be the standard of performance, both for the welding and inspection procedures used and the results to be achieved in the production welding for these groove welded joints.

1.4 SUBMITTALS

Government approval is required for submittals with a "G" designation; submittals not having a "G" designation are for information only. When used, a designation following the "G" designation identifies the office that will review the submittal for the Government. The following shall be submitted in accordance with Section 01330 SUBMITTAL PROCEDURES:

SD-03 Product Data

Welding Procedure Qualifications; G, [_____]
Welder, Welding Operator, and Tacker Qualification; [_____], [___]
Inspector Qualification; [___], [___]
Previous Qualifications; [___], [___]
Prequalified Procedures; [_____], [_____]

Copies of the welding procedure specifications; the procedure qualification test records; and the welder, welding operator, or tacker qualification test records.

SD-06 Test Reports

Quality Control; [_____], [_____]

A quality assurance plan and records of tests and inspections.

1.5 WELDING PROCEDURE QUALIFICATIONS

Except for prequalified (per AWS D1.1) and previously qualified procedures, each Contractor performing welding shall record in detail and shall qualify the welding procedure specification for any welding procedure followed in the fabrication of weldments. Qualification of welding procedures shall conform to AWS D1.1 and to the specifications in this section. Copies of the welding procedure specification and the results of the procedure qualification test for each type of welding which requires procedure qualification shall be submitted for approval. Approval of any procedure, however, will not relieve the Contractor of the sole responsibility for producing a finished structure meeting all the requirements of these specifications. This information shall be submitted on the forms in Appendix E of AWS D1.1. Welding procedure specifications shall be individually identified and shall be referenced on the detail drawings and erection drawings, or shall be suitably keyed to the contract drawings. In case of conflict between this specification and AWS D1.1, this specification governs.

1.5.1 Previous Qualifications

Welding procedures previously qualified by test may be accepted for this contract without requalification if the following conditions are met:

a. Testing was performed by an approved testing laboratory, technical consultant, or the Contractor's approved quality control organization.

b. The qualified welding procedure conforms to the requirements of this specification and is applicable to welding conditions encountered under this contract.

c. The welder, welding operator, and tacker qualification tests conform to the requirements of this specification and are applicable to welding conditions encountered under this contract.

1.5.2 Prequalified Procedures

Welding procedures which are considered prequalified as specified in AWS D1.1 will be accepted without further qualification. The Contractor shall submit for approval a listing or an annotated drawing to indicate the joints not prequalified. Procedure qualification shall be required for these joints.

1.5.3 Retests

If welding procedure fails to meet the requirements of AWS D1.1, the procedure specification shall be revised and requalified, or at the Contractor's option, welding procedure may be retested in accordance with

AWS D1.1. If the welding procedure is qualified through retesting, all test results, including those of test welds that failed to meet the requirements, shall be submitted with the welding procedure.

1.6 WELDER, WELDING OPERATOR, AND TACKER QUALIFICATION

Each welder, welding operator, and tacker assigned to work on this contract shall be qualified in accordance with the applicable requirements of AWS D1.1 and as specified in this section. Welders, welding operators, and tackers who make acceptable procedure qualification test welds will be considered qualified for the welding procedure used.

1.6.1 Previous Personnel Qualifications

At the discretion of the Contracting Officer, welders, welding operators, and tackers qualified by test within the previous 6 months may be accepted for this contract without requalification if all the following conditions are met:

a. Copies of the welding procedure specifications, the procedure qualification test records, and the welder, welding operator, and tacker qualification test records are submitted and approved in accordance with the specified requirements for detail drawings.

b. Testing was performed by an approved testing laboratory, technical consultant, or the Contractor's approved quality control organization.

c. The previously qualified welding procedure conforms to the requirements of this specification and is applicable to welding conditions encountered under this contract.

d. The welder, welding operator, and tacker qualification tests conform to the requirements of this specification and are applicable to welding conditions encountered under this contract.

1.6.2 Certificates

Before assigning any welder, welding operator, or tacker to work under this contract, the Contractor shall submit the names of the welders, welding operators, and tackers to be employed, and certification that each individual is qualified as specified. The certification shall state the type of welding and positions for which the welder, welding operator, or tacker is qualified, the code and procedure under which the individual is qualified, the date qualified, and the name of the firm and person certifying the qualification tests. The certification shall be kept on file, and 3 copies shall be furnished. The certification shall be kept current for the duration of the contract.

1.6.3 Renewal of Qualification

Requalification of a welder or welding operator shall be required under any of the following conditions:

a. It has been more than 6 months since the welder or welding operator has used the specific welding process for which he is qualified.

b. There is specific reason to question the welder or welding operator's ability to make welds that meet the requirements of these specifications.

c. The welder or welding operator was qualified by an employer other than those firms performing work under this contract, and a qualification test has not been taken within the past 12 months. Records showing periods of employment, name of employer where welder, or welding operator, was last employed, and the process for which qualified shall be submitted as evidence of conformance.

d. A tacker who passes the qualification test shall be considered eligible to perform tack welding indefinitely in the positions and with the processes for which he is qualified, unless there is some specific reason to question the tacker's ability. In such a case, the tacker shall be required to pass the prescribed tack welding test.

1.7 INSPECTOR QUALIFICATION

Inspector qualifications shall be in accordance with AWS D1.1. Nondestructive testing personnel shall be qualified in accordance with the requirements of ASNT RP SNT-TC-1A for Levels I or II in the applicable nondestructive testing method. The inspector may be supported by assistant welding inspectors who are not qualified to ASNT RP SNT-TC-1A, and assistant inspectors may perform specific inspection functions under the supervision of the qualified inspector.

1.8 SYMBOLS

Symbols shall be in accordance with AWS A2.4, unless otherwise indicated.

1.9 SAFETY

Safety precautions during welding shall conform to AWS Z49.1.

PART 2 PRODUCTS

2.1 WELDING EQUIPMENT AND MATERIALS

All welding equipment, electrodes, welding wire, and fluxes shall be capable of producing satisfactory welds when used by a qualified welder or welding operator performing qualified welding procedures. All welding equipment and materials shall comply with the applicable requirements of AWS D1.1.

PART 3 EXECUTION

3.1 WELDING OPERATIONS

3.1.1 Requirements

Workmanship and techniques for welded construction shall conform to the requirements of AWS D1.1 and AISC ASD Spec. When AWS D1.1 and the AISC ASD Spec specification conflict, the requirements of AWS D1.1 shall govern.

3.1.2 Identification

Welds shall be identified in one of the following ways:

a. Written records shall be submitted to indicate the location of welds made by each welder, welding operator, or tacker.

b. Each welder, welding operator, or tacker shall be assigned a number, letter, or symbol to identify welds made by that individual. The Contracting Officer may require welders, welding operators, and tackers to apply their symbol next to the weld by means of rubber stamp, felt-tipped marker with waterproof ink, or other methods that do not cause an indentation in the metal. For seam welds, the identification mark shall be adjacent to the weld at 1 meter 3 foot intervals. Identification with die stamps or electric etchers shall not be allowed.

3.2 QUALITY CONTROL

Testing shall be done by an approved inspection or testing laboratory or technical consultant; or if approved, the Contractor's inspection and testing personnel may be used instead of the commercial inspection or testing laboratory or technical consultant. The Contractor shall perform visual [and] [radiographic,] [ultrasonic,] [magnetic particle,] [and] [dye penetrant] inspection to determine conformance with paragraph STANDARDS OF ACCEPTANCE. Procedures and techniques for inspection shall be in accordance with applicable requirements of AWS D1.1, except that in radiographic inspection only film types designated as "fine grain," or "extra fine," shall be employed.

3.3 STANDARDS OF ACCEPTANCE

Dimensional tolerances for welded construction, details of welds, and quality of welds shall be in accordance with the applicable requirements of AWS D1.1 and the contract drawings. Nondestructive testing shall be by visual inspection [and radiographic,] [ultrasonic,] [magnetic particle,] [or] [dye penetrant] methods. The minimum extent of nondestructive testing shall be random [_____] percent of welds or joints, as indicated on the drawings.

3.3.1 Nondestructive Examination

The welding shall be subject to inspection and tests in the mill, shop, and field. Inspection and tests in the mill or shop will not relieve the Contractor of the responsibility to furnish weldments of satisfactory quality. When materials or workmanship do not conform to the specification requirements, the Government reserves the right to reject material or workmanship or both at any time before final acceptance of the structure containing the weldment.

3.3.2 Destructive Tests

When metallographic specimens are removed from any part of a structure, the Contractor shall make repairs. The Contractor shall employ qualified welders or welding operators, and shall use the proper joints and welding

procedures, including peening or heat treatment if required, to develop the full strength of the members and joints cut and to relieve residual stress.

3.4 GOVERNMENT INSPECTION AND TESTING

In addition to the inspection and tests performed by the Contractor for quality control, the Government will perform inspection and testing for acceptance to the extent determined by the Contracting Officer. The costs of such inspection and testing will be borne by the Contractor if unsatisfactory welds are discovered, or by the Government if the welds are satisfactory. The work may be performed by the Government's own forces or under a separate contract for inspection and testing. The Government reserves the right to perform supplemental nondestructive and destructive tests to determine compliance with paragraph STANDARDS OF ACCEPTANCE.

3.5 CORRECTIONS AND REPAIRS

When inspection or testing indicates defects in the weld joints, the welds shall be repaired using a qualified welder or welding operator as applicable. Corrections shall be in accordance with the requirements of AWS D1.1 and the specifications. Defects shall be repaired in accordance with the approved procedures. Defects discovered between passes shall be repaired before additional weld material is deposited. Wherever a defect is removed and repair by welding is not required, the affected area shall be blended into the surrounding surface to eliminate sharp notches, crevices, or corners. After a defect is thought to have been removed, and before rewelding, the area shall be examined by suitable methods to ensure that the defect has been eliminated. Repair welds shall meet the inspection requirements for the original welds. Any indication of a defect shall be regarded as a defect, unless reevaluation by nondestructive methods or by surface conditioning shows that no unacceptable defect is present.

-- End of Section --

SECTION TABLE OF CONTENTS

DIVISION 05 - METALS

SECTION 05300

STEEL DECKING

PART 1 GENERAL

1.1 REFERENCES
1.2 SUBMITTALS
1.3 DELIVERY, STORAGE, AND HANDLING

PART 2 PRODUCTS

2.1 DECK UNITS
2.1.1 Roof Deck
2.1.2 Acoustical Deck Units
2.1.3 Composite Deck
2.1.4 Form Deck
2.1.5 Sump Pans
2.1.6 Shear Connectors
2.2 TOUCH-UP PAINT
2.3 ADJUSTING PLATES
2.4 CLOSURE PLATES
2.4.1 Closure Plates for Roof Deck
2.4.2 Closure Plates for Composite Deck
2.4.2.1 Cover Plates to Close Panels
2.4.2.2 Column Closures to Close Openings
2.4.2.3 Sheet Metal
2.5 ACCESSORIES

PART 3 EXECUTION

3.1 ERECTION
3.2 SHORING
3.3 ATTACHMENTS

3.4 HOLES AND OPENINGS
3.5 PREPARATION OF FIRE-PROOFED SURFACES

-- End of Section Table of Contents --

SECTION 05300

STEEL DECKING

PART 1 GENERAL

1.1 REFERENCES

The publications listed below form a part of this specification to the extent referenced. The publications are referred to in the text by basic designation only.

AMERICAN INSTITUTE OF STEEL CONSTRUCTION (AISC)

AMERICAN IRON AND STEEL INSTITUTE (AISI)

AMERICAN SOCIETY FOR TESTING AND MATERIALS (ASTM)

AMERICAN WELDING SOCIETY (AWS)

STEEL DECK INSTITUTE (SDI)

STEEL STRUCTURES PAINTING COUNCIL (SSPC)

1.2 SUBMITTALS

Government approval is required for submittals with a "G" designation; submittals not having a "G" designation are for information only. When used, a designation following the "G" designation identifies the office that will review the submittal for the Government. The following shall be submitted in accordance with Section 01330 SUBMITTAL PROCEDURES:

SD-02 Shop Drawings

Deck Units; [_____], [_____]
Accessories; [_____], [_____]
Attachments; [_____], [_____]
Holes and Openings; [_____], [_____]

Drawings shall include type, configuration, structural properties, location, and necessary details of deck units, accessories, and supporting members; size and location of holes to be cut and reinforcement to be provided; location and sequence of welded [or fastener] connections; and the manufacturer's erection instructions.

SD-03 Product Data

Deck Units; [_____], [_____]

Design computations for the structural properties of the deck units or SDI certification that the units are designed in accordance with SDI specifications.

Attachments; [_____], [_____]

Prior to welding operations, copies of qualified procedures and lists of names and identification symbols of qualified welders and welding operators.

SD-04 Samples

Deck Units; [_____], [_____]
Accessories; [_____], [_____]

A 0.19 sq meter 2 sq. ft. sample of the decking material to be used, along with a sample of each of the accessories used. A sample of acoustical material to be used shall be included.

SD-07 Certificates

Deck Units; [_____], [_____]
Attachments; [_____], [_____]

Manufacturer's certificates attesting that the decking material meets the specified requirements. Manufacturer's certificate attesting that the operators are authorized to use the low-velocity piston tool.

1.3 DELIVERY, STORAGE, AND HANDLING

Deck units shall be delivered to the site in a dry and undamaged condition, stored off the ground with one end elevated, and stored under a weathertight covering permitting good air circulation. Finish of deck units shall be maintained at all times by using touch-up paint whenever necessary to prevent the formation of rust.

PART 2 PRODUCTS

2.1 DECK UNITS

Deck units shall conform to SDI Pub No 29. Panels of maximum possible lengths shall be used to minimize end laps. Deck units shall be fabricated in lengths to span 3 or more supports with flush, telescoped, or nested 50 mm 2 inchlaps at ends, and interlocking, or nested side laps, unless otherwise indicated. Deck with cross-sectional configuration differing from the units indicated may be used, provided that the properties of the proposed units, determined in accordance with AISI Cold-Formed Mnl, are equal to or greater than the properties of the units indicated and that the material will fit the space provided without requiring revisions to adjacent materials or systems.

2.1.1 Roof Deck

Steel deck used in conjunction with insulation and built-up roofing shall conform to ASTM A 792/A 792M, ASTM A 611 or ASTM A 792/A 792M. Roof deck units shall be fabricated of [[0.75] [_____] mm [0.0295] [_____] inch design thickness or thicker steel] [the steel design thickness required by the design drawings] and shall be [shop painted] [galvanized] [painted with an epoxy coating or equivalent applied to prime-coating in accordance with manufacturer's standard] [zinc-coated in conformance with ASTM A 653/A 653M, G90 coating class or aluminum-zinc coated in accordance with ASTM A 792/A 792M Coating Designation AZ55].

2.1.2 Acoustical Deck Units

Deck shall have a noise reduction coefficient of [_____] when measured in accordance with ASTM C 423 using ASTM E 795 Mounting Type F-25. Sound absorbing materials shall be either [glass fiber in roll or premolded form for acoustical steel deck (noncellular)] [and] [or] [glass fiber rigid strip for acoustical steel deck (cellular)] in accordance with manufacturer's standards.

2.1.3 Composite Deck

Deck to receive concrete as a filler or for composite deck assembly shall conform to ASTM A 653/A 653M or ASTM A 611. Deck used as the tension reinforcing in composite deck shall be fabricated of [[0.75] [_____] mm [0.0295] [_____] inch design thickness or thicker steel] [the steel design thickness required by the design drawings], and shall be zinc-coated in conformance with ASTM A 653/A 653M, [G60][G90] coating class. Deck units used in composite deck shall have adequate embossment to develop mechanical shear bond to provide composite action between the deck and the concrete.

2.1.4 Form Deck

Deck used as a permanent form for concrete shall conform to ASTM A 653/A 653M or ASTM A 611. Deck used as a form for concrete shall be fabricated of [[0.38] [_____] mm [0.015] [_____] inch design thickness or thicker steel] [the steel design thickness required by the design drawings], and shall be [painted with one coat of manufacturer's standard paint] [zinc-coated in conformance with ASTM A 653/A 653M, [G60][G90] coating class.]

2.1.5 Sump Pans

Sump pans shall be provided for roof drains and shall be minimum 2 mm 0.075 inch thick steel, [flat] [recessed] type. Sump pans shall be shaped to meet roof slope by the supplier or by a sheet metal specialist. Bearing flanges of sump pans shall overlap steel deck a minimum of 75 mm. 3 inches. Opening in bottom of pan shall be shaped, sized, and reinforced to receive roof drain.

2.1.6 Shear Connectors

Shear connectors shall be [headed stud type, ASTM A 108, Grade 1015 or 1020, cold finished carbon steel with dimensions complying with AISC ASD Spec] [and] [or] [strap type, ASTM A 570/A 570M, Grade D, hot-rolled carbon steel].

2.2 TOUCH-UP PAINT

Touch-up paint for shop-painted units shall be [of the same type used for the shop painting] [_____], and touch-up paint for zinc-coated units shall be [an approved galvanizing repair paint with a high-zinc dust content] [_____]. Welds shall be touched-up with paint conforming to SSPC Paint 20 in accordance with ASTM A 780. Finish of deck units and accessories shall be maintained by using touch-up paint whenever necessary to prevent the formation of rust.

2.3 ADJUSTING PLATES

Adjusting plates or segments of deck units shall be provided in locations too narrow to accommodate full-size units. As far as practical, the plates shall be the same thickness and configuration as the deck units.

2.4 CLOSURE PLATES

2.4.1 Closure Plates for Roof Deck

Voids above interior walls shall be closed with sheet metal where shown. Open deck cells at parapets, end walls, eaves, and openings through roofs shall be closed with sheet metal. Sheet metal shall be same thickness as deck units.

2.4.2 Closure Plates for Composite Deck

The concrete shall be supported and retained at each floor level. Provide edge closures at all edges of the slab of sufficient strength and stiffness to support the wet concrete. Metal closures shall be provided for all openings in composite steel deck 6 mm 1/4 inch and over, including but not limited to:

2.4.2.1 Cover Plates to Close Panels

Cover plates to close panel edge and end conditions and where panels change direction or abut. Butt joints in composite steel deck may receive a tape joint cover.

2.4.2.2 Column Closures to Close Openings

Column closures to close openings between steel deck and structural steel columns.

2.4.2.3 Sheet Metal

Where deck is cut for passage of pipes, ducts, columns, etc., and deck is to remain exposed, provide a neatly cut sheet metal collar to cover edges of deck. Do not cut deck until after installation of supplemental supports.

2.5 ACCESSORIES

The manufacturer's standard accessories shall be furnished as necessary to complete the deck installation. Metal accessories shall be of the same material as the deck and have minimum design thickness as follows: saddles, 1.204 mm (0.0474 inch); 0.0474 inch; welding washers, 1.519 mm (0.0598 inch); 0.0598 inch; cant strip, 0.749 mm (0.0295 inch);0.0295 inch; other metal accessories, 0.909 mm (0.0358 inch);0.0358 inch; unless otherwise indicated. Accessories shall include but not be limited to saddles, welding washers, cant strips, butt cover plates, underlapping sleeves, and ridge and valley plates.

PART 3 EXECUTION

3.1 ERECTION

Erection of deck and accessories shall be in accordance with [SDI Pub No 29] [SDI Diaphram Mnl] and the approved detail drawings. Damaged deck and accessories including material which is permanently stained or contaminated, with burned holes or deformed shall not be installed. The deck units shall be placed on secure supports, properly adjusted, and aligned at right angles

to supports before being permanently secured in place. The deck shall not be [filled with concrete,] used for storage or as a working platform until the units have been secured in position. [Shoring shall be in position before concrete placement begins in composite or form deck.] Loads shall be distributed by appropriate means to prevent damage during construction and to the completed assembly. The maximum uniform distributed storage load shall not exceed the design live load. There shall be no loads suspended directly from the steel deck.
[Acoustical material shall be neatly fitted into the rib voids.]

3.2 SHORING

Shoring requirements for placing and curing of concrete in the composite floor [and roof] deck assemblies shall be as shown.

3.3 ATTACHMENTS

All fasteners shall be installed in accordance with the manufacturer's recommended procedure, except as otherwise specified. The deck units shall be welded with nominal 16 mm 5/8 inch diameter puddle welds [or fastened with screws, powder-actuated fasteners or pneumatically driven fasteners] to supports as indicated on the design drawings and in accordance with requirements of SDI Pub No 29. All welding of steel deck shall be in accordance with AWS D1.3 using methods and electrodes as recommended by the manufacturer of the steel deck being used. Welds shall be made only by operators previously qualified by tests prescribed in AWS D1.3 to perform the type of work required. Welding washers [shall] [shall not] be used at the connections of the deck to supports. Welding washers shall not be used at sidelaps. Holes and similar defects will not be acceptable. Deck ends shall be [lapped 50 mm 2 inches] [butted]. All partial or segments of deck units shall be attached to structural supports in accordance with Section 2.5 of SDI Diaphram Mnl. [Powder-actuated fasteners shall be driven with a low-velocity piston tool by an operator authorized by the manufacturer of the piston tool. Pneumatically driven fasteners shall be driven with a low-velocity fastening tool and shall comply with the manufacturer's recommendations.] [Shear connectors shall be attached as shown and shall be welded as per AWS D1.1 [through the steel deck to the steel member] [directly to the steel member].]

3.4 HOLES AND OPENINGS

All holes and openings required shall be coordinated with the drawings, specifications, and other trades. Holes and openings shall be drilled or cut, reinforced and framed as indicated on the drawings or described in the specifications and as required for rigidity and load capacity. Holes and openings less than 150 mm 6 inches across require no reinforcement. Holes and openings 150 to 300 mm 6 to 12 inches across shall be reinforced by 1.204 mm (0.0474 inch) 0.0474 inch thick steel sheet at least 300 mm 12 inches wider and longer than the opening and be fastened to the steel deck at each corner of the sheet and at a maximum of 150 mm 6 inches on center. Holes and openings larger than 300 mm 12 inches shall be reinforced by steel angles installed perpendicular to the steel joists and supported by the adjacent steel joists. Steel angles shall be installed perpendicular to the deck ribs and shall be fastened to the angles perpendicular to the steel

joists. Openings must not interfere with seismic members such as chords and drag struts.

3.5 PREPARATION OF FIRE-PROOFED SURFACES

Deck surfaces, both composite and noncomposite, which are to receive sprayed-on fireproofing, shall be galvanized and shall be free of all grease, mill oil, paraffin, dirt, salt, and other contaminants which impair adhesion of the fireproofing. Any required cleaning shall be done prior to steel deck installation using a cleaning method that is compatible with the sprayed-on fireproofing.

-- End of Section --

SECTION TABLE OF CONTENTS

DIVISION 05 - METALS

SECTION 05500

MISCELLANEOUS METAL

PART 1 GENERAL

1.1 REFERENCES
1.2 SUBMITTALS
1.3 GENERAL REQUIREMENTS
1.4 DISSIMILAR MATERIALS
1.5 WORKMANSHIP
1.6 ANCHORAGE
1.7 ALUMINUM FINISHES
1.8 SHOP PAINTING

PART 2 PRODUCTS

2.1 ACCESS DOORS AND PANELS
2.2 CHIMNEYS, VENTS, AND SMOKESTACKS
2.3 CLEANOUT DOORS
2.4 COAL-HOPPER DOORS
2.5 CORNER GUARDS AND SHIELDS
2.6 DOOR GUARDS
2.7 PIPE GUARDS
2.8 DOWNSPOUT BOOTS
2.9 EXPANSION JOINT COVERS
2.10 FIRE ESCAPES
2.11 FLOOR GRATINGS AND FRAMES
2.12 FLOOR PLATES
2.13 FOUNDATION VENTS
2.14 HANDRAILS
2.14.1 Steel Handrails, Including Carbon Steel Inserts
2.14.2 Aluminum Handrails
2.15 GUY CABLES
2.16 LADDERS
2.17 METAL GRID WALKWAYS
2.18 MIRROR FRAMES

2.19 MISCELLANEOUS
2.20 PARTITIONS, DIAMOND MESH TYPE
2.21 ROLL-UP FLOOR MATS
2.24 ROOF SCUTTLES
2.23 SAFETY CHAINS
2.24 SAFETY NOSING
2.25 SHELVING
2.26 STEEL STAIRS

2.27 STEEL DOOR FRAMES
2.28 TRENCH COVERS, FRAMES, AND LINERS
2.29 WHEELGUARDS
2.30 WINDOW GUARDS, BAR GRILLE TYPE
2.31 WINDOW GUARDS, DIAMOND MESH TYPE
2.32 WINDOW SUB-SILL
2.33 WINDOW WELLS

PART 3 EXECUTION

3.1 GENERAL INSTALLATION REQUIREMENTS
3.2 REMOVABLE ACCESS PANELS
3.3 INSTALLATION OF CHIMNEYS, VENTS, AND SMOKESTACKS
3.4 DOOR GUARD FRAME
3.5 INSTALLATION OF PIPE GUARDS
3.6 INSTALLATION OF DOWNSPOUT BOOTS
3.7 ATTACHMENT OF HANDRAILS
3.7.1 Installation of Steel Handrails
3.7.2 Installation of Aluminum Handrails
3.8 ERECTION OF GUY CABLES
3.9 INSTALLATION OF METAL GRID WALKWAYS
3.10 PARTITION POSTS AND OPENINGS
3.11 RECESSED FLOOR MATS
3.12 MOUNTING OF SAFETY CHAINS
3.13 INSTALLATION OF SAFETY NOSINGS
3.14 DOOR FRAMES
3.15 TRENCH FRAMES AND COVERS
3.16 INSTALLATION OF WHEEL GUARDS
3.17 BAR-GRILLE WINDOW GUARDS
3.18 DIAMOND MESH WINDOW GUARDS
3.19 INSTALLATION OF WINDOW WELLS

-- End of Section Table of Contents

SECTION 05500

MISCELLANEOUS METAL

PART 1 GENERAL

1.1 REFERENCES

The publications listed below form a part of this specification to the extent referenced. The publications are referred to in the text by basic designation only.

ALUMINUM ASSOCIATION (AA)

AMERICAN NATIONAL STANDARDS INSTITUTE (ANSI)

AMERICAN SOCIETY FOR TESTING AND MATERIALS (ASTM)

AMERICAN SOCIETY OF CIVIL ENGINEERS (ASCE)

AMERICAN WELDING SOCIETY (AWS)

COMMERCIAL ITEM DESCRIPTIONS (CID)

NATIONAL ASSOCIATION OF ARCHITECTURAL METAL MANUFACTURERS (NAAMM)

NATIONAL FIRE PROTECTION ASSOCIATION (NFPA)

1.2 SUBMITTALS

Government approval is required for submittals with a "G" designation; submittals not having a "G" designation are for information only. When used, a designation following the "G" designation identifies the office that will review the submittal for the Government. The following shall be submitted in accordance with Section 01330 SUBMITTAL PROCEDURES:

SD-02 Shop Drawings

Miscellaneous Metal Items; [_____], [_____].

Detail drawings indicating material thickness, type, grade, and class; dimensions; and construction details. Drawings shall include catalog cuts, erection details, manufacturer's descriptive data and installation instructions, and templates. Detail drawings for the following items: [_____]

SD-04 Samples

Miscellaneous Metal Items; [_____], [_____].

Samples of the following items: [_____]. Samples shall be full size, taken from manufacturer's stock, and shall be complete as required for installation in the structure. Samples may be installed in the work, provided each sample is clearly identified and its location recorded.

1.3 GENERAL REQUIREMENTS

The Contractor shall verify all measurements and shall take all field measurements necessary before fabrication. Welding to or on structural steel shall be in accordance with AWS D1.1. Items specified to be galvanized, when practicable and not indicated otherwise, shall be hot-dip galvanized after fabrication. Galvanizing shall be in accordance with ASTM A 123/A 123M, ASTM A 653/A 653M, or ASTM A 924/A 924M, as applicable. Exposed fastenings shall be compatible materials, shall generally match in color and finish, and shall harmonize with the material to which fastenings are applied. Materials and parts necessary to complete each item, even though such work is not definitely shown or specified, shall be included. Poor matching of holes for fasteners shall be cause for rejection. Fastenings shall be concealed where practicable. Thickness of metal and details of assembly and supports shall provide strength and stiffness. Joints exposed to the weather shall be formed to exclude water.

1.4 DISSIMILAR MATERIALS

Where dissimilar metals are in contact, or where aluminum is in contact with concrete, mortar, masonry, wet or pressure-treated wood, or absorptive materials subject to wetting, the surfaces shall be protected with a coat of bituminous paint or asphalt varnish.

1.5 WORKMANSHIP

Miscellaneous metalwork shall be well formed to shape and size, with sharp lines and angles and true curves. Drilling and punching shall produce clean true lines and surfaces. Welding shall be continuous along the entire area of contact except where tack welding is permitted. Exposed connections of work in place shall not be tack welded. Exposed welds shall be ground smooth. Exposed surfaces of work in place shall have a smooth finish, and unless otherwise approved, exposed riveting shall be flush. Where tight fits are required, joints shall be milled. Corner joints shall be coped or mitered, well formed, and in true alignment. Work shall be accurately set to established lines and elevations and securely fastened in place. Installation shall be in accordance with manufacturer's installation instructions and approved drawings, cuts, and details.

1.6 ANCHORAGE

Anchorage shall be provided where necessary for fastening miscellaneous metal items securely in place. Anchorage not otherwise specified or indicated shall include slotted inserts made to engage with the anchors, expansion shields, and power-driven fasteners when approved for concrete; toggle bolts and through bolts for masonry; machine and carriage bolts for steel; and lag bolts and screws for wood.

1.7 ALUMINUM FINISHES

Unless otherwise specified, aluminum items shall have [standard mill

finish.] [hand sanded or machine finish to a 240 grit.] [anodized finish.]

The thickness of the coating shall be not less than that specified for protective and decorative type finishes for items used in interior locations or architectural Class I type finish for items used in exterior locations in AA DAF-45. Items to be anodized shall receive a polished satin finish. [Aluminum surfaces to be in contact with plaster or concrete during construction shall be protected with a field coat conforming to CID A-A-344.]

1.8 SHOP PAINTING

Surfaces of ferrous metal except galvanized surfaces, shall be cleaned and shop coated with the manufacturer's standard protective coating unless otherwise specified. Surfaces of items to be embedded in concrete shall not be painted. Items to be finish painted shall be prepared according to manufacturer's recommendations or as specified.

PART 2 PRODUCTS

2.1 ACCESS DOORS AND PANELS

Doors and panels shall be flush type unless otherwise indicated. Frames for access doors shall be fabricated of not lighter than 1.52 mm (16 gauge) 16 gauge steel with welded joints and finished with anchorage for securing into construction. Access doors shall be a minimum of 350 by 500 mm 14 by

20 inches and of not lighter than 1.9 mm (14 gauge) 14 gauge steel, with stiffened edges, complete with attachments. Access doors shall be hinged to frame and provided with a flush face, screw driver operated latch. Exposed metal surfaces shall have a [baked enamel finish] [shop applied prime coat].

2.2 CHIMNEYS, VENTS, AND SMOKESTACKS

Chimneys and vents shall be designed and constructed in accordance with NFPA 211. Chimney connectors shall be formed of not lighter than 1.01 mm (20 gauge) 20 gauge galvanized steel. Stacks shall be designed and constructed to withstand a wind velocity of [_____] km/h mile/h in accordance with ASCE 7. Unlined stacks shall be constructed of black-steel plates not less than 5 mm 3/16 inchthick conforming to ASTM A 36/A 36M. Seams and joints shall be welded, except that an angle flange shall be provided for connection to the boiler, other equipment, and stack support.

2.3 CLEANOUT DOORS

Cleanout doors shall be [galvanized] [cast iron], shall be provided with frames, and unless otherwise indicated, shall be sized to match flues. The frames shall have a continuous flange and anchors for securing into masonry. The doors shall be smokeproof, hinged, and shall have fastening devices to hold the door closed.

2.4 COAL-HOPPER DOORS

Coal-hopper doors shall be constructed of [galvanized] [_____] steel plates and shapes and shall be complete with frame, stops, wall box, hinges, and hasp or locktype latch. Joints and attachments shall be welded.

2.5 CORNER GUARDS AND SHIELDS

Corner guards and shields for jambs and sills of openings and edges of platforms shall be steel shapes and plates anchored in masonry or concrete with welded steel straps or end weld stud anchors. Corner guards for use with glazed or ceramic tile finish on walls shall be formed of 1.6 mm 0.0625 inch thick corrosion-resisting steel with polished or satin finish, shall extend 1.5 m 5 feet above the top of cove base or to the top of the wainscot, whichever is less, and shall be securely anchored to the supporting wall. Corner guards on exterior shall be [galvanized] [_____].

2.6 DOOR GUARDS

Door guards shall be constructed of woven steel wire or expanded metal framed with structural steel shapes. Expanded metal guards shall be of 38 mm 1-1/2 inch No. 10 mesh, welded to 25 by 25 by 3 mm 1 by 1 by 1/8 inch angle frame. Woven-wire panel shall be of 10 gauge, 38 mm 1-1/2 inch mesh secured through weaving to 25 mm 1 inchchannel frame or around a 10 m3/8 inch round bar frame. Corners of frames shall be mitered and welded. Guards shall be sized as indicated.

2.7 PIPE GUARDS

Pipe guards shall be heavy duty steel pipe conforming to ASTM A 53, Type E or S, weight STD, black finish.

2.8 DOWNSPOUT BOOTS

Downspout boots shall be cast iron with receiving bells sized to fit downspouts.

2.9 EXPANSION JOINT COVERS

Expansion joint covers shall be constructed of extruded aluminum with anodized satin finish for walls and ceilings and with standard mill finish for floor covers and exterior covers. Plates, backup angles, expansion filler strip and anchors shall be designed as indicated. Expansion joint system shall provide a [_____] hour fire rating and [_____] mm inchmovement.

2.10 FIRE ESCAPES

Fire escapes shall be fabricated of steel shapes, shall have treads, platforms and railings as specified for steel stairs, and shall be complete with required fastenings and accessories. Fire escapes and accessories shall be [galvanized] [_____].

2.11 FLOOR GRATINGS AND FRAMES

[Carbon steel] [Aluminum] [Stainless steel] grating shall be designed in accordance with [NAAMM MBG 531] [NAAMM MBG 532] to meet the indicated load requirements. Edges shall be banded with bars 6 mm 1/4 inch less in height than bearing bars for grating sizes above 19 mm.3/4 inch. Banding bars shall be flush with the top of bearing grating. Frames shall be of welded steel construction finished to match the grating. Floor gratings and frames shall be [galvanized after fabrication] [_____].

2.12 FLOOR PLATES

Floor plates shall be 6 mm 1/4 inch thick, [raised thread steel.] [pattern indicated.] [galvanized.] [slip-resistant, carbon steel conforming to ASTM A 283/A 283M having a minimum static coefficient of friction of 0.50 when tested in accordance with ASTM D 2047. Wearing surface shall be aluminum oxide or silicon carbide.]

2.13 FOUNDATION VENTS

Foundation vents shall be the same size as the masonry units or sized as indicated, and shall be of extruded aluminum with integral water stop and sliding interior closer or damper operable from the outside. Insect screen shall be provided at the back of the vent. Louvered opening shall have top and bottom drip lips, and the net ventilating area with closer or damper open shall be at least 35 percent of the gross wall opening. The frames shall have a structural strength adequate to permit use in masonry walls without a lintel.

2.14 HANDRAILS

Handrails shall be designed to resist a concentrated load of 890 N (200 pounds) 200 pounds in any direction at any point of the top of the rail or 292 Newtons per meter (20 pounds per foot) 20 pounds per foot applied horizontally to top of the rail, whichever is more severe.

2.14.1 Steel Handrails, Including Carbon Steel Inserts

Steel handrails, including inserts in concrete, shall be [steel pipe conforming to ASTM A 53] [or] [structural tubing conforming to ASTM A 500, Grade A or B of equivalent strength]. Steel railings shall be [40] [50] mm [1-1/2] [2] inch nominal size. Railings shall be [hot-dip galvanized] [and] [shop painted]. Pipe collars shall be [steel.] [hot-dip galvanized steel.] [stainless steel.]

a. Joint posts, rail, and corners shall be fabricated by one of the following methods:

(1) Flush type rail fittings of commercial standard, welded and ground smooth with railing splice locks secured with 10 mm 3/8 inch hexagonal recessed-head setscrews.

(2) Mitered and welded joints by fitting post to top rail and intermediate rail to post, mitering corners, groove welding joints, and grinding smooth. Railing splices shall be butted and reinforced by a tight fitting interior sleeve not less than 150 mm 6 inches long.

(3) Railings may be bent at corners in lieu of jointing, provided bends are made in suitable jigs and the pipe is not crushed.

b. Removable sections, toe-boards, and brackets shall be provided as indicated.

2.14.2 Aluminum Handrails

Handrails shall consist of [[40] [50] mm [1-1/2] [2] inch nominal Schedule 40 pipe ASTM B 429] [44 mm 1-3/4 inch square aluminum semi-hollow tube with rounded corners ASTM B 221M ASTM B 221]. Railings and pipe collars shall be [mill finish] [anodized] [aluminum [_____] color]. All fasteners shall be Series 300 stainless steel.

a. Jointing shall be by one of the following methods:

(1) Flush type rail fittings, welded and ground smooth with splice locks secured with 10 mm 3/8 inch recessed head setscrews.

(2) Mitered and welded joints, made by fitting post to top rail and intermediate rail to post and corners, shall be groove welded and ground smooth. Splices, where allowed by the Contracting Officer, shall be butted and reinforced by a tight fitting dowel or sleeve not less than 150 mm 6 inches in length. Dowel or

sleeve shall be connected to one side of the splice by tack welding or by using epoxy cement.

(3) Railings shall be assembled using slip-on aluminum-magnesium alloy fittings for joints. Fittings shall be fastened to pipe or tube with 6 mm 1/4 inch or 10 mm 3/8 inch stainless steel recessed head setscrews. Assembled railings shall be provided with fittings only at vertical supports or at rail terminations attached to walls. Expansion joints shall be at the midpoint of panels. A setscrew shall be provided in only one side of the slip-on sleeve. Alloy fittings shall conform to ASTM B 26/B 26M.

b. Removable sections, toe-boards and brackets shall be provided where indicated, using flange castings as appropriate.

2.15 GUY CABLES

Guy cables shall be prestretched, galvanized wire rope of the sizes indicated. Wire rope shall conform to ASTM A 475, high strength grade with Class A coating. Guys shall have a factory attached clevis top-end fitting; guys shall have a factory attached open-bridge strand socket bottom-end fitting; guys shall be complete with oval eye, threaded anchor rods. Fittings and accessories shall be hot-dip galvanized.

2.16 LADDERS

Ladders shall be [galvanized] [_____] steel or aluminum, fixed rail type in accordance with ANSI A14.3.

2.17 METAL GRID WALKWAYS

Metal grid walkways shall be designed to protect rooftops from pedestrian traffic and shall be [2.0 mm (14 gauge)14 gauge minimum galvanized steel] [2.0 mm (12 gauge) 12 gauge minimum aluminum]. The walkway shall consist of metal planks, 610 by 3050 or 3650 mm, 2 by 10 or 12 feet, bolted or welded to support stands. Other sizes may be furnished if approved. In addition to end supports, a midspan support shall be provided when required to limit deflection. End supports shall be located to avoid uplift and to provide continuous runs.

2.18 MIRROR FRAMES

Frames for plate glass mirrors larger than 450 by 750 mm 18 by 30 inches shall be fabricated from [extruded aluminum with anodized finish.] [corrosion-resisting steel with satin finish.] Frames shall be provided with concealed fittings and tamperproof mountings.

2.19 MISCELLANEOUS

Miscellaneous plates and shapes for items that do not form a part of the structural steel framework, such as lintels, sill angles, miscellaneous mountings, and frames, shall be provided to complete the work.

2.20 PARTITIONS, DIAMOND MESH TYPE

Partitions shall be constructed of metal fabric attached to structural steel framing members. Fabric shall be [10 gauge steel wires woven into 38 mm 1-1/2 inch diamond mesh with wire secured through weaving channels.] [expanded metal conforming to ASTM F 1267 of 38 mm, 1-1/2 inch, No. 10 diamond mesh secured to channel frame by welding.] [8 gauge steel wires woven into 50 mm 2 inch diamond mesh with wire secured through weaving channels.] Framing members shall be channels 38 by 3 mm 1-1/2 by 1/8 inch minimum size. Channel frames shall be mortised and tenoned at intersections. Steel frames, posts, and intermediate members shall be of the sizes and shapes indicated. Cast-iron floor shoes and caps shall have setscrew adjustment. Doors and grilles shall be provided as indicated, complete with hardware and accessories including sliding mechanisms, locks, guard plates, sill shelves and brackets, and fixed pin butts. Doors and grilles shall have cover plates as indicated. Dutch doors shall have a lock for each leaf. A continuous rubber bumper shall be provided at bottom of grille frame. Locks shall be bronze, cylinder, mortise type. Keying shall be coordinated with Section 08700 BUILDERS' HARDWARE. Ferrous metal portions of partitions and accessories shall be [galvanized] [_____].

2.21 ROLL-UP FLOOR MATS

Roll-up mats shall be of aluminum construction with [carpet] [vinyl] [serrated aluminum] [abrasive] surface. Roll-up mats shall be for use in [level surface area.] [recessed area. Construction details of recessed areas shall be shown on the drawings.]

2.24 ROOF SCUTTLES

Roof scuttles shall be of [aluminum] [galvanized steel not less than 2.0 mm (14 gauge), 14 gauge,] with 75 mm 3 inch beaded flange welded and ground at corners. Scuttle shall be sized to provide minimum clear opening of 940 by 760 mm.37 by 30 inches. Cover and curb shall be insulated with 25 mm 1 inch thick rigid insulation covered and protected by [aluminum sheet] [galvanized steel liner not less than 0.55 mm (26 gauge).26 gauge.] The curb shall be equipped with an integral metal cap flashing of the same gauge and metal as the curb, full welded and ground at corners for weathertightness. Scuttle shall be completely assembled with heavy hinges, compression spring operators enclosed in telescopic tubes, positive snap latch with turn handles on [inside] [and] [outside] and neoprene draft seal. Fasteners shall be provided for padlocking on the inside. The cover shall be equipped with an automatic hold-open arm complete with handle to permit one hand release.

2.23 SAFETY CHAINS

Safety chains shall be galvanized welded steel, proof coil chain tested in accordance with ASTM A 467/A 467M, Class CS. Safety chains shall be straight link style, 5 mm 3/16 inch diameter, minimum 39 links per meter (12 links per foot) 12 links per foot and with bolt type snap hooks on each end. Eye bolts for attachment of chains shall be galvanized 10 mm 3/8 inch bolt with 19 mm 3/4 inch eye, anchored as indicated. Two chains shall be furnished for each guarded opening.

2.24 SAFETY NOSING

Safety nosings shall be of [cast iron] [cast aluminum] with [cross-hatched] [plain], abrasive surface. Nosing shall be 75 mm 3 inches wide and terminating at not more than 150 mm 6 inches from the ends of treads, except nosing for metal pan cement-filled treads shall extend the full length of the tread. Safety nosings shall be provided with anchors not less than 19 mm 3/4 inch long. Integrally cast mushroom anchors are not acceptable.

2.25 SHELVING

Shelving shall conform to ANSI MH28.1 and shall be [bolted] [clipped] [open] [closed] and capable of resisting a uniform load of [_____] kg per meter.lbs per foot. Minimum dimensions and number of shelves shall be as indicated.

2.26 STEEL STAIRS

Steel stairs shall be complete with structural or formed channel stringers, [steel plate treads and risers,] [metal pan cement-filled treads,] [grating treads,] [slip-resistant metallic treads,] landings, columns, handrails, and necessary bolts and other fastenings as indicated. Structural steel shall conform to ASTM A 36/A 36M. Stairs and accessories shall be [galvanized] [_____]. Risers on stairs with metal pan treads shall be deformed to form a sanitary cove to retain the tread concrete. Integral nosings shall have braces extended into the concrete fill. Gratings for treads and landings shall conform to NAAMM MBG 531. Grating treads shall have slip-resistant nosings.

2.27 STEEL DOOR FRAMES

Steel door frames built from structural shapes shall be neatly mitered and securely welded at the corners with all welds ground smooth. Jambs shall be provided with 50 by 6 by 300 mm 2 by 1/4 by 12 inch bent, adjustable metal anchors spaced not over 760 mm 2 feet 6 inches on centers. Provision shall be made to stiffen the top member for all spans over 900 mm.3 feet. Continuous door stops shall be made of 38 by 16 mm 1-1/2 by 5/8 inch bars.

2.28 TRENCH COVERS, FRAMES, AND LINERS

Trench covers shall be designed to meet the indicated load requirements. Trench frames and anchors shall be all welded steel construction designed to match cover. Covers shall [be secured to frame] [have flush drop handles formed of 6 mm 1/4 inch round stock], and shall be [raised-tread, or steel floor plate] [cast-iron grating]. Grating opening widths shall not exceed 25 mm.1 inch. Trench liners shall be cast iron with integral frame for cover.

2.29 WHEELGUARDS

Wheelguards shall be hollow, heavy duty, cast iron [half round] [three quarters round], at least 450 mm 18 inches high designed to provide a minimum of 150 mm 6 inches of protection.

2.30 WINDOW GUARDS, BAR GRILLE TYPE

Bar grill window guards shall be of 19 mm 3/4 inch round bars, spaced not over 100 mm 4 inches on centers vertically, and 50 by 13 mm 2 by 1/2 inch horizontal bars spaced not over 300 mm 12 inches on centers. Vertical bars shall be extended through and securely welded to the cross bars. Horizontal bars shall be extended, bent, and drilled as shown for anchorage at jambs of window openings.

2.31 WINDOW GUARDS, DIAMOND MESH TYPE

Diamond mesh window guards shall be constructed of woven steel wire or expanded metal frames with hot-rolled or cold-formed steel shapes. Expanded metal conforming to ASTM F 1267 shall be of 38 mm, 1-1/2 inch, No. 10 mesh, welded to 25 by 25 by 3 mm 1 by 1 by 1/8 inchangle frame. Woven-wire panels shall be of 10 gauge, 38 mm 1-1/2 inch mesh secured through weaving bar to 10 mm 3/8 inch round or 25 mm 1 inch channel frame. Corners of frames shall be mitered and welded or mortised and tenoned. One tamperproof hasp and padlock, with access from the interior, shall be provided for each butt used.

2.32 WINDOW SUB-SILL

Window sub-sill shall be of extruded aluminum alloy of size and design indicated. Not less than two anchors per window section shall be provided for securing into mortar joints of masonry sill course. Sills for banks of windows shall have standard mill finish with a protective coating, prior to shipment, of two coats of a clear, colorless, methacrylate lacquer applied to all surfaces of the sills.

2.33 WINDOW WELLS

Window wells shall be not lighter than 1.5 mm (16 gauge), 16 gauge, corrugated sheet steel, hot-dip galvanized after fabrication. Top edge of walls shall have a 19 mm 3/4 inch bead or rolled top. Window wells shall be semicircular or semielliptical in form and shall overlap the window by at least 75 mm 3 inches on each side. Removable cover, hot-dip galvanized after fabrication, consisting of steel bar grate with bars spaced at not more than 50 mm 2 inch centers and welded to 25 by 6 mm 1 by 1/4 inch frame shall be designed to fit into and rest on top edge of window well.

PART 3 EXECUTION

3.1 GENERAL INSTALLATION REQUIREMENTS

All items shall be installed at the locations shown and according to the manufacturer's recommendations. Items listed below require additional procedures as specified.

3.2 REMOVABLE ACCESS PANELS

A removable access panel not less than 300 by 300 mm 12 by 12 inches shall be installed directly below each valve, flow indicator, damper, or air

splitter that is located above the ceiling, other than an acoustical ceiling, and that would otherwise not be accessible.

3.3 INSTALLATION OF CHIMNEYS, VENTS, AND SMOKESTACKS

Chimneys and vents shall be installed in accordance with NFPA 211. A cleanout opening with a tight-fitting, hinged, cast-iron door and frame shall be provided at the base of each smokestack. A top band shall be provided on stacks for attachment of painter's rigging. Roof housing, rain cap, downdraft diverter, fire damper, and other accessories required for a complete installation shall be provided. Sections of prefabricated lined stacks shall be joined with acid-resisting high-temperature cement and steel draw bands. Means to prevent accumulation of water in the smokestack shall be provided.

3.4 DOOR GUARD FRAME

Door guard frame shall be mounted over the glazed opening using 6 mm 1/4 inch lag bolts on the interior of wood doors or tamperproof through bolts on the interior of metal doors.

3.5 INSTALLATION OF PIPE GUARDS

Pipe guards shall be set vertically in concrete piers. Piers shall be constructed of, and the hollow cores of the pipe filled with, concrete [specified in SECTION 03300 CAST-IN-PLACE STRUCTURAL CONCRETE.] [having a compressive strength of 21 MPa.3000 psi.]

3.6 INSTALLATION OF DOWNSPOUT BOOTS

Downspouts shall be secured to building through integral lips with appropriate fasteners.

3.7 ATTACHMENT OF HANDRAILS

Toeboards and brackets shall be installed where indicated. Splices, where required, shall be made at expansion joints. Removable sections shall be installed as indicated.

3.7.1 Installation of Steel Handrails

Installation shall be [in pipe sleeves embedded in concrete and filled with molten lead or sulphur with anchorage covered with standard pipe collar pinned to post.] [by means of pipe sleeves secured to [wood with screws.] [masonry with expansion shields and bolts or toggle bolts.] [base plates bolted to stringers or structural steel framework.]] Rail ends shall be secured by steel pipe flanges [anchored by expansion shields and bolts.] [through-bolted to a back plate or by 6 mm 1/4 inch lag bolts to studs or solid backing.]

3.7.2 Installation of Aluminum Handrails

Installation shall be by means of [flanges anchored to concrete or masonry by expansion shields] [base plates or flanges bolted to stringers or structural steel framework] [flanges through-bolted to a back plate or by 6

mm 1/4 inch lag bolts to studs or other structural members]. Bolts used to anchor aluminum alloy flanges shall be stainless steel of a size appropriate to the standard product of the manufacturer. Where aluminum or alloy fittings or extrusions are to be in contact with dissimilar metals or portland cement concrete, the contact surface shall be given a heavy coating of bituminous paint or asphalt varnish.

3.8 ERECTION OF GUY CABLES

Guy cables shall be erected as indicated. Anchor rods shall be cast in concrete located and reinforced as shown.

3.9 INSTALLATION OF METAL GRID WALKWAYS

Walkways shall be installed after final flood coat and aggregate surfacing. Each stand shall be set on a protective pad; the pad may be adhesively attached to the bottom of the stand or set loose under the stand. The area where the supports are to be located shall be swept clear of loose aggregate. Protective pad shall be placed on the roof membrane except on inverted roofs where the protective pad shall be set on the rigid insulation.

3.10 PARTITION POSTS AND OPENINGS

Posts shall be set in shoes bolted to the floor and in caps tap-screwed to clip angles in overhead construction, as indicated. Openings shall be formed using channels similar to the partition frames at ducts, pipes, and other obstructions.

3.11 RECESSED FLOOR MATS

Contractor shall verify field measurements prior to releasing materials for fabrication by the manufacturer. A mat frame shall be used to ensure recess accuracy in size, shape and depth. Drain pit shall be formed by blocking out concrete when frames are installed. Pit shall be dampproofed after concrete has set. Frames shall be assembled onsite and installed so that upper edge will be level with finished floor surface. A cement base shall be screeded inside the mat recess frame area using the edge provided by the frame as a guide. The frame shall be anchored into the cement with anchor pins a minimum of 610 mm 24 inches on centers.

3.12 MOUNTING OF SAFETY CHAINS

Safety chains shall be mounted 1070 mm 3 feet 6 inches and 610 mm 2 feet above the floor.

3.13 INSTALLATION OF SAFETY NOSINGS

Nosing shall be completely embedded in concrete before the initial set of the concrete occurs and shall finish flush with the top of the concrete surface.

3.14 DOOR FRAMES

Door frames shall be secured to the floor slab by means of angle clips and expansion bolts. Continuous door stops shall be welded to the frame or tap screwed with countersunk screws at no more than 450 mm 18 inchcenters, assuring in either case full contact with the frame. Any necessary reinforcements shall be made and the frames shall be drilled and tapped as required for hardware.

3.15 TRENCH FRAMES AND COVERS

Trench frames and covers shall finish flush with the floor.

3.16 INSTALLATION OF WHEEL GUARDS

Wheel guards shall be filled with concrete and anchored to the floor or the building according to the manufacturer's recommendations.

3.17 BAR-GRILLE WINDOW GUARDS

Bar-grille window guards shall be securely anchored to masonry with 13 mm 1/2 inch diameter prison-type screws or bolts and expansion shields, or other type of fastenings if the ends of such fastenings are welded to the adjoining metal grilles or otherwise made tamperproof in a satisfactory manner. Spanner-head screws or bolts are not considered prison-type fasteners.

3.18 DIAMOND MESH WINDOW GUARDS

Diamond mesh window guards shall be mounted on [interior window frame with not less than two tamperproof hinged butts mounted on wood jambs.] [exterior of window frame with not less than two tamperproof hinged butts mounted on 25 by 300 by 3 mm 1 by 12 by 1/8 inch jamb channel attached as indicated to 50 by 6 mm 2 by 1/4 inch plate anchored to wood jamb with 6 mm 1/4 inch lag bolt, to masonry jamb with toggle bolts, or to concrete jambs and solid masonry jambs with expansion shields and bolts.] One additional butt shall be provided for each 900 mm 3 foot internal length of guard over 1500 mm.5 feet. Hasp and padlock shall be installed on the jamb opposite to that hinged.

3.19 INSTALLATION OF WINDOW WELLS

Window wells shall be placed as shown with the walls securely anchored to foundation surface. The area within the well shall be excavated to the bottom of the well and covered with a 100 mm 4 inch thick layer of coarse gravel or crushed rock.

-- End of Section --

SECTION TABLE OF CONTENTS

DIVISION 09 - FINISHES

SECTION 09200

LATHING AND PLASTERING

PART 1 GENERAL

1.1 REFERENCES
1.2 SUBMITTALS
1.3 QUALIFICATIONS
1.4 DELIVERY, STORAGE AND HANDLING
1.5 ENVIRONMENTAL CONDITIONS

PART 2 PRODUCTS

2.1 NON-LOADBEARING WALLS
2.1.1 Studs
2.1.2 Runner Tracks
2.2 LOADBEARING STUD WALLS
2.2.1 Studs
2.2.2 Runner Tracks
2.2.3 Bridging
2.3 METAL WALL FURRING
2.4 SUSPENDED CEILING FRAMING
2.5 TRIM, MOLDINGS, AND ACCESSORIES
2.5.1 Hangers
2.5.2 Fastenings
2.5.2.1 Tie Wire
2.5.2.2 Clips
2.5.3 Arch, Flexible Corner Beads
2.5.4 Expanded Flange Corner Beads
2.5.5 Bullnose Corner Beads
2.5.6 Cornerites
2.5.7 Striplath
2.5.8 Base or Parting Screed
2.5.9 Casing Beads
2.5.10 Control Joints
2.5.11 Reveal Molding
2.5.12 Raidused Column Trim
2.5.13 Screws
2.6 METAL LATH
2.6.1 Expanded Metal Lath
2.6.2 Welded Wire Lath
2.6.3 Woven Wire Lath
2.7 GYPSUM LATH AND VENEER PLASTER BASE
2.7.1 Gypsum Lath

2.7.2 Veneer Plaster Base
2.8 GYPSUM PLASTER
2.8.1 Ready-Mixed Gypsum Plaster
2.8.2 Gypsum Neat Plaster
2.8.3 Gypsum Wood-Fibered Plaster
2.8.4 Gypsum Gauging Plaster for Finish Coats
2.9 CEMENT PLASTER MATERIALS
2.9.1 Portland Cement
2.9.2 Aggregates
2.9.3 Water
2.9.4 Lime
2.10 WALL OPENING FRAMES

PART 3 EXECUTION

3.1 PREPARATION
3.2 SUSPENDED CEILING FRAMING INSTALLATION
3.2.1 Hangers
3.2.2 Main Runners
3.2.3 Furring Channels
3.2.4 Light Fixtures and Air Diffusers
3.3 FURRED CEILING FRAMING INSTALLATION
3.4 WALL FRAMING INSTALLATION
3.4.1 Loadbearing Wall Framing
3.4.2 Non-Loadbearing Wall Framing
3.4.3 Adjoining Walls and Columns
3.4.4 Wall Bracing
3.4.5 Corners and Intersection
3.4.6 Wall Openings
3.4.7 Bucks, Anchors and Blocking
3.5 WALL FURRING INSTALLATION
3.6 SINGLE/DOUBLE CHANNEL, AND STUDLESS SOLID PARTITION INSTALLATION
3.7 LATHING INSTALLATION
3.7.1 Metal Lath on Vertical Surfaces
3.7.2 Metal Lath on Ceilings
3.7.3 Side and End Laps
3.7.4 Chases and Recesses
3.7.5 Installation of Gypsum Lath
3.8 INSTALLATION OF GYPSUM BASE TO RECEIVE VENEER PLASTER
3.9 OPENINGS
3.9.1 Steel Frames
3.9.2 Wood Frames
3.9.3 Ceiling Openings
3.9.4 Openings in Hollow Partitions
3.9.5 Openings in Partitions Not To Structure
3.9.6 Cross Bracing
3.10 INSTALLATION OF TRIM, MOLDINGS, AND ACCESSORIES
3.10.1 Base Screeds
3.10.2 Corner Beads
3.10.3 Cornerites

3.10.4 Casing Beads
3.10.5 Expansion and Control Joint Beads
3.10.6 Trim
3.11 PLASTER THICKNESS AND SURFACE EVENNESS
3.11.1 Grounds and Screeds
3.11.2 Plaster Screeds
3.12 PLASTER GROUT
3.13 PROPORTIONS AND MIXING
3.13.1 Portland Cement Plaster Base Coat
3.13.2 Lime-Putty Finish
3.13.3 Prepared-Gypsum Finish
3.13.4 Keene's Cement Finish
3.13.5 High-Strength Gypsum Finish
3.13.6 Portland Cement-Plaster Finish
3.14 MACHINE APPLICATION
3.15 QUALITY CONTROL
3.16 APPLICATION OF FINISHES
3.16.1 Interior Gypsum Plaster
3.16.2 Gypsum Veneer Plaster
3.16.3 Lime-Putty Finish
3.16.4 Prepared-Gypsum Finish
3.16.5 Keene's Cement Finish and High Strength Gypsum-Plaster Finish
3.16.6 Portland Cement-Based Plaster
3.17 PATCHING
3.18 SAMPLES OF COMPLETED WORK

-- End of Section Table of Contents --

SECTION 09200

LATHING AND PLASTERING

PART 1 GENERAL

1.1 REFERENCES

The publications listed below form a part of this specification to the extent referenced. The publications are referred to in the text by basic designation only.

AMERICAN SOCIETY FOR TESTING AND MATERIALS (ASTM)

1.2 UBMITTALS

Government approval is required for submittals with a "G" designation; submittals not having a "G" designation are for information only. When used, a designation following the "G" designation identifies the office that will review the submittal for the Government. The following shall be submitted in accordance with Section 01330 SUBMITTAL PROCEDURES:

SD-02 Shop Drawings

Approved Detail Drawings; [_____], [_____]

Drawings including installation details, ceiling framing, and furring.

SD-03 Product Data

Lathing Installation; [_____], [_____]

Manufacturer's pre-printed descriptive data, catalog cuts, and installation instructions for plastering materials and accessories.

SD-04 Samples

Gypsum Plaster; [_____], [_____]

[One] [_____] 1 m 36 inch square sample panel of each specified finish.

SD-07 Certificates

Qualifications; [_____], [_____]

Manufacturer's experience in specified work.

Gypsum Plaster; [____], [____]

Certification indicating that factory-mixed plaster provides a minimum compressive strength of not less than 6.9 MPa (1000 psi) 1000 psi when tested in accordance with ASTM C 472.

1.3 QUALIFICATIONS

Manufacturer shall specialize in manufacturing the types of material specified, and shall have a minimum of [5] [_____] years of documented successful experience. Applicator shall specialize in the type of lath and plaster work required to meet requirements, with a minimum of [3] [_____] years of documented experience.

1.4 DELIVERY, STORAGE AND HANDLING

Materials shall be delivered to project site in the original containers bearing the name of manufacturer, contents, and brand name. Plaster, cement, and lime shall be stored off the ground under weathertight cover and away from sweating walls and other damp surfaces until ready for use. Accessories shall be stored off the ground in a weathertight structure for protection. Damaged or deteriorated materials shall be removed from project site.

1.5 ENVIRONMENTAL CONDITIONS

A temperature between 4 degrees C 40 degrees F and 27 degrees C 80 degrees F shall be evenly maintained in the building for a period of not less than 1 week prior to application of plaster, and for a period of at least 1 week after the gypsum plaster is set, in accordance with ASTM C 842. Interior spaces shall be ventilated in accordance with ASTM C 842 immediately after applying plaster.

PART 2 PRODUCTS

2.1 NON-LOADBEARING WALLS

2.1.1 Studs

Studs for non-loadbearing walls shall conform to ASTM C 645. Studs shall be C-shaped, roll-formed steel with minimum uncoated design thickness of [0.45 mm (0.0179 in)0.0179 in][0.72 mm (0.0284 in) 0.0284 in][0.84 mm (0.0329 in) 0.0329 in] [_____] made from G40 hot-dip galvanized coated sheet.

2.1.2 Runner Tracks

Prefabricated floor and ceiling runner tracks shall conform to ASTM C 645. Tracks shall be prefabricated, U-shaped, unpunched web, thickness to match studs, made from G40 hot-dip galvanized coated sheet.

2.2 LOADBEARING STUD WALLS

2.2.1 Studs

Studs for loadbearing walls shall conform to ASTM C 955. Studs shall be C-shaped, roll-formed steel made from minimum G60 hot-dip galvanized coated sheet. Stud sizes and base metal design thickness shall be as shown.

2.2.2 Runner Tracks

Floor and ceiling runner tracks shall conform to ASTM C 955. Tracks shall be prefabricated, U-shaped with minimum 19 mm 3/4 inch flanges, unpunched web, made from G60 hot-dip galvanized coated sheet.

2.2.3 Bridging

Bridging in loadbearing walls shall conform to ASTM C 955. Bridging shall be minimum 19 mm 3/4 inch wide x 11 mm 7/16 inch deep cold-rolled steel channel with weld attachment clips at each stud location or V-bar type weld or screw attached to each stud flange. Bridging shall be adequate to provide lateral support for the stud.

2.3 METAL WALL FURRING

Metal wall furring channels shall conform to ASTM C 645. Furring channels shall be formed from cold-rolled steel, 19 mm 3/4 inch wide x 11 mm 7/16 inch deep, made from G40 hot-dip galvanized coated sheet.

2.4 SUSPENDED CEILING FRAMING

Suspended ceiling framing system shall have the capability to support the finished ceiling, light fixtures, air diffusers, and accessories, as shown. The suspension system shall have a maximum deflection of L/240. Carrying channels shall be formed from minimum 1.40 mm thick (0.0548 in) 0.0548 in cold-rolled steel, 38 mm 1-1/2 inch wide x 11 mm 7/16 inch deep. Cross furring members shall conform to ASTM C 645, and shall be formed from cold-rolled steel, 19 mm 3/4 inch wide x 11 mm 7/16 inch deep. Carrying channels and furring members shall be made from hot-dip galvanized coated sheet.

2.5 TRIM, MOLDINGS, AND ACCESSORIES

2.5.1 Hangers

Suspended ceiling runner channel hangers shall be [soft, annealed steel wire not less than No. 8 SWG nominal diameter, conforming to ASTM A 853] [or] [flat iron or steel straps, at least 2 x 22 mm 3/32 x 7/8 inch size, coated with zinc, cadmium, or rust-inhibiting paint].

2.5.2 Fastenings

Tie wire, rings, and other fastenings shall be corrosion-resisting steel conforming to ASTM A 580/A 580M, composition 302, 304, or 316, Condition A, or nickel-copper alloy conforming to ASTM B 164, annealed condition. Walls, partitions, and other vertical surfaces not incorporated in ceiling construction may be erected with soft, annealed steel conforming to ASTM A 853.

2.5.2.1 Tie Wire

Tie wire for constructing partitions and vertical furring, for securing metal lath to supports, and for lacing shall be not less than No. 18 SWG diameter. Tie wire for all other applications shall be not less than No. 16 SWG diameter.

2.5.2.2 Clips

Clips used in lieu of tie wire for securing furring channels to the runner channels in ceiling construction shall be made from strips not less than 3 mm 1/8 inch thick or shall be hairpin clip formed of No. 8 SWG wire. Other clips and rings or fastenings of similar materials shall be equivalent in holding power to that provided by tie wire for the specific application.

2.5.3 Arch, Flexible Corner Beads

Flexible corner beads shall be fabricated of [aluminum][vinyl] [0.50 mm thick (0.0210 in) 0.0210 in galvanized steel] 0.76 mm (0.030 inch) [for][0.030 inch thick zinc alloy], with minimum 32 mm 1-1/4 inch wide flanges and 3 mm 1/8 inch thick bead, designed to bend without buckles, kinks, or breaks in the nose.

2.5.4 Expanded Flange Corner Beads

Expanded flange corner beads shall be fabricated of [vinyl] [or] [aluminum][0.50 mm thick (0.0210 in) 0.0210 in galvanized steel][0.76 mm (0.030 inch) 0.030 inch thick zinc alloy], with 64 mm 2-1/2 inch wide flanges and 3 mm 1/8 inch wide bead.

2.5.5 Bullnose Corner Beads

Bullnose corner beads shall be fabricated of [vinyl] [or] [aluminum][0.50 mm thick (0.0210 in) 0.0210 in galvanized steel], with 64 mm 2-1/2 inch wide flanges and 20 mm 3/4 inch bead.

2.5.6 Cornerites

Cornerites shall conform to ASTM C 847. Cornerites shall be fabricated of galvanized expanded metal lath to form an angle of at least 100 degrees, with outstanding legs of not less than 50 mm 2 inches.

2.5.7 Striplath

Striplath shall conform to ASTM C 847. Striplath shall be fabricated of galvanized steel sheet, 1.4 kg per square meter. 2.5 pounds per square yard.

2.5.8 Base or Parting Screed

Base screeds shall be fabricated of 0.50 mm thick (0.0210 in) 0.0210 in galvanized steel, 13 mm 1/2 inch depth, with not less than 50 mm 2 inch wide expansion flanges.

2.5.9 Casing Beads

Casing beads shall be fabricated of [vinyl] [galvanized 0.70 mm (0.0276 inch) 0.0276 inch thick steel] [13][19] mm [1/2][3/4] inch depth, [25][50] mm [1][2] inch wide expansion wings, front edge of face flange shaved for intended use, back slightly arched to provide a spring effect.

2.5.10 Control Joints

Control joints shall be designed for expansion and contraction of plaster work due to thermal exposure. Control joints shall be fabricated of [vinyl][0.55 mm (0.0217 inch) 0.0217 inch thick galvanized steel for interior applications][or][0.76 mm (0.030 inch) 0.030 inch thick zinc alloy for exterior applications], with perforated or expanded-metal wings.

2.5.11 Reveal Molding

Reveal moldings shall be fabricated of [aluminum] [vinyl] [galvanized steel] [or] [zinc]. reveal molding shall be size and shape as shown.

2.5.12 Raidused Column Trim

Raidused column moldings shall be fabricated of aluminum and shall be shape and sizes as shown.

2.5.13 Screws

Self-drill steel screws shall conform to ASTM C 1002. Screws shall be [Type S for use with steel framing] [and] [Type W for use with wood members].

2.6 METAL LATH

2.6.1 Expanded Metal Lath

Expanded metal lath shall conform to ASTM C 847. Lath shall be [flat base lath] [self-furring lath] [flat rib lath] [rib lath], expanded from cold-rolled carbon sheet steel of commercial quality, coated with rust-inhibitive paint after fabrication, 1.8 kg per square meter 3.4 pounds per square yard, [with backing] [without backing].

2.6.2 Welded Wire Lath

Welded wire lath shall conform to ASTM C 933. Lath shall be [flat base] [self-furring] type, fabricated from not less than 1.6 mm (0.0625 inch) 0.0625 inch copper-bearing, cold-drawn, galvanized steel wire, [with backing] [without backing].

2.6.3 Woven Wire Lath

Woven wire lath shall conform to ASTM C 1032. Lath shall be [flat base] [self-furring] type [with stiffeners] [without stiffeners], [with backing] [without backing] fabricated from copper-bearing, cold-drawn, galvanized steel wire not less than 1.40 mm (0.0548 in) 0.0548 in, thick with openings not to exceed 50 x 50 mm 2 x 2 inch welded.

2.7 GYPSUM LATH AND VENEER PLASTER BASE

2.7.1 Gypsum Lath

Gypsum lath shall conform to ASTM C 37. Lath shall be [plain] [aluminum foil backed] [Type X] [lead-backed for control of X-ray transmission] designed to be used as a base for gypsum plaster.

2.7.2 Veneer Plaster Base

Veneer plaster base shall conform to ASTM C 588. Base shall be [aluminum foil backed] [Type X], and shall be designed to be used as a base for gypsum veneer plaster.

2.8 GYPSUM PLASTER

2.8.1 Ready-Mixed Gypsum Plaster

[Ready-mixed plaster for use over gypsum or metal lath shall conform to ASTM C 28 for the following: ready-mixed plaster with vermiculite aggregate; ready-mixed plaster with perlite aggregates; ready-mixed plaster with sand aggregate.] [Ready-mixed gypsum plaster for use over masonry bases shall conform to ASTM C 28 for plaster with vermiculite aggregate.] [Ready-mixed plaster for use over veneer plaster bases shall conform to ASTM C 587.]

2.8.2 Gypsum Neat Plaster

Gypsum neat plaster shall conform to ASTM C 28.

2.8.3 Gypsum Wood-Fibered Plaster

Gypsum wood-fibered plaster shall conform to ASTM C 28.

2.8.4 Gypsum Gauging Plaster for Finish Coats

Gypsum gauging plaster shall conform to ASTM C 28. Keene's quick-set cement for finish coats shall conform to ASTM C 61.

2.9 CEMENT PLASTER MATERIALS

2.9.1 Portland Cement

Portland cement shall conform to ASTM C 150, [gray portland cement Type [I], [II], [III]] [white portland cement Type [I] [II]] with 13 mm1/2 inch chopped alkali-resistant fiberglass strands or polypropylene fibers, minimum 680 g 1-1/2 pounds per sack of cement.

2.9.2 Aggregates

The unit weight of aggregates shall be determined in accordance with ASTM C 29/C 29M. Gypsum aggregates shall conform to ASTM C 35. Portland cement based plaster aggregates shall conform to ASTM C 897, except that the gradation of natural or manufactured sand for portland-cement plaster shall be as follows:

Sieve Size	Sand, Percentage by Weight Retained on Each Sieve	
	Maximum (mm)	Minimum
	4.75	0 --
	2.36	8 2
	1.18	38 22
	0.60	78 52

Sieve Size	Sand, Percentage by Weight Retained on Each Sieve	
	Maximum (mm)	Minimum
	0.30	97 65
	0.15	100 97

Sieve Size	Sand, Percentage by Weight Retained on Each Sieve	
	Maximum (inches)	Minimum
	4	0 --
	8	8 2
	16	38 22
	30	78 52
	50	97 65
100	100	97

2.9.3 Water

Water shall be clean, fresh, potable, and free from injurious amounts of oils, acids, alkalis and organic matter injurious to the plaster and to any metal in the system.

2.9.4 Lime

Lime shall conform to ASTM C 206, [Type N-Normal hydrated finishing lime] [Type S-Special hydrated finishing lime] suitable for use in scratch brown and finish coats of portland-cement plaster.

2.10 WALL OPENING FRAMES

Steel frames for wall openings for doors, pass-through openings, and access panels shall be as specified in Section 08110 STEEL DOORS AND FRAMES or Section 05500 MISCELLANEOUS METAL. Wood frames, wood bucks, and blocking for wall openings for doors, pass-through openings, and access panels shall be as specified in Section 06100 ROUGH CARPENTRY.

PART 3 EXECUTION

3.1 PREPARATION

Project conditions shall be verified as ready to receive the work. Field measurements shall be verified for compliance with approved detail drawings and manufacturer's published recommendations. Beginning of installation means installer accepts existing conditions.

3.2 SUSPENDED CEILING FRAMING INSTALLATION

Suspended system shall be installed in accordance with ASTM C 841. Where channels are spliced, the ends shall be overlapped not less than 300 mm 12 inches for 38 mm 1-1/2 inch channels and not less than 200 mm 8 inches for 20 mm 3/4 inch channels with flanges of channels interlocked and securely tied near each end of the splice with two loops of the tie wire. Splices shall be staggered.

3.2.1 Hangers

Wire or strap hangers shall be attached to structural members in accordance with ASTM C 841, except hangers shall be spaced not more than 1220 mm 48 inches along runner channels and 900 mm 36 inches in the other direction or 1050 mm 42 inches in both directions unless otherwise indicated or approved. Locations of hangers shall be coordinated with other work.
Hangers at ends of runner channels shall be located not more than 150 mm 6 inches from wall. Hanger wire shall be looped around bottom chord of open-web steel joist or secured to structural elements with suitable fasteners. Sags or twists in the suspended system shall be adjusted. Damaged or faulty parts shall be replaced.

3.2.2 Main Runners

Main runner channels shall be installed in accordance with ASTM C 841. Hanger wire shall be saddle-tied to runner channels, and the end of hanger wires shall be twisted three times around itself. Main runners shall not come in contact with abutting masonry or concrete walls and partitions. Main runners shall be located within 150 mm 6 inches of the paralleling wall to support the ends of cross furring.

3.2.3 Furring Channels

Furring channels shall be spaced in accordance with ASTM C 841 for the type of lath used. Furring channels shall be securely saddle-tied to the runner channels and to structural supports at each crossing with tie wire, hairpin clips, or equivalent clips or fastenings. Furring channels shall be located within 50 mm 2 inches of parallel walls and beams, and 15 mm 1/2 inch from abutting walls. When gypsum lath is used on ceilings, hat-shaped sheetmetal

furring channels may be used in lieu of 19 mm 3/4 inch rolled steel furring channels. Gypsum lath shall be screw-applied at 200 mm 8 inches on centers along supports and not less than 10 mm 3/8 inch from edges of lath.

3.2.4 Light Fixtures and Air Diffusers

Light fixtures and air diffusers shall be supported directly from suspended ceiling runners. Wires shall be provided at appropriate locations to carry the weight of recessed or surface mounted light fixtures and air diffusers.

3.3 FURRED CEILING FRAMING INSTALLATION

Ceiling runners at continuous furred ceilings shall be applied directly to furring channels and secured thereto with tie wire, bolts, or screws at not more than 600 mm 24 inch centers.

3.4 WALL FRAMING INSTALLATION

3.4.1 Loadbearing Wall Framing

Load-bearing steel studs shall be spaced for the type of lath used at external corners, partition ends, and approximately 50 mm 2 inches each side of internal corners. Floor and ceiling runners shall be firmly secured to structural members with screws or bolts in expansion shields, hard-tempered stub nails, powder-actuated anchors, or by other approved methods at not more than 600 mm 24 inch centers. Studs shall be attached to runner tracks with rivets or screws. Runner to tracks shall be aligned to partition layout at floor and ceiling, and shall be secured to concrete slabs with minimum 22 mm 7/8 inch powder-driven pins or 19 mm 3/4 inch concrete stub nails at no more than 1200 mm 48 inches on centers. Each stud shall be aligned, plumb and true to top and bottom runner tracks.

3.4.2 Non-Loadbearing Wall Framing

Nonload-bearing steel studs shall be installed in accordance with ASTM C 754 with spacings as indicated in ASTM C 841 for the type of lath used. Studs shall be aligned and secure in top and bottom runners at spacings indicated on drawings. [One] [Two] beads of acoustic sealant shall be placed between runners and substrate to achieve the required air seal. Stud splicing is not acceptable. Corners shall be constructed with a minimum of three studs. Stud framing system shall be braced and made rigid.

3.4.3 Adjoining Walls and Columns

Studs which adjoin walls or columns shall be secured near the top and bottom, and at least one intermediate point, but not more than 1.5 m5 feet on centers, with wire inserts, dovetail anchors, toggle bolts, or bolts set in expansion shields.

3.4.4 Wall Bracing

Partitions more than 3 m 10 feet long or 2.7 m 9 feet high shall be braced with 19 mm 3/4 inch steel channel stiffeners concealed horizontally. Stiffeners shall be spaced vertically not more than 2 m 6 feet and shall be

secured to each stud. Unsupported partitions 6 m 20 feet or more in height shall be braced with 40 mm 1-1/2 inch channel type horizontal stiffeners.

3.4.5 Corners and Intersection

Corners and intersections of partitions shall be formed of three studs. Studs at internal corners shall be placed not more than 50 mm 2 inches from partition intersection.

3.4.6 Wall Openings

One loadbearing metal stud shall be installed at each jamb of door openings continuous from floor to ceiling, and shall be welded to jamb anchors and runner tracks. Jack studs shall be attached to runner track on interior of head of frame, and to runner track or 19 mm 3/4 inch channel at ceiling. A 19 mm 3/4 inch channel reinforcement shall be placed inside the partition 150 to 200 mm 6 to 8 inches above door openings continuously through two stud spaces on each side of jambs, and welded to the flange. Studs shall be doubled at wall openings, with not more than 50 mm 2 inches each side of openings. Stud placement shall be coordinated with supports and attachments. Intermediate studs above and below openings shall be secured at same spacing as wall studs. Stud framing shall extend to ceiling or through ceiling as indicated on drawings. Clearance shall be maintained between partition and structure to avoid deflection transfer to studs of partitions which extend through ceiling to structure. Placement of insulation in stud spaces shall be made inaccessible after studs are installed.

3.4.7 Bucks, Anchors and Blocking

Installation of bucks, anchors, and blocking shall be coordinated with electrical and mechanical work to be placed in or behind stud framing, and shall be coordinated with blocking requirements for support of plumbing fixtures, toilet partitions, wall cabinets, toilet accessories, hardware and similar items scheduled for installation.

3.5 WALL FURRING INSTALLATION

Metal furring shall be installed in accordance with ASTM C 754 and ASTM C 841.

3.6 SINGLE/DOUBLE CHANNEL, AND STUDLESS SOLID PARTITION INSTALLATION

Channel studs for single channel and double channel stud partitions shall be spaced 400 mm 16 inches on centers and shall be secured to ceiling runners and to floor runners or base clips with wire ties or sheet-metal screws. Studs on each side of door openings shall be doubled and stiffened with a 6 x 25 mm 1/4 x l inch flat steel strut, shop-coated with rust-inhibiting paint. Ends of struts shall be bent and punched for bolting to floor and ceiling construction. Where rib metal lath is the plaster base in continuous lengths from ceiling runners to floor runners for partitions less than 3 m 10 feet in height, steel channel studs may be excluded from the partition except at locations previously specified for door openings. Rib

lath shall be firmly attached to ceiling runner tracks or cornerite and to floor runner track or base by wire ties located not more than 200 mm 8 inches on centers. Studless rib lath partitions shall be limited to not less than 50 mm2 inches thick. Partitions shall be as shown.

3.7 LATHING INSTALLATION

3.7.1 Metal Lath on Vertical Surfaces

Metal lath shall be applied with the long dimension across the supports, with true even surfaces, and without sags or buckles in accordance with ASTM C 841. Metal lath on vertical surfaces shall be oriented to provide maximum mechanical bond with plaster and the upper sheet shall be attached to overlap the lower sheet. When paper-backed lath is used, the upper sheet shall be attached to overlap the lower sheet. The lath shall be secured to supports at intervals not exceeding 150 mm. 6 inches. Nails or staples shall be used for securing lath to wood supports. Tie wires, rings, clips, or other approved fasteners having equivalent holding power of the tie wires shall be used for securing the plaster base to metal supports and to concrete or masonry. Side-laps or junction of sides of plaster base shall be tied or otherwise secured at intervals not exceeding 225 mm 9 inches between supports, in addition to being secured to supports.

3.7.2 Metal Lath on Ceilings

Metal lath on ceilings shall be in accordance with ASTM C 841. [Lath on unrestrained ceilings shall not be turned down at junction with wall or tied to wall lath or furring.] [Lath on restrained ceilings shall be turned down at junction with wall, or shall be applied to cornerite or corner bead.]

3.7.3 Side and End Laps

Side and end laps of metal plaster bases shall be performed in accordance with ASTM C 841 for flat lath and ribbed lath.

3.7.4 Chases and Recesses

Chases and recesses shall be lathed for plastering. Openings over 300 mm 12 inches wide shall be bridged with furring channels spaced 300 mm 12 inches on centers. Openings 300 mm 12 inches wide and less do not need to be bridged. Lath shall extend 75 mm 3 inches beyond the edges of opening. Lath shall be securely fastened by nailing or tying. Lath shall be securely fastened with nails, screws or wire ties.

3.7.5 Installation of Gypsum Lath

Gypsum lath shall be installed in accordance with ASTM C 841. Spring clips or floating-wall-type attachment may be used in lieu of nails. Lath shall be cut and fitted to allow slight clearance around openings. Horizontal or vertical joints are not acceptable at corners of openings. End joints shall be made over supports. Where clip systems are approved, end joints shall be staggered in alternate courses. End joints shall not coincide with ceiling joints, and shall not occur in the same course on opposite side of support.

Internal corners shall be reinforced with cornerites, and external corners shall be reinforced with corner beads. Internal corners of unrestrained ceilings shall not be reinforced with cornerites.

3.8 INSTALLATION OF GYPSUM BASE TO RECEIVE VENEER PLASTER

Gypsum base shall be installed in accordance with ASTM C 844. Base shall be cut and fitted to allow slight clearance around openings. Horizontal or vertical joints are not acceptable at corners of openings. End joints shall be made over supports. Where clip systems are approved, end joints shall be staggered in alternate courses. End joints shall not coincide with ceiling joints, and shall not occur in the same course on opposite side of support. Internal corners shall be reinforced with cornerites, and external corners shall be reinforced with corner beads. Internal corners of unrestrained ceilings shall not be reinforced with cornerites.

3.9 OPENINGS

Reinforcement shall be provided at corners of openings in plastered areas extending 300 mm 12 inches or more in any dimension by securing striplath diagonally at corners. Striplath shall be at least 150 mm6 inches wide by 400 mm 16 inches long. Shorter lengths shall be used to preclude lapping striplath. Striplath shall be secured to lathing without extending fastenings into or around supporting members. Where plaster is applied directly to concrete or masonry surfaces, striplath shall be secured to the concrete or masonry.

3.9.1 Steel Frames

Steel frames shall be securely attached through built-in anchors to the nearest stud on each side of opening with tie wire, bolts, screws, or welding or bracing where bracing is specified. Steel frames shall be grouted solid with plaster grout and a groove shall be formed within the frame returns to receive lath and plaster.

3.9.2 Wood Frames

Wood frames shall be securely attached to the nearest stud in frame partitions and to wood bucks built into the solid partition. Sizes shall be as indicated for each type and size of wall or partition.

3.9.3 Ceiling Openings

Framing shall be provided for ceiling openings and supplemental supporting members for items mounted in ceiling or attached to ceiling suspension system. Frames for openings shall be secured to lath support members. Frames provided with expanded metal flanges shall be secured to lath. Intermediate structural members shall be provided for attachment or suspension of support members.

3.9.4 Openings in Hollow Partitions

Hollow partition door openings shall be additionally braced by tying together each set of double-jamb studs with not less than four solid metal column clips evenly spaced along each jamb.

3.9.5 Openings in Partitions Not To Structure

Partitions not extending to the structural ceiling or structural supports or frame shall be strengthened at openings with angle bracing from each jamb location anchored to the structural ceiling or supports.

3.9.6 Cross Bracing

Cross bracing between partitions or similar bracing may be substituted for angle bracing as approved. Minor frames such as those required for access panels may be provided with expanded metal flanges which shall be attached to lath.

3.10 INSTALLATION OF TRIM, MOLDINGS, AND ACCESSORIES

Trim, moldings, and accessories shall be installed in standard lengths level and plumb to straight lines and as indicated on drawings. Fastenings shall be spaced not over 300 mm 12 inches on centers for single-flanged accessories and not over 600 mm 24 inches on centers on each flange of double-flanged accessories. Items shall be mitered or coped at corners, or prefabricated corners shall be used. Joints in straight runs shall be formed with splice or tie plates.

3.10.1 Base Screeds

Base screeds shall be installed approximately 75 mm 3 inches above finished floor elevation unless indicated otherwise.

3.10.2 Corner Beads

Corner beads shall be installed in standard lengths at external plastered corners, and shall be secured to furring members or supports.

3.10.3 Cornerites

Cornerites shall be installed at internal angles formed by abutting surfaces of gypsum lath or metal lath not turned down at horizontal corners or returned around vertical corners. Cornerites shall be secured to lathed surfaces. Cornerites shall be secured to concrete or masonry where plaster is applied directly to concrete or masonry surfaces. Cornerites shall not be installed at unrestrained ceilings.

3.10.4 Casing Beads

Casing beads shall be installed at the joints of dissimilar base materials in the same plane and at exposed edges of plaster including junctions of walls and ceilings except that beads shall not be installed at restrained ceilings abutting plastered surfaces. At the perimeter of unrestrained suspended ceilings, the casing bead shall be secured to the ceiling to provide a 10 mm 3/8 inch opening between the abutting surfaces. The opening

shall be sealed prior to plastering with sealant as specified in Section 07900 JOINT SEALING.

3.10.5 Expansion and Control Joint Beads

Expansion joint beads shall be installed as control joints in plasterwork at the locations indicated. Plaster base shall not be run continuous through control joints. Additional supports shall be installed as required to support the beads.

3.10.6 Trim

Trim shall be installed where indicated and as required to complete the plaster work.

3.11 PLASTER THICKNESS AND SURFACE EVENNESS

Plaster thickness and surface evenness shall be controlled by grounds or screeds of metal, wood, or plaster. Wood grounds are specified under Section 06100 ROUGH CARPENTRY. Plaster thickness shall be as shown.

3.11.1 Grounds and Screeds

Grounds shall be used for securing trim items, and for finished corners and terminations. Screeds shall be installed for base screeds when wood or metal grounds are not required. Temporary screeds shall be installed when permanent screeds or grounds cannot be used. On completion of approved base coats, temporary screeds shall be removed and voids immediately filled with plaster.

3.11.2 Plaster Screeds

Plaster screeds shall be used within the plastered areas to supplement wood and metal grounds and screeds.

3.12 PLASTER GROUT

Plaster grout shall be scratch-coat material mixed to a non-fluid consistency. Plaster grout shall be used to fill steel door frames and partition bases. Grout shall be placed and grooved prior to gypsum lathing operations. Heads and jambs of frames shall be filled solid with grout, and 13 mm 1/2 inch deep grooves shall be formed in the grout, while plastic, to receive gypsum lath.

3.13 PROPORTIONS AND MIXING

3.13.1 Portland Cement Plaster Base Coat

Base coat shall be proportioned and mixed in accordance with ASTM C 926 coat [L] [C].

3.13.2 Lime-Putty Finish

Lime-putty finish shall be mixed in the proportion of 1 part of gypsum gauging plaster, calcined gypsum, to 3 parts of lime putty by volume. The

mix shall be approximately equivalent to one 45 kg 100 pound bag of gypsum plaster to four 23 kg 50 pound bags of hydrated lime or 0.13 cubic meters 4.5 cubic feet of lime putty or 0.13 cubic meters 35 gallons of lime putty. Perlite or vermiculite aggregated base coats shall have 23 kg 50 pounds of fine white sand or 0.014 cubic meters 1/2 cubic foot of perlite fines added for each 45 kg100 pounds of gauging plaster.

3.13.3 Prepared-Gypsum Finish

Prepared-gypsum finish shall be mixed with water to the proper consistency in accordance with manufacturer's published instructions. Prepared-gypsum finish shall have a minimum compressive strength of not less than 2 MPa300 psi when tested in accordance with ASTM C 472. Prepared gypsum finish shall be used only over sanded base coats.

3.13.4 Keene's Cement Finish

Keene's cement finish shall be mixed in the proportions of 45 kg 100 pounds of Keene's cement to 11 kg, 25 pounds, dry weight, of hydrated lime. The mix shall be approximately equivalent to one 45 kg100 pound bag of Keene's cement to one-half 23 kg 50 pound bag of hydrated lime or 23 kg 50 pounds lime putty or 0.017 cubic meters 4-1/2 gallons lime putty. Subject to approval, 5 kg 10 pounds of fine white sand may be added to the above mix. When mixing mechanically, the water shall be put into the mixer first, then the lime, the white sand if used, and finally the Keene's cement.

3.13.5 High-Strength Gypsum Finish

High-strength gypsum finish shall be mixed by dry weights in proportions of 100 pounds of high-strength gypsum gauging plaster to 45 kg 100 pounds of hydrated lime or 90 kg 200 pounds of lime putty. Gypsum gauging plaster for high-strength finish coat shall be mixed with lime putty in accordance with ASTM C 28. Gauging plaster shall have a compressive strength not less than 21 MPa 3000 psi when tested in accordance with ASTM C 472. Factory-mixed gypsum finishing plasters shall equal or exceed the performance requirements of job-mixed finishing plasters.

3.13.6 Portland Cement-Plaster Finish

The finish coat shall be proportioned and mixed in accordance with ASTM C 926, coat [FL] [F].

3.14 MACHINE APPLICATION

A plastering machine may be used for the application of scratch and brown coats. Plaster for machine application shall be a special plaster compounded and packaged by the manufacturer for this purpose. Slump cone equipment shall be present on the jobsite when base-coat plastering begins, and until completion. Testing of the mix shall be the responsibility of the Contractor, but equipment shall be available for use by the Government. Additional water shall not be added to the mix to allow pumping through extended hose lines to the plastering nozzle. The amount of water added to each batch of plaster shall be that quantity which results in a plaster

slump of not more than 75 mm 3 inches for gypsum and 65 mm2-1/2 inches for portland cement using a standard plaster slump cone or 150 mm 6 inches for gypsum and 125 mm 5 inches for portland cement using a concrete slump cone. Application of plaster shall conform to the provisions of ASTM C 842.

3.15 QUALITY CONTROL

Fluidity or stiffness of plaster shall be tested with a standard 50 x 100 x 150 mm 2 x 4 x 6 inch plaster slump testing cone or by a 100 x 200 x 300 mm 4 x 8 x 12 inch concrete slump testing cone. Method of making slump test shall be as follows:

a. Place cone on center of dry base plate located on a level, firm surface. Hold cone tightly against plate.

b. Fill the cone with plaster obtained from the hose or nozzle, without air on the nozzle, puddling with tamping rod during the operation to eliminate air bubbles or voids.

c. Screed plaster level with top of cone.

d. Lift cone straight up from base plate in a slow and uniform motion, and place it on the base plate next to plaster sample.

e. Lay a straightedge across top of cone, being careful not to disturb or jostle the plate, and measure the slump in millimeters inches from the bottom of the straightedge to the top of the plaster sample.

3.16 APPLICATION OF FINISHES

The finish coat may be omitted back of projecting bases, wainscots, structural-glass wall finish, cabinets, chalkboards, tackboards, bulletin boards, acoustic treatments, fixed equipment, and other locations where indicated. Finish coats shall not be applied above wainscots until wainscots have been installed. Plaster shall have a [[smooth-trowel] [texture] finish] [finish as shown].

3.16.1 Interior Gypsum Plaster

Application of interior gypsum plaster (full thick) shall be in accordance with ASTM C 842. Nominal plaster thickness shall be [as shown] [[_____] mm inches].

3.16.2 Gypsum Veneer Plaster

Application of gypsum veneer plaster shall be in accordance with ASTM C 843. Plaster shall be [[one-component system] [two-component system]] [system as shown].

3.16.3 Lime-Putty Finish

Lime-putty finish shall be applied over gypsum plaster base coats in accordance with ASTM C 842. The finish coat shall be 1.5 to 3 mm1/16 to 1/8 inch thick and troweled smooth and free from blemishes.

3.16.4 Prepared-Gypsum Finish

Prepared-gypsum finish may be used in lieu of lime-putty finish, and shall be applied in accordance with the manufacturer's printed directions.

3.16.5 Keene's Cement Finish and High Strength Gypsum-Plaster Finish

Keene's cement finish and high-strength gypsum-plaster finish shall be

applied in accordance with ASTM C 842. Where indicated on the finish schedule, either may be used at the Contractor's option. Neither finish shall be used over lightweight-aggregate-plaster or portland-cement-plaster base coats. The finish coat shall be 1.5 to 3 mm 1/16 to 1/8 inch thick, and troweled smooth and free from blemishes and irregularities.

3.16.6 Portland Cement-Based Plaster

[Two-coat] [Three-coat] portland cement-based plaster shall be applied in accordance with ASTM C 926. The final coat shall be finished to a true and even surface free from rough areas, checks, or blemishes. Nominal plaster finish thickness shall be [as shown] [[_____] mm inches].

3.17 PATCHING

Plaster showing oversanding, cracks, blisters, pits, checks, discoloration or other defects is not acceptable. Defective plaster work shall be removed and replaced with new plaster at the expense of Contractor. Patching of defective work will be permitted only when approved by the Contracting Officer. Patching shall match existing work in texture and color.

3.18 SAMPLES OF COMPLETED WORK

Samples of completed work may be taken by the Contracting Officer at any time for laboratory inspection and tests to determine conformance.

-- End of Section --

SECTION TABLE OF CONTENTS

DIVISION 09 - FINISHES

SECTION 09900

PAINTING, GENERAL

PART 1 GENERAL

1.1 REFERENCES
1.2 SUBMITTALS
1.3 PACKAGING, LABELING, AND STORING
1.4 APPROVAL OF MATERIALS
1.5 ENVIRONMENTAL CONDITIONS
1.6 SAFETY AND HEALTH
1.6.1 Worker Exposures
1.6.2 Toxic Compounds
1.6.3 Training
1.6.4 Coordination

PART 2 PRODUCTS

2.1 PAINT
2.1.1 Colors and Tints
2.1.2 Mildewcide and Insecticide
2.1.3 Lead
2.1.4 Chromium
2.1.5Volatile Organic Compound (VOC) Content

PART 3 EXECUTION

3.1 PROTECTION OF AREAS NOT TO BE PAINTED
3.2 SURFACE PREPARATION
3.2.1 Concrete, Stucco and Masonry Surfaces
3.2.2 Ferrous Surfaces
3.2.3 Nonferrous Metallic Surfaces
3.2.4 Gypsum Board Surfaces
3.2.5 Mastic-Type Surfaces
3.2.6 Plaster Surfaces
3.2.7 Wood Surfaces
3.2.7.1 Interior Wood Stain
3.2.7.2 Sanding of Wood Floors
3.2.8 Previously Painted Surfaces
3.3 MIXING AND THINNING
3.3.1 Cement-Emulsion Filler Coat
3.3.2 Two-Component Systems
3.4 APPLICATION
3.4.1 Ventilation
3.4.2 Respirators

3.4.3 First Coat
3.4.4 Timing
3.4.5 Stains
3.4.6 Fillers
3.4.6.1 Cement-Emulsion Filler
3.4.6.2 Latex Filler
3.4.7 Textured Coating
3.4.8 Ferrous-Metal Primer
3.5 PIPE COLOR CODE MARKING
3.6 MISCELLANEOUS PAINTING
3.6.1 Lettering
3.6.2 Obstructions To Aviation
3.7 SURFACES TO BE PAINTED
3.8 SURFACES NOT TO BE PAINTED
3.9 CLEANING
3.10 PAINTING SCHEDULES

-- End of Section Table of Contents --

SECTION 09900

PAINTING, GENERAL

PART 1 GENERAL

1.1 REFERENCES

The publications listed below form a part of this specification to the extent referenced. The publications are referred to in the text by basic designation only.

AMERICAN CONFERENCE OF GOVERNMENTAL INDUSTRIAL HYGIENISTS (ACGIH)

AMERICAN SOCIETY FOR TESTING AND MATERIALS (ASTM)

COMMERCIAL ITEM DESCRIPTIONS (CID)

FEDERAL AVIATION ADMINISTRATION (FAA)

FEDERAL SPECIFICATIONS (FS)

MAPLE FLOORING MANUFACTURERS ASSOCIATION (MFMA)

THE SOCIETY FOR PROTECTIVE COATINGS (SSPC)

1.2 SUBMITTALS

Government approval is required for submittals with a "G" designation; submittals not having a "G" designation are for information only. When used, a designation following the "G" designation identifies the office that will review the submittal for the Government. The following shall be submitted in accordance with Section 01330 SUBMITTAL PROCEDURES:

SD-03 Product Data Paint;

[_____], [_____]

The names, quantity represented, and intended use for the proprietary brands of materials proposed to be substituted for the specified materials [when the required quantity of a particular batch is 200 L 50 gallons or less.] [regardless of quantities in states where VOC content limitations apply.]

Mixing and Thinning; [_____], [_____]
Application; [_____], [_____]

Manufacturer's current printed product description, material safety data sheets (MSDS) and technical data sheets for each coating system. Detailed mixing, thinning and application instructions, minimum and maximum application temperature, and curing and drying times between coats for epoxy, moisture-curing polyurethane, and liquid glaze coatings. Detailed application instructions for textured coatings shall be provided.

SD-04 Samples

Moisture-Curing Polyurethane; [_____], [_____]
A complete moisture-curing polyurethane system applied to a panel of the same material as that on which the coating will be applied in the work and for each color specified. The sample panels will be used for quality control in applying the system.

Paint; [_____], [_____]

While the material is at the site or source of supply, and at a time agreeable to the Contractor and the Contracting Officer, a 1 liter 1 quart sample of each color and batch, except for quantities of 200 liters 50 gallons or less, shall be taken by random selection from

the sealed containers by the Contractor in the presence of a representative of the Contracting Officer. The contents of the containers to be sampled shall be thoroughly mixed to ensure that the sample is representative. Samples shall be identified by designated name, specification number, manufacturer name and address, batch number, project contract number, intended use, and quantity involved.
SD-06 Test Reports Paint; [_____], [_____]

A statement as to the quantity represented and the intended use, plus the following test report for batches in excess of 200 L: 50 gallons:

a. A test report showing that the proposed batch to be used meets specified requirements:

b. A test report showing that a previous batch of the same formulation as the batch to be used met specified requirements, plus, on the proposed batch to be used, a report of test results for properties of weight per liter, gallon, viscosity, fineness of grind, drying time, color, and gloss.

SD-07 Certificates

Lead; [_____], [_____]
Mildewcide and Insecticide; [_____], [_____]
Volatile Organic Compound (VOC) Content; [_____], [_____]

Certificate stating that paints for interior use contain no mercurial mildewcide or insecticide. Certificate stating that paints proposed for use contain not more than 0.06 percent lead by weight of the total nonvolatile. Certificate stating that paints proposed for use meet Federal VOC regulations and those of the of the local Air Pollution Control Districts having jurisdiction over the geographical area in which the project is located.

1.3 PACKAGING, LABELING, AND STORING

Paints shall be in sealed containers that legibly show the designated name, formula or specification number, batch number, color, quantity, date of manufacture, manufacturer's formulation number, manufacturer's directions including any warnings and special precautions, and name of manufacturer. Pigmented paints shall be furnished in containers not larger than 20 liters. 5 gallons. Paints and thinner shall be stored in accordance with the manufacturer's written directions and as a minimum stored off the ground, under cover, with sufficient ventilation to prevent the buildup of flammable vapors and at temperatures between 4 and 35 degrees C. 40 and 95 degrees F. Paints shall be stored on the project site or segregated at the source of supply sufficiently in advance of need to allow 30 days for testing.

1.4 APPROVAL OF MATERIALS

When samples are tested, approval of materials will be based on tests of the samples; otherwise, materials will be approved based on test reports

furnished with them. If materials are approved based on test reports furnished, samples will be retained by the Government for testing should the materials appear defective during or after application. In addition to any other remedies under the contract the cost of retesting defective materials will be at the Contractor's expense.

1.5 ENVIRONMENTAL CONDITIONS

Unless otherwise recommended by the paint manufacturer, the ambient temperature shall be between 7 and 35 degrees C 45 and 95 degrees F when applying coatings other than water-thinned, epoxy, and moisture-curing polyurethane coatings. Water-thinned coatings shall be applied only when ambient temperature is between 10 and 32 degrees C. 50 and 90 degrees F. Epoxy, and moisture-curing polyurethane coatings shall be applied only within the minimum and maximum temperatures recommended by the coating manufacturer. Moisture-curing polyurethane shall not be applied when the relative humidity is below 30 percent.

1.6 SAFETY AND HEALTH

Work shall comply with applicable Federal, State, and local laws and regulations, and with the ACCIDENT PREVENTION PLAN, including the Activity Hazard Analysis as specified in the CONTRACT CLAUSES. The Activity Hazard Analysis shall include analyses of the potential impact of painting operations on painting personnel and on others involved in and adjacent to the work zone.

1.6.1 Worker Exposures

Exposure of workers to hazardous chemical substances shall not exceed limits established by ACGIH Limit Values, or as required by a more stringent applicable regulation.

1.6.2 Toxic Compounds

Toxic products having ineffective physiological warning properties, such as no or low odor or irritation levels, shall not be used unless approved by the Contracting Officer.

1.6.3 Training

Workers having access to an affected work area shall be informed of the contents of the applicable material data safety sheets (MDSS) and shall be informed of potential health and safety hazard and protective controls associated with materials used on the project. An affected work area is one which may receive mists and odors from the painting operations. Workers involved in preparation, painting and clean-up shall be trained in the safe handling and application, and the exposure limit, for each material which the worker will use in the project. Personnel having a need to use respirators and masks shall be instructed in the use and maintenance of such equipment.

1.6.4 Coordination

Work shall be coordinated to minimize exposure of building occupants, other

Contractor personnel, and visitors to mists and odors from preparation, painting and clean-up operations.

PART 2 PRODUCTS

2.1 PAINT

The term "paint" as used herein includes emulsions, enamels, paints, stains, varnishes, sealers, cement-emulsion filler, and other coatings, whether used as prime, intermediate, or finish coat. Paint shall conform to the requirements listed in the painting schedules at the end of this section, except when the required amount of a material of a particular batch is 200 liters 50 gallons or less, an approved first-line proprietary paint material with similar intended formulation, usage and color to that specified may be used. Additional requirements are as follows:

2.1.1 Colors and Tints

Colors shall be as selected from manufacturer's standard colors, as indicated. Manufacturer's standard color is for identification of color only. Tinting of epoxy and urethane paints shall be done by the manufacturer. Stains shall conform in shade to manufacturer's standard color. The color of the undercoats shall vary slightly from the color of the next coat.

2.1.2 Mildewcide and Insecticide

Paint specified for all coats applied to fabrics and vapor barrier jackets over insulation and surfaces in [_____] area shall contain a mildewcide that will not adversely affect the color, texture, or durability of the coating. The mildewcide shall be incorporated into the paint by the manufacturer and shall attain a surface disfigurement rating of 8 or greater when tested in accordance with ASTM D 3273 and evaluated in accordance with ASTM D 3274. Mercurial mildewcide shall not be used in interior paint. Insecticides shall not be used in paint.

2.1.3 Lead

Paints containing lead in excess of 0.06 percent by weight of the total nonvolatile content (calculated as lead metal) shall not be used.

2.1.4 Chromium

Paints containing zinc chromate or strontium chromate pigments shall not be used.

2.1.5 Volatile Organic Compound (VOC) Content

Paints shall comply with applicable federal, state and local laws enacted to insure compliance with Federal Clean Air Standards and shall conform to the restrictions of the local air pollution control authority.

PART 3 EXECUTION

3.1 PROTECTION OF AREAS NOT TO BE PAINTED

Items not to be painted which are in contact with or adjacent to painted surfaces shall be removed or protected prior to surface preparation and painting operations. Items removed prior to painting shall be replaced when painting is completed. Following completion of painting, workmen skilled in the trades involved shall reinstall removed items. Surfaces contaminated by coating materials shall be restored to original condition.

3.2 SURFACE PREPARATION

Surfaces to be painted shall be clean and free of foreign matter before application of paint or surface treatments. Oil and grease shall be removed prior to mechanical cleaning. Cleaning shall be programmed so that dust and other contaminants will not fall on wet, newly painted surfaces. Exposed ferrous metals such as nail heads on or in contact with surfaces to be painted with water-thinned paints, shall be spot-primmed with a suitable corrosion-inhibitive primer capable of preventing flash rusting and compatible with the coating specified for the adjacent areas.

3.2.1 Concrete, Stucco and Masonry Surfaces

Concrete, stucco and masonry surfaces shall be allowed to dry at least 30 days before painting, except concrete slab on grade which shall be allowed to cure 90 days before painting. Surfaces shall be cleaned in accordance with ASTM D 4258. Glaze, efflorescence, laitance, dirt, grease, oil, asphalt, surface deposits of free iron and other foreign matter shall be removed prior to painting. Surfaces to receive polyurethane or epoxy coatings shall be acid-etched or mechanically abraded as specified by the coating manufacturer, rinsed with water, allowed to dry, and treated with the manufacturer's recommended conditioner prior to application of the first coat.

3.2.2 Ferrous Surfaces

Ferrous surfaces including those that have been shop-coated, shall be solvent-cleaned or detergent-washed in accordance with SSPC SP 1. Surfaces that contain loose rust, loose mill scale, and other foreign substances shall be cleaned mechanically with hand tools according to SSPC SP 2, power tools according to SSPC SP 3 or by sandblasting according to SSPC SP 7/NACE 4. Shop-coated ferrous surfaces shall be protected from corrosion by treating and touching up corroded areas immediately upon detection.

3.2.3 Nonferrous Metallic Surfaces

Galvanized, aluminum and aluminum-alloy, lead, copper, and other nonferrous metal surfaces shall be solvent-cleaned or detergent-washed in accordance with SSPC SP 1.

3.2.4 Gypsum Board Surfaces

Gypsum board surfaces shall be dry and shall have all loose dirt and dust removed by brushing with a soft brush, rubbing with a cloth, or vacuum-

cleaning prior to application of the first-coat material. A damp cloth or sponge may be used if paint will be water-based.

3.2.5 Mastic-Type Surfaces

Mastic-type surfaces shall be prepared by removing foreign material.

3.2.6 Plaster Surfaces

Plaster shall age at least 30 days before painting. Plaster shall be clean and free from loose matter and shall have an instrument-measured moisture content not exceeding 8 percent.

3.2.7 Wood Surfaces

Wood surfaces shall be cleaned of foreign matter. Moisture content of the wood shall not exceed 12 percent as measured by a moisture meter, unless otherwise authorized. Wood surfaces adjacent to surfaces to receive water-thinned paints shall be primed and/or touched up before applying water-thinned paints. Small, dry seasoned knots shall be scraped, cleaned, and given a thin coat of commercial knot sealer, before application of the priming coat. Pitch on large, open, unseasoned knots and all other beads or streaks of pitch shall be scraped off, or, if it is still soft, removed with mineral spirits or turpentine, and the resinous area shall be thinly coated with knot sealer. Finishing nails shall be set, and all holes and surface imperfections shall be primed. After priming, holes and imperfections in finish surfaces shall be filled with putty or plastic wood filler, colored to match the finish coat if natural finish is required, allowed to dry, and sanded smooth. Putty or wood filler shall be compatible with subsequent coatings.

3.2.7.1 Interior Wood Stain

Interior wood surfaces to receive stain shall be sanded. Oak and other open-grain wood to receive stain shall be given a coat of wood filler not less than 8 hours before the application of stain; excess filler shall be removed and the surface sanded smooth.

3.2.7.2 Sanding of Wood Floors

Sanding of wood floors is specified in Section 09640 WOOD STRIP FLOORING. Floors of oak or similar open-grain wood shall be filled with wood filler recommended by the finish manufacturer and the excess filler removed.

3.2.8 Previously Painted Surfaces

Previously painted surfaces [specified to be repainted] [damaged during construction] shall be thoroughly cleaned of all grease, dirt, dust or other foreign matter. Blistering, cracking, flaking and peeling or other deteriorated coatings shall be removed. Slick surfaces shall be roughened. Damaged areas such as, but not limited to, nail holes, cracks, chips, and spalls shall be repaired with suitable material to match adjacent undamaged areas. Edges of chipped paint shall be feather edged and sanded smooth. Rusty metal surfaces shall be cleaned as per SSPC requirements. Solvent, mechanical, or chemical cleaning methods shall be used to provide surfaces

suitable for painting. Chalk shall be removed so that when tested in accordance with ASTM D 4214, the chalk resistance rating is no less than 8. New, proposed coatings shall be compatible with existing coatings. If existing surfaces are glossy, the gloss shall be reduced.

3.3 MIXING AND THINNING

When thinning is approved as necessary to suit surface, temperature, weather conditions, or application methods, paints may be thinned in accordance with the manufacturer's directions. When thinning is allowed, paints shall be thinned immediately prior to application with not more than 0.125 L 1 pint of suitable thinner per liter. gallon. The use of thinner shall not relieve the Contractor from obtaining complete hiding, full film thickness, or required gloss. Thinning shall not cause the paint to exceed limits on volatile organic compounds. Paints of different manufacturers shall not be mixed.

3.3.1 Cement-Emulsion Filler Coat

Cement and aggregate shall be dry-mixed so that uniform distribution and intermixing are obtained. Mixing liquid and one-half of the total amount of water shall be premixed and added gradually to the white portland cement and aggregate with constant stirring until a thick, smooth material is obtained. Emulsion paint shall then be added to the mixture and stirred until uniformity is obtained. The blend shall have a thick, creamy consistency. The remainder of the water shall be added if necessary to obtain a material with adequate application properties. Blending resin emulsion or emulsion paint with any other component shall be done with caution; too rapid an agitation will cause air entrapment and foaming.

3.3.2 Two-Component Systems

Two-component systems shall be mixed in accordance with manufacturer's instructions. Any thinning of the first coat to ensure proper penetration and sealing shall be as recommended by the manufacturer for each type of substrate.

3.4 APPLICATION

Painting practices shall comply with applicable federal, state and local laws enacted to insure compliance with Federal Clean Air Standards. Unless otherwise specified or recommended by the paint manufacturer, paint may be applied by brush, roller, or spray. At the time of application, paint shall show no signs of deterioration. Uniform suspension of pigments shall be maintained during application. Each coat of paint shall be applied so dry film shall be of uniform thickness and free from runs, drops, ridges, waves, pinholes or other voids, laps, brush marks, and variations in color, texture, and finish. Hiding shall be complete. Rollers for applying paints and enamels shall be of a type designed for the coating to be applied and the surface to be coated. Special attention shall be given to insure that all edges, corners, crevices, welds, and rivets receive a film thickness equal to that of adjacent painted surfaces. Paints, except water-thinned types, shall be applied only to surfaces that are completely free of moisture as determined by sight or touch.

3.4.1 Ventilation

Affected areas shall be ventilated during paint application so that workers exposure to chemical substances shall not exceed limits as established by ACGIH Limit Values, or as required by a more stringent applicable regulation. Interior work zones having a volume of 280 cubic meters 10,000 cubic feet or less shall be ventilated at a minimum of 2 air exchanges per hour. Ventilation in larger work zones shall be maintained by means of mechanical exhaust. Solvent vapors shall be exhausted outdoors, away from air intakes and workers. Return air inlets in the work zone shall be temporarily sealed before start of work until the coatings have dried.

3.4.2 Respirators

Operators and personnel in the vicinity of operating paint sprayers shall wear respirators.

3.4.3 First Coat

The first coat on plaster, gypsum wallboard, and other surfaces shall include repeated touching up of suction spots or overall application of primer or sealer to produce uniform color and gloss. Excess sealer shall be wiped off after each application. The first coat on both faces of wood doors shall be applied at essentially the same time. Glazed doors and sashes shall be given the specified coating system within 3 weeks of the time they are glazed, but not before the glazing material has set; paint shall overlay glass about 1.78 mm 70 mils all around. Each varnish coat shall be sanded lightly prior to application of subsequent coats.

3.4.4 Timing

Surfaces that have been cleaned, pretreated, and otherwise prepared for painting shall be given a coat of the specified first coat as soon as practical after such pretreatment has been completed, but prior to any deterioration of the prepared surface. Sufficient time shall elapse between successive coats to permit proper drying. This period shall be modified as necessary to suit weather conditions. Oil-based or oleoresinous solvent-type paints shall be considered dry for recoating when the paint feels firm, does not deform or feel sticky under moderate pressure of the thumb, and the application of another coat of paint does not cause the undercoat to lift or lose adhesion. Manufacturer's instructions for application, curing and drying time between coats of two-component systems shall be followed.

3.4.5 Stains

Stain shall be applied at the rate specified in the manufacturer's printed directions. Oil-type stain shall be applied by brushing with the grain for the full length of the board or course of siding.

3.4.6 Fillers

Concrete and masonry surface voids shall be filled; however, surface irregularities need not be completely filled. The dried filler shall be

uniform and free of pinholes. Filler shall not be applied over caulking compound.

3.4.6.1 Cement-Emulsion Filler

Immediately before filler application, surfaces shall be dampened uniformly and thoroughly, with no free surface water visible, by several applications of potable water with a fog spray, allowing time between the sprayings for water to be absorbed. Cement-emulsion filler shall be scrubbed into the surface vigorously with a stiff-bristled brush having tampico or palmyra bristles not longer than 63 mm. 2-1/2 inches. At least 24 hours shall elapse before applying exterior emulsion paint over cement-emulsion filler. When the ambient temperature is over 29 degrees C, 85 degrees F, cement-emulsion filler surfaces shall be dampened lightly with a fog spray of potable water immediately prior to application of the subsequent paint coat.

3.4.6.2 Latex Filler

Latex filler, CID A-A-1500, shall be applied according to the manufacturer's instructions. Surface voids shall be filled and excess filler shall be removed from the surface with a rubber squeegee. The filler shall be allowed to dry the length of time specified by the manufacturer prior to applying successive coats of paint.

3.4.7 Textured Coating

Application of textured coating, FS TT-C-555, shall be as specified in the manufacturer's printed directions.

3.4.8 Ferrous-Metal Primer

Primer for ferrous-metal shall be applied to ferrous surfaces to receive paint other than asphalt varnish prior to deterioration of the prepared surface. The semitransparent film applied to some pipes and tubing at the mill is not to be considered a shop coat, but shall be overcoated with the specified ferrous-metal primer prior to application of finish coats.

3.5 PIPE COLOR CODE MARKING

Pipes in exposed areas and in accessible pipe spaces shall be provided with color band and titles adjacent to all valves, except those provided at plumbing fixtures, at not more than 12 meter 40 foot spacing on straight pipe runs, adjacent to change in direction, and on both sides where pipes pass through walls or floors. Color code marking shall be of the color listed in TABLE I and the size listed in TABLE II. The arrows shall be installed adjacent to each band to indicate the direction of flow in the pipe. The legends shall be printed in upper-case black letters as listed in TABLE I. Letter sizes shall be as listed in TABLE II. Marking shall be painted or applied using colored, pressure-sensitive adhesive markers of standard manufacture. Paint shall be as specified for insulated and uninsulated piping.

TABLE I. COLOR CODES FOR MARKING PIPE

Material	Band	Letters and Arrow*	Legend
Cold water (potable)	Green	White	POTABLE WATER
Fire protection water	Red	White	FIRE PR. WATER
Fire Sprinkler Water	Red	White	FIRE SPR. WATER
Hot water (domestic)	Green	White	H.W.
Hot water recirculating (domestic)	Green	White	H.W.R.
High temp. water supply	Yellow	Black	H.T.W.S.

TABLE I. COLOR CODES FOR MARKING PIPE

Material	Band	Letters and Arrow*	Legend
High temp. water return	Yellow	Black	H.T.W.R.
Boiler feed water	Yellow	Black	B.F.
Low temp. water supply (heating)	Yellow	Black	L.T.W.S.
Low temp. water return (heating)	Yellow	Black	L.T.W.R.
Condenser water supply	Green	White	COND. W.S.
Condenser water return	Green	White	COND. W.R.
Chilled water supply	Green	White	C.H.W.S.
Chilled water return	Green	White	C.H.W.R.
Treated water	Green	White	TR. WATER
Chemical feed	Yellow	Black	CH. FEED
Compressed air	Blue	White	COMP. AIR
Natural gas	Yellow	Black	NAT. GAS
Propane Gas	Yellow	Black	PROP. GAS
Refrigerants	Blue	White	REFRIGERANT
Fuel oil	Yellow	Black	FUEL OIL
Steam	Yellow	Black	STEAM
Condensate	Yellow	Black	CONDENSATE
Hydraulic fluid under 4.1 MPa 600 psi	Green	White	HYDRAULIC FLUID-_____PSI
Hydraulic fluid 4.1 MPa 600 psi and Greater	Yellow	Black	HYDRAULIC FLUID-_____PSI

TABLE II. COLOR CODE MARKING SIZES

Outside Diameter of Pipe Covering (mm)	Width of Color Band (mm)	Arrow Length x Width (mm)	Size of Legend Letters and Numerals (mm)
Less than 38	200	200 x 57	13
38 to 60	200	200 x 57	19
60 to 150	300	200 x 57	31
200 to 225	600	300 x 110	63

Over 250	800	300 x 115	88

TABLE II. COLOR CODE MARKING SIZES

Outside Diameter of Pipe Covering (Inches)	Length of Color Band (inches)	Arrow Length x Width (Inches)	Size of Legend Letters and Numerals (Inches)
Less than 1-1/2	8	8 x 2-1/4	1/2
1-1/2 to 2-3/8	8	8 x 2-1/4	3/4
2-1/2 to 7-7/8	12	8 x 2-1/4	1-1/4
8 to 10	24	12 x 4-1/2	2-1/2
Over 10	32	12 x 4-1/2	3-1/2

3.6 MISCELLANEOUS PAINTING

3.6.1 Lettering

Lettering shall be provided as scheduled on the drawings, shall be [block] [Gothic] type, and shall be [black enamel] [water-type decalcomania, finished with a protective coating of spar varnish]. Samples shall be approved before application.

3.6.2 Obstructions To Aviation

The following obstructions to aviation shall be painted in the pattern and color prescribed by FAA AC 70/7460-1: [_____]

3.7 SURFACES TO BE PAINTED

Surfaces listed in the painting schedules at the end of this section, other than those listed in paragraph SURFACES NOT TO BE PAINTED, shall be painted as scheduled.

3.8 SURFACES NOT TO BE PAINTED

Surfaces in the following areas shall not to be painted: [_____]. In addition, surfaces of hardware, fittings, and other factory finished items shall not be painted.

3.9 CLEANING

Cloths, cotton waste and other debris that might constitute a fire hazard shall be placed in closed metal containers and removed at the end of each day. Upon completion of the work, staging, scaffolding, and containers shall be removed from the site or destroyed in an approved manner. Paint and other deposits on adjacent surfaces shall be removed and the entire job left clean and acceptable.

3.10 PAINTING SCHEDULES

The following painting schedules identify the surfaces to be painted and prescribe the paint to be used and the number of coats of paint to be applied. Contractor options are indicated by ------or------ between optional systems or coats.

EXTERIOR PAINTING SCHEDULE

Surface	First Coat	Second Coat	Third Coat
Concrete masonry units.	Cement-emulsion filler	FS TT-E-2784 Type III	None
	CID A-A-1500	FS TT-E-2784 Type III	None
	FS TT-E-2784 Type III	FS TT-E-2784 Type III	None

NOTE: Cement-emulsion filler coat shall be acrylic-based and shall consist of the following ingredients in the proportion stated: white portland cement, ASTM C 150, Type I, 7.5 kg; 16.5 pounds; aggregate 15 kg; 33.5 pounds; mixing liquid, factory-prepared acrylic containing 46 to 47 percent solids, 3 liters; 0.75 gallon; potable water 4 liters 1.0 gallon maximum; exterior emulsion paint, FS TT-E-2784 Type III 4 liters. 1.0 gallon. Aggregate shall consist of Washed silica sand of the following gradation:

Weight)	U.S. Sieve Size	Percent Sand (by Passing Individual Sieve
	0.850 mm (20)	100
	0.600 mm (30)	95 - 100
	0.300 mm (50)	30 - 65
	0.150 mm (100)	0 - 10
	0.075 mm (200)	0 - 1

Concrete, unless otherwise	FS TT-E-2784 Type III	FS TT-E-2784 Type III specified.	None
Concrete: walls and bottom of	SSPC Paint 18 thin with 1 swimming pools.	SSPC Paint 18 part of approved	SSPC Paint 18
thinner to 4	parts of paint		by volume
Stucco.	FS TT-E-2784 Type III	FS TT-E-2784 Type III	None
	Primer as recommended by FS TT-C-555	FS TT-C-555 Type II	None

EXTERIOR PAINTING SCHEDULE

Surface	First Coat	Second Coat	Third Coat
Wood, unless otherwise specified.	CID A-A-2336	FS TT-E-2784 Type [_____]	FS TT-E-2784 Type [_____]
	FS TT-E-2784 Type III	FS TT-E-2784 Type [_____]	FS TT-E-2784 Type [_____]
Wood: Steps, platforms, floors, of open porches, [_____].	FS TT-E-2784 Type III	FS TT-E-2784 Type I	FS TT-E-2784 Type I
Wood: stain finish.	FS TT-S-708	None	None
	FS TT-S-001992 Class B	FS TT-S-001992 Class B	None
Hardboard: factory primed.	FS TT-E-2784 Type [_____]	FS TT-E-2784 Type [_____]	None
Ferrous metal unless otherwise specified	SSPC Paint 5	CID A-A-2962 Type I Class [_____] Grade C	CID A-A-2962 Type 1 Class [_____] Grade C
	SSPC Paint 25	CID A-A-2962 Type I Class [_____]	CID A-A-2962 Type 1 Class [_____]
Grade C	Grade C		
	SSPC Paint 23	FS TT-E-2784 Type [I] [II]	FS TT-E-2784 Type [I] [II]
Ferrous metal: subject	SSPC Paint 20 Type I to high temperature, up to 232 degrees C (450 degrees F), as follows: [_____].	None	None

EXTERIOR PAINTING SCHEDULE

Surface	First Coat	Second Coat	Third Coat

Ferrous metal: subject to high temperature, from 232 degrees C to 649 degrees C (450 degrees F to 1200 degrees F), as follows: [____].	FS TT-P-28	FS TT-P-28	None

NOTE: Commercial blast-cleaning, SSPC SP 6/NACE 3 required. No pretreatment. Maximum total system thickness: 0.102 mm.4 mil.

Galvanized metal.	FS TT-E-2784 Type III	FS TT-E-2784 Type [_____]	FS TT-E-2784 Type [_____]
Aluminum aluminum-alloy, and other non-ferrous metal (non-galvanized)	CID A-A-2867 FS TT-E-2784 Type III	CID A-A-2867 FS TT-E-2784 Type [_____]	None FS TT-E-2784 Type [_____]
	Aviation Obstructions		
Masonry & Concrete	FS TT-E-2784 Type III	FS TT-E-2784 Type I	None
	Aviation Obstructions		
Ferrous Metal	SSPC Paint 25	CID A-A-2962 Type I Class [_____]	CID A-A-2962 Type I Class [_____]
Grade C	Grade C		
	CID A-A-2867	CID A-A-2867	None
	SSPC Paint 23	FS TT-E-2784 Type I	FS TT-E-2784 Type I

INTERIOR PAINTING SCHEDULE

Surface	First Coat	Second Coat	Third Coat
Plaster, gypsum board, concrete, concrete units requiring a smooth finish, unless otherwise specified	CID A-A-2994 Type II	CID A-A-2246 or CID A-A-2247	CID A-A-2246 on gypsum board and faced with masonry recycled paper not required a smooth finish, CID A-A-2247 on gypsum board faced with recycled paper
gypsum board with		CID A-A-2248	CID A-A-2248 on faced recycled paper
Concrete masonry 2246 units requiring finish	CID A-A-1500	CID A-A-2994 Type II or CID A-A-2247 or CID A-A-2248	CID A-A- a smooth
Concrete: ceilings in TT-C-555 [_____].	Primer as recommended by manufacturer	FS TT-C-555 Type I	None following areas: FS
Concrete: floors requiring dust [_____].	CID A-A-2542 Type I	None reduction in following areas	None
Concrete masonry units in serving, restrooms and laundry areas, unless otherwise specified	CID A-A-1500	CID A-A-2994 Type II	FS TT-E-2784 food-preparation, food-
Plaster and gypsum board: in food-preparation food-serving restrooms and areas, unless otherwise specified.	CID A-A-2994 Type II	FS TT-E-2784 Type [_____]	FS TT-E-2784 Type [_____] on gypsum board faced with recycled paper laundry

Concrete masonry units: in,	CID A-A-1500	CID A-A-2994 Type II	FS TT-E-2784 Type [___]

shower areas, and areas requiring a high degree of sanitation, unless otherwise specified.

Plaster and gypsum board: in shower areas, and areas requiring a high recycled degree of paper sanitation, unless otherwise specified.	CID A-A-2994 Type II	FS TT-E-2784 Type [_____]	FS TT-E-2784 Type [_____] on gypsum board faced with
Concrete masonry units, plaster, and gypsum board: for walls in heavy traffic areas in space as follows:	CID A-A-1500	CID A-A-2994 Type II	CID A-A-2246 -----or----- CID A-A-2247
Hardboard. Type I	CID A-A-2994	CID A-A-2246	CID A-A-2246
		----------or----------	
		CID A-A-2247	CID A-A-2247
		----------or----------	
		CID A-A-2248	CID A-A-2248
Ferrous Metal unless otherwise specified	SSPC Paint 25	CID A-A-2962 Type I Class [_____] Grade C	CID A-A-2962 Type I Class [_____] Grade C
	SSPC Paint 23	FS TT-E-2784 Type [I] [II]	FS TT-E-2784 Type [I] [II]
	CID A-A-2867	CID A-A-2867	None
Aluminum and aluminum alloy unless otherwise specified.	CID A-A-2867	CID A-A-2867	None
	FS TT-E-2784 Type III	FS TT-E-2784 Type [I] [II]	FS TT-E-2784 Type [I] [II]
Ferrous metal in concealed damp spaces or in exposed areas having unpainted adjacent surfaces as follows: [_____]	CID A-A-1632	None	None

Ferrous metal factory-primed equipment.	Two coats of paint as recommended by the equipment manufacturer mechanical and electrical		None
Galvanized metal:	FS TT-E-2784 Type III	FS TT-E-2784 Type [_____]	None
	SSPC Paint 5	CID A-A-2962 Type I Class [_____] Grade C	CID A-A-2962 Type I Class [_____] Grade C
	SSPC Paint 25	CID A-A-2962 Type I Class [_____] Grade C	CID A-A-2962 Type I Class [_____] Grade C
	SSPC Paint 23	FS TT-E-2784 Type [_____]	FS TT-E-2784 Type [_____]
Wood: unless otherwise specified.	CID A-A-2994 Type I	CID A-A-2246 ----------or----------	None
		CID A-A-2247 ----------or----------	None
CID A-A-2248	None		
Wood: stain and varnish finishes as follows: [___]	Commercially available stain	CID A-A-1788 Type [_____] Class I In addition a fourth coat of CID A-A-1788 Type [_____] Class I	CID A-A-1788 Type [_____] Class I
	CID A-A-2339	CID A-A-2834 Type I Class [_____] In addition a fourth coat of CID A-A-2834 Type I Class [_____]	CID A-A-2834 Type I Class [_____]

Wood: floors to receive paint finish.	CID A-A-2994 Type I	FS TT-E-2784 Type [_____] Type I or II	FS TT-E-2784 Type [_____] Type I or II
Wood: floors, except gymnasium Class A spaces as follows. [_____]	FS TT-C-542 Type I, Class A	FS TT-C-542 Type I, floors, to receive stain or natural finish in	None
Wood: gymnasium Oleoresinousfloors. gymnasium finish.	CID A-A-2335	CID A-A-2335	type floor per MFMA-03
	FS TT-C-542 Type I, Class A	FS TT-C-542 Type I, Class A	None
Wood: handrails.	CID A-A-1788 Type [_____] Class [_____]	CID A-A-1788 Type [_____] Class [_____]	CID A-A-1788
	CID A-A-1546	CID A-A-1546	CID A-A-1546
Wood: natural finish as follows: [_____]	CID A-A-1546	CID A-A-1546	CID A-A-1546
Ferrous Metal:			
Convector enclosures, electrical conduit runs: metallic tubing uninsulated ducts and pipes, pipe hangers, louvers, grilles, and air outlets, in areas having painted adjacent surfaces.	SSPC Paint 23	None	None
Aluminum and Galvanized Surface Metal:			
Convector enclosures, electrical conduit runs metallic tubing uninsulated ducts and pipes, pipe hangers, louvers, grilles, and air outlets, in areas having painted adjacent surfaces.	FS TT-E-2784	CID A-A-2246 ----------or---------- CID A-A-2247 ----------or---------- CID A-A-2248	CID A-A-2246 ----------or---------- CID A-A-2247 ----------or---------- CID A-A-2248

Metal: surfaces subject to high F), as follows: [_____].	SSPC Paint 20 Type I temperature, up to 232 degrees C (450 degrees	None	None
Metal: surfaces subject to temperature from 232 degrees C to 649 degrees C (450 degrees F to 1200 degrees F), as follows: [_____].	FS TT-P-28	FS TT-P-28	None

NOTE: Commercial blast-cleaning, SSPC SP 6/NACE 3 or better required. No pretreatment. Maximum total dry film thickness: 0.102 mm.4 mil.

Facing of vapor barrier jackets finished cloth cover insulation on pipes, ducts, and equipment in following area. [_____]	Two coats of paint to match of presized or adjacent areas		None adhesive

-- End of Section --

SECTION TABLE OF CONTENTS

DIVISION 16 - ELECTRICAL

SECTION 16375

ELECTRICAL DISTRIBUTION SYSTEM, UNDERGROUND

PART 1 GENERAL

1.1 REFERENCES
1.2 GENERAL REQUIREMENTS
1.2.1 Terminology
1.2.2 Service Conditions
1.3 SUBMITTALS
1.4 DELIVERY, STORAGE, AND HANDLING
1.5 EXTRA MATERIALS

PART 2 PRODUCTS

2.1 STANDARD PRODUCT
2.2 NAMEPLATES
2.2.1 General
2.2.2 Liquid-Filled Transformer Nameplates
2.3 CORROSION PROTECTION
2.3.1 Aluminum Materials
2.3.2 Ferrous Metal Materials
2.3.2.1 Hardware
2.3.2.2 Equipment
2.3.3 Finishing
2.4 CABLES
2.4.1 Medium-Voltage Cables
2.4.1.1 General
2.4.1.2 Ratings
2.4.1.3 Conductor Material
2.4.1.4 Insulation
2.4.1.5 Shielding
2.4.1.6 Neutrals
2.4.1.7 Jackets
2.4.2 Low-Voltage Cables
2.4.2.1 Conductor Material
2.4.2.2 Insulation
2.4.2.3 Jackets
2.4.2.4 Direct Buried
2.4.2.5 In Duct
2.5 CABLE JOINTS, TERMINATIONS, AND CONNECTORS
2.5.1 Medium-Voltage Cable Joints
2.5.2 Medium-Voltage Separable Insulated Connectors
2.5.3 Low-Voltage Cable Splices

2.5.4 Terminations
2.5.4.1 Factory Preformed Type
2.5.4.2 Taped Terminations
2.6 CONDUIT AND DUCTS
2.6.1 Metallic Conduit
2.6.2 Nonmetallic Ducts
2.6.2.1 Bituminized Fiber Duct
2.6.2.2 Concrete Encased Ducts
2.6.2.3 Direct Burial
2.6.3 Conduit Sealing Compound
2.7 MANHOLES, HANDHOLES, AND PULLBOXES
2.8 POLES AND HARDWARE
2.9 TRANSFORMERS, SUBSTATIONS, AND SWITCHGEAR
2.9.1 Secondary Unit Substation
2.9.1.1 Incoming Section
2.9.1.2 Transformer Section
2.9.1.3 Integral Outgoing Section
2.9.1.4 Nonintegral (Cable Compartment) Outgoing Section
2.9.2 Pad-Mounted Transformers
2.9.2.1 High-Voltage Compartments
2.9.2.2 Load-Break Switch
2.9.2.3 Transformer Tank Sections
2.9.2.4 Low-Voltage Cable Compartments
2.9.2.5 Accessories
2.9.3 Busways
2.9.4 Pad-Mounted, Metal-Enclosed, Switchgear
2.9.4.1 Ratings at 60 Hz shall be:
2.9.4.2 Operators, Devices, and Controls
2.9.4.3 Enclosures
2.9.5 Pad-Mounted Sectionalizers
2.9.5.1 Ratings
2.9.5.2 Enclosures
2.9.6 Cable Terminating Cabinets
2.10 METERING AND PROTECTIVE DEVICES
2.10.1 Circuit Breakers, Low-Voltage
2.10.1.1 Low-Voltage Power Circuit Breakers
2.10.1.2 Molded-Case Circuit Breakers
2.10.2 Fuses, Medium-Voltage, Including Current-Limiting
2.10.2.1 Construction
2.10.2.2 Ratings
2.10.2.3 E-Rated, Current-Limiting Power Fuses
2.10.2.4 C-Rated, Current-Limiting Power Fuses
2.10.3 Fuses, Low-Voltage, Including Current-Limiting
2.10.3.1 Cartridge Fuses
2.10.3.2 Transformer Circuit Fuses
2.10.4 Instrument Transformers
2.10.4.1 General
2.10.4.2 Current Transformers
2.10.4.3 Current Transformers for Power Transformers
2.10.4.4 Current Transformers for Metal-Enclosed Switchgear

2.10.4.5 Current Transformers for Kwh and Demand Metering (Low-Voltage)
2.10.4.6 Voltage Transformers
2.10.5 Watthour Meters
2.10.6 Protective Relaying
2.10.6.1 General
2.10.6.2 Construction
2.10.6.3 Ratings
2.11 SURGE ARRESTERS
2.12 GROUNDING AND BONDING
2.12.1 Driven Ground Rods
2.12.2 Grounding Conductors
2.13 CONCRETE AND REINFORCEMENT
2.14 PADLOCKS
2.15 CABLE FIREPROOFING SYSTEMS
2.15.1 Fireproof Coating
2.15.2 Fireproofing Tape
2.15.3 Plastic Tape
2.16 LIQUID DIELECTRICS
2.17 FACTORY TESTS
2.18 FENCING
2.19 COORDINATED POWER SYSTEM PROTECTION
2.19.1 Scope of Analyses
2.19.2 Determination of Facts
2.19.3 Single Line Diagram
2.19.4 Fault Current Analysis
2.19.4.1 Method
2.19.4.2 Data
2.19.5 Coordination Study
2.19.6 Study Report

PART 3 EXECUTION

3.1 GENERAL INSTALLATION REQUIREMENTS
3.1.1 Conformance to Codes
3.1.2 Verification of Dimensions
3.1.3 Disposal of Liquid Dielectrics
3.2 CABLE AND BUSWAY INSTALLATION
3.2.1 Cable Installation Plan and Procedure
3.2.1.1 Cable Inspection
3.2.1.2 Duct Cleaning
3.2.1.3 Duct Lubrication
3.2.1.4 Cable Installation
3.2.1.5 Cable Installation Plan
3.2.2 Duct Line
3.2.3 Direct-Burial
3.2.3.1 Trenching
3.2.3.2 Cable Burial
3.2.3.3 Other Requirements
3.2.3.4 Medium-Voltage Cable Joints or Low-Voltage Cable Splices
3.2.3.5 Cable Markers

3.2.4 Insect and Rodent Damage
3.2.5 Electric Manholes
3.2.6 Busway Installation
3.3 CABLE JOINTS
3.4 FIREPROOFING
3.4.1 Tape Method
3.4.2 Sprayable Method
3.5 DUCT LINES
3.5.1 Requirements
3.5.2 Treatment
3.5.3 Concrete Encasement
3.5.4 Nonencased Direct-Burial
3.5.5 Installation of Couplings
3.5.5.1 Bituminized-Fiber Ducts
3.5.5.2 Plastic Duct
3.5.6 Duct Line Markers
3.6 MANHOLES, HANDHOLES, AND PULLBOXES
3.6.1 General
3.6.2 Electric Manholes
3.6.3 Communications Manholes
3.6.4 Handholes
3.6.5 Pullboxes
3.6.6 Ground Rods
3.7 PAD-MOUNTED EQUIPMENT INSTALLATION
3.7.1 Concrete Pads
3.7.1.1 Construction
3.7.1.2 Concrete and Reinforcement
3.7.1.3 Sealing
3.7.2 Padlocks
3.7.3 Fencing
3.8 CONNECTIONS BETWEEN AERIAL AND UNDERGROUND SYSTEMS
3.8.1 Pole Installation
3.9 CONNECTIONS TO BUILDINGS
3.10 GROUNDING
3.10.1 Grounding Electrodes
3.10.2 Grounding and Bonding Connections
3.10.3 Grounding and Bonding Conductors
3.10.4 Surge Arrester Grounding
3.10.5 Manhole, Handhole, or Concrete Pullbox Grounding
3.10.6 Metal Splice Case Grounding
3.10.7 Riser Pole Grounding
3.11 FIELD TESTING
3.11.1 General
3.11.2 Safety
3.11.3 Ground-Resistance Tests
3.11.4 Ground-Mat Connection Inspection
3.11.5 Medium-Voltage Cable Test
3.11.6 Low-Voltage Cable Test
3.11.7 Liquid-Filled Transformer Tests
3.11.8 Dry-Type Transformer Tests

3.11.9 Circuit Breaker Tests
3.11.10 Power Circuit Breaker Tests
3.11.11 Protective Relays
3.11.12 Pre-Energization Services
3.11.13 Operating Tests
3.12 MANUFACTURER'S FIELD SERVICE
3.12.1 Onsite Training
3.12.2 Installation Engineer
3.13 ACCEPTANCE

-- End of Section Table of Contents --

SECTION 16375

ELECTRICAL DISTRIBUTION SYSTEM, UNDERGROUND

PART 1 GENERAL

1.1 REFERENCES

The publications listed below form a part of this specification to the extent referenced. The publications are referred to in the text by basic designation only.

AMERICAN NATIONAL STANDARDS INSTITUTE (ANSI)

AMERICAN SOCIETY FOR TESTING AND MATERIALS (ASTM)

ASSOCIATION OF EDISON ILLUMINATING COMPANIES (AEIC)

FACTORY MUTUAL ENGINEERING AND RESEARCH (FM)

INSTITUTE OF ELECTRICAL AND ELECTRONICS ENGINEERS (IEEE)

NATIONAL ELECTRICAL MANUFACTURERS ASSOCIATION (NEMA)

NATIONAL FIRE PROTECTION ASSOCIATION (NFPA)

UDERWRITERS LABORATORIES (UL)

1.2 GENERAL REQUIREMENTS

1.2.1 Terminology

Terminology used in this specification is as defined in IEEE Std 100.

1.2.2 Service Conditions

Items provided under this section shall be specifically suitable for the following service conditions. Seismic details shall [conform to Sections 13080 SEISMIC PROTECTION FOR MISCELLANEOUS EQUIPMENT and 16070 SEISMIC PROTECTION FOR ELECTRICAL EQUIPMENT] [be as indicated].

a. Fungus Control [_____]

b. Altitude [_____] m feet

c. Ambient Temperature [_____] degrees C degrees F

d. Frequency [_____]

e. Ventilation [_____]

f. Seismic Parameters [_____]

g. Humidity Control [_____]

h. Corrosive Areas [_____]

i. [_____]

1.3 SUBMITTALS

Government approval is required for submittals with a "G" designation; submittals not having a "G" designation are for information only. When used, a designation following the "G" designation identifies the office that will review the submittal for the Government. The following shall be submitted in accordance with Section 01330 SUBMITTAL PROCEDURES:

SD-02 Shop Drawings

Electrical Distribution System; [_____], [_____]

Detail drawings consisting of equipment drawings, illustrations, schedules, instructions, diagrams manufacturers standard installation drawings and other information necessary to define the installation and enable the Government to check conformity with the requirements of the contract drawings.

If departures from the contract drawings are deemed necessary by the Contractor, complete details of such departures shall be included with the detail drawings. Approved departures shall be made at no additional cost to the Government.

Detail drawings shall show how components are assembled, function together and how they will be installed on the project.

Data and drawings for component parts of an item or system shall be coordinated and submitted as a unit. Data and drawings shall be coordinated and included in a single submission. Multiple submissions for the same equipment or system are not acceptable except where prior approval has been obtained from the Contracting Officer. In such cases, a list of data to be submitted later shall be included with the first submission. Detail drawings shall consist of the following:

a. Detail drawings showing physical arrangement, construction details, connections, finishes, materials used in fabrication, provisions for conduit or busway entrance, access requirements for installation and maintenance, physical size, electrical characteristics, foundation and support details, and equipment weight. Drawings shall be drawn to scale and/or dimensioned. All optional items shall be clearly identified as included or excluded.

b. Internal wiring diagrams of equipment showing wiring as actually provided for this project. External wiring connections shall be clearly identified.

Detail drawings shall as a minimum depict the installation of the following items:

a. Medium-voltage cables and accessories including cable installation plan.

b. Transformers.

c. Substations.

d. Switchgear.

e. Pad-mounted loadbreak switches.

f. Busways.

g. Surge arresters.

As-Built Drawings; [_____], [_____]

The as-built drawings shall be a record of the construction as installed. The drawings shall include the information shown on the contract drawings as well as deviations, modifications, and changes from the contract drawings, however minor. The as-built drawings shall be a full sized set of prints marked to reflect deviations, modifications, and changes. The as-built drawings shall be complete and show the location, size, dimensions, part identification, and other information. Additional sheets may be added. The as-built drawings shall be jointly inspected for accuracy and completeness by the Contractor's quality control representative and by the Contracting Officer prior to the submission of each monthly pay estimate. Upon completion of the

work, the Contractor shall provide three full sized sets of the marked prints to the Contracting Officer for approval. If upon review, the as-built drawings are found to contain errors and/or omissions, they will be returned to the Contractor for correction. The Contractor shall correct and return the as-built drawings to the Contracting Officer for approval within 10 calendar days from the time the drawings are returned to the Contractor.

SD-03 Product Data

Fault Current and Protective Devices Coordination Studies; G, [_____]

The study shall be submitted with protective device equipment submittals. No time extension or similar contract modifications will be granted for work arising out of the requirements for this study. Approval of protective devices proposed shall be based on recommendations of this study. The Government shall not be held responsible for any changes to equipment, device ratings, settings, or additional labor for installation of equipment or devices ordered and/or procured prior to approval of the study.

Manufacturer's Catalog Data; [_____], [_____]

Catalog cuts, brochures, circulars, specifications, product data, and printed information in sufficient detail and scope to verify compliance with the requirements of the contract documents.

Material, Equipment, and Fixture Lists; [_____], [_____]

A complete itemized listing of equipment and materials proposed for incorporation into the work. Each entry shall include an item number, the quantity of items proposed, and the name of the manufacturer of each such item.

Installation Procedures; [_____], [_____]

As a minimum, installation procedures for transformers, substations, switchgear, and medium-voltage cable terminations and splices.

Procedures shall include cable pulling plans, diagrams, instructions, and precautions required to install, adjust, calibrate, and test the devices and equipment.

SD-06 Test Reports

Factory Tests; [_____], [_____]

Certified factory test reports shall be submitted when the manufacturer performs routine factory tests, including tests required by standards listed in paragraph REFERENCES. Results of factory tests performed shall be certified by the manufacturer, or an approved testing laboratory, and submitted within 7 days

following successful completion of the tests. The manufacturer's pass-fail criteria for tests specified in paragraph FIELD TESTING shall be included.

Field Testing; [_____], [_____]

A proposed field test plan, [20] [30] [_____] days prior to testing the installed system. No field test shall be performed until the test plan is approved. The test plan shall consist of complete field test procedures including tests to be performed, test equipment required, and tolerance limits.

Test Reports; [_____], [_____]

[Six] [_____] copies of the information described below in 215.9 by 279.4 mm (8-1/2 by 11 inch) 8-1/2 by 11 inch binders having a minimum of three rings, including a separate section for each test. Sections shall be separated by heavy plastic dividers with tabs.

a. A list of equipment used, with calibration certifications.

b. A copy of measurements taken.

c. The dates of testing.

d. The equipment and values to be verified.

e. The condition specified for the test.

f. The test results, signed and dated.

g. A description of adjustments made.

Cable Installation Reports; [_____], [_____]

[Six] [_____] copies of the information described below in 215.9 by 279.4 mm (8-1/2 by 11 inch) 8-1/2 by 11 inch binders having a minimum of three rings from which material may readily be removed and replaced, including a separate section for each cable pull. Sections shall be separated by heavy plastic dividers with tabs, with all data sheets signed and dated by the person supervising the pull.

a. Site layout drawing with cable pulls numerically identified.

b. A list of equipment used, with calibration certifications. The manufacturer and quantity of lubricant used on pull.

c. The cable manufacturer and type of cable.

d. The dates of cable pulls, time of day, and ambient temperature.

e. The length of cable pull and calculated cable pulling tensions.

f. The actual cable pulling tensions encountered during pull.

SD-07 Certificates

Materials and Equipment; [_____], [_____]

Where materials or equipment are specified to conform to the standards of the Underwriters Laboratories (UL) or to be constructed or tested, or both, in accordance with the standards of the American National Standards Institute (ANSI), the Institute of Electrical and Electronics Engineers (IEEE), or the National Electrical Manufacturers Association (NEMA), the Contractor shall submit proof that the items provided conform to such requirements. The label of, or listing by, UL will be acceptable as evidence that the items conform. Either a certification or a published catalog specification data statement, to the effect that the item is in accordance with the referenced ANSI or IEEE standard, will be acceptable as evidence that the item conforms. A similar certification or published catalog specification data statement to the effect that the item is in accordance with the referenced NEMA standard, by a company listed as a member company of NEMA, will be acceptable as evidence that the item conforms. In lieu of such certification or published data, the Contractor may submit a certificate from a recognized testing agency equipped and competent to perform such services, stating that the items have been tested and that they conform to the requirements listed, including methods of testing of the specified agencies. Compliance with above-named requirements does not relieve the Contractor from compliance with any other requirements of the specifications.

Cable Splicer Qualification; [_____], [_____]

A certification that contains the names and the qualifications of people recommended to perform the splicing and termination of medium-voltage cables approved for installation under this contract. The certification shall indicate that any person recommended to perform actual splicing and terminations has been adequately trained in the proper techniques and have had at least three recent years of experience in splicing and terminating the same or similar types of cables approved for installation. In addition, any person recommended by the Contractor may be required to perform a practice splice and termination, in the presence of the Contracting Officer, before being approved as a qualified installer of medium-voltage cables. If that additional requirement is imposed, the Contractor shall provide short sections of the approved types of cables along with the approved type of splice and termination kits, and detailed manufacturer's

instruction for the proper splicing and termination of the approved cable types.

Cable Installer Qualifications; [_____], [_____]

The Contractor shall provide at least one onsite person in a supervisory position with a documentable level of competency and experience to supervise all cable pulling operations. A resume shall be provided showing the cable installers' experience in the last three years, including a list of references complete with points of contact, addresses and telephone numbers.

SD-10 Operation and Maintenance Data

Electrical Distribution System; [_____], [_____]

[Six] [_____] copies of operation and maintenance manuals, within [7] [_____] calendar days following the completion of tests and including assembly, installation, operation and maintenance instructions, spare parts data which provides supplier name, current cost, catalog order number, and a recommended list of spare parts to be stocked. Manuals shall also include data outlining detailed procedures for system startup and operation, and a troubleshooting guide which lists possible operational problems and corrective action to be taken. A brief description of all equipment, basic operating features, and routine maintenance requirements shall also be included. Documents shall be bound in a binder marked or identified on the spine and front cover. A table of contents page shall be included and marked with pertinent contract information and contents of the manual. Tabs shall be provided to separate different types of documents, such as catalog ordering information, drawings, instructions, and spare parts data. Index sheets shall be provided for each section of the manual when warranted by the quantity of documents included under separate tabs or dividers.

Three additional copies of the instructions manual shall be provided within 30 calendar days following the manuals.

1.4 DELIVERY, STORAGE, AND HANDLING

Devices and equipment shall be visually inspected by the Contractor when received and prior to acceptance from conveyance. Stored items shall be protected from the environment in accordance with the manufacturer's published instructions. Damaged items shall be replaced. Oil filled transformers and switches shall be stored in accordance with the manufacturer's requirements. Wood poles held in storage for more than 2 weeks shall be stored in accordance with ANSI O5.1. Handling of wood poles shall be in accordance with ANSI O5.1, except that pointed tools capable of producing indentations more than 25 mm 1 inch in depth shall not be used. Metal poles shall be handled and stored in accordance with the manufacturer's instructions.

1.5 EXTRA MATERIALS

One additional spare fuse or fuse element for each furnished fuse or fuse element shall be delivered to the contracting officer when the electrical system is accepted. Two complete sets of all special tools required for maintenance shall be provided, complete with a suitable tool box. Special tools are those that only the manufacturer provides, for special purposes (to access compartments, or operate, adjust, or maintain special parts).

PART 2 PRODUCTS

2.1 STANDARD PRODUCT

Material and equipment shall be the standard product of a manufacturer regularly engaged in the manufacture of the product and shall essentially duplicate items that have been in satisfactory use for at least 2 years prior to bid opening. Items of the same classification shall be identical including equipment, assemblies, parts, and components.

2.2 NAMEPLATES

2.2.1 General

Each major component of this specification shall have the manufacturer's name, address, type or style, model or serial number, and catalog number on a nameplate securely attached to the equipment. Nameplates shall be made of noncorrosive metal. Equipment containing liquid dielectrics shall have the type of dielectric on the nameplate. Sectionalizer switch nameplates shall have a schematic with all switch positions shown and labeled. As a minimum, nameplates shall be provided for transformers, circuit breakers, meters, switches, and switchgear.

2.2.2 Liquid-Filled Transformer Nameplates

Power transformers shall be provided with nameplate information in accordance with IEEE ANSI/IEEE C57.12.00. Nameplates shall indicate the number of liters gallons and composition of liquid-dielectric, and shall be permanently marked with a statement that the transformer dielectric to be supplied is non-polychlorinated biphenyl. If transformer nameplate is not so marked, the Contractor shall furnish manufacturer's certification for each transformer that the dielectric is non-PCB classified, with less than [50] [2] ppm PCB content in accordance with paragraph LIQUID DIELECTRICS. Certifications shall be related to serial numbers on transformer nameplates. Transformer dielectric exceeding the [50] [2] ppm PCB content or transformers without certification will be considered as PCB insulated and will not be accepted.

2.3 CORROSION PROTECTION

2.3.1 Aluminum Materials

[Aluminum shall not be used in contact with earth or concrete. Where aluminum conductors are connected to dissimilar metal, fittings conforming to UL 486B shall be used.] [Aluminum shall not be used.]

2.3.2 Ferrous Metal Materials

2.3.2.1 Hardware

Ferrous metal hardware shall be hot-dip galvanized in accordance with ASTM A 153/A 153M and ASTM A 123/A 123M.

2.3.2.2 Equipment

Equipment and component items, including but not limited to transformer stations and ferrous metal luminaries not hot-dip galvanized or porcelain enamel finished, shall be provided with corrosion-resistant finishes which shall withstand [120] [480] [_____] hours of exposure to the salt spray test specified in ASTM B 117 without loss of paint or release of adhesion of the paint primer coat to the metal surface in excess of 1.6 mm (1/16 inch) 1/16 inch from the test mark. The scribed test mark and test evaluation shall be in accordance with ASTM D 1654 with a rating of not less than 7 in accordance with TABLE 1, (procedure A). Cut edges or otherwise damaged surfaces of hot-dip galvanized sheet steel or mill galvanized sheet steel shall be coated with a zinc rich paint conforming to the manufacturer's standard.

2.3.3 Finishing

Painting required for surfaces not otherwise specified and finish painting

of items only primed at the factory shall be as specified in Section 09900 PAINTING, GENERAL.

2.4 CABLES

Cables shall be single conductor type unless otherwise indicated.

2.4.1 Medium-Voltage Cables

2.4.1.1 General

Cable construction shall be [Type MV, conforming to NFPA 70 and UL 1072] [concentric neutral underground distribution cable conforming to AEIC CS5 and NEMA WC 7] [metallic armored cables, consisting of three-conductor, multi-conductor cables, with insulation and shielding, as specified, using [a galvanized steel] [an aluminum] interlocked tape armor and thermoplastic jacket]. Cables shall be manufactured for use in [duct] [or] [direct burial] applications [as indicated].

2.4.1.2 Ratings

Cables shall be rated for a circuit voltage [of] [5 kV] [15 kV] [25 kV] [28 kV] [35 kV] [as indicated].

2.4.1.3 Conductor Material

Underground cables shall be [soft drawn copper complying with ASTM B 3 and ASTM B 8 for regular concentric and compressed stranding or ASTM B 496 for compact stranding] [aluminum alloy 1350, 3/4 hard minimum complying with ASTM B 609, ASTM B 609M and ASTM B 231 for regular concentric and compressed stranding or ASTM B 400 for compacted stranding].

2.4.1.4 Insulation

Cable insulation shall be [cross-linked thermosetting polyethylene (XLP) insulation conforming to the requirements of NEMA WC 7 and AEIC CS5] [ethylene-propylene-rubber (EPR) insulation conforming to the requirements of NEMA WC 8 and AEIC CS6] [_____]. A 133 percent insulation level shall be used on 5 kV, 15 kV and 25 kV rated cables.

2.4.1.5 Shielding

Cables rated for 2 kV and above shall have a semiconducting conductor shield, a semiconducting insulation shield, and an overall copper [tape] [wire] shield for each phase. The shield [tape] [wire] shall be sized to meet IEEE C2 requirements for a ground fault availability of [_____] amperes.

2.4.1.6 Neutrals

[Neutral conductors of shall be [copper] [aluminum]. employing the same insulation and jacket materials as phase conductors, except that a 600-volt insulation rating is acceptable.] [Concentric neutrals conductors shall be tinned copper, having a combined ampacity [equal to] [1/3 of] the phase conductor ampacity rating.]

2.4.1.7 Jackets

Cables shall be provided with a [PVC] [polyethylene] [_____] jacket. Direct buried cables shall be rated for direct burial.

2.4.2 Low-Voltage Cables

Cables shall be rated 600 volts and shall conform to the requirements of NFPA 70, and must be UL listed for the application or meet the applicable section of either ICEA or NEMA standards.

2.4.2.1 Conductor Material

Underground cables shall be [annealed copper complying with ASTM B 3 and ASTM B 8] [Type AA-8000 aluminum conductors complying with ASTM B 800 and ASTM B 801]. Intermixing of copper and aluminum conductors is not permitted.

2.4.2.2 Insulation

Insulation must be in accordance with NFPA 70, and must be UL listed for the application or meet the applicable sections of either ICEA, or NEMA standards.

2.4.2.3 Jackets

Multiconductor cables shall have an overall [PVC] [_____] outer jacket.

2.4.2.4 Direct Buried

Single and multi-conductor cables shall of a type identified for direct burial. Service entrance cables shall conform to UL 854 for Type USE service entrance cable.

2.4.2.5 In Duct

Cables shall be single-conductor cable, in accordance with NFPA 70. [Cables in factory-installed, coilable-plastic-duct assemblies shall conform to NEMA TC 5 or NEMA TC 7].

2.5 CABLE JOINTS, TERMINATIONS, AND CONNECTORS

2.5.1 Medium-Voltage Cable Joints

Medium-voltage cable joints shall comply with IEEE Std 404 and IEEE Std 592. Medium-voltage cable terminations shall comply with IEEE Std 48. Joints shall be the standard products of a manufacturer and shall be either of the factory preformed type or of the kit type containing tapes and other required parts. Joints shall have ratings not less than the ratings of the cables on which they are installed. Splice kits may be of the heat-shrinkable type for voltages up to 15 kV, of the premolded splice and connector type, the conventional taped type, or the resin pressure-filled overcast taped type for voltages up to 35 kV; except that for voltages of 7.5 kV or less a resin pressure-filled type utilizing a plastic-tape mold is acceptable. Joints used in manholes, handholes, vaults and pull boxes shall be certified by the manufacturer for waterproof, submersible applications.

2.5.2 Medium-Voltage Separable Insulated Connectors

Separable insulated connectors shall comply with IEEE Std 386 and IEEE Std 592 and shall be of suitable construction or standard splice kits shall be used. Separable insulated connectors are acceptable for voltages up to 35 kV. Connectors shall be of the loadbreak type as indicated, of suitable construction for the application and the type of cable connected, and shall include cable shield adaptors. Separable insulated connectors shall not be used as substitutes for conventional permanent splices. External clamping points and test points shall be provided.

2.5.3 Low-Voltage Cable Splices

Low-voltage cable splices and terminations shall be rated at not less than 600 Volts. Splices in conductors No. 10 AWG and smaller shall be made with an insulated, solderless, pressure type connector, conforming to the applicable requirements of UL 486A. Splices in conductors No. 8 AWG and larger shall be made with noninsulated, solderless, pressure type connector, conforming to the applicable requirements of UL 486A and UL 486B. Splices shall then be covered with an insulation and jacket material equivalent to

the conductor insulation and jacket. Splices below grade or in wet locations shall be sealed type conforming to ANSI C119.1 or shall be waterproofed by a sealant-filled, thick wall, heat shrinkable, thermosetting tubing or by pouring a thermosetting resin into a mold that surrounds the joined conductors.

2.5.4 Terminations

Terminations shall be in accordance with IEEE Std 48, Class 1 or Class 2; of the molded elastomer, wet-process porcelain, prestretched elastomer, heat-shrinkable elastomer, or taped type. Acceptable elastomers are track-resistant silicone rubber or track-resistant ethylene propylene compounds, such as ethylene propylene rubber or ethylene propylene diene monomer. Separable insulated connectors may be used for apparatus terminations, when such apparatus is provided with suitable bushings. Terminations shall be of the outdoor type, except that where installed inside outdoor equipment housings which are sealed against normal infiltration of moisture and outside air, indoor, Class 2 terminations are acceptable. Class 3 terminations are not acceptable. Terminations, where required, shall be provided with mounting brackets suitable for the intended installation and with grounding provisions for the cable shielding, metallic sheath, and armor.

2.5.4.1 Factory Preformed Type

Molded elastomer, wet-process porcelain, prestretched, and heat-shrinkable terminations shall utilize factory preformed components to the maximum extent practicable rather than tape build-up. Terminations shall have basic impulse levels as required for the system voltage level. [Leakage distances shall comply with wet withstand voltage test requirements of IEEE Std 48 for the next higher Basic Insulation Level (BIL) level.] [Anti-tracking tape shall be applied over exposed insulation of preformed molded elastomer terminations].

2.5.4.2 Taped Terminations

Taped terminations shall use standard termination kits providing terminal connectors, field-fabricated stress cones, and rain hoods. Terminations shall be at least [315][510][635][890 mm][1.2 m] [12-1/2] [20][25][35][46] inches long from the end of the tapered cable jacket to the start of the terminal connector, or not less than the kit manufacturer's recommendations, whichever is greater.

2.6 CONDUIT AND DUCTS

[Ducts shall be single, round-bore type, with wall thickness and fittings suitable for the application.] [Duct lines shall be concrete-encased, thin-wall type.] [Duct lines shall be nonencased direct-burial, thick-wall type.] [Duct lines shall be concrete-encased, thin-wall type for duct lines between manholes and for other medium-voltage lines.] [[Low-voltage lines] [or] [Communication lines] run elsewhere may be direct-burial,

thick-wall type.] [Where concrete encasement is not required, low-voltage circuits may utilize factory-installed cable in coilable plastic duct.]

2.6.1 Metallic Conduit

Intermediate metal conduit shall comply with UL 1242. Rigid galvanized steel conduit shall comply with UL 6 and ANSI C80.1. Metallic conduit fittings and outlets shall comply with UL 514A and NEMA FB 1.

2.6.2 Nonmetallic Ducts

2.6.2.1 Bituminized Fiber Duct

UL 1684 for [Type I (Thinwall)][Type II (Thickwall)].

2.6.2.2 Concrete Encased Ducts

UL 651 Schedule 40 or NEMA TC 6 Type EB.

2.6.2.3 Direct Burial

UL 651 [Schedule 40][and][Schedule 80][as indicated], or NEMA TC 6 Type DB.

2.6.3 Conduit Sealing Compound

Compounds for sealing ducts and conduit shall have a putty-like consistency workable with the hands at temperatures as low as 2 degrees C (35 degrees F), 35 degrees F, shall neither slump at a temperature of 150 degrees C (300 degrees F), 300 degrees F, nor harden materially when exposed to the air. Compounds shall adhere to clean surfaces of fiber or plastic ducts; metallic conduits or conduit coatings; concrete, masonry, or lead; any cable sheaths, jackets, covers, or insulation materials; and the common metals. Compounds shall form a seal without dissolving, noticeably changing characteristics, or removing any of the ingredients. Compounds shall have no injurious effect upon the hands of workmen or upon materials.

2.7 MANHOLES, HANDHOLES, AND PULLBOXES

Manholes, handholes, and pullboxes shall be as indicated. Strength of manholes, handholes, and pullboxes and their frames and covers shall conform to the requirements of IEEE C2. Precast-concrete manholes shall have the required strength established by ASTM C 478, ASTM C 478M. Frames and covers shall be made of gray cast iron and a machine-finished seat shall be provided to ensure a matching joint between frame and cover. Cast iron shall comply with ASTM A 48, Class 30B, minimum. Handholes for low voltage cables installed in parking lots, sidewalks, and turfed areas shall be fabricated from an aggregate consisting of sand and with continuous woven glass strands having an overall compressive strength of at least [69 MPa (10,000 psi)][_____] MPa ([_____] psi) [10,000] [_____] psi and a flexural strength of at least [34.5 MPa (5000 psi)][_____] MPa ([_____] psi).[5,000] [_____] psi. Pullbox and handhole covers in sidewalks, and turfed areas shall be of the same material as the box. Concrete pullboxes shall consist of precast reinforced concrete boxes, extensions, bases, and covers.

2.8 POLES AND HARDWARE

Poles and hardware shall be in accordance with Section 16370 ELECTRICAL DISTRIBUTION SYSTEM, AERIAL.

2.9 TRANSFORMERS, SUBSTATIONS, AND SWITCHGEAR

Transformers, substations, and switchgear shall be of the outdoor type having the ratings and arrangements indicated. Medium-voltage ratings of cable terminations shall be [5] [15] [25] [28] [35] kV between phases for 133 percent insulation level.

2.9.1 Secondary Unit Substation

Secondary unit substations shall comply with ANSI C37.121 and shall be of the [radial type] [radial type with an outgoing section mounted integrally on the transformer] [secondary-selective type] [distributed-network type] [spot-network type]. Substations shall be subassembled and coordinated by one manufacturer and shall be shipped in complete sections ready for connection at the site. Complete sections shall include incoming, transformer, and outgoing sections and, where practicable, shall be shipped as one unit.

2.9.1.1 Incoming Section

Metal-enclosed interrupter switchgear consisting of fused, [air-insulated] [vacuum-insulated] [SF6-insulated], interrupters in series with automatic, visible blade disconnects shall be provided for protection of incoming circuits. [SF6 gas shall conform to ASTM D 2472]. Metal-enclosed interrupter switchgear shall comply with IEEE ANSI/IEEE C37.30 for load-interrupter switches, NEMA SG 2 for power fuses, and shall be of the outdoor no-aisle type that meets or exceeds the requirements of applicable publications listed. Switch construction shall be of the manually-operated, "OPEN-CLOSED,"
[air-insulated][vacuum-insulated][SF6-insulated], load interrupter type equipped with a stored energy operator for quick-make quick-break to make operating speeds independent of manual switch operations. Where indicated, suitable bus or lug connections shall be provided to mount field-installed, slip-on, medium-voltage cable terminations for cable entering via conduit from below [and a flanged throat suitable for direct connection to the associated transformer] [and a bus throat suitable for connection to the associated metal-enclosed bus]. [Surge protection shall be provided in accordance with paragraph SURGE ARRESTERS.] [Switches shall be of the 2-position type, open-closed.] [Selector switches shall be of the single-compartment, 3-position type, Line 1 - Open - Line 2, consisting of an interrupter switch in series with a selector switch.] [Duplex switches shall be of the dual compartment type with 2 interrupter switches.]

a. Ratings. Fuse continuous current ratings shall be as indicated for the transformer for an incoming line unit and for the line tie unit. Unless otherwise indicated, fuses shall be of the current limiting type. Switch ratings at 60 Hz shall be:

Nominal
voltage. .....[_____].

Rated maximum
voltage. .....[_____].

Maximum symmetrical interrupting
capacity. .....[_____].

Maximum asymmetrical interrupting
capacity. .....[_____].

3-Second short time current carrying
capacity. .....[_____].

Rated continuous
current. .....[_____].

BIL. .....[_____]
.

b. Basic Requirements. The electrical devices listed below shall be rated for the application and voltage and current indicated. Unless otherwise noted, manufacturer's standard devices shall be provided and shall include the following:

(1) A switch-operating handle with provisions for locking in either the open or closed position.

(2) A switch mechanical position indicator.

(3) A heater continuously energized to prevent condensation over an ambient temperature range of [minus 29 degrees C (minus 20 degrees F)][minus [_____] degrees C (minus [_____] degrees F)] to [40 degrees C (104 degrees F)][[_____] degrees C ([_____] degrees
F)] [minus [20][_____] degrees F] to [[40][_____] degrees F] at 90% relative humidity and wired in series with a cabinet door-actuated switch, so the heater is de-energized when doors are open. High-temperature thermal protection shall be included.

(4) One-pole or 2-pole thermal-magnetic, molded-case circuit breakers suitable for the operating voltage for heater circuits.

(5) Safety devices as necessary to ensure that the load interrupter switch is in the open position whenever unit doors are in the open position.

(6) A key interlock if indicated.

(7) An interface terminal block wired for required exterior connections.

2.9.1.2 Transformer Section

Transformers shall have two separate windings per phase and shall be of the [mineral oil-insulated] [less-flammable, liquid-insulated] type with [high molecular-weight hydrocarbon] [or] [dimethyl silicone] liquid. Transformers shall be suitable for outdoor use. Liquid-insulated transformers shall comply with IEEE ANSI/IEEE C57.12.00, ANSI C57.12.13, and ANSI C57.12.27, and shall have two 2-1/2 percent full capacity taps above and two 2-1/2 percent full capacity taps below rated voltage. Transformers shall be of the sealed tank type construction with welded-on cover. High-voltage terminals shall be provided [in an air terminal chamber for incoming [top] [bottom] entry cables][for direct connection to the incoming line section] [as shown on the drawings]. Low-voltage terminals shall be provided [in an air terminal chamber for incoming [top] [bottom] entry cables] [for direct connection to the outgoing [switchgear section] [bus duct]] [as shown on the drawings]. Low-voltage terminals shall be [on the [left] [right]] [as shown on the drawings] when facing the front, accessory side of the transformer. [Transformers shall be equipped with forced air cooling equipment to give [_____] kVA capacity. The equipment shall include the necessary fans, conduit and wiring, motor starters, and top liquid thermometer for fan control.] [Provision shall be made for the future addition of forced air cooling equipment to give [_____] kVA capacity. The transformer bushings, leads, and other components shall be designed to carry the increased load. A top liquid thermometer for control of future fans shall be furnished. Provision for future mounting of fans, conduit, and terminal box shall be provided.] Transformer accessories and ratings at 60 Hz shall be as follows: Three-phase capacity, self-cooled.....[_____] kVA.

Three-phase capacity, (future) forced-cooled.....[___] kVA.

Impedance..[5.75 percent, standard] [[___] percent nonstandard].

Temperature rise.....[65 degrees C] [55/65 degrees C].

High-voltage winding.....[_____] volts.

High-voltage winding connection.....[_____].

Low-voltage winding.....[_____] volts.

Low-voltage winding connection.....[_____].

Accessories:

a. drain and filter connection.

b. filling and top filter press connection.

c. pressure-vacuum gauge.

d. dial type thermometer with alarm contacts.

e. magnetic liquid level indicator with high and low level alarm contacts.

f. pressure relief device with alarm contacts.

g. ground connection pad.

h. provision for jacking, lifting, and towing.

i. diagram and rating nameplate.

2.9.1.3 Integral Outgoing Section

Integral outgoing section shall be of the [busway throat compartment] [dead-front distribution panelboard/switchboard] [metal-enclosed switchgear] type. Each circuit breaker and auxiliary compartment shall have a suitable metal or laminated plastic nameplate with white cut letters at least 6.4 mm (1/4 inch) 1/4 inch high on contrasting backgrounds [identifying the breaker unit and/or circuit number] [as shown on the drawings].

a. Busway Throat Compartment Type: Outgoing section shall consist of an enclosure containing metering devices on the main secondary circuit and connections from transformer terminals to suitable busway throats provided for connections to busway installations entering [from above] [as shown]. Connection to porcelain bushings shall be made with flexible jumpers.

b. Dead-Front Distribution Panelboard/Switchboard Type: Outgoing section shall be of the panelboard/switchboard type mounted integrally with the transformer and shall consist of metering devices and main and branch circuit breakers mounted in panelboard/switchboard enclosures. Panelboards shall comply with NEMA PB 1. Switchboards shall comply with NEMA PB 2. Molded-case and low-voltage power circuit breakers shall comply with paragraph METERING AND PROTECTIVE DEVICES. Plug-in type circuit breakers are not acceptable. Directories to indicate loads served by each circuit shall be typed and mounted in holders provided on panelboard doors behind protective coverings.

c. Metal-Enclosed Switchgear Type: [Outgoing section shall be of the metal-enclosed drawout circuit breaker type, in accordance with IEEE ANSI/IEEE C37.20.1 and NEMA SG 5.] Low-voltage power circuit breakers shall comply with the requirements of paragraph METERING AND PROTECTIVE DEVICES.

d. Metering: The main secondary bus of each outgoing section assembly shall include a watthour demand meter with the necessary instrument transformers, and VT and CT test blocks. Metering shall be as specified in paragraph METERING AND PROTECTIVE DEVICES.

e. Ground Fault Protection: Ground fault protection shall be provided utilizing sensors of the zero-sequence type or by the residual connection of phase and neutral current sensors. Ground fault settings shall be [as shown] [as determined by the coordination study].

2.9.1.4 Nonintegral (Cable Compartment) Outgoing Section

A cable compartment shall be provided on the transformer for cable connections as shown. Clamp type terminations for cables entering from [below] [above] shall be provided for connection to the transformer bushings. Clamp type cable terminations, suitable for [copper] [aluminum] conductors, shall be provided [for the circuit sizes shown] [to match circuit breakers].

2.9.2 Pad-Mounted Transformers

Pad-mounted transformers shall comply with ANSI C57.12.26 and shall be of the [radial] [loop feed] type. Pad-mounted transformer stations shall be assembled and coordinated by one manufacturer and each transformer station shall be shipped as a complete unit so that field installation requirements are limited to mounting each unit on a concrete pad and connecting it to primary and secondary lines. Stainless steel pins and hinges shall be provided. Barriers shall be provided between high- and low-voltage compartments. High-voltage compartment doors shall be interlocked with low-voltage compartment doors to prevent access to any high-voltage section unless its associated low-voltage section door has first been opened. Compartments shall be sized to meet the specific dimensional requirements of ANSI C57.12.26. Pentahead locking bolts shall be provided with provisions for a padlock.

2.9.2.1 High-Voltage Compartments

The high-voltage compartment shall be dead-front construction. Primary switching and protective devices shall include loadbreak switching, [drawout, dry-well-mounted, current-limiting fuses] [oil-immersed, current-limiting, bayonet-type fuses] [oil-immersed, bayonet-type, overload fuse in series with a partial range current-limiting fuse], medium-voltage separable loadbreak connectors, universal bushing wells and inserts or integral one piece bushings and surge arresters. Fuses shall comply with the requirements of paragraph METERING AND PROTECTIVE DEVICES. The switch shall be mounted inside transformer tank with switch operating handle located in high-voltage compartment and equipped with metal loop for hook stick operation. Fuses shall be interlocked with switches so that fuses can be removed only when the associated switch is in the "OPEN" position. Adjacent to medium-voltage cable connections, a nameplate or equivalent stencilled inscription shall be provided inscribed "DO NOT OPEN CABLE CONNECTORS UNLESS SWITCH IS OPEN." Surge arresters shall be fully insulated and configured to terminate on [the same bushing as the primary cable by means of a loadbreak, feed-through bushing insert] [a second set of high voltage bushings].

2.9.2.2 Load-Break Switch

[Radial-feed oil-immersed type rated at [15] [_____] kV, [95] [_____] kV BIL, with a continuous current rating and load-break rating of [200] [_____] ampere, and a make-and-latch rating of 10,000 rms amperes symmetrical. Locate the switch handle in the high-voltage compartment.]

[Loop feed sectionalizer switches: Provide three, two-position, oil-immersed type switches to permit closed transition loop feed and sectionalizing. Each switch shall be rated at [15] [_____] kV, [95] [_____] kV BIL, with a continuous current rating and load-break rating of [200] [_____] amperes, and a make-and-latch rating of 10,000 rms amperes symmetrical. Locate the switch handle in the high-voltage compartment.] Operation of switches shall be as follows:

ARRANGEMENT #	DESCRIPTION OF SWITCH ARRANGEMENT	SWITCH POSITION LINE A SW OPEN	LINE A SW CLOSE	LINE B SW OPEN	LINE B SW CLOSE	XFMR SW OPEN	XFMR SW CLOSE
1	Line A connected to Line B and both lines connected to transformer		X		X		X
2	Transformer connected to Line A only		X	X			X
3	Transformer connected to Line B only	X			X		X
4	Transformer open and loop closed		X		X	X	
5	Transformer open and loop open	X		X		X	

2.9.2.3 Transformer Tank Sections

Transformers shall comply with IEEE ANSI/IEEE C57.12.00, ANSI C57.12.21, and ANSI C57.12.26 and shall be of the [mineral oil-insulated type] [less-flammable, liquid-insulated type with [high molecular-weight hydrocarbon] [or] [dimethyl silicone] liquid]. Transformers shall be suitable for outdoor use and shall have 2 separate windings per phase. Standard NEMA primary taps shall be provided. Where primary taps are not specified, 4, 2-1/2 percent rated kVA high-voltage taps shall be provided [2 above and 2 below] [below] rated, primary voltage. Operating handles for primary tap changers for de-energized operation shall be located within high-voltage compartments, externally to transformer tanks. Adjacent to the tap changer operating handle, a nameplate or equivalent stenciled inscription shall be

provided and inscribed "DO NOT OPERATE UNDER LOAD." Transformer ratings at 60 Hz shall be as follows:

Three-phase capacity.....[_____] kVA.

Impedance. ..... [_____].

Temperature Rise.....65 degrees C.

High-voltage winding.....[_____] volts.

High-voltage winding connections. ..... [_____].

Low-voltage winding.....[_____] volts.

Low-voltage winding connections. ..... [_____]

2.9.2.4 Low-Voltage Cable Compartments

Neutrals shall be provided with fully-insulated bushings. Clamp type cable terminations, suitable for [copper] [aluminum] conductors entering from below, shall be provided as necessary.

2.9.2.5 Accessories

High-voltage warning signs shall be permanently attached to each side of transformer stations. Voltage warning signs shall comply with IEEE C2. Copper-faced steel or stainless steel ground connection pads shall be provided in both the high- and low-voltage compartments. Dial-type thermometer, liquid-level gauge, and drain valve with built-in sampling device shall be provided for each transformer station. Insulated-bushing-type parking stands shall be provided adjacent to each separable load-break elbow to provide for cable isolation during sectionalizing operations.

2.9.3 Busways

Busways shall comply with NEMA BU 1 and UL 857 and shall be of the voltage, phase, and continuous current ratings indicated. Neutrals shall be [full size] [half size]. Busways shall have short-circuit ratings not less than the maximum short-circuit currents of associated transformers, assuming primary sources of infinite capacity. Busways shall be feeder-low-impedance type and of outdoor or indoor service construction as suitable to the location. Busways shall be complete with elbows, fittings, flanges, end-closures, tees, crosses, cable-tap boxes, accessories, and other devices required for the indicated installation, and shall be coordinated for connection to the indicated equipment. For wet/damp locations, bus duct shall be heated, nonventilated enclosure, nonsegregated phase type in accordance with IEEE ANSI/IEEE C37.23. Detail drawings for busway supports and bracing shall be submitted in accordance with the detail drawings portion of paragraph SUBMITTALS and shall indicate that busways are adequately supported for the seismic forces specified in paragraph GENERAL REQUIREMENTS (sub-paragraph Service Conditions).

2.9.4 Pad-Mounted, Metal-Enclosed, Switchgear

The switchgear shall be configured with [[2] [_____] incoming compartments for loop-feed arrangement] [one incoming compartment for radial-feed], equipped with [air-insulated, load-interrupter switches] [oil-insulated, load-interrupter switches] [SF6-insulated, load-interrupter switches], as indicated. The outgoing compartments shall be provided with [fused disconnects] [non-reclosing vacuum-type interrupters or circuit breakers], as indicated.

2.9.4.1 Ratings at 60 Hz shall be:

Nominal voltage (kV). ..... [_____].

Rated maximum voltage (kV). ..... [_____].

Rated continuous current (A). ..... [_____].

Maximum symmetrical interrupting capacity (kA). ..... [_____].

Maximum asymmetrical interrupting capacity (kA). ..... [_____].

Three-second short-time current-carrying capacity (kA). .... [_____].

BIL (kV). ..... [_____].

2.9.4.2 Operators, Devices, and Controls

Operators and controls shall be provided for the switchgear as follows:

a. Switches shall be provided with a manual, handle-type operator or a push-button mechanical spring tripping mechanism, utilizing a stored-energy (spring-driven) mechanism to simultaneously open or close all phases. The switchgear shall be configured so that the switch actuator is padlockable, but may be accessed without opening the switch compartment doors.

b. Fused disconnects shall be hook-stick operated.

c. Switches shall be provided with an automatic switch operator configured for local and remote opening and closing. An actuator charging motor shall be provide which operates at [12 V dc], [24 V dc] [120 V ac]. Switches shall be provided with remote telemetry units (RTUs) for remote operation and integration with supervisory, control, and data acquisition systems. Systems, components, and equipment shall conform to the requirements and recommendations of IEEE ANSI/IEEE C37.1.

d. Vacuum type interrupters shall be provided with an electronic controller for trip initiation. Manual trip initiation shall be provided by a push button or switch. Automatic trip shall be initiated by detection of excessive current. The electronic controller shall provide trip current selection capability according to present time-current response curves, as indicated.

Each interrupter shall be provided with a 3 phase, gang-operated handle mechanism for trip and reset.

2.9.4.3 Enclosures

Switchgear enclosures shall be of freestanding, self-supporting construction provided with separate incoming and outgoing compartments configured for bottom cable entry. Enclosures shall be of deadfront construction, provided with a hinged door for access to each compartment, and conform to the requirements of ANSI C57.12.28, ANSI C37.72, and IEEE ANSI/IEEE C37.20.3, Category A.

2.9.5 Pad-Mounted Sectionalizers

Pad-mounted, sectionalizing switches shall conform to the requirements of IEEE ANSI/IEEE C37.63. The switchgear shall be configured with [[2] [_____] incoming compartments for loop-feed arrangement] [one incoming compartment for radial-feed] equipped with [air-insulated, load-interrupter switches] [oil-insulated, load-interrupters switches] [SF6-insulated load-interrupter switches], as indicated. The outgoing compartments shall be provided with non-reclosing sectionalizers.

2.9.5.1 Ratings

Ratings at 60 Hz shall be:

Nominal voltage (kV). ..... [_____].

Rated maximum voltage (kV). ..... [_____].

Rated continuous current (A). ..... [_____].

Three-second short-time current-carrying capacity (kA). ..... [_____].

BIL (kV). ..... [_____].

2.9.5.2 Enclosures

Switchgear enclosures shall be of freestanding, self-supporting construction provided with separate incoming and outgoing compartments configured for bottom cable entry. Enclosures shall be of deadfront construction, provided with a hinged door for access to each compartment, and conform to the requirements of ANSI C57.12.28, ANSI C37.72, and IEEE ANSI/IEEE C37.20.3, Category A.

2.9.6 Cable Terminating Cabinets

Cable terminating cabinets shall be hook-stick operable, deadfront construction conforming to the requirements of IEEE ANSI/IEEE C37.20.3, Category A. Cabinets shall be provided with [with 200 A. loadbreak junctions and elbow-type separable loadbreak connectors, cable parking stands, and grounding lugs] [with 600 A. dead-break junctions and elbow-type separable dead-break connectors, cable parking stands, and grounding lugs]. The cable terminating equipments shall conform to IEEE Std 386.

Ratings at 60 Hz shall be:

Nominal voltage (kV). ..... [_____].

Rated maximum voltage (kV). ..... [_____].

Rated continuous current (A). ..... [_____].

Three-second short-time current-carrying capacity (kA). ..... [_____].

BIL (kV). ..... [_____].

2.10 METERING AND PROTECTIVE DEVICES

2.10.1 Circuit Breakers, Low-Voltage

2.10.1.1 Low-Voltage Power Circuit Breakers

a. Construction

Low-voltage power circuit breakers shall conform to IEEE ANSI/IEEE C37.13, ANSI C37.16, and NEMA SG 3 and shall be three-pole, single-throw, stored energy, [manually] [electrically] operated, with drawout mounting. Solid-state trip elements which require no external power connections shall be provided. Circuit breakers shall have an open/close contact indicator, primary disconnect devices, and a mechanical interlock to prevent making or breaking contact of primary disconnections when the circuit breaker is closed. Control voltage shall be [[24] [48] [125] V dc] [120 V ac] [as indicated]. The circuit breaker enclosure shall be suitable for its intended location.

b. Ratings

Voltage ratings shall be not less than the applicable circuit voltage. Circuit breakers shall be rated for 100 percent continuous duty and shall have trip current ratings and frame sizes as shown. Nominal voltage ratings, maximum continuous-current ratings, and maximum short-circuit interrupting ratings shall be in accordance with ANSI C37.16. Tripping features shall be as follows:

(1) Long-time current pick-up, adjustable from 50 percent to 100 percent of sensor current rating.

(2) Adjustable long-time delay.

(3) Short-time current pick-up, adjustable from 1.5 to 9 times long-time current setting.

(4) Adjustable short-time delay.

(5) [Short-time I2t switch.]

(6) Instantaneous current pick-up, adjustable from 1.5 to 9 times long-time current setting.

(7) Ground-fault pick-up, adjustable from 20 percent to 60 percent of sensor rating, but in no case greater than 1200 amperes. Sensing of ground-fault current at the main bonding jumper or ground strap shall not be permitted. [Zone-selective interlocking shall be provided as shown.]

(8) [Fixed] [Adjustable] ground-fault delay.

(9) [Ground-fault I2t switch.]

(10) [Overload] [and] [short-circuit] [and] [ground-fault] trip indicators shall be provided.

2.10.1.2 Molded-Case Circuit Breakers

NEMA AB 1 and UL 489.

2.10.2 Fuses, Medium-Voltage, Including Current-Limiting

2.10.2.1 Construction

Units shall be suitable for outdoor use. Fuses shall have integral blown-fuse indicators. All ratings shall be clearly visible.

2.10.2.2 Ratings

[Expulsion-type] [Current-limiting] power fuses shall have ratings in accordance with ANSI C37.46 and as follows:

Nominal voltage. ..... [_____].

Rated maximum voltage. ..... [_____].

Maximum symmetrical interrupting capacity. ..... [_____].

Rated continuous current. ..... [_____].

BIL. ..... [_____].

2.10.2.3 E-Rated, Current-Limiting Power Fuses

E-rated, current-limiting, power fuses shall conform to ANSI C37.46.

2.10.2.4 C-Rated, Current-Limiting Power Fuses

C-rated, current-limiting power fuses shall open in 1000 seconds at currents between 170 and 240 percent of the C rating.

2.10.3 Fuses, Low-Voltage, Including Current-Limiting

Low-voltage fuses shall conform to NEMA FU 1. Time delay and nontime delay options shall be as [shown] [specified]. Equipment provided under this contract shall be provided with a complete set of properly rated fuses when the equipment manufacturer utilizes fuses in the manufacture of the equipment, or if current-limiting fuses are required to be installed to limit the ampere-interrupting capacity of circuit breakers or equipment to

less than the maximum available fault current at the location of the equipment to be installed. Fuses shall have a voltage rating of not less than the phase-to-phase circuit voltage, and shall have the time-current characteristics required for effective power system coordination.

2.10.3.1 Cartridge Fuses

Cartridge fuses, current-limiting type, Class [G] [J] [K] [L] [RK1] [RK5] [RK9] [T] [CC] shall have tested interrupting capacity not less than [100,000] [200,000] amperes. Fuse holders shall be the type that will reject Class H fuses.

a. Class [G] [J] [L] [CC] fuses shall conform to UL 198C.

b. Class K fuses shall conform to UL 198D.

c. Class R fuses shall conform to UL 198E.

d. Class T fuses shall conform to UL 198H.

2.10.3.2 Transformer Circuit Fuses

Transformer circuit fuses shall be Class RK1 or RK5, current-limiting, time-delay with 200,000 amperes interrupting capacity.

2.10.4 Instrument Transformers

2.10.4.1 General

Instrument transformers shall comply with ANSI C12.11 and IEEE ANSI/IEEE C57.13. Instrument transformers shall be configured for mounting in/on the device to which they are applied. Polarity marks on instrument transformers shall be visually evident and shown on drawings.

2.10.4.2 Current Transformers

Unless otherwise indicated, bar, wound, or window-type transformers are acceptable; and except for window-type units installed over insulated buses, transformers shall have a BIL rating consistent with the rated BIL of the associated switchgear or electric power apparatus bushings, buses or conductors. Current transformers shall have the indicated ratios. The continuous thermal-current rating factor shall not be less than [1.0] [1.2] [1.5] [2.0] [3.0] [4.0]. Other thermal and mechanical ratings of current transformers and their primary leads shall be coordinated with the design of the circuit breaker and shall be not less than the momentary rating of the associated circuit breaker. Circuit protectors shall be provided across secondary leads of the current transformers to prevent the accident open-circuiting of the transformers while energized. Each terminal of each current transformer shall be connected to a short-circuiting terminal block in the circuit interrupting mechanism cabinet, power transformer terminal cabinet, and in the associated instrument and relay cabinets.

2.10.4.3 Current Transformers for Power Transformers

[Single-ratio] [Multi-ratio] bushing type current transformers shall be provided internally around power transformer bushings as shown. [Single-ratio units shall have a minimum relaying accuracy class of [0.6B-0.5] [0.3B-0.5].] [Multi-ratio units shall have a minimum relaying accuracy voltage class of [_____] for either a C or T classification.]

2.10.4.4 Current Transformers for Metal-Enclosed Switchgear

Single-ratio units, used for metering and relaying, shall have a metering accuracy class rating of [_____] [B._____]. Single-ratio units, used only for relaying, shall have a relaying accuracy class rating of [_____] for [either] a C [or T] classification.

2.10.4.5 Current Transformers for Kwh and Demand Metering (Low-Voltage)

Current transformers shall conform to IEEE ANSI/IEEE C57.13. Provide current transformers with a metering accuracy Class of 0.3 through [_____], with a minimum RF of [_____] at 30 degrees C, with 600-volt insulations, and 10 kV BIL. Provide butyl-molded, window-type current transformers mounted [on the transformer low-voltage bushings. Route current transformer leads in a location as remote as possible from the power transformer secondary cables to permit current measurements to be taken with hook-on-ammeters.] [in the current transformer cabinet.]

2.10.4.6 Voltage Transformers

Voltage transformers shall have indicated ratios. Units shall have an accuracy class rating of [_____]. Voltage transformers shall be of the drawout type having current-limiting fuses in both primary and secondary circuits. Mechanical interlocks shall prevent removal of fuses, unless the associated voltage transformer is in a drawout position. Voltage transformer compartments shall have hinged doors.

2.10.5 Watthour Meters

Watthour meters shall conform to ANSI C12.10, except numbered terminal wiring sequence and case size may be the manufacturer's standard. Watthour meters shall be of the [drawout switchboard type] [socket mounted [outdoor] [indoor] type] having a [15] [30] [60] [_____] minute, cumulative form, demand register meeting ANSI C12.4 and provided with not less than 2-1/2 stators. [Watthour demand meters shall have factory-installed electronic pulse initiators. Pulse initiators shall be solid-state devices incorporating light-emitting diodes, phototransistors, and power transistors, except that mercury-wetted output contacts are acceptable. Initiators shall be totally contained within watthour demand meter enclosures, shall be capable of operating up to speeds of 500 pulses per minute with no false pulses, and shall require no field adjustments. Initiators shall be calibrated for a pulse rate output of 1 pulse per 1/4 disc revolution of the associated meter and shall be compatible with the indicated equipment].

2.10.6 Protective Relaying

2.10.6.1 General

[Solid-state] [Microprocessor-based] protective relays shall be provided as shown and shall be of a type specifically designed for use on power switchgear or associated electric power apparatus. Protective relays shall conform to IEEE ANSI/IEEE C37.90. Relays and auxiliaries shall be suitable for operation with the instrument transformer ratios and connections provided.

2.10.6.2 Construction

Relays shall be dustproof and moisture resistant. Necessary test devices shall be incorporated within each relay and shall provide a means for testing either from an external source of electric power or from associated instrument transformers. Each relay shall be provided with an operation indicator and an external target reset device. Relays shall have necessary auxiliaries for proper operation. Relays and auxiliaries shall be suitable for operation with the instrument transformer ratios and connections provided.

2.10.6.3 Ratings

Relays shall be the manufacturer's standard items of equipment with appropriate ranges for time dial, tap, and other settings. Relay device numbers shall correspond to the function names and descriptions of IEEE ANSI/IEEE C37.2.

2.11 SURGE ARRESTERS

Surge arresters shall comply with NEMA LA 1, IEEE C62.1, IEEE C62.2, and IEEE C62.11 and shall be provided where indicated. Arresters shall be [station] [intermediate] [distribution] class, rated as shown. Arresters for use at elevations in excess of 1.8 km (6000 feet) 6000 feet above mean sea level shall be specifically rated for that purpose. Arresters shall be equipped with mounting brackets suitable for the indicated installations. Arresters shall be of the [valve] [or] [metal-oxide varistor] [or] [combination valve-metal-oxide varistor] type.

2.12 GROUNDING AND BONDING

2.12.1 Driven Ground Rods

Ground rods shall be [copper-clad steel conforming to UL 467] [zinc-coated steel conforming to ANSI C135.30] [solid stainless steel] not less than [15.9 mm (5/8 inch) 5/8 inch][19 mm (3/4 inch) 3/4 inch] in diameter by [3.1 m (10 feet) 10 feet][2.44 m (8 feet) 8 feet] in length. Sectional type rods may be used.

2.12.2 Grounding Conductors

Grounding conductors shall be bare, except where installed in conduit with associated phase conductors. Insulated conductors shall be of the same

material as phase conductors and green color-coded, except that conductors shall be rated no more than 600 volts. Bare conductors shall be ASTM B 8 soft-drawn unless otherwise indicated. Aluminum is not acceptable.

2.13 CONCRETE AND REINFORCEMENT

Concrete work shall have minimum 20 MPa 3000 psi compressive strength and conform to the requirements of Section 03300 CAST-IN-PLACE STRUCTURAL CONCRETE. Concrete reinforcing shall be as specified in Section 03200 CONCRETE REINFORCEMENT.

2.14 PADLOCKS

Padlocks shall comply with Section 08700 'Builders' Hardware

2.15 CABLE FIREPROOFING SYSTEMS

Cable fireproofing systems shall be listed in FM P7825a as a fire-protective coating or tape approved for grouped electrical conductors and shall be suitable for application on the type of medium-voltage cables provided. After being fully cured, materials shall be suitable for use where exposed to oil, water, gases, salt water, sewage, and fungus and shall not damage cable jackets or insulation. Asbestos materials are not acceptable.

2.15.1 Fireproof Coating

Cable fireproofing coatings shall be compounded of water-based thermoplastic resins, flame-retardant chemicals, and inorganic noncombustible fibers and shall be suitable for the application methods used. Coatings applied on bundled cables shall have a derating factor of less than 5 percent, and a dielectric strength of 95 volts per mil minimum after curing.

2.15.2 Fireproofing Tape

Fireproofing tape shall be at least 50 mm (2 inches) 2 inches wide and shall be a flexible, conformable, polymeric, elastomer tape designed specifically for fireproofing cables.

2.15.3 Plastic Tape

Preapplication plastic tape shall be pressure sensitive, 0.254 mm (10 mil) 10 mil thick, conforming to UL 510.

2.16 LIQUID DIELECTRICS

Liquid dielectrics for transformers, capacitors, reclosers, and other liquid-filled electrical equipment shall be non-polychlorinated biphenyl (PCB) mineral-oil or less-flammable liquid as specified. Nonflammable fluids shall not be used. Tetrachloroethylene (perchloroethylene) and 1, 2, 4 trichlorobenzene fluids shall not be used. Liquid dielectrics in retrofitted equipment shall be certified by the manufacturer as having less than [50] [2] parts per million (ppm) PCB content. In lieu of the

manufacturer's certification, the Contractor may submit a test sample of the dielectric in accordance with ASTM D 923 and have tests performed per ASTM D 4059 at a testing facility approved by the Contracting Officer. Equipment with test results indicating PCB level exceeding [50] [2] ppm shall be replaced.

2.17 FACTORY TESTS

Factory tests shall be performed, as follows, in accordance with the applicable publications and with other requirements of these specifications. The Contracting Officer shall be notified at least [10] [_____] days before the equipment is ready for testing. The Contracting Officer reserves the right to witness the tests.

a. Transformers: Manufacturer's standard [routine] [design] [and] [other] tests in accordance with IEEE ANSI/IEEE C57.12.00.

b. Transformers rated 200 kVA and above: Reduced full-wave, chopped-wave, and full-wave impulse test on each line and neutral terminal, in accordance with IEEE ANSI/IEEE C57.98.

c. High-Voltage Air Switches: Manufacturer's standard tests in accordance with IEEE ANSI/IEEE C37.34 and IEEE ANSI/IEEE C37.41.

d. Protective Relays: Seismic tests in accordance with IEEE ANSI/IEEE C37.98. Surge withstand tests in accordance with IEEE ANSI/IEEE C37.90.1.

e. Relaying Current Transformers: Manufacturer's standard tests in accordance with IEEE ANSI/IEEE C57.13.

f. Instrument Current Transformers: Manufacturer's standard tests in accordance with IEEE ANSI/IEEE C57.13.

g. Factory Preformed Terminations: Wet withstand voltage tests in accordance with IEEE Std 48 for the next higher BIL level.

h. Outdoor Switchgear: Manufacturer's standard tests in accordance with IEEE ANSI/IEEE C37.20.1, IEEE ANSI/IEEE C37.20.2, and IEEE ANSI/IEEE C37.20.3.

i. Electrical Power Insulators: Manufacturer's standard tests in accordance with ANSI C29.1.

j. [_____].

2.18 FENCING

Fencing shall conform to the requirements of Section 02821 CHAIN LINK FENCE.

2.19 COORDINATED POWER SYSTEM PROTECTION

Analyses shall be prepared to demonstrate that the equipment selected and system constructed meet the contract requirements for equipment ratings, coordination, and protection. They shall include a load flow analysis, a

fault current analysis, and a protective device coordination study. The studies shall be performed by a registered professional engineer with demonstrated experience in power system coordination in the last three years. The Contractor shall provide a list of references complete with points of contact, addresses and telephone numbers. The selection of the engineer is subject to the approval of the Contracting Officer.

2.19.1 Scope of Analyses

The fault current analysis, and protective device coordination study shall begin at: [the source bus and extend down to system bused where fault availability is 10,000 amperes (symmetrical) for building/facility 600 volt level distribution buses.] [the source bus and extended through the secondary side of transformers for medium voltage distribution feeders.] [the source bus and extend through [outgoing breakers] [outgoing medium voltage feeders, down to the individual protective devices for medium voltage radial taps] [outgoing medium voltage feeders, through the secondary side of transformers] [as indicated] for main electric supply substations.] [the nearest upstream device in the existing source system and extend through the downstream devices at the load end.]

2.19.2 Determination of Facts

The time-current characteristics, features, and nameplate data for each existing protective device shall be determined and documented. [The Contractor shall coordinate with the [commercial power company] [_____] for fault current availability at the site.] [The Contractor shall utilize the fault current availability indicated as a basis for fault current studies.]

2.19.3 Single Line Diagram

A single line diagram shall be prepared to show the electrical system buses, devices, transformation points, and all sources of fault current (including generator and motor contributions). A fault-impedance diagram or a computer analysis diagram may be provided. Each bus, device or transformation point shall have a unique identifier. If a fault-impedance diagram is provided, impedance data shall be shown. Locations of switches, breakers, and circuit interrupting devices shall be shown on the diagram together with available fault data, and the device interrupting rating.

2.19.4 Fault Current Analysis

2.19.4.1 Method

The fault current analysis shall be performed in accordance with methods described in IEEE Std 242, and IEEE Std 399.

2.19.4.2 Data

Actual data shall be utilized in fault calculations. Bus characteristics and transformer impedances shall be those proposed. Data shall be documented in the report.

2.19.5 Coordination Study

The study shall demonstrate that the maximum possible degree of selectively has been obtained between devices specified, consistent with protection of equipment and conductors from damage from overloads and fault conditions. The study shall include a description of the coordination of the protective devices in this project. Provide a written narrative that describes: which devices may operate in the event of a fault at each bus; the logic used to arrive at device ratings and settings; situations where system coordination is not achievable due to device limitations (an analysis of any device curves which overlap); coordination between upstream and downstream devices; and any relay settings. Recommendations to improve or enhance system reliability, and detail where such changes would involve additions or modifications to the contract and cost changes (addition or reduction) shall be provided. Composite coordination plots shall be provided on log-log graph paper.

2.19.6 Study Report

a. The report shall include a narrative describing: the analyses performed; the bases and methods used; and the desired method of coordinated protection of the power system.

b. The study shall include descriptive and technical data for existing devices and new protective devices proposed. The data shall include manufacturers published data, nameplate data, and definition of the fixed or adjustable features of the existing or new protective devices.

c. The report shall document [utility company data including system voltages, fault MVA, system X/R ratio, time-current characteristics curves, current transformer ratios, and relay device numbers and settings;] [and] [existing power system data including time-current characteristic curves and protective device ratings and settings.]

d. The report shall contain fully coordinated composite time-current characteristic curves for each bus in the system, as required to ensure coordinated power system protection between protective devices or equipment. The report shall include recommended ratings and settings of all protective devices in tabulated form.

e. The report shall provide the calculation performed for the analyses, including computer analysis programs utilized. The name of the software package, developer, and version number shall be provided.

PART 3 EXECUTION

3.1 GENERAL INSTALLATION REQUIREMENTS

Equipment and devices shall be installed and energized in accordance with the manufacturer's published instructions. Circuits installed aerially

shall conform to the requirements of Section 16370 ELECTRICAL DISTRIBUTION SYSTEM, AERIAL. Steel conduits installed underground shall be installed and protected from corrosion in conformance with the requirements of Section 16415 ELECTRICAL WORK, INTERIOR. Except as covered herein, excavation, trenching, and backfilling shall conform to the requirements of Section 02316 EXCAVATION, TRENCHING, AND BACKFILLING FOR UTILITIES SYSTEMS. Concrete work shall have minimum 20 MPa 3000 psi compressive strength and conform to the requirements of Section 03300 CAST-IN-PLACE STRUCTURAL CONCRETE.

3.1.1 Conformance to Codes

The installation shall comply with the requirements and recommendations of NFPA 70 and IEEE C2 as applicable.

3.1.2 Verification of Dimensions

The Contractor shall become familiar with details of the work, shall verify dimensions in the field, and shall advise the Contracting Officer of any discrepancy before performing any work.

3.1.3 Disposal of Liquid Dielectrics

PCB-contaminated dielectrics must be marked as PCB and transported to and incinerated by an approved EPA waste disposal facility. The Contractor shall furnish certification of proper disposal. Contaminated dielectrics shall not be diluted to lower the contamination level.

3.2 CABLE AND BUSWAY INSTALLATION

The Contractor shall obtain from the manufacturer an installation manual or set of instructions which addresses such aspects as cable construction, insulation type, cable diameter, bending radius, cable temperature, lubricants, coefficient of friction, conduit cleaning, storage procedures, moisture seals, testing for and purging moisture, etc. The Contractor shall then [prepare a checklist of significant requirements] [perform pulling calculations and prepare a pulling plan] which shall be submitted along with the manufacturers instructions in accordance with SUBMITTALS.

3.2.1 Cable Installation Plan and Procedure

Cable shall be installed strictly in accordance with the cable manufacturer's recommendations. Each circuit shall be identified by means of a fiber, laminated plastic, or non-ferrous metal tags, or approved equal, in each manhole, handhole, junction box, and each terminal. Each tag shall contain the following information; cable type, conductor size, circuit number, circuit voltage, cable destination and phase identification.

3.2.1.1 Cable Inspection

The cable reel shall be inspected for correct storage positions, signs of physical damage, and broken end seals. If end seal is broken, moisture shall be removed from cable in accordance with the cable manufacturer's recommendations.

3.2.1.2 Duct Cleaning

Duct shall be cleaned with an assembly that consists of a flexible mandrel (manufacturers standard product in lengths recommended for the specific size and type of duct) that is 6.4 mm (1/4 inch) 1/4 inch less than inside diameter of duct, 2 wire brushes, and a rag. The cleaning assembly shall be pulled through conduit a minimum of 2 times or until less than a volume of 131 cubic centimeters (8 cubic inches) 8 cubic inches of debris is expelled from the duct.

3.2.1.3 Duct Lubrication

The cable lubricant shall be compatible with the cable jacket for cable that is being installed. Application of lubricant shall be in accordance with lubricant manufacturer's recommendations.

3.2.1.4 Cable Installation

The Contractor shall provide a cable feeding truck and a cable pulling winch as required. The Contractor shall provide a pulling grip or pulling eye in accordance with cable manufacturer's recommendations. The pulling grip or pulling eye apparatus shall be attached to polypropylene or manilla rope followed by lubricant front end packs and then by power cables. A dynamometer shall be used to monitor pulling tension. Pulling tension shall not exceed cable manufacturer's recommendations. The Contractor shall not allow cables to cross over while cables are being fed into duct. For cable installation in cold weather, cables shall be kept at 10 degrees

C (50 degrees F) 50 degrees F temperature for at least 24 hours before installation.

3.2.1.5 Cable Installation Plan

The Contractor shall submit a cable installation plan for all cable pulls in accordance with the detail drawings portion of paragraph SUBMITTALS. Cable installation plan shall include:

a. Site layout drawing with cable pulls identified in numeric order of expected pulling sequence and direction of cable pull.

b. List of cable installation equipment.

c. Lubricant manufacturer's application instructions.

d. Procedure for resealing cable ends to prevent moisture from entering cable.

e. Cable pulling tension calculations of all cable pulls.

f. Cable percentage conduit fill.

g. Cable sidewall thrust pressure.

h. Cable minimum bend radius and minimum diameter of pulling wheels used.

i. Cable jam ratio.

j. Maximum allowable pulling tension on each different type and size of conductor.

k. Maximum allowable pulling tension on pulling device.

3.2.2 Duct Line

[Medium-voltage cables] [Low-voltage cables] [Cables] shall be installed in duct lines where indicated. [Cable splices in low-voltage cables shall be made in manholes and handholes only, except as otherwise noted.] [Cable joints in medium-voltage cables shall be made in manholes or approved pullboxes only.] Neutral and grounding conductors shall be installed in the same duct with their associated phase conductors.

3.2.3 Direct-Burial

[Medium-voltage cables] [Low-voltage cables] [Cables] shall be buried directly in the earth as indicated. Minimum cover from the top of a cable to finished grade shall be [_____] mm, [_____] inches, but not less than the depth of the frost line, [_____].

3.2.3.1 Trenching

Trenches for direct-burial cables shall be excavated to depths required to provide the minimum necessary cable cover. Bottoms of trenches shall be smooth and free of stones and sharp objects. Where bottoms of trenches comprise materials other than sand, a 75 mm 3 inch layer of sand shall be laid first and compacted to approximate densities of surrounding firm soil.

3.2.3.2 Cable Burial

Cables shall be unreeled along the sides of or in trenches and carefully placed on sand or earth bottoms. Pulling cables into direct-burial trenches from a fixed reel position will not be permitted, except as required to pull cables through conduits under paving or railroad tracks. Where cables cross, a separation of at least 75 mm 3 inches shall be provided, unless each cable circuit is protected by a nonmetallic conduit sleeve at the crossing. Where single-conductor cable is installed, all 3 phases and the neutral shall be installed in the same sleeve. Bend radius of any cable shall be not less than [8] [12] [_____] times the diameter of the cable. In no case shall cables be left under longitudinal tension. The first 150 mm 6 inch layer of backfill shall be of sand. Machine compaction shall not be used within 150 mm 6 inches of the cable.

3.2.3.3 Other Requirements

Where direct-burial cables cross under roads or other paving exceeding 1.5 m 5 feet in width, such cables shall be installed in concrete-encased ducts. Where direct-burial cables cross under railroad tracks, such cables shall be installed in reinforced concrete-encased ducts. Ducts shall extend at least 300 mm 1 foot beyond each edge of any paving and at least 1.5 m 5 feet beyond each side of any railroad tracks. Cables may be pulled into duct

from a fixed reel where suitable rollers are provided in the trench. Where direct burial cable transitions to duct-enclosed cable, direct-burial cables shall be centered in duct entrances, and a waterproof nonhardening mastic compound shall be used to facilitate such centering. If paving or railroad tracks are in place where cables are to be installed, coated rigid steel conduits driven under the paving or railroad tracks may be used in lieu of concrete-encased ducts. Damage to conduit coatings shall be prevented by providing ferrous pipe jackets or by predrilling. Where cuts are made in any paving, the paving and subbase shall be restored to their original condition.

3.2.3.4 Medium-Voltage Cable Joints or Low-Voltage Cable Splices

Cable joints or splices in direct-burial cables are not permitted in runs of 305 m 1000 feet or less, nor at intervals of less than 305 m 1000 feet in longer runs, except as required for taps. Locations of cable joints or splices in shorter intervals, where required to avoid obstructions or damage to cables, shall be approved. Cable joints or splices in direct burial installations shall be installed in above-ground junction boxes or in cast metal splice boxes suitable for direct burial use. Cable joints or splices in duct banks shall be made only in manholes, handholes, or pullboxes.

3.2.3.5 Cable Markers

Markers shall be located [as indicated] [near the ends of cable runs, at each cable joint or splice, at approximately every 150 m 500 feet along cable runs, and at changes in direction of cable runs]. In addition to markers, a 0.127 mm (5 mil), 5 mil, brightly colored plastic tape not less than 75 mm (3 inches) 3 inches in width and suitably inscribed at not more than 3 m (10 feet) 10 feet on centers, or other approved dig-in warning indication, shall be placed approximately 300 mm 12 inches below finished grade levels of trenches.

3.2.4 Insect and Rodent Damage

[Animal guards shall be installed as shown.] [Buried fiberglass pads shall be installed as shown.]

3.2.5 Electric Manholes

Cables shall be routed around the interior walls and securely supported from walls on cables racks. Cable routing shall minimize cable crossover, provide access space for maintenance and installation of additional cables, and maintain cable separation in accordance with IEEE C2.

3.2.6 Busway Installation

Busways penetrating walls shall have wall flanges installed on both surfaces of walls. Wall openings shall be approximately 6.4 mm 1/4 inch larger than the busway on each of the 4 busway sides, and openings shall be sealed with a suitable compound. Fire barriers shall be provided when penetrating fire rated walls. Fire barriers shall have a rating equal to

the fire wall rating. A weather barrier shall be used when a busway penetrates an exterior wall. Busways shall be supported at intervals not exceeding 3 m 10 feet and shall be braced to prevent lateral movement.

3.3 CABLE JOINTS

Medium-voltage cable joints shall be made by qualified cable splicers only. Qualifications of cable splicers shall be submitted in accordance with paragraph SUBMITTALS. Shields shall be applied as required to continue the shielding system through each entire cable joint. Shields may be integrally molded parts of preformed joints. Shields shall be grounded at each joint or in accordance with manufacturer's recommended practice. Cable joints shall provide insulation and jacket equivalent to that of the associated cable. Armored cable joints shall be enclosed in compound-filled, cast-iron or alloy, splice boxes equipped with stuffing boxes and armor clamps of a suitable type and size for the cable being installed.

3.4 FIREPROOFING

[Each medium-voltage cable and conductor in manholes shall be fire-proofed for their entire length within the manhole. Where cables and conductors have been lubricated to enhance pulling into ducts, the lubricant shall be removed from cables and conductors exposed in the manhole before fireproofing.] [Fire-stops shall be installed in each conduit entering or leaving a manhole.]

3.4.1 Tape Method

Before application of fireproofing tape, plastic tape wrapping shall be applied over exposed metallic items such as the cable ground wire, metallic outer covering, or armor to minimize the possibility of corrosion from the fireproofing materials and moisture. Before applying fireproofing tape, irregularities of cables, such as at cable joints, shall be evened out with insulation putty. A flexible conformable polymeric elastomer fireproof tape shall be wrapped tightly around each cable spirally in 1/2 lapped wrapping or in 2 butt-jointed wrappings with the second wrapping covering the joints of the first.

3.4.2 Sprayable Method

Manholes shall be power ventilated until coatings are dry and dewatered and the coatings are cured. Ventilation requirements shall be in accordance with the manufacturer's instruction, but not less than 10 air changes per hour shall be provided. Cable coatings shall be applied by spray, brush, or glove to a wet film thickness that reduces to the dry film thickness approved for fireproofing by FM P7825a. Application methods and necessary safety precautions shall be in accordance with the manufacturers instructions. After application, cable coatings shall be dry to the touch in 1 to 2 hours and fully cured in 48 hours, except where the manufacturer has stated that because of unusual humidity or temperature, longer periods may be necessary.

3.5 DUCT LINES

3.5.1 Requirements

Numbers and sizes of ducts shall be as indicated. Duct lines shall be laid with a minimum slope of 100 mm per 30 m. 4 inches per 100 feet. Depending on the contour of the finished grade, the high-point may be at a terminal, a manhole, a handhole, or between manholes or handholes. Short-radius manufactured 90-degree duct bends may be used only for pole or equipment risers, unless specifically indicated as acceptable. The minimum manufactured bend radius shall be 450 mm (18 inches) 18 inches for ducts of less than 80 mm (3 inch) 3 inch diameter, and 900 mm (36 inches) 36 inches for ducts 80 mm (3 inches) 3 inches or greater in diameter. Otherwise, long sweep bends having a minimum radius of 7.6 m 25 feet shall be used for a change of direction of more than 5 degrees, either horizontally or vertically. Both curved and straight sections may be used to form long sweep bends, but the maximum curve used shall be 30 degrees and manufactured bends shall be used. Ducts shall be provided with end bells whenever duct lines terminate in manholes or handholes.

3.5.2 Treatment

Ducts shall be kept clean of concrete, dirt, or foreign substances during construction. Field cuts requiring tapers shall be made with proper tools and match factory tapers. A coupling recommended by the duct manufacturer shall be used whenever an existing duct is connected to a duct of different material or shape. Ducts shall be stored to avoid warping and deterioration with ends sufficiently plugged to prevent entry of any water or solid substances. Ducts shall be thoroughly cleaned before being laid. Plastic ducts shall be stored on a flat surface and protected from the direct rays of the sun.

3.5.3 Concrete Encasement

Ducts requiring concrete encasements shall comply with NFPA 70, except that electrical duct bank configurations for ducts 150 mm (6 inches) 6 inches in diameter shall be determined by calculation and as shown on the drawings. The separation between adjacent electric power and communication ducts shall conform to IEEE C2. Duct line encasements shall be monolithic construction. Where a connection is made to a previously poured encasement, the new encasement shall be well bonded or doweled to the existing encasement. The Contractor shall submit proposed bonding method for approval in accordance with the detail drawing portion of paragraph SUBMITTALS. At any point, except railroad and airfield crossings, tops of concrete encasements shall be not less than the cover requirements listed in NFPA 70. At railroad and airfield crossings, duct lines shall be encased with concrete and reinforced as indicated to withstand specified surface loadings. Tops of concrete encasements shall be not less than 1.5 m 5 feet below tops of rails or airfield paving unless otherwise indicated. Where ducts are jacked under existing pavement, rigid steel conduit will be installed because of its strength. To protect the corrosion-resistant conduit coating, predrilling or installing conduit inside a larger iron pipe

sleeve (jack-and-sleeve) is required. For crossings of existing railroads and airfield pavements greater than 15 m 50 feet in length, the predrilling method or the jack-and-sleeve method will be used. Separators or spacing blocks shall be made of steel, concrete, plastic, or a combination of these materials placed not farther apart than 1.2 m 4 feet on centers. Ducts shall be securely anchored to prevent movement during the placement of concrete and joints shall be staggered at least 150 mm 6 inches vertically.

3.5.4 Nonencased Direct-Burial

Top of duct lines shall be below the frost line depth of [_____] mm, [_____] inches, but not less than [_____] mm [_____] inches below finished grade and shall be installed with a minimum of 75 mm 3 inches of earth around each duct, except that between adjacent electric power and communication ducts, 300 mm 12 inches of earth is required. Bottoms of trenches shall be graded toward manholes or handholes and shall be smooth and free of stones, soft spots, and sharp objects. Where bottoms of trenches comprise materials other than sand, a 75 mm 3 inch layer of sand shall be laid first and compacted to approximate densities of surrounding firm soil before installing ducts. Joints in adjacent tiers of duct shall be vertically staggered at least1 50 mm. 6 inches. The first 150 mm 6 inch layer of backfill cover shall be sand compacted as previously specified. The rest of the excavation shall be backfilled and compacted in 75 to 150 mm 3 to 6 inch layers. Duct banks may be held in alignment with earth. However, high-tiered banks shall use a wooden frame or equivalent form to hold ducts in alignment prior to backfilling.

3.5.5 Installation of Couplings

Joints in each type of duct shall be made up in accordance with the manufacturer's recommendations for the particular type of duct and coupling selected and as approved.

3.5.5.1 Bituminized-Fiber Ducts

Bituminized-fiber ducts shall be used to interface with existing bituminized-fiber duct as shown. To ensure a watertight joint, tapered ends or joints of the same material as the ducts shall be swabbed with bituminous or joint-sealing compound before couplings are applied. Plastic or nonmetallic couplings shall be tightly driven onto unswabbed ducts. Due to the brittleness of plastic couplings at low temperatures, such couplings shall not be installed when temperatures are below minus 18 degrees C (0 degrees F). 0 degrees F. Couplings shall be warmed in hot water or by another approved method when installed at temperatures below0 degrees C (32 degrees F). 32 degrees F.

3.5.5.2 Plastic Duct

Duct joints shall be made by brushing a plastic solvent cement on insides of plastic coupling fittings and on outsides of duct ends. Each duct and fitting shall then be slipped together with a quick 1/4-turn twist to set the joint tightly.

3.5.6 Duct Line Markers

Duct line markers shall be provided [as indicated] [at the ends of long duct line stubouts or for other ducts whose locations are indeterminate because of duct curvature or terminations at completely below-grade structures]. In addition to markers, a 0.127 mm (5 mil) 5 mil brightly colored plastic tape, not less than 75 mm (3 inches) 3 inches in width and suitably inscribed at not more than 3 m (10 feet) 10 feet on centers with a continuous metallic backing and a corrosion-resistant 0.0254 mm (1 mil) 1 mil metallic foil core to permit easy location of the duct line, shall be placed approximately 300 mm 12 inches below finished grade levels of such lines.

3.6 MANHOLES, HANDHOLES, AND PULLBOXES

3.6.1 General

Manholes shall be constructed approximately where shown. The exact location of each manhole shall be determined after careful consideration has been given to the location of other utilities, grading, and paving. The location of each manhole shall be approved by the Contracting Officer before construction of the manhole is started. Manholes shall be the type noted on the drawings and shall be constructed in accordance with the applicable details as indicated. Top, walls, and bottom shall consist of reinforced concrete. Walls and bottom shall be of monolithic concrete construction. The Contractor may at his option utilize monolithically constructed precast-concrete manholes having the required strength and inside dimensions as required by the drawings or specifications. In paved areas, frames and covers for manhole and handhole entrances in vehicular traffic areas shall be flush with the finished surface of the paving. In unpaved areas, the top of manhole covers shall be approximately 15 mm 1/2 inch above the finished grade. Where existing grades that are higher than finished grades are encountered, concrete assemblies designed for the purpose shall be installed to elevate temporarily the manhole cover to existing grade level. All duct lines entering manholes must be installed on compact soil or otherwise supported when entering a manhole to prevent shear stress on the duct at the point of entrance to the manhole. Duct lines entering cast-in-place concrete manholes shall be cast in-place with the manhole. Duct lines entering precast concrete manholes through a precast knockout penetration shall be grouted tight with a portland cement mortar. PVC duct lines entering precast manholes through a PVC endbell shall be solvent welded to the endbell. A cast metal grille-type sump frame and cover shall be installed over the manhole sump. A cable-pulling iron shall be installed in the wall opposite each duct line entrance.

3.6.2 Electric Manholes

Cables shall be securely supported from walls by hot-dip galvanized cable racks with a plastic coating over the galvanizing and equipped with adjustable hooks and insulators. The number of cable racks indicated shall be installed in each manhole and not less than 2 spare hooks shall be

installed on each cable rack. Insulators shall be made of high-glazed porcelain. Insulators will not be required on spare hooks.

3.6.3 Communications Manholes

The number of hot-dip galvanized cable racks with a plastic coating over the galvanizing indicated shall be installed in each telephone manhole. Each cable rack shall be provided with 2 cable hooks. Cables for the telephone and communication systems will be installed by others.

3.6.4 Handholes

Handholes shall be located approximately as shown. Handholes shall be of the type noted on the drawings and shall be constructed in accordance with the details shown.

3.6.5 Pullboxes

Pullbox tops shall be flush with sidewalks or curbs or placed 15 mm 1/2 inch above surrounding grades when remote from curbed roadways or sidewalks. Covers shall be marked "Low-Voltage" and provided with 2 lifting eyes and 2 hold-down bolts. Each box shall have a suitable opening for a ground rod. Conduit, cable, ground rod entrances, and unused openings shall be sealed with mortar.

3.6.6 Ground Rods

A ground rod shall be installed at the manholes, handholes and pullboxes. Ground rods shall be driven into the earth before the manhole floor is poured so that approximately 100 mm 4 inches of the ground rod will extend above the manhole floor. When precast concrete manholes are used, the top of the ground rod may be below the manhole floor and a No. 1/0 AWG ground conductor brought into the manhole through a watertight sleeve in the manhole wall.

3.7 PAD-MOUNTED EQUIPMENT INSTALLATION

Pad-mounted equipment, shall be installed on concrete pads in accordance with the manufacturer's published, standard installation drawings and procedures, except that they shall be modified to meet the requirements of this document. Units shall be installed so that they do not damage equipment or scratch painted or coated surfaces. After installation, surfaces shall be inspected and scratches touched up with a paint or coating provided by the manufacturer especially for this purpose. Three-phase transformers shall be installed with [_____] phase sequence. Primary taps shall be set at [_____].

3.7.1 Concrete Pads

3.7.1.1 Construction

Concrete pads for pad-mounted electrical equipment [may be either pre-fabricated or] [shall be] poured-in-place. Pads shall be constructed as indicated, except that exact pad dimensions and mounting details are

equipment specific and are the responsibility of the Contractor. Tops of concrete pads shall be level and shall project 100 mm 4 inches above finished [floor] [paving or grade] and sloped to drain. Edges of concrete pads shall have 20 mm 3/4 inch chamfer. Conduits for primary, secondary, and grounding conductors shall be set in place prior to placement of concrete pads. Where grounding electrode conductors are installed through concrete pads, PVC conduit sleeves shall be installed through the concrete to provide physical protection. To facilitate cable installation and termination, the concrete pad shall be provided with a rectangular hole below the primary and secondary compartments, sized in accordance with the manufacturer's recommended dimensions. Upon completion of equipment installation the rectangular hole shall be filled with masonry grout.

3.7.1.2 Concrete and Reinforcement

Concrete work shall have minimum 20 MPa 3000 psi compressive strength and comform to the requirements of Section 03300 CAST-IN-PLACE STRUCTURAL CONCRETE. Concrete pad reinforcement shall be in accordance with Section 03200 CONCRETE REINFORCEMENT.

3.7.1.3 Sealing

When the installation is complete, the Contractor shall seal all conduit and other entries into the equipment enclosure with an approved sealing compound. Seals shall be of sufficient strength and durability to protect all energized live parts of the equipment from rodents, insects, or other foreign matter.

3.7.2 Padlocks

Padlocks shall be provided for pad-mounted equipment and for each fence gate. Padlocks shall be keyed [alike] [as directed by the Contracting Officer].

3.7.3 Fencing

Fencing shall conform to the requirement of and be installed in accordance with Section 02821 CHAIN LINK FENCE. Fences shall provide working clearances for operation and maintenance in accordance with IEEE C2. The entire space between fences and concrete pads shall be excavated to a minimum depth of 100 mm 4 inches below finished gradelines, shall be graded to reasonably level surfaces, and filled with well-compacted clean coarse gravel or crushed stone of 15 to 40 mm (1/2 to 1-1/2 inches) 1/2 to 1-1/2 inches graded size up to finished gradelines. Space between fences and concrete pads shall be excavated to a minimum depth of 100 mm 4 inches below finished gradelines, shall be graded to reasonably level surfaces, and filled with well-compacted clean coarse gravel or crushed stone of 15 to 40 mm (1/2 to 1-1/2 inches) 1/2 to 1-1/2 inches graded size up to finished gradelines.

3.8 CONNECTIONS BETWEEN AERIAL AND UNDERGROUND SYSTEMS

Connections between aerial and underground systems shall be made as shown. Underground cables shall be extended up poles in [guards] [conduit] to cable terminations. Conduits shall be secured to the poles by 2-hole galvanized steel pipe straps spaced not more than 3 m 10 feet apart and with 1 strap not more than 300 mm 12 inches from any bend or termination. Cable guards shall be secured to poles in accordance with the manufacturer's published procedures. Conduits shall be equipped with bushings to protect cables and minimize water entry. Capnut potheads shall be used to terminate medium-voltage multiple-conductor cable. Cables shall be supported by devices separate from the conduit or guard, near their point of exit from the conduit or guard.

3.8.1 Pole Installation

Pole installation shall be in accordance with Section 16370 ELECTRICAL DISTRIBUTION SYSTEM, AERIAL.

3.9 CONNECTIONS TO BUILDINGS

Cables shall be extended into the various buildings as indicated, and shall be connected to the first applicable termination point in each building. Interfacing with building interior conduit systems shall be at conduit stubouts terminating 1.5 m 5 feet outside of a building and [600 mm] [_____] mm [2] [_____] feet below finished grade as specified and provided under Section 16415 ELECTRICAL WORK, INTERIOR. After installation of cables, conduits shall be sealed [with caulking compound] [_____] to prevent entrance of moisture or gases into buildings.

3.10 GROUNDING

A ground [mat] [ring] consisting of the indicated configuration of bare copper conductors and driven ground rods shall be installed [under] [around] pad-mounted equipment as shown. Equipment frames of metal-enclosed equipment, and other noncurrent-carrying metal parts, such as cable shields, cable sheaths and armor, and metallic conduit shall be grounded. At least 2 connections shall be provided from [a transformer,] [a switchgear ground bus,] [and] [a unit substation] to the ground mat. Metallic frames and covers of handholes and pull boxes shall be grounded by use of a braided, copper ground strap with equivalent ampacity of No. 6 AWG.

3.10.1 Grounding Electrodes

Grounding electrodes shall be installed as shown on the drawings and as follows:

a. Driven rod electrodes - Unless otherwise indicated, ground rods shall be driven into the earth until the tops of the rods are approximately 300 mm 1 foot below finished grade.

b. Ground mat - A ground mat shall be installed as shown consisting of bare copper conductors installed [300] [450] [600] mm, [12]

[18] [24] inches, plus or minus 75 mm, 3 inches, below the finished top of soil grade. Mat conductors shall be bonded to all rod electrodes, electrolytic electrodes, and to all other intersecting mat conductors. Mat conductors shall be sized as shown on the drawings.

c. Ground ring - A ground ring shall be installed as shown consisting of bare copper conductors installed [300] [450] [600] mm, [12] [18] [24] inches, plus or minus 75 mm, 3 inches, below finished top of soil grade. Ground ring conductors shall be [sized as shown] [No. 2 AWG, minimum].

d. Additional electrodes - When the required ground resistance is not met, additional electrodes shall be provided [interconnected with grounding conductors] [as indicated] to achieve the specified ground resistance. The additional electrodes will be [up to three, [2.4] [3] m ([8] [10] feet)[8] [10] feet rods spaced a minimum of
[3] [3.7] m [10] [12] feet apart] [a single extension-type rod, [15.9] [19.1] mm ([5/8] [3/4] inch) [5/8] [3/4] inch diameter, up to 9.1 m (30 feet) 30 feet long, [driven perpendicular to grade] [coupled and driven with the first rod]]. In high ground resistance, UL listed chemically charged ground rods may be used. If the resultant resistance exceeds 25 ohms measured not less than 48 hours after rainfall, the Contracting Officer shall be notified immediately.

3.10.2 Grounding and Bonding Connections

Connections above grade shall be made by the fusion-welding process or with bolted solderless connectors, in compliance with UL 467, and those below grade shall be made by a fusion-welding process. Where grounding conductors are connected to aluminum-composition conductors, specially treated or lined copper-to-aluminum connectors suitable for this purpose shall be used.

3.10.3 Grounding and Bonding Conductors

Grounding and bonding conductors include conductors used to bond transformer enclosures and equipment frames to the grounding electrode system. Grounding and bonding conductors shall be sized as shown, and located to provide maximum physical protection. Bends greater than 45 degrees in ground conductors are not permitted. Routing of ground conductors through concrete shall be avoided. When concrete penetration is necessary, nonmetallic conduit shall be cast flush with the points of concrete entrance and exit so as to provide an opening for the ground conductor, and the opening shall be sealed with a suitable compound after installation.

3.10.4 Surge Arrester Grounding

Surge arresters and neutrals shall be bonded directly to the transformer enclosure and then to the grounding electrode system with a bare copper conductor, sized as shown. Lead lengths shall be kept as short as practicable with no kinks or sharp bends.

3.10.5 Manhole, Handhole, or Concrete Pullbox Grounding

Ground rods installed in manholes, handholes, or concrete pullboxes shall be connected to cable racks, cable-pulling irons, the cable shielding, metallic sheath, and armor at each cable joint or splice by means of a No. 4 AWG braided tinned copper wire. Connections to metallic cable sheaths shall be by means of tinned terminals soldered to ground wires and to cable sheaths. Care shall be taken in soldering not to damage metallic cable sheaths or shields. Ground rods shall be protected with a double wrapping of pressure-sensitive plastic tape for a distance of 50 mm 2 inches above and 150 mm 6 inches below concrete penetrations. Grounding electrode conductors shall be neatly and firmly attached to manhole or handhole walls and the amount of exposed bare wire shall be held to a minimum.

3.10.6 Metal Splice Case Grounding

Metal splice cases for medium-voltage direct-burial cable shall be grounded by connection to a driven ground rod located within 600 mm 2 feet of each splice box using a grounding electrode conductor having a current-carrying capacity of at least 20 percent of the individual phase conductors in the associated splice box, but not less than No. 6 AWG.

3.10.7 Riser Pole Grounding

A single continuous vertical grounding electrode conductor shall be installed on each riser pole and connected directly to the grounding electrodes indicated on the drawings or required by these specifications. All equipment, neutrals, surge arresters, and items required to be grounded shall be connected directly to this vertical conductor. The grounding electrode conductor shall be sized as shown. Grounding electrode conductors shall be stapled to wood poles at intervals not exceeding 600 mm. 2 feet.

3.11 FIELD TESTING

3.11.1 General

Field testing shall be performed in the presence of the Contracting Officer. The Contractor shall notify the Contracting Officer [_____] days prior to conducting tests. The Contractor shall furnish all materials, labor, and equipment necessary to conduct field tests. The Contractor shall perform all tests and inspections recommended by the manufacturer unless specifically waived by the Contracting Officer. The Contractor shall maintain a written record of all tests which includes date, test performed, personnel involved, devices tested, serial number and name of test equipment, and test results. Field test reports shall be signed and dated by the Contractor.

3.11.2 Safety

The Contractor shall provide and use safety devices such as rubber gloves, protective barriers, and danger signs to protect and warn personnel in the test vicinity. The Contractor shall replace any devices or equipment which are damaged due to improper test procedures or handling.

3.11.3 Ground-Resistance Tests

The resistance of [each grounding electrode] [each grounding electrode system] [the ground mat] [the ground ring] shall be measured using the fall-of-potential method defined in IEEE Std 81. Ground resistance measurements shall be made before the electrical distribution system is energized and shall be made in normally dry conditions not less than 48 hours after the last rainfall. Resistance measurements of separate grounding electrode systems shall be made before the systems are bonded together below grade. The combined resistance of separate systems may be used to meet the required resistance, but the specified number of electrodes must still be provided.

a. Single rod electrode - [25] [_____] ohms.

b. Multiple rod electrodes - [_____] ohms.

c. Ground mat - [_____] ohms.

d. Ground ring - [_____] ohms.

3.11.4 Ground-Mat Connection Inspection

All below-grade ground-mat connections will be visually inspected by the Contracting Officer before backfilling. The Contractor shall notify the Contracting Officer [_____] hours before the site is ready for inspection.

3.11.5 Medium-Voltage Cable Test

After installation and before the operating test or connection to an existing system, the medium-voltage cable system shall be given a high potential test. Direct-current voltage shall be applied on each phase conductor of the system by connecting conductors as one terminal and connecting grounds or metallic shieldings or sheaths of the cable as the other terminal for each test. Prior to making the test, the cables shall be isolated by opening applicable protective devices and disconnecting equipment. The test shall be conducted with all splices, connectors, and terminations in place. The method, voltage, length of time, and other characteristics of the test for initial installation shall be in accordance with NEMA WC 7 or NEMA WC 8 for the particular type of cable installed, except that 28 kV and 35 kV insulation test voltages shall be in accordance with either AEIC CS5 or AEIC CS6 as applicable, and shall not exceed the recommendations of IEEE Std 404 for cable joints and IEEE Std 48 for cable terminations unless the cable and accessory manufacturers indicate higher voltages are acceptable for testing. Should any cable fail due to a weakness of conductor insulation or due to defects or injuries incidental

to the installation or because of improper installation of cable, cable joints, terminations, or other connections, the Contractor shall make necessary repairs or replace cables as directed. Repaired or replaced cables shall be retested.

3.11.6 Low-Voltage Cable Test

Low-voltage cable, complete with splices, shall be tested for insulation resistance after the cables are installed, in their final configuration, ready for connection to the equipment, and prior to energization. The test voltage shall be 500 volts dc, applied for one minute between each conductor and ground and between all possible combinations conductors in the same trench, duct, or cable, with all other conductors in the same trench, duct, or conduit. The minimum value of insulation shall be:

R in megohms = (rated voltage in kV + 1) x 304,800/(length of cable in meters)

R in megohms = (rated voltage in kV + 1) x 1000/(length of cable in feet

Each cable failing this test shall be repaired or replaced. The repaired cable shall be retested until failures have been eliminated.

3.11.7 Liquid-Filled Transformer Tests

The following field tests shall be performed on [all liquid-filled transformers] [liquid-filled transformers [_____] kVA and above]. Pass-fail criteria shall be in accordance with transformer manufacturer's specifications.

a. Insulation resistance test phase-to-ground.

b. Turns ratio test.

c. Correct phase sequence.

d. Correct operation of tap changer.

e. [_____]

3.11.8 Dry-Type Transformer Tests

The following field tests shall be performed on [all dry-type transformers] [dry-type transformer [_____] kVA and above]. Pass-fail criteria shall be in accordance with the transformer manufacturer's specifications.

a. Insulation resistance test phase-to-ground.

b. Turns ratio test.

c. [_____]

3.11.9 Circuit Breaker Tests

The following field tests shall be performed on circuit breakers. Pass-fail criteria shall be in accordance with the circuit breaker manufacturer's specifications.

a. Insulation resistance test phase-to-phase.

b. Insulation resistance test phase-to-ground.

c. Closed breaker contact resistance test.

d. Power factor test.

e. High-potential test.

f. [Manual] [and] [electrical] operation of the breaker.

3.11.10 Power Circuit Breaker Tests

The following power circuit breakers shall be tested in accordance with ANSI C37.50.

a. [_____].

b. [_____].

c. [_____].

3.11.11 Protective Relays

Protective relays shall be visually and mechanically inspected, adjusted, tested, and calibrated in accordance with the manufacturer's published instructions. Tests shall include pick-up, timing, contact action, restraint, and other aspects necessary to ensure proper calibration and operation. Relay settings shall be implemented in accordance with the coordination study. Relay contacts shall be manually or electrically operated to verify that the proper breakers and alarms initiate. Relaying current transformers shall be field tested in accordance with IEEE ANSI/IEEE C57.13.

3.11.12 Pre-Energization Services

Calibration, testing, adjustment, and placing into service of the installation shall be accomplished by a manufacturer's product field service engineer or independent testing company with a minimum of 2 years of current product experience. The following services shall be performed on the equipment listed below. These services shall be performed subsequent to testing but prior to the initial energization. The equipment shall be inspected to ensure that installation is in compliance with the recommendations of the manufacturer and as shown on the detail drawings. Terminations of conductors at major equipment shall be inspected to ensure the adequacy of connections. Bare and insulated conductors between such terminations shall be inspected to detect possible damage during installation. If factory tests were not performed on completed assemblies, tests shall be performed after the installation of completed assemblies.

Components shall be inspected for damage caused during installation or shipment to ensure packaging materials have been removed. Components capable of being both manually and electrically operated shall be operated manually prior to the first electrical operation. Components capable of being calibrated, adjusted, and tested shall be calibrated, adjusted, and tested in accordance with the instructions of the equipment manufacturer. Items for which such services shall be provided, but are not limited to, are the following:

a. Secondary unit substation

b. Pad-mounted transformers

c. Panelboards

d. Switchboards

e. Metal-enclosed switchgear

f. Busways

g. Switches

3.11.13 Operating Tests

After the installation is completed, and at such times as the Contracting Officer may direct, the Contractor shall conduct operating tests for approval. The equipment shall be demonstrated to operate in accordance with the requirements herein. An operating test report shall be submitted in accordance with paragraph SUBMITTALS.

3.12 MANUFACTURER'S FIELD SERVICE

3.12.1 Onsite Training

The Contractor shall conduct a training course for the operating staff as designated by the Contracting Officer. The training period shall consist of a total of [_____] hours of normal working time and shall start after the system is functionally completed but prior to final acceptance tests. The course instruction shall cover pertinent points involved in operating, starting, stopping, and servicing the equipment, as well as all major elements of the operation and maintenance manuals. Additionally, the course instructions shall demonstrate all routine maintenance operations. A [_____] [VHS] format video tape of the entire training session shall be submitted.

3.12.2 Installation Engineer

After delivery of the equipment, the Contractor shall furnish one or more field engineers, regularly employed by the equipment manufacturer to supervise the installation of the equipment, assist in the performance of the onsite tests, initial operation, and instruct personnel as to the operational and maintenance features of the equipment.

3.13 ACCEPTANCE

Final acceptance of the facility will not be given until the Contractor has successfully completed all tests and after all defects in installation, material or operation have been corrected.

-- End of Section --